2015-2016

MAGNETI MARELLI

checkstar SERVICE NETWORK

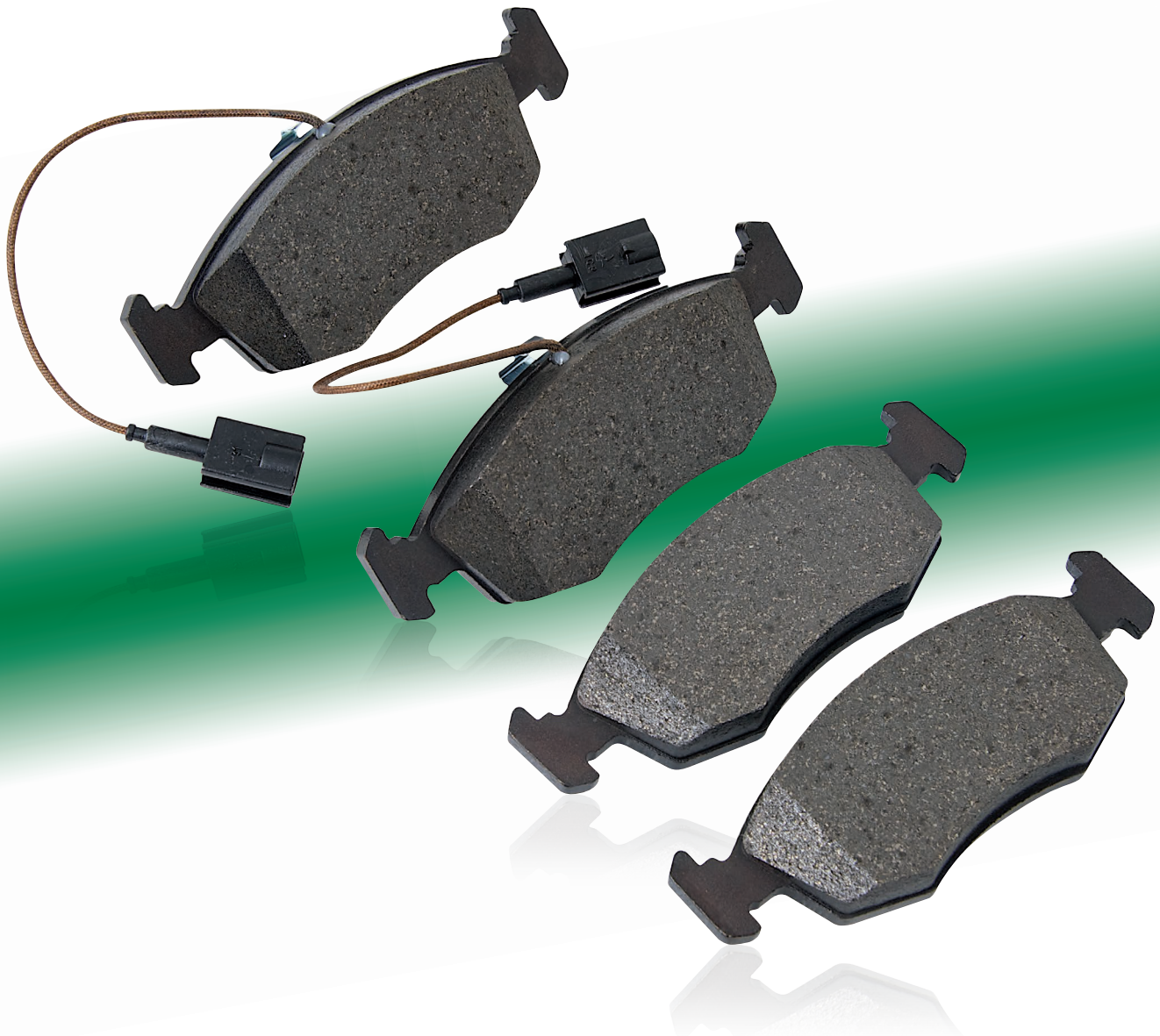

Pastiglie freno, Brake pads, Scheibenbremsbeläge, Plaquettes de freins, Pastillas de freno, Pastilhas de freio, Τακάκια φρένων, Klocki hamulcowe, Тормозные накладки, Fren balataları

Indice
Contents
Inhaltsverzeichnis
Sommaire
Índice
Índice
Περιεχόμενα
Spis treści
Содержание
İndeks

Indice costruttori
Manufacturers index
Herstellerverzeichnis
Sommaire par marques
Índice constructores
Índice de montadoras
Ευρετήριο κατασκευαστών
Indeks producentów
Индекс изготовителей
Üreticiler

3

Legenda
Legend
Legende
Légende
Leyenda
Legenda
Υπόμνημα
Legenda
Легенда
Semboller

6

Applicazione per marca e veicolo
Vehicle application guide
Zuordnung nach Marke und Fahrzeug
Affectations par marques et véhicules
Aplicación por marca y vehículo
Aplicação por marca e veículo
Εφαρμογή ανά μοντέλο
Zastosowanie dla marki i pojazdu
Применение по марке и модели
Marka ve araca göre uygulama

13

Applicazione per codice
Buyers guide
Zuordnung nach Bestellnummer
Affectations par références
Aplicación por referencia
Aplicação por código
Εφαρμογές ανά κωδικό
Zastosowanie dla kodu
Применение по коду
Koda göre uygulama

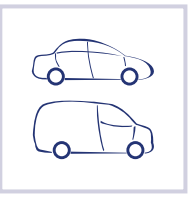

557

Optional Kit

733

Tavole di comparazione OE
OE cross reference guide
Gegenüberstellung OE
Table de correspondance OE
Tabla de equivalencias OE
Tabela de equivalências OE
Πίνακας αντιστοιχιών OE
Tabela porównawcza OE
Кросс-таблица с OE номерами
OE çapraz referans tablosu

O.E.

745

Tavole di comparazione IAM
IAM cross reference guide
Gegenüberstellung IAM
Table de correspondance IAM
Tabla de equivalencias IAM
Tabela de equivalências IAM
Πίνακας αντιστοιχιών IAM
Tabela porównawcza IAM
Кросс-таблица с IAM номерами
IAM çapraz referans tablosu

IAM

785

Tavole di comparazione WVA
WVA cross reference guide
Gegenüberstellung WVA
Table de correspondance WVA
Tabla de equivalencias WVA
Tabela de equivalências WVA
Πίνακας αντιστοιχιών WVA
Tabela porównawcza WVA
Кросс-таблица с WVA номерами
WVA çapraz referans tablosu

WVA

835

Indice costruttori
Manufacturers index
Herstellerverzeichnis
Sommaire par marques
Índice constructores
Índice de montadoras
Ευρετήριο κατασκευαστών
Indeks producentów
Индекс изготовителей
Üreticiler

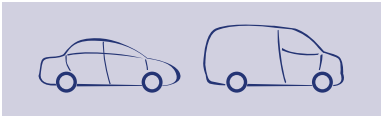

ABARTH 15

ALFA ROMEO 15

ASTON MARTIN 27

AUDI 27

AUTOBIANCHI 60

BEDFORD 61

BMW 61

CADILLAC 75

CHEVROLET (DAEWOO) 76

CHRYSLER 81

CITROËN 83

DACIA 103

DAEWOO (CHEVROLET) 106

DAIHATSU 107

DODGE 111

DR 113

FERRARI 113

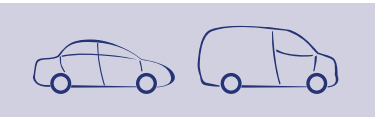

FIAT 113
FORD 145
GEO 171
HOLDEN 171
HONDA 171
HYUNDAI 178
INFINITI 190
INNOCENTI 190
ISUZU 191
IVECO 192
JAGUAR 195
JEEP 198
KIA 200
LANCIA 205
LAND ROVER 214
LEYLAND 215
LEXUS 215
LOTUS 216
MASERATI 216
MAZDA 216
MERCEDES-BENZ 224
MG 280
MINI (BMW) 280
MITSUBISHI 287
NISSAN 296

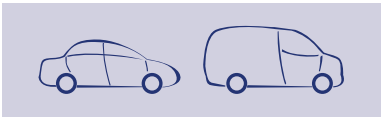

OPEL 304

PERODUA 340

PEUGEOT 340

PIAGGIO 364

PROTON 364

RENAULT 366

ROVER 404

SAAB 406

SEAT 411

SKODA 429

SMART (MCC) 446

SSANGYONG 448

SUBARU 448

SUZUKI 453

TATA (TELCO) 457

TOYOTA 457

VAUXHALL 475

VOLKSWAGEN 480

VOLVO 541

Legenda
Legend
Legende
Légende
Leyenda
Legenda
Υπόμνημα
Legenda
Легенда
Semboller



Costruttore e modello
Make and model
Hersteller und Modell
Marque et modèle
Constructor y modelo
Montadora e modelo
Μάρκα και μοντέλο
Marka i model
Производитель и модель
Üretici ve model



Anteriore
Front
Vorne
Avant
Delantero
Dianteiro
Εμπρός
Przednie
Передние
Ön



Anno di produzione
Manufacturing year
Baujahr
Année de production
Año de fabricación
Ano de fabricação
Ετος παραγωγς
Rok produkcji
Год производства
Üretim yılı

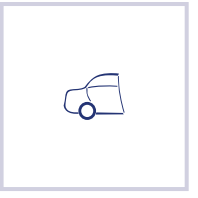

Posteriore
Rear
Hinten
Arrière
Trasero
Traseiro
Επίσω
Tylnie
Задние
Arka

Codici Magneti Marelli
Magneti Marelli references
Magneti Marelli Nr.
Références Magneti Marelli
Códigos Magneti Marelli
Códigos Magneti Marelli
Κωδικοί Magneti Marelli
Kody Magneti Marelli
Коды Магнети Марелли
Magneti Marelli kodları

O.E.

Codice costruttore
O.E. Reference
Herstellernummer
Référence Origine (OE)
Código constructor
Código de montadora
Κωδικός κατασκευαστή
Kod O.E.
Оригинальные номера
Üretici kodu



Informazioni tecniche
Technical information
Technische Informationen
Informations techniques
Información técnica
Informações técnicas
Τεχνικές πληροφορίες
Informacje techniczne
Техническая информация
Teknik bilgiler

(pinza post. in alluminio)

Pinza posteriore in alluminio
Aluminium rear caliper
Hinterer Bremssattel aus Aluminium
Etrier arrière en aluminium
Pinza posterior en aluminio
Pinça de travão posterior de alumínio
Πίσω Δαγκάνα Αλουμινίου
Aluminiowy zacisk tylny
Задний алюминиевый суппорт
Alüminyum arka kaliper

+ Rear Disc

Con disco posteriore
With rear disc
Mit hinterer Bremsscheibe
Avec disques à l'arrière
Con disco trasero
Com disco posterior
Πίσω δισκόφρενα
Z tarczą tylną
С задним диском
Arka diskli

+8 molle/ springs

+ 8 molle
+8 springs
+8 Federn
Avec 8 ressorts
+8 muelles
+ 8 molas
+ 8 ελατήτρια
+ 8 sprężyn
+8 пружин
8 yaylı

+8 molle/ springs/-ABS

+ 8 molle senza ABS
+8 springs without ABS
+8 Federn ohne ABS
Avec 8 ressorts, sans ABS
+8 muelles sin ABS
+ 8 molas sem ABS
+ 8 ελατήτρια χωρίς ABS
+ 8 sprężyn bez ABS
+8 пружин без АБС
8 yaylı, ABS'siz

3 hole brake disc

Sisco freno 3 fori
3 hole brake disc
3-Loch Bremsscheibe
Disque à 3 trous
Discos de freno 3 agujeros
Freio de disco com 3 furos
Δίσκος με 3 τρύπες
Tarcza hamulcowa 3-otworowa
Тормозной диск с 3 отверстиями
3 delikli fren diski

7 Posti

7 posti
7 seats
7 Sitzplätze
7 sièges
7 asientos
7 lugares
7θέσιο
Pojazd 7-osobowy
7 мест
7 koltuk

8 springs

8 molle
8 springs
8 Federn
8 ressorts
8 muelles
8 molas
8 ελατήρια
8 sprężyn
8 пружин
8 yay

Europa

Europa
Europe
Europa
Europe
Europa
Europa
Ευρώπη
Europa
Европа
Avrupa

no x Australia/ E.Arabi

Non per Australia ed Emirati Arabi
Not for Australia and Arab Emirates
Nicht für Australien und arabische Emirate
Sauf Australie et Emirats Arabes
No para Australia y Emiratos Arabes
Não para a Austrália e os Emirados Árabes
Εκτός Αυστραλίας/ΗΑΕ
Za wyjątkiem Australii i Emiratów Arabskich
Не для Австралии и ОАЭ
Avustralya ve Arap Emirlikleri için uygun değil.

Non per elevata portata utile	Non per elevata portata utile Not for increased payload Nicht für erhöhte Nutzlast Sauf Charge utile élevée No para carga útil elevada Não para elevada carga útil Ακατάλληλο για αυξημένο φορτίο Za wyjątkiem pojazdów o zwiększonej ładowności Не для увеличенных нагрузок Yüksek yük taşıma için uygun değil.
Passo corto 2423	Passo corto 2423 Short wheel-base 2423 Kurzer Radstand 2423 Empattement court 2423 Distancia corta entre ejes 2423 Curta distância entre eixos 2493 Κοντό μεταξόνιο 2423 Krótki rozstaw osi 2423 Короткая колесная база 2423 Kısa dingil aralığı 2423
Passo lungo 2593	Passo lungo 2593 Long wheel-base 2593 Langer Radstand 2593 Empattement long 2593 Distancia larga entre ejes 2593 Longa distância entre eixos 2593 Μακρύ μεταξόνιο 2593 Długi rozstaw osi 2593 Длинная колесная база 2593 Uzun dingil aralığı 2593
pinza post. in alluminio	Pinza post. in alluminio Aluminium rear caliper Hinterer Bremssattel aus Aluminium Etrier arrière en aluminium Pinza posterior en aluminio Pinça de travão post. de alumínio Πίσω Δαγκάνα Αλουμινίου Aluminiowy zacisk tylny Задний алюминиевый суппорт Alüminyum arka kaliper
pinze rosse-brake caliper red	Pinze rosse Brake caliper red Roter Bremssattel Etrier rouge Pinza de freno roja Pinças de travão vermelhas Κόκκινη Δαγκάνα Czerwony zacisk Тормозной суппорт красный Kırmızı fren kaliperi
+shim	Con antivibrante With shim Mit Zwischenblech Avec anti-bruit Con antivibrante Com antivibrador Με αντικραδασμική μεμβράνη Z podkładką antywibracyjną С прокладкой Takozlu
-shim	Senza antivibrante Without shim Ohne Zwischenblech Sans anti-bruit Sin antivibrante Sem antivibrador Χωρίς αντικραδασμική μεμβράνη Bez podkładki antywibracyjnej Без прокладки Takozsuz
Solid Disc	Disco Pieno Solid disc Massive Bremsscheibe Disque plein Disco sólido Disco cheio Απλός Δίσκος Tarcza lita Невентилируемый диск Solid disk
U.S.A./Canada/ Giappone	USA/Canada/Giappone USA/Canada/Japan USA/Canada/Japan USA / Canada / Japon USA/Canada/Japón EUA / Canadá / Japão ΗΠΑ/Καναδάς/Ιαπωνία USA/Kanada/Japonia США/Канада/Япония ABD/ Kanada/ Japonya
U.S.A./ Giappone	USA/Giappone USA/Japan USA/Japan USA / Japon USA/Japón EUA / Japão ΗΠΑ/Ιαπωνία USA/Japonia США/Япония ABD/ Japonya

Veicoli corazzati	Veicoli corazzati Armored vehicles Gepanzerte Fahrzeuge Véhicules blindés Vehículos blindados Veículos blindados Θωρακισμένα οχήματα Pojazdy opancerzone Бронированные машины Zırhlı araçlar

ADV	Advics
AK	Akebono
ATE	Teves
BSC	Bosch
BR	Brembo
CT	Citroën
BD	Bendix
DM	Delco Marine
KH	Kelsey Hayes
LK	Lockheed
LG	Lucas
MN	Mando
NI	Nissin
PT	Perrot
ST	Sumitomo
TOC	Tokico
TRW	Trw Lucas

Vented Disc	Disco ventilato Vented disc Belüftete Bremsscheibe Disque ventilé Disco ventilado Disco ventilado Αεριζόμενος δίσκος Tarcza wentylowana Вентилируемый диск Havalandırmalı disk

Magneti Marelli After Market Parts and Services S.p.A. ha curato con particolare attenzione la stesura del presente catalogo; declina comunque ogni responsabilità per eventuali errori od omissioni relativi a schemi, disegni, immagini, corrispondenze con i codici O.E. ecc. e si riserva il diritto di apportare modifiche al contenuto senza l'obbligo di darne preventiva comunicazione. Sono particolarmente graditi, da parte degli utenti, commenti, segnalazioni di inesattezze e qualsiasi altro suggerimento atto a rendere più efficace la prossima edizione del catalogo.

Magneti Marelli After Market Parts and Services S.p.A. has devoted its best attention to the editing of this catalogue; it nevertheless declines any responsibility for possible mistakes or omissions regarding figures, drawings, pictures, correspondence with O.E. codes etc. and it reserves the right to modify the contents without prior notice. Users' comments, reports of inaccuracies or any other suggestions which may in any way improve the next edition of this catalogue are warmly welcomed.

Magneti Marelli After Market Parts and Services S.p.A. hat diesen Katalog sorgfältig verfasst. Die Firma enthebt sich jeglicher Verantwortung für eventuelle Fehler oder Auslassungen hinsichtlich Schemen, Darstellungen,Bilder, Zeichnungen, Übereinstimmungen, mit O.E. Codes usw. und behält sich das Recht vor, ohne Ankündigung, am Inhalt Veränderungen vorzunehmen. Anmerkungen, Fehlerhinweisee und weitere Anregungen seitens der Kunden werden gerne entgegengenommen, um die nächste Ausgabe des Katalogs effizienter zu gestalten.

Magneti Marelli After Market Parts and Services S.p.A. a soigné avec une attention particulière la rédaction de ce catalogue; elle décline cependant toute responsabilité pour toute erreur ou omission éventuelle dans les schémas, les dessins, les images, les correspondances avec les codes O.E., etc. et se réserve le droit d'en modifier le contenu sans obligation de communication préalable. Les commentaires, les signalisations d'inexactitudes et toute autre suggestion des utilisateurs susceptibles de rendre la prochaine rédaction du catalogue plus efficace seront particulièrement appréciés.

Magneti Marelli After Market Parts and Services S.p.A. ha cuidado con especial atención la redacción del presente catálogo; de todas maneras declina toda responsabilidad por eventuales errores u omisiones relativos a esquemas, diseños, fotos, correspondencia con los códigos O.E., etc., y se reserva el derecho de aportar modificaciones al contenido sin la obligación de previo aviso. Se agradecen especialmente los comentarios, las indicaciones al contenido sin la obligación de previo aviso. Se agradecen especialmente los comentarios, las indicaciones de inexactitudes y cualquier otra sugerencia por parte de los usuarios que sean útiles para hacer más eficaz la próxima edición del catálogo.

A Magneti Marelli After Market Parts and Services S.p.A. cuidou com particular atenção a redação do presente catálogo; como quer que seja, rejeita qualquer responsabilidade face a eventuais erros o omissões relacionados aos esquemas, desenhos, imagens, correspondências aos códigos O.E. etc. e reserva-se o direito de introduzir alterações ao seu conteúdo sem a obrigação de comunicação prévia das mesmas. São particularmente bem aceitos, comentários, sinalizações de inexatidões e qualquer outra sugestão idônea a tornar mais eficaz a próxima edição do catálogo.

Η Magneti Marelli φροντισε με καθε λεπτομερεια την ορθοτητα των στοιχειων αυτου του καταλογου, δεν φερει ομως καμια ευθυνη για τυχον λαθη ή παραληψεις που σχετιζονται με σχηματα, σχεδια, εικόνες, αντιστοιχιες με γνησια νουμερα κτλ. και επιφυλασσεται του δικαιωματος να αλλαξει το περιεχομενο του καταλογου οποιαδηποτε στιγμη χωρις προτερη ενημερωση. Οποιαδηποτε σχολια η παρατηρησεις, με στοχο την βελτιωση του καταλογου, ειναι ευπροσδεκτα.

Firma Magneti Marelli After Market Parts and Services S.p.A dołożyła szczególnych starań przy opracowywaniu niniejszego katalogu. Nie ponosi ona jednak żadnej odpowiedzialności za ewentualne błędy lub braki dotyczące schematów, rysunków, zgodności z kodami O.E., itp. u. Firma Magneti Marelli After Market Parts and Services S.p.A zastrzega sobie prawo do wprowadzania zmian bez obowiązku uprzedniego powiadamiania o tym. Szczególnie mile widziane są komentarze i sygnały dotyczące nieprawidłowości oraz jakiekolwiek inne sugestie zgłaszane przez klientów, mające na celu udoskonalenie następnych edycji katalogu.

Magneti Marelli After Market Parts and Services S.p.A. уделила особое внимание созданию этого каталога. Но, несмотря на это, мы не несем ответственности за возможные ошибки или неточности в цифрах, изображениях или кросс-номерах. Также мы оставляем за собой право вносить любые изменения в содержание каталога без предварительного уведомления. Мы приветствуем любые ваши замечания и комментарии, которые обязательно учтем при подготовке следующих выпусков каталога.

Magneti Marelli After Market S.p.A. Parts and Services, mevcut katalogdaki yazıyı çok özenli bir şekilde hazırlamıştır; O.E. vs. şifrelerine karşılık gelen her türlü model ve tasarım ile ilgili olası eksiklikler ve hatalar ile ilgili sorumluluğunun altını çizer ve öncesinde haber verme zorunluluğu olmaksızın değişiklik yapma hakkını saklı tutar. Kullanıcı tarafından yorumların, eksikliklerin ve her türlü önerilerin belirtilmesi, bir sonraki katalog baskısını daha etkili hale getirecektir.

È vietata la riproduzione, anche parziale, del contenuto del presente catalogo senza preventiva autorizzazione scritta della Magneti Marelli After Market Parts and Services S.p.A, che tutelerà i propri diritti a termine di legge.

It is forbidden to reproduce, even partially, the contents of this catalogue without prior written consent from Magneti Marelli After Market Parts and Services S.p.A., who will protect its rights in accordance with the law.

Die Vervielfältigung, auch teilweise, des urheberrechtlich geschützten Inhalts des vorliegenden Katalogs ist ohne schriftliche Genehmigung durch Magneti Marelli After Market Parts and Services S.p.A. untersagt.

Il est interdit de reproduire même partiellement le contenu de ce catalogue sans autorisation écrite préalable de Magneti Marelli After Market Parts and Services S.p.A., qui protégera ses droits selon les termes de la loi.

Está prohibida la reproducción, total o parcial, del contenido del presente catálogo sin previa autorización escrita de Magneti Marelli After Market Parts and Services S.p.A, que protegerá sus propios derechos con arreglo a la ley.

É proibida a reprodução, também parcial, do conteúdo do presente catálogo sem a prévia autorização escrita de Magneti Marelli After Market Parts and Services S.p.A, que defenderá os próprios direitos, nos termos de lei.

Απαγορευται η αναπαραγωγη, ολικη η μερικη,του περιεχομενου του παροντος καταλογου χωρις την γραπτη εξουσιοδοτηση της Magneti Marelli After Market Parts and Services S.p.A.

Zabroniona jest nawet częściowa reprodukcja zawartości katalogu bez uprzedniej pisemnej autoryzacji ze strony firmy Magneti Marelli After Market Parts and Services S.p.A., która chroni swą własność zgodnie z przepisami prawa.

Запрещается полная или частичная перепечатка содержания каталога без предварительного письменного разрешения Magneti Marelli After Market Parts and Services S.p.A. Компания будет отстаивать свои интересы в соответствии с законом.

Tüm yasal hakların sahibi olan Magneti Marelli After Market Parts and Services S.p.A. 'in yazılı izni olmaksızın mevcut kataloğun kısmen de olsa çoğaltılması yasaktır.

La corrispondenza dovrà essere inviata a:
Correspondence should be sent to:
Der Briefverkehr ist zu senden an:
Envoyer la correspondance à:
La correspondencia debe ser enviada a:
La correspondência deverá ser enviada a:
Η αλληλογραφια θα πρεπει να αποστελεται:
Korespondencję należy przesyłać na adres:
Соответствующую корреспонденцию просим присылать по адресу:
Ticari yazışmalar şu adrese gönderilmelidir:

MAGNETI MARELLI AFTER MARKET
PARTS AND SERVICES S.p.A.
Viale Aldo Borletti, 61/63
20011 Corbetta (Milano) Italia
Tel. +39 02 92815111
Fax +39 02 97227234

Applicazione per marca e veicolo
Vehicle application guide
Zuordnung nach Marke und Fahrzeug
Affectations par marques et véhicules
Aplicación por marca y vehículo
Aplicação por marca e veículo
Εφαρμογή ανά μοντέλο
Zastosowanie dla marki i pojazdu
Применение по марке и модели
Marka ve araca göre uygulama

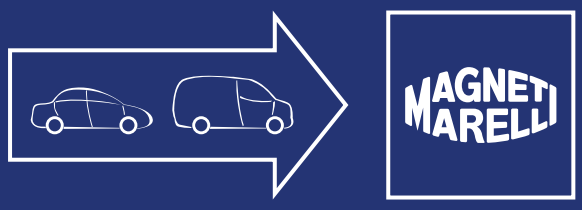

		KW	CV													
				SiS	i	W.i.	MAGNETI MARELLI	W×H×Th (mm)	Extra kit [Opt]	SiS	i	W.i.	MAGNETI MARELLI	W×H×Th (mm)	Extra kit [Opt]
ABARTH															
500															
1.4 16V	08/08→	99	135	BSC		[+]	**PF0214**	137×57,3×19	OK033/ OK038	LG		[-]	**PF0216**	95,8×43,9×13,7	OK039
1.4 16V	08/08→	99	135	BSC		[+]	**PF0214**	137×57,3×19	OK033/ OK038	LG		[+]	**PF0503**	95,8×43,9×13,7	OK039
1.4 16V	08/08→	103	140	BR	+2 w.i.	[+]	**PF0591**	124,7×70,7×15,1		LG		[+]	**PF0503**	95,8×43,9×13,7	OK039
1.4 16V	08/08→	118	160	BR	+2 w.i.	[+]	**PF0591**	124,7×70,7×15,1		LG		[+]	**PF0503**	95,8×43,9×13,7	OK039
1.4 16V	08/08→	132	180	BR	+2 w.i.	[+]	**PF0591**	124,7×70,7×15,1		LG		[+]	**PF0503**	95,8×43,9×13,7	OK039
1.4 16V Assetto Corse	08/08→	140	190	BR	+2 w.i.	[+]	**PF0591**	124,7×70,7×15,1		LG		[+]	**PF0503**	95,8×43,9×13,7	OK039
500C															
1.4 16V	09→	103	140	BSC		[+]	**PF0214**	137×57,3×19	OK033/ OK038	LG		[-]	**PF0216**	95,8×43,9×13,7	OK039
1.4 16V	05/11→	118	160	BSC		[+]	**PF0214**	137×57,3×19	OK033/ OK038	LG		[-]	**PF0216**	95,8×43,9×13,7	OK039
1.4 16V	06/11→	118	160	BSC		[+]	**PF0214**	137×57,3×19	OK033/ OK038	LG		[+]	**PF0503**	95,8×43,9×13,7	OK039
Grande Punto (199)															
1.4 MP T.	07→	114	155	BR		[+]	**PF0127**	124,7×70,7×15,1		BSC		[-]	**PF0230**	102×47,1×17,2	OK033/ OK040
1.4 MP T.	07→	132	180	BR	+2 w.i.	[+]	**PF0591**	124,7×70,7×15,1		BSC		[-]	**PF0230**	102×47,1×17,2	OK033/ OK040
Grande Punto Evo (199)															
1.4 Abarth	10/09→	120	163	BR	+1 w.i.	[+]	**PF0127**	124,7×70,7×15,1		BSC		[-]	**PF0230**	102×47,1×17,2	OK033/ OK040
1.4 Abarth	10/09→	120	163	BR	+2 w.i.	[+]	**PF0591**	124,7×70,7×15,1		BSC	+w.i.	[+]	**PF0446**	102×47,1×17,2	OK012
2.0 Abarth	10/09→	199	271	BR	+1 w.i.	[+]	**PF0127**	124,7×70,7×15,1		BSC		[-]	**PF0230**	102×47,1×17,2	OK033/ OK040
2.0 Abarth	10/09→	199	271	BR	+2 w.i.	[+]	**PF0591**	124,7×70,7×15,1		BSC	+w.i.	[+]	**PF0446**	102×47,1×17,2	OK012
ALFA ROMEO															
4C															
1.8 Tbi	03/13→	177	241	BR		[+]	**PF0591**	124,7×70,7×15,1		LG		[+]	**PF0803**	116,7×49,9×17,8	OK039
33															
1.3	90→95			LG		[+]	**PF0119**	95×62×17	OK030						
1.5	90→95			LG		[+]	**PF0119**	95×62×17	OK030						
1.7 16V	90→95			LG		[+]	**PF0119**	95×62×17	OK030						
1.7 16V										LG		[-]	**PF0116**	87×66,7×16,5	OK032
1.7 ie 16V /SW										LG		[-]	**PF0116**	87×66,7×16,5	OK032
1.7 Quadrifoglio										LG		[-]	**PF0116**	87×66,7×16,5	OK032
1.7	89→			LG	+ABS	[+]	**PF0119**	95×62×17	OK030	LG		[-]	**PF0116**	87×66,7×16,5	OK032

		KW	CV	SiS	i	W.i.	MAGNETI MARELLI	W×H×Th (mm)	Extra kit [Opt]	SiS	i	W.i.	MAGNETI MARELLI	W×H×Th (mm)	Extra kit [Opt]
ALFA ROMEO															
145 (930)															
1.3i	94 → 96			LG	-ABS	[+]	**PF0105**	104×66,4×17	OK030						
1.3i	94 → 96			LG	+ABS	[+]	**PF0105**	104×66,4×17	OK030	LG		[-]	**PF0106**	86,8×44,6×14,2	OK032
1.4 i.e.	07/94 → 12/96	66	90	LG	-ABS	[+]	**PF0105**	104×66,4×17	OK030						
1.4 i.e.	07/94 → 12/96	66	90	LG	+ABS	[+]	**PF0105**	104×66,4×17	OK030	LG		[-]	**PF0783**	87,2×44,5×14,3	OK032
1.4 i.e. 16V T.S.	12/96 → 01/01	76	103	ATE		[+]	**PF0104**	156,4×52,5×17,8		LG		[-]	**PF0783**	87,2×44,5×14,3	OK032
1.4i 16V	97 → 01			ATE	pinza post. in alluminio	[+]	**PF0782**	151,4×52×18		LG		[-]	**PF0106**	86,8×44,6×14,2	OK032
1.6 i.e.	10/94 → 12/96	76	103	LG		[+]	**PF0105**	104×66,4×17	OK030	LG		[-]	**PF0783**	87,2×44,5×14,3	OK032
1.6 i.e. 16V T.S.	12/96 → 01/01	88	120	ATE	-ABS	[+]	**PF0104**	156,4×52,5×17,8		LG		[-]	**PF0783**	87,2×44,5×14,3	OK032
1.6 i.e. 16V T.S.	12/96 → 01/01	88	120	ATE	+ABS	[+]	**PF0782**	151,4×52×18		LG		[-]	**PF0106**	86,8×44,6×14,2	OK032
1.7i 16V Boxer	94 → 96			LG		[+]	**PF0105**	104×66,4×17	OK030	LG		[-]	**PF0783**	87,2×44,5×14,3	OK032
1.7 i.e. 16V	10/94 → 12/96	95	129	ATE		[+]	**PF0104**	156,4×52,5×17,8		LG		[-]	**PF0783**	87,2×44,5×14,3	OK032
1.7 16V	97 → 01			ATE	pinza post. in alluminio	[+]	**PF0104**	156,4×52,5×17,8		LG		[-]	**PF0106**	86,8×44,6×14,2	OK032
1.8 i.e. 16V	03/98 → 01/01	106	144	ATE		[+]	**PF0103**	155,1×59,1×19,3							
1.8 i.e. 16V T.S.	12/96 → 12/98	103	140	ATE		[+]	**PF0103**	155,1×59,1×19,3							
1.9 D	07/94 → 02/99	68	92	LG		[+]	**PF0105**	104×66,4×17	OK030	LG		[-]	**PF0783**	87,2×44,5×14,3	OK032
1.9 TD	10/94 → 02/99	66	90	ATE		[+]	**PF0104**	156,4×52,5×17,8		LG		[-]	**PF0783**	87,2×44,5×14,3	OK032
1.9 JTD	02/99 → 01/01	77	105	ATE		[+]	**PF0102**	156,4×52,5×17,8		LG		[-]	**PF0106**	86,8×44,6×14,2	OK032
1.9 TD	97 → 01			ATE	pinza post. in alluminio	[+]	**PF0782**	151,4×52×18		LG		[-]	**PF0106**	86,8×44,6×14,2	OK032
2.0 16V Quadrifoglio	03/98 → 01/01	114	155	ATE		[+]	**PF0101**	155,1×59,1×19,3		LG		[-]	**PF0783**	87,2×44,5×14,3	OK032
2.0 16V T.S.	10/95 → 01/01	110	150	ATE		[+]	**PF0103**	155,1×59,1×19,3							
146 (930)															
1.3i	94 → 96			LG	-ABS	[+]	**PF0105**	104×66,4×17	OK030						
1.3i	94 → 96			LG	+ABS	[+]	**PF0105**	104×66,4×17	OK030	LG		[-]	**PF0106**	86,8×44,6×14,2	OK032
1.4 i.e.	12/94 → 12/96	66	90	LG	-ABS	[+]	**PF0105**	104×66,4×17	OK030						
1.4 i.e.	12/94 → 12/96	66	90	LG	+ABS	[+]	**PF0105**	104×66,4×17	OK030	LG		[-]	**PF0783**	87,2×44,5×14,3	OK032
1.4 i.e. 16V T.S.	11/96 → 01/01	76	103	ATE		[+]	**PF0104**	156,4×52,5×17,8		LG		[-]	**PF0783**	87,2×44,5×14,3	OK032
1.4i 16V	97 → 01			ATE	pinza post. in alluminio	[+]	**PF0782**	151,4×52×18		LG		[-]	**PF0106**	86,8×44,6×14,2	OK032
1.6 i.e.	12/94 → 12/96	76	103	LG		[+]	**PF0105**	104×66,4×17	OK030	LG		[-]	**PF0783**	87,2×44,5×14,3	OK032
1.6 i.e. 16V T.S.	11/96 → 01/01	88	120	ATE	-ABS	[+]	**PF0104**	156,4×52,5×17,8							
1.6 i.e. 16V T.S.	11/96 → 01/01	88	120	ATE	+ABS	[+]	**PF0104**	156,4×52,5×17,8		LG		[-]	**PF0783**	87,2×44,5×14,3	OK032
1.6i 16V	97 → 01			ATE	pinza post. in alluminio	[+]	**PF0782**	151,4×52×18		LG		[-]	**PF0106**	86,8×44,6×14,2	OK032
1.7i 16V Boxer	94 → 96			LG		[+]	**PF0105**	104×66,4×17	OK030	LG		[-]	**PF0783**	87,2×44,5×14,3	OK032
1.7 i.e. 16V	12/94 → 12/96	95	129	ATE		[+]	**PF0104**	156,4×52,5×17,8		LG		[-]	**PF0783**	87,2×44,5×14,3	OK032
1.7 16V	97 → 01			ATE	pinza post. in alluminio	[+]	**PF0104**	156,4×52,5×17,8		LG		[-]	**PF0106**	86,8×44,6×14,2	OK032
1.8 i.e. 16V T.S.	11/96 → 01/01	103	140	ATE		[+]	**PF0103**	155,1×59,1×19,3							
1.8 i.e. 16V T.S.	03/98 → 01/01	106	144	ATE		[+]	**PF0103**	155,1×59,1×19,3							
1.9 D	05/95 → 09/96	68	92	LG		[+]	**PF0105**	104×66,4×17	OK030						

		KW	CV	SiS	i	W.i.	MAGNETI MARELLI	W×H×Th (mm)	Extra kit [Opt]	SiS	i	W.i.	MAGNETI MARELLI	W×H×Th (mm)	Extra kit [Opt]
ALFA ROMEO															
146 (930)															
1.9 TD	12/94 → 02/99	66	90	LG	-ABS	[+]	**PF0105**	104×66,4×17	OK030	LG		[-]	**PF0783**	87,2×44,5×14,3	OK032
1.9 TD	12/94 → 02/99	66	90	ATE	+ABS	[+]	**PF0104**	156,4×52,5×17,8		LG		[-]	**PF0783**	87,2×44,5×14,3	OK032
1.9 TD	97 → 01			ATE	pinza post. in alluminio	[+]	**PF0782**	151,4×52×18		LG		[-]	**PF0106**	86,8×44,6×14,2	OK032
1.9 JTD	02/99 → 01/01	77	105	ATE		[+]	**PF0102**	156,4×52,5×17,8		LG		[-]	**PF0106**	86,8×44,6×14,2	OK032
2.0 16V Quadrifoglio	03/98 → 01/01	114	155	ATE		[+]	**PF0101**	155,1×59,1×19,3		LG		[-]	**PF0783**	87,2×44,5×14,3	OK032
2.0 16V T.S.	10/95 → 01/01	110	150	ATE		[+]	**PF0101**	155,1×59,1×19,3		LG		[-]	**PF0783**	87,2×44,5×14,3	OK032
147 (937)															
1.6 16V T.S. ECO	01/01 →	77	105	ATE	937AXA1A	[+]	**PF0103**	155,1×59,1×19,3		LG		[-]	**PF0109**	95,8×43,9×16,5	OK039/ OK069
1.6 16V T.S. ECO	01/01 →	77	105	ATE	937AXA1A	[+]	**PF0108**	155,1×59,3×19		LG		[-]	**PF0109**	95,8×43,9×16,5	OK039/ OK069
1.6 16V T.S.	01/01 →	88	120	ATE	937AXA1A	[+]	**PF0103**	155,1×59,1×19,3		LG		[-]	**PF0109**	95,8×43,9×16,5	OK039/ OK069
1.9 JTD	06/03 →	74	101	ATE		[+]	**PF0103**	155,1×59,1×19,3		LG		[-]	**PF0109**	95,8×43,9×16,5	OK039/ OK069
1.9 JTD	04/01 →	85	115	ATE	937AXA1A	[+]	**PF0103**	155,1×59,1×19,3		LG		[-]	**PF0109**	95,8×43,9×16,5	OK039/ OK069
1.9 JTD 16V	11/02 →	103	140	ATE		[+]	**PF0118**	155,1×59,1×19,3		LG		[-]	**PF0109**	95,8×43,9×16,5	OK039/ OK069
1.9 JTD 16V	09/03 → 09/04	93	126	ATE		[+]	**PF0118**	155,1×59,1×19,3		LG		[-]	**PF0109**	95,8×43,9×16,5	OK039/ OK069
1.9 JTD 16V	10/04 →	100	136	ATE		[+]	**PF0118**	155,1×59,1×19,3		LG		[-]	**PF0109**	95,8×43,9×16,5	OK039/ OK069
1.9 JTDM	10/04 →	85	115	ATE		[+]	**PF0118**	155,1×59,1×19,3		LG		[-]	**PF0109**	95,8×43,9×16,5	OK039/ OK069
1.9 JTDM 8V	07/05 →	88	120	ATE		[+]	**PF0118**	155,1×59,1×19,3		LG		[-]	**PF0109**	95,8×43,9×16,5	OK039/ OK069
1.9 JTDM 16V	07/05 →	110	150	ATE		[+]	**PF0103**	155,1×59,1×19,3		LG		[-]	**PF0109**	95,8×43,9×16,5	OK039/ OK069
1.9 JTDM 16V	06/08 →	125	170	ATE		[+]	**PF0103**	155,1×59,1×19,3		LG		[-]	**PF0109**	95,8×43,9×16,5	OK039/ OK069
2.0	07/02 → 05/05	121	165	ATE		[+]	**PF0103**	155,1×59,1×19,3		LG		[-]	**PF0109**	95,8×43,9×16,5	OK039/ OK069
2.0 16V T.S.	01/01 →	110	150	ATE	937AXC1_	[+]	**PF0103**	155,1×59,1×19,3		LG		[-]	**PF0109**	95,8×43,9×16,5	OK039/ OK069
3.2 GTA	02/03 →	184	250	BR		[+]	**PF0107**	109,7×69,3×17,8		LG		[-]	**PF0109**	95,8×43,9×16,5	OK039/ OK069
155 (167)															
1.6 16V T.S.	05/96 → 12/97	88	120	LG		[+]	**PF0105**	104×66,4×17	OK030	LG		[-]	**PF0783**	87,2×44,5×14,3	OK032
1.7 T.S.	04/93 → 04/96	83	113	LG		[+]	**PF0105**	104×66,4×17	OK030	LG		[-]	**PF0783**	87,2×44,5×14,3	OK032
1.7 T.S.	04/93 → 04/96	85	115	LG	(167.A4D, 167.A4H)	[+]	**PF0105**	104×66,4×17	OK030	LG		[-]	**PF0783**	87,2×44,5×14,3	OK032

		KW	CV	SiS	i	W.i.	MAGNETI MARELLI	W×H×Th (mm)	Extra kit [Opt]	SiS	i	W.i.	MAGNETI MARELLI	W×H×Th (mm)	Extra kit [Opt]
ALFA ROMEO															
155 (167)															
1.7 T.S. 16V	05/96 → 12/97	103	140	LG		[+]	**PF0105**	104×66,4×17	OK030	LG		[-]	**PF0783**	87,2×44,5×14,3	OK032
1.8 T.S.	02/92 → 12/97	77	105	LG		[+]	**PF0105**	104×66,4×17	OK030	LG		[-]	**PF0783**	87,2×44,5×14,3	OK032
1.8 T.S.	02/92 → 06/93	95	129	LG		[+]	**PF0105**	104×66,4×17	OK030	LG		[-]	**PF0783**	87,2×44,5×14,3	OK032
1.8 T.S. Sport	01/92 → 12/96	93	127	LG	(167.A4A, 167.A4C, 167.A4E)	[+]	**PF0105**	104×66,4×17	OK030	LG		[-]	**PF0783**	87,2×44,5×14,3	OK032
1.9 TD	04/93 → 12/97	66	90	LG	(167.A3)	[+]	**PF0105**	104×66,4×17	OK030	LG		[-]	**PF0783**	87,2×44,5×14,3	OK032
2.0 16V Turbo Q4	01/92 → 12/97	140	190	LG		[+]	**PF0122**	129,9×59×19	OK030	LG		[-]	**PF0783**	87,2×44,5×14,3	OK032
2.0 16V Turbo Q4	01/92 → 12/97	137	186	LG	(167.A2B, 167.A2C, 167.A2E)	[+]	**PF0122**	129,9×59×19	OK030	LG		[-]	**PF0783**	87,2×44,5×14,3	OK032
2.0 T.S.	02/92 → 04/93	106	144	LG	(167.A2)	[+]	**PF0122**	129,9×59×19	OK030	LG		[-]	**PF0783**	87,2×44,5×14,3	OK032
2.0 T.S.	02/92 → 02/95	104	141	LG	(167.A2A)	[+]	**PF0122**	129,9×59×19	OK030	LG		[-]	**PF0783**	87,2×44,5×14,3	OK032
2.0 T.S. 16V	03/95 → 12/97	110	150	LG	(167.A2G)	[+]	**PF0122**	129,9×59×19	OK030	LG		[-]	**PF0783**	87,2×44,5×14,3	OK032
2.5 TD	04/93 → 12/97	92	125	LG	(167.A1A)	[+]	**PF0122**	129,9×59×19	OK030	LG		[-]	**PF0783**	87,2×44,5×14,3	OK032
2.5 V6	02/92 → 09/96	121	165	LG	(167.A1)	[+]	**PF0122**	129,9×59×19	OK030	LG		[-]	**PF0783**	87,2×44,5×14,3	OK032
2.5 V6	10/92 → 12/97	120	163	LG	(167.A1C, 167.A1E)	[+]	**PF0122**	129,9×59×19	OK030	LG		[-]	**PF0783**	87,2×44,5×14,3	OK032
156 Berlina/SW (932)															
1.6 16V T.S.	09/97 → 09/05	88	120	ATE		[+]	**PF0112**	155,1×59,3×19		LG		[-]	**PF0111**	89,9×50×16,5	OK030
1.6 16V T.S.	09/97 → 09/05	88	120	ATE		[+]	**PF0112**	155,1×59,3×19		LG		[-]	**PF0109**	95,8×43,9×16,5	OK039/ OK069
1.6 16V T.S.	09/97 → 09/05	88	120	ATE		[+]	**PF0101**	155,1×59,1×19,3		LG		[-]	**PF0109**	95,8×43,9×16,5	OK039/ OK069
1.8 16V T.S.	09/97 → 10/00	106	144	ATE		[+]	**PF0112**	155,1×59,3×19		LG		[-]	**PF0111**	89,9×50×16,5	OK030
1.8 16V T.S.	09/97 → 10/00	106	144	ATE		[+]	**PF0112**	155,1×59,3×19		LG		[-]	**PF0109**	95,8×43,9×16,5	OK039/ OK069
1.8 16V T.S.	10/00 → 09/05	103	140	ATE		[+]	**PF0101**	155,1×59,1×19,3		LG		[-]	**PF0109**	95,8×43,9×16,5	OK039/ OK069
1.9 JTD	09/97 → 10/00	77	105	ATE	(932B2)	[+]	**PF0112**	155,1×59,3×19		LG		[-]	**PF0111**	89,9×50×16,5	OK030
1.9 JTD	10/00 → 05/01	81	110	ATE	(932A2B__)	[+]	**PF0112**	155,1×59,3×19		LG		[-]	**PF0109**	95,8×43,9×16,5	OK039/ OK069
1.9 JTD	10/00 → 05/01	81	110	ATE	(932A2B__)	[+]	**PF0101**	155,1×59,1×19,3		LG		[-]	**PF0109**	95,8×43,9×16,5	OK039/ OK069
2.0 16V T.SPARK	09/97 → 10/00	114	155	ATE	(932A2)	[+]	**PF0101**	155,1×59,1×19,3		LG		[-]	**PF0111**	89,9×50×16,5	OK030
2.0 16V T.SPARK	10/00 → 03/02	110	150	ATE	(932A21__)	[+]	**PF0101**	155,1×59,1×19,3		LG		[-]	**PF0109**	95,8×43,9×16,5	OK039/ OK069
2.0 T.S.	11/97 → 04/00	118	160	ATE		[+]	**PF0112**	155,1×59,3×19		LG		[-]	**PF0109**	95,8×43,9×16,5	OK039/ OK069

		KW	CV	SiS	i	W.i.	MAGNETI MARELLI	W×H×Th (mm)	Extra kit [Opt]	SiS	i	W.i.	MAGNETI MARELLI	W×H×Th (mm)	Extra kit [Opt]
ALFA ROMEO															
156 Berlina/SW (932)															
2.4 JTD	10/03 → 09/05	129	175	ATE		[+]	**PF0101**	155,1×59,1×19,3		LG		[-]	**PF0111**	89,9×50×16,5	OK030
2.4 JTD	06/03 → 09/05	120	163	ATE		[+]	**PF0101**	155,1×59,1×19,3		LG		[-]	**PF0109**	95,8×43,9×16,5	OK039/ OK069
2.4 JTD	10/00 → 09/05	103	140	ATE	(932A1B__)	[+]	**PF0101**	155,1×59,1×19,3		LG		[-]	**PF0111**	89,9×50×16,5	OK030
2.4 JTD	03/02 → 09/05	110	150	ATE	(932AXC)	[+]	**PF0101**	155,1×59,1×19,3		LG		[-]	**PF0109**	95,8×43,9×16,5	OK039/ OK069
2.4 JTD	09/97 → 10/00	100	136	ATE	(932B1)	[+]	**PF0112**	155,1×59,3×19		LG		[-]	**PF0109**	95,8×43,9×16,5	OK039/ OK069
2.5 V6 24V	09/97 → 12/01	140	190	ATE	(932A1)	[+]	**PF0101**	155,1×59,1×19,3		LG		[-]	**PF0111**	89,9×50×16,5	OK030
2.5 V6 24V	10/00 → 09/05	141	192	ATE	(932A11_)	[+]	**PF0112**	155,1×59,3×19		LG		[-]	**PF0109**	95,8×43,9×16,5	OK039/ OK069
156 II Berlina/SW (932)															
1.6 16V T.S.	05/00 → 05/06	88	120	ATE	(932A4)	[+]	**PF0103**	155,1×59,1×19,3		LG		[-]	**PF0109**	95,8×43,9×16,5	OK039/ OK069
1.8 16V T.S.	05/00 → 10/00	106	144	ATE	(932A3)	[+]	**PF0103**	155,1×59,1×19,3		LG		[-]	**PF0109**	95,8×43,9×16,5	OK039/ OK069
1.8 16V T.S.	10/00 → 05/06	103	140	ATE	(932B31__)	[+]	**PF0103**	155,1×59,1×19,3		LG		[-]	**PF0109**	95,8×43,9×16,5	OK039/ OK069
1.9 JTD	03/05 → 05/06	110	150	ATE		[+]	**PF0103**	155,1×59,1×19,3		LG		[-]	**PF0111**	89,9×50×16,5	OK030
1.9 JTD	11/03 → 05/06	93	126	ATE		[+]	**PF0103**	155,1×59,1×19,3		LG		[-]	**PF0111**	89,9×50×16,5	OK030
1.9 JTD	11/02 → 11/04	100	136	ATE		[+]	**PF0103**	155,1×59,1×19,3		LG		[-]	**PF0111**	89,9×50×16,5	OK030
1.9 JTD 16V	11/02 → 05/06	103	140	ATE		[+]	**PF0103**	155,1×59,1×19,3		LG		[-]	**PF0109**	95,8×43,9×16,5	OK039/ OK069
1.9 JTD Mj	05/01 → 05/06	85	115	ATE	(932B2B, 932B2C)	[+]	**PF0103**	155,1×59,1×19,3		LG		[-]	**PF0109**	95,8×43,9×16,5	OK039/ OK069
1.9 JTD 16V Q4	07/04 → 05/06	110	150	ATE		[+]	**PF0101**	155,1×59,1×19,3		LG		[-]	**PF0109**	95,8×43,9×16,5	OK039/ OK069
2.0	03/02 → 05/06	119	162	ATE		[+]	**PF0103**	155,1×59,1×19,3		LG		[-]	**PF0111**	89,9×50×16,5	OK030
2.0 JTS	03/02 → 05/06	122	166	ATE	(932BXA)	[+]	**PF0103**	155,1×59,1×19,3		LG		[-]	**PF0111**	89,9×50×16,5	OK030
2.4 JTD	06/03 → 05/06	120	163	ATE		[+]	**PF0103**	155,1×59,1×19,3		LG		[-]	**PF0109**	95,8×43,9×16,5	OK039/ OK069
2.4 JTD	10/03 → 05/06	129	175	ATE		[+]	**PF0103**	155,1×59,1×19,3		LG		[-]	**PF0109**	95,8×43,9×16,5	OK039/ OK069
2.5 V6 24V	10/00 → 05/06	141	192	ATE	(932B11_)	[+]	**PF0103**	155,1×59,1×19,3		LG		[-]	**PF0109**	95,8×43,9×16,5	OK039/ OK069
3.2 GTA	03/02 → 05/06	184	250	BR	(932BXB)	[+]	**PF0107**	109,7×69,3×17,8		LG		[-]	**PF0109**	95,8×43,9×16,5	OK039/ OK069
156 Cross Wagon (932)															
Cross Wagon 4x4	09/05 → 12/07			BR		[+]	**PF0110**	131,8×77,3×15,8		LG		[-]	**PF0109**	95,8×43,9×16,5	OK039/ OK069

		KW	CV													
				SiS	i	W.i.	MAGNETI MARELLI	W×H×Th (mm)	Extra kit [Opt]	SiS	i	W.i.	MAGNETI MARELLI	W×H×Th (mm)	Extra kit [Opt]
ALFA ROMEO															
159 Berlina (939)															
1.8 TBi	05/09 → 11/11	147	200	BR		[+]	**PF0113**	131,8×77,3×15,8		LG	+Kit Sport	[-]	**PF0114**	116,7×49,9×17,8	OK039/ OK091
1.8 MPI	03/07 → 11/11	103	140	ATE		[+]	**PF0115**	155,2×71,3×20,2		LG	-Kit Sport	[-]	**PF0114**	116,7×49,9×17,8	OK039/ OK085
1.8 16V	07/08 → 11/11			BR	MY08	[+]	**PF0423**	109,9×80,6×15,5		LG	+Kit Sport	[-]	**PF0114**	116,7×49,9×17,8	OK039/ OK091
1.9 JTS	09/05 → 11/11	118	160	ATE		[+]	**PF0115**	155,2×71,3×20,2		LG	-Kit Sport	[-]	**PF0114**	116,7×49,9×17,8	OK039/ OK085
1.9 Jts 16V	07/08 → 11/11	118	160	BR	MY08	[+]	**PF0423**	109,9×80,6×15,5		LG	+Kit Sport	[-]	**PF0114**	116,7×49,9×17,8	OK039/ OK091
1.9 JTDM 8V	09/05 → 11/11	88	120	ATE		[+]	**PF0115**	155,2×71,3×20,2		LG	-Kit Sport	[-]	**PF0114**	116,7×49,9×17,8	OK039/ OK085
1.9 JTDM 8V	09/05 → 11/11	85	115	BR		[+]	**PF0423**	109,9×80,6×15,5		LG	+Kit Sport	[-]	**PF0114**	116,7×49,9×17,8	OK039/ OK091
1.9 JTDM 8V	07/08 → 11/11	85	115	BR		[+]	**PF0423**	109,9×80,6×15,5		LG	+Kit Sport	[-]	**PF0114**	116,7×49,9×17,8	OK039/ OK091
1.9 JTDM 16V	09/05 → 11/11	110	150	ATE		[+]	**PF0115**	155,2×71,3×20,2		LG	-Kit Sport	[-]	**PF0114**	116,7×49,9×17,8	OK039/ OK085
1.9 JTDM 16V	07/08 → 11/11	110	150	BR		[+]	**PF0423**	109,9×80,6×15,5		LG	+Kit Sport	[-]	**PF0114**	116,7×49,9×17,8	OK039/ OK091
1.9 JTDM 16V	09/05 → 11/11	100	136	BR		[+]	**PF0423**	109,9×80,6×15,5		LG	+Kit Sport	[-]	**PF0114**	116,7×49,9×17,8	OK039/ OK091
2.0 JTDM	05/09 → 11/11	120	163	ATE		[+]	**PF0115**	155,2×71,3×20,2		LG	-Kit Sport	[-]	**PF0114**	116,7×49,9×17,8	OK039/ OK085
2.0 JTDM	05/09 → 11/11	125	170	ATE		[+]	**PF0115**	155,2×71,3×20,2		LG	-Kit Sport	[-]	**PF0114**	116,7×49,9×17,8	OK039/ OK085
2.0 JTDM	06/10 → 11/11	100	136	ATE		[+]	**PF0115**	155,2×71,3×20,2		LG	-Kit Sport	[-]	**PF0114**	116,7×49,9×17,8	OK039/ OK085
2.2 JTS	09/05 → 11/11	136	185	ATE		[+]	**PF0115**	155,2×71,3×20,2		LG	-Kit Sport	[-]	**PF0114**	116,7×49,9×17,8	OK039/ OK085
2.2 Jts 16V	07/08 → 11/11			BR	MY08	[+]	**PF0423**	109,9×80,6×15,5		LG	+Kit Sport	[-]	**PF0114**	116,7×49,9×17,8	OK039/ OK091
2.4 JTDM	09/05 → 11/11	147	200	BR		[+]	**PF0113**	131,8×77,3×15,8		LG	+Kit Sport	[-]	**PF0114**	116,7×49,9×17,8	OK039/ OK091
2.4 JTDM	05/07 → 11/11	154	210	BR		[+]	**PF0113**	131,8×77,3×15,8		LG	+Kit Sport	[-]	**PF0114**	116,7×49,9×17,8	OK039/ OK091
2.4 JTDM Q4	05/07 → 11/11	154	210	BR		[+]	**PF0113**	131,8×77,3×15,8		LG	+Kit Sport	[-]	**PF0114**	116,7×49,9×17,8	OK039/ OK091
3.2 JTS	02/08 → 11/11	191	260	BR		[+]	**PF0113**	131,8×77,3×15,8		LG	+Kit Sport	[-]	**PF0114**	116,7×49,9×17,8	OK039/ OK091
3.2 JTS Q4	12/05 → 11/11	191	260	BR		[+]	**PF0113**	131,8×77,3×15,8		LG	+Kit Sport	[-]	**PF0114**	116,7×49,9×17,8	OK039/ OK091

		KW	CV	SiS	i	W.i.	MAGNETI MARELLI	W×H×Th (mm)	Extra kit [Opt]	SiS	i	W.i.	MAGNETI MARELLI	W×H×Th (mm)	Extra kit [Opt]
ALFA ROMEO															
159 Sportwagon (939)															
1.8 TBi	05/09 → 11/11	147	200	BR		[+]	**PF0113**	131,8×77,3×15,8		LG	+Kit Sport	[-]	**PF0114**	116,7×49,9×17,8	OK039/ OK091
1.8 MPI	03/07 → 11/11	103	140	ATE		[+]	**PF0115**	155,2×71,3×20,2		LG	-Kit Sport	[-]	**PF0114**	116,7×49,9×17,8	OK039/ OK085
1.8 16V	07/08 → 11/11			BR	MY08	[+]	**PF0423**	109,9×80,6×15,5		LG	+Kit Sport	[-]	**PF0114**	116,7×49,9×17,8	OK039/ OK091
1.9 JTS	03/06 → 11/11	118	160	ATE		[+]	**PF0115**	155,2×71,3×20,2		LG	-Kit Sport	[-]	**PF0114**	116,7×49,9×17,8	OK039/ OK085
1.9 Jts 16V	07/08 → 11/11	118	160	BR	MY08	[+]	**PF0423**	109,9×80,6×15,5		LG	+Kit Sport	[-]	**PF0114**	116,7×49,9×17,8	OK039/ OK091
1.9 JTDM 16V	03/06 → 11/11	110	150	ATE		[+]	**PF0115**	155,2×71,3×20,2		LG	-Kit Sport	[-]	**PF0114**	116,7×49,9×17,8	OK039/ OK085
1.9 JTDM 16V	07/08 → 11/11	110	150	BR		[+]	**PF0423**	109,9×80,6×15,5		LG	+Kit Sport	[-]	**PF0114**	116,7×49,9×17,8	OK039/ OK091
1.9 JTDM 16V	03/06 → 11/11	100	136	BR		[+]	**PF0423**	109,9×80,6×15,5		LG	+Kit Sport	[-]	**PF0114**	116,7×49,9×17,8	OK039/ OK091
1.9 JTDM 8V	03/06 → 11/11	88	120	ATE		[+]	**PF0115**	155,2×71,3×20,2		LG	-Kit Sport	[-]	**PF0114**	116,7×49,9×17,8	OK039/ OK085
1.9 JTDM 8V	03/06 → 11/11	85	115	BR		[+]	**PF0423**	109,9×80,6×15,5		LG	+Kit Sport	[-]	**PF0114**	116,7×49,9×17,8	OK039/ OK091
2.0 JTDM	05/09 → 11/11	120	163	ATE		[+]	**PF0115**	155,2×71,3×20,2		LG	-Kit Sport	[-]	**PF0114**	116,7×49,9×17,8	OK039/ OK085
2.0 JTDM	05/09 → 11/11	125	170	ATE		[+]	**PF0115**	155,2×71,3×20,2		LG	-Kit Sport	[-]	**PF0114**	116,7×49,9×17,8	OK039/ OK085
2.0 JTDM	06/10 → 11/11	100	136	ATE		[+]	**PF0115**	155,2×71,3×20,2		LG	-Kit Sport	[-]	**PF0114**	116,7×49,9×17,8	OK039/ OK085
2.2 JTS	03/06 → 11/11	136	185	ATE		[+]	**PF0115**	155,2×71,3×20,2		LG	-Kit Sport	[-]	**PF0114**	116,7×49,9×17,8	OK039/ OK085
2.2 Jts 16V	07/08 → 11/11			BR	MY08	[+]	**PF0423**	109,9×80,6×15,5		LG	+Kit Sport	[-]	**PF0114**	116,7×49,9×17,8	OK039/ OK091
2.4 JTDM	03/06 → 11/11	147	200	BR		[+]	**PF0113**	131,8×77,3×15,8		LG	+Kit Sport	[-]	**PF0114**	116,7×49,9×17,8	OK039/ OK091
2.4 JTDM	05/07 → 11/11	154	210	BR		[+]	**PF0113**	131,8×77,3×15,8		LG	+Kit Sport	[-]	**PF0114**	116,7×49,9×17,8	OK039/ OK091
2.4 JTDM Q4	05/07 → 11/11	154	210	BR		[+]	**PF0113**	131,8×77,3×15,8		LG	+Kit Sport	[-]	**PF0114**	116,7×49,9×17,8	OK039/ OK091
3.2 JTS	02/08 → 11/11	191	260	BR		[+]	**PF0113**	131,8×77,3×15,8		LG	+Kit Sport	[-]	**PF0114**	116,7×49,9×17,8	OK039/ OK091
3.2 JTS Q4	03/06 → 11/11	191	260	BR		[+]	**PF0113**	131,8×77,3×15,8		LG	+Kit Sport	[-]	**PF0114**	116,7×49,9×17,8	OK039/ OK091

		KW	CV													
				SiS	i	W.i.	MAGNETI MARELLI	W×H×Th (mm)	Extra kit [Opt]	SiS	i	W.i.	MAGNETI MARELLI	W×H×Th (mm)	Extra kit [Opt]
ALFA ROMEO															
164															
2.0	06/87 → 09/98	102	138	LG		[+]	**PF0226**	110×58,5×19	OK030						
2.0	11/87 → 10/92	105	143	LG		[+]	**PF0226**	110×58,5×19	OK030						
2.0 Turbo	10/87 → 09/98	128	174	LG		[+]	**PF0117**	129,9×59×19	OK030	LG		[-]	**PF0116**	87×66,7×16,5	OK032
2.0 Turbo	07/90 → 10/92	148	201	LG		[+]	**PF0117**	129,9×59×19	OK030	LG		[-]	**PF0116**	87×66,7×16,5	OK032
2.0 Turbo	07/90 → 10/92	152	207	LG		[+]	**PF0117**	129,9×59×19	OK030	LG		[-]	**PF0116**	87×66,7×16,5	OK032
2.0 Turbo	02/88 → 10/92	129	175	LG		[+]	**PF0117**	129,9×59×19	OK030						
2.0 Twin Spark	06/87 → 06/90	109	148							LG		[-]	**PF0116**	87×66,7×16,5	OK032
2.0 Twin Spark	07/90 → 10/92	106	144							LG		[-]	**PF0116**	87×66,7×16,5	OK032
2.0 V6 Turbo	03/91 → 09/92	150	204	LG	(164.A2G, 164.A2F)	[+]	**PF0117**	129,9×59×19	OK030						
2.0 V6 Turbo	09/92 → 09/98	148	201	LG	(164.K3)	[+]	**PF0117**	129,9×59×19	OK030						
2.5 TD	06/87 → 09/92	84	114	LG	(164.A1A)	[+]	**PF0117**	129,9×59×19	OK030	LG		[-]	**PF0116**	87×66,7×16,5	OK032
2.5 TD	09/92 → 09/98	92	125	LG	(164.K2A, 164.K2B)	[+]	**PF0117**	129,9×59×19	OK030						
2.5 V6	09/92 → 09/98	120	163	LG		[+]	**PF0117**	129,9×59×19	OK030						
3.0	11/92 → 10/95	155	211	LG		[+]	**PF0117**	129,9×59×19	OK030	LG		[-]	**PF0116**	87×66,7×16,5	OK032
3.0	11/87 → 09/91	138	188	LG		[+]	**PF0117**	129,9×59×19	OK030	LG		[-]	**PF0116**	87×66,7×16,5	OK032
3.0	02/88 → 10/92	147	200	LG		[+]	**PF0117**	129,9×59×19	OK030	LG		[-]	**PF0116**	87×66,7×16,5	OK032
3.0	03/95 → 10/97	157	213	LG		[+]	**PF0117**	129,9×59×19	OK030	LG		[-]	**PF0116**	87×66,7×16,5	OK032
3.0	03/95 → 08/97	170	231	LG		[+]	**PF0117**	129,9×59×19	OK030	LG		[-]	**PF0116**	87×66,7×16,5	OK032
3.0	11/92 → 10/97	150	204	LG		[+]	**PF0117**	129,9×59×19	OK030	LG		[-]	**PF0116**	87×66,7×16,5	OK032
3.0	10/94 → 08/97	145	197	LG		[+]	**PF0117**	129,9×59×19	OK030	LG		[-]	**PF0116**	87×66,7×16,5	OK032
3.0	04/93 → 02/95	168	228	LG		[+]	**PF0117**	129,9×59×19	OK030	LG		[-]	**PF0116**	87×66,7×16,5	OK032
3.0	04/93 → 02/95	152	207	LG		[+]	**PF0117**	129,9×59×19	OK030	LG		[-]	**PF0116**	87×66,7×16,5	OK032
3.0	03/95 → 10/97	154	209	LG		[+]	**PF0117**	129,9×59×19	OK030	LG		[-]	**PF0116**	87×66,7×16,5	OK032
3.0	03/95 → 08/97	151	205	LG		[+]	**PF0117**	129,9×59×19	OK030	LG		[-]	**PF0116**	87×66,7×16,5	OK032
3.0 V6	06/87 → 09/92	141	192	LG	(164.A)	[+]	**PF0117**	129,9×59×19	OK030	LG		[-]	**PF0116**	87×66,7×16,5	OK032
3.0 V6	06/87 → 09/92	135	184	LG	(164.AD, 164.AH, 164.AB)	[+]	**PF0117**	129,9×59×19	OK030						
3.0 V6	09/92 → 09/98	132	180	LG	(164.H1A, 164.H1B, 164.K1P)	[+]	**PF0117**	129,9×59×19	OK030						
3.0 24V Q4	02/94 → 09/98	170	231		(164.K1M, 164.K1C)					LG		[-]	**PF0111**	89,9×50×16,5	OK030
3.0 24V QV	09/92 → 09/98	171	233	LG	(164.H1)	[+]	**PF0117**	129,9×59×19	OK030						
3.0 i.e. QV	09/90 → 09/92	147	200	LG	(164.AG)	[+]	**PF0117**	129,9×59×19	OK030						
3.0 All-wheel Drive	11/92 → 10/97	171	233	LG	All-wheel Drive	[+]	**PF0117**	129,9×59×19	OK030	LG		[-]	**PF0116**	87×66,7×16,5	OK032
3.0 24V	09/92 → 09/98	155	211	LG	(164.K1)	[+]	**PF0117**	129,9×59×19	OK030						

		KW	CV	SiS	i	W.i.	MAGNETI MARELLI	W×H×Th (mm)	Extra kit [Opt]	SiS	i	W.i.	MAGNETI MARELLI	W×H×Th (mm)	Extra kit [Opt]
ALFA ROMEO															
166 (936)															
2.0 T.S.	09/98 → 10/00	114	155	ATE	936A3A	[+]	**PF0118**	155,1×59,1×19,3		LG		[-]	**PF0111**	89,9×50×16,5	OK030
2.0 V6	09/98 → 08	151	205	ATE	936A3	[+]	**PF0118**	155,1×59,1×19,3		LG		[-]	**PF0111**	89,9×50×16,5	OK030
2.4 JTD	09/98 → 10/00	100	136	ATE	936A2A	[+]	**PF0118**	155,1×59,1×19,3		LG		[-]	**PF0111**	89,9×50×16,5	OK030
2.5 V6 24V	09/98 → 10/00	140	190	BR	936A2	[+]	**PF0113**	131,8×77,3×15,8		LG		[-]	**PF0111**	89,9×50×16,5	OK030
3.0 V6 24V	09/98 → 10/00	166	226	BR	936A1	[+]	**PF0113**	131,8×77,3×15,8		LG		[-]	**PF0111**	89,9×50×16,5	OK030
166 II (936)															
2.0 T.S.	10/00 → 08	110	150	ATE	(936A3B__)	[+]	**PF0118**	155,1×59,1×19,3		LG		[-]	**PF0111**	89,9×50×16,5	OK030
2.4 JTD	04/02 → 08	110	150	ATE		[+]	**PF0118**	155,1×59,1×19,3		LG		[-]	**PF0111**	89,9×50×16,5	OK030
2.4 JTD	10/03 → 08	129	175	ATE		[+]	**PF0118**	155,1×59,1×19,3		LG		[-]	**PF0111**	89,9×50×16,5	OK030
2.4 JTD	07/06 → 08	132	180	ATE		[+]	**PF0118**	155,1×59,1×19,3		LG		[-]	**PF0111**	89,9×50×16,5	OK030
2.4 JTD	07/05 → 08	136	185	ATE		[+]	**PF0118**	155,1×59,1×19,3		LG		[-]	**PF0111**	89,9×50×16,5	OK030
2.4 JTD	10/00 → 08	103	140	ATE	(936A2B__)	[+]	**PF0118**	155,1×59,1×19,3		LG		[-]	**PF0111**	89,9×50×16,5	OK030
2.5 V6 24V	10/00 → 08	138	188	BR	(936A21__)	[+]	**PF0113**	131,8×77,3×15,8		LG		[-]	**PF0111**	89,9×50×16,5	OK030
3.0 V6 24V	10/00 → 08	162	220	BR	(936A11__)	[+]	**PF0113**	131,8×77,3×15,8		LG		[-]	**PF0111**	89,9×50×16,5	OK030
3.2 V6 24V	10/03 → 08	176	240	BR		[+]	**PF0113**	131,8×77,3×15,8		LG		[-]	**PF0111**	89,9×50×16,5	OK030
AR6 Box (280)															
1.9 D	04/85 → 12/89	51	69	LG		[+]	**PF0175**	130×71,2×19	OK032						
2.4 D	04/85 → 02/86	53	72	LG		[+]	**PF0175**	130×71,2×19	OK032						
2.4 TD	09/86 → 12/89	68	92	LG		[+]	**PF0175**	130×71,2×19	OK032						
2.5 D	03/86 → 12/89	55	75	LG		[+]	**PF0175**	130×71,2×19	OK032						
AR6 Bus (280)															
1.9 D	04/85 → 12/89	51	69	LG		[+]	**PF0175**	130×71,2×19	OK032						
Brera															
1.8 TBi	05/09 →	147	200	BR		[+]	**PF0113**	131,8×77,3×15,8		LG	+Kit Sport	[-]	**PF0114**	116,7×49,9×17,8	OK039/ OK091
2.0 JTDM	03/08 →	120	163	ATE		[+]	**PF0115**	155,2×71,3×20,2		LG	-Kit Sport	[-]	**PF0114**	116,7×49,9×17,8	OK039/ OK085
2.0 JTDM	05/09 →	125	170	ATE		[+]	**PF0115**	155,2×71,3×20,2		LG	-Kit Sport	[-]	**PF0114**	116,7×49,9×17,8	OK039/ OK085
2.0 JTDM	05/09 →	125	170	BR	+ Sport Pack	[+]	**PF0113**	131,8×77,3×15,8		LG	+Kit Sport	[-]	**PF0114**	116,7×49,9×17,8	OK039/ OK091
2.2 JTS	01/06 →	136	185	ATE		[+]	**PF0115**	155,2×71,3×20,2		LG	-Kit Sport	[-]	**PF0114**	116,7×49,9×17,8	OK039/ OK085
2.2 JTS	01/06 →	136	185	BR	+ Sport Pack	[+]	**PF0113**	131,8×77,3×15,8		LG	+Kit Sport	[-]	**PF0114**	116,7×49,9×17,8	OK039/ OK091
2.4 JTDM 20V	01/06 →	147	200	BR		[+]	**PF0113**	131,8×77,3×15,8		LG	+Kit Sport	[-]	**PF0114**	116,7×49,9×17,8	OK039/ OK091
2.4 JTDM 20V	05/07 →	154	210	BR		[+]	**PF0113**	131,8×77,3×15,8		LG	+Kit Sport	[-]	**PF0114**	116,7×49,9×17,8	OK039/ OK091
3.2 JTS	03/08 →	191	260	BR		[+]	**PF0121**	131,8×77,3×15,8		LG	+Kit Sport	[-]	**PF0114**	116,7×49,9×17,8	OK039/ OK091
3.2 JTS Q4	01/06 →	191	260	BR		[+]	**PF0121**	131,8×77,3×15,8		LG	+Kit Sport	[-]	**PF0114**	116,7×49,9×17,8	OK039/ OK091

		KW	CV													
				SiS	i	W.i.	MAGNETI MARELLI	W×H×Th (mm)	Extra kit [Opt]	SiS	i	W.i.	MAGNETI MARELLI	W×H×Th (mm)	Extra kit [Opt]
ALFA ROMEO																
Brera (U.S.A.)																
3.2 All-wheel Drive	01/07 → 12/08			BR		[+]	**PF0121**	131,8×77,3×15,8		LG	+Kit Sport	[-]	**PF0114**	116,7×49,9×17,8	OK039/ OK091
Giulietta (940)																
1.4 TB	04/10 →	85	116	ATE	15"	[+]	**PF0426**	155,3×64,5×19		LG		[+]	**PF0129**	95,8×48,1×17	OK039
1.4 TB BiFuel	12/11 →	88	120	ATE	15"	[+]	**PF0426**	155,3×64,5×19		LG		[+]	**PF0129**	95,8×48,1×17	OK039
1.4 TB	04/10 →	120	163	ATE	16"	[+]	**PF0128**	155,2×71,3×20,2		LG	-Kit Sport	[+]	**PF0425**	116,7×49,9×17,8	OK039/ OK085
1.4 TB	04/10 →	88	120	ATE	16"	[+]	**PF0128**	155,2×71,3×20,2		LG		[+]	**PF0129**	95,8×48,1×17	OK039
1.4 TB	04/10 →	125	170	ATE	16"	[+]	**PF0128**	155,2×71,3×20,2		LG	-Kit Sport	[+]	**PF0425**	116,7×49,9×17,8	OK039/ OK085
1.6 JTDM	04/10 →	77	105	ATE	15"	[+]	**PF0426**	155,3×64,5×19		LG		[+]	**PF0129**	95,8×48,1×17	OK039
1.6 JTDM	04/10 →	77	105	ATE	16"	[+]	**PF0128**	155,2×71,3×20,2		LG	-Kit Sport	[+]	**PF0425**	116,7×49,9×17,8	OK039/ OK085
1.8 TBi	04/10 →	173	235	BR	pinze rosse-brake caliper red	[+]	**PF0501**	131,8×77,3×15,8		LG	+Kit Sport	[+]	**PF0425**	116,7×49,9×17,8	OK039/ OK091
1.8 TBi	09/13 →	177	241	BR	pinze rosse-brake caliper red	[+]	**PF0501**	131,8×77,3×15,8		LG	+Kit Sport	[+]	**PF0425**	116,7×49,9×17,8	OK039/ OK091
2.0 JTDM	04/10 →	103	140	ATE	16"	[+]	**PF0128**	155,2×71,3×20,2		LG		[+]	**PF0129**	95,8×48,1×17	OK039
2.0 JTDM	08/13 →	110	150	ATE	pinze rosse-brake caliper red	[+]	**PF0128**	155,2×71,3×20,2		LG	-Kit Sport	[+]	**PF0425**	116,7×49,9×17,8	OK039/ OK085
2.0 JTDM	04/10 →	120	163	ATE	16"	[+]	**PF0128**	155,2×71,3×20,2		LG		[+]	**PF0129**	95,8×48,1×17	OK039
2.0 JTDM	04/10 →	100	136	ATE	16"	[+]	**PF0128**	155,2×71,3×20,2		LG		[+]	**PF0129**	95,8×48,1×17	OK039
2.0 JTDM	04/10 →	125	170	ATE	16"	[+]	**PF0128**	155,2×71,3×20,2		LG		[+]	**PF0129**	95,8×48,1×17	OK039
2.0 JTDM	13 →	129	175	BR	pinze rosse-brake caliper red	[+]	**PF0501**	131,8×77,3×15,8		LG	+Kit Sport	[+]	**PF0425**	116,7×49,9×17,8	OK039/ OK091
GT (03 →)																
1.8 TS	11/03 →	103	140	ATE		[+]	**PF0101**	155,1×59,1×19,3		LG		[-]	**PF0106**	86,8×44,6×14,2	OK032
1.9 JTD	11/03 →	110	150	ATE		[+]	**PF0101**	155,1×59,1×19,3		LG		[-]	**PF0106**	86,8×44,6×14,2	OK032
1.9 JTD	05/08 →	125	170	ATE		[+]	**PF0101**	155,1×59,1×19,3		LG		[-]	**PF0106**	86,8×44,6×14,2	OK032
2.0 JTS	12/06 →	119	162	ATE		[+]	**PF0101**	155,1×59,1×19,3		LG		[-]	**PF0106**	86,8×44,6×14,2	OK032
2.0 JTS	11/03 →	121	165	ATE		[+]	**PF0101**	155,1×59,1×19,3		LG		[-]	**PF0106**	86,8×44,6×14,2	OK032
3.2 GTA	11/03 →	176	240	BR		[+]	**PF0121**	131,8×77,3×15,8		LG		[-]	**PF0106**	86,8×44,6×14,2	OK032
GTV (916C)																
1.8 16V	05/98 →	106	144	ATE	(916C3)	[+]	**PF0101**	155,1×59,1×19,3		LG		[-]	**PF0106**	86,8×44,6×14,2	OK032
2.0 JTS	04/03 → 11	121	165	ATE		[+]	**PF0101**	155,1×59,1×19,3		LG		[-]	**PF0106**	86,8×44,6×14,2	OK032
2.0 T.SPARK 16V	06/95 → 11	110	150	ATE	(916.C2__, 916C2C00)	[+]	**PF0101**	155,1×59,1×19,3		LG		[-]	**PF0106**	86,8×44,6×14,2	OK032
2.0 T.SPARK 16V	05/98 → 08/00	114	155	ATE	(916C2C)	[+]	**PF0101**	155,1×59,1×19,3		LG		[-]	**PF0106**	86,8×44,6×14,2	OK032
2.0 V6 Turbo	06/95 → 11	148	202	ATE	(916.C2A)	[+]	**PF0101**	155,1×59,1×19,3		LG		[-]	**PF0106**	86,8×44,6×14,2	OK032

		KW	CV	SiS	i	W.i.	MAGNETI MARELLI	W×H×Th (mm)	Extra kit [Opt]	SiS	i	W.i.	MAGNETI MARELLI	W×H×Th (mm)	Extra kit [Opt]
ALFA ROMEO															
GTV (916C)															
3.0 V6 24V	10/96 → 10/00	162	220	ATE	(916.C1)	[+]	**PF0101**	155,1×59,1×19,3		LG		[-]	**PF0106**	86,8×44,6×14,2	OK032
3.0 V6 24V	10/00 → 11	160	218	BR	(916.C1B_)	[+]	**PF0107**	109,7×69,3×17,8		LG		[-]	**PF0783**	87,2×44,5×14,3	OK032
3.2 V6 24V	04/03 → 11	176	240	BR		[+]	**PF0107**	109,7×69,3×17,8		LG		[-]	**PF0106**	86,8×44,6×14,2	OK032
Mito (955)															
0.9	07/11 →	63	86	BSC		[+]	**PF0560**	122,9×53,4×18	OK012/ OK040	LG		[+]	**PF0687**	95,8×43,9×17,2	OK039
0.9	07/11 →	63	86	BSC		[+]	**PF0560**	122,9×53,4×18	OK012/ OK040	BSC		[+]	**PF0568**	94,9×42,8×17,4	OK033/ OK040
0.9	13 →	74	101	BSC		[+]	**PF0560**	122,9×53,4×18	OK012/ OK040	LG		[+]	**PF0687**	95,8×43,9×17,2	OK039
0.9	13 →	74	101	BSC		[+]	**PF0560**	122,9×53,4×18	OK012/ OK040	BSC		[+]	**PF0568**	94,9×42,8×17,4	OK033/ OK040
0.9	04/13 →	77	105	BSC		[+]	**PF0560**	122,9×53,4×18	OK012/ OK040	BSC		[+]	**PF0568**	94,9×42,8×17,4	OK033/ OK040
0.9	04/13 →	77	105	BSC		[+]	**PF0560**	122,9×53,4×18	OK012/ OK040	LG		[+]	**PF0687**	95,8×43,9×17,2	OK039
1.3 JTDM	13 →	59	80	BSC	+2 w.i.	[+]	**PF0124**	151×57,4×19	OK012/ OK038	BSC		[-]	**PF0125**	94,9×42,8×16,4	OK033/ OK040
1.3 JTDM	01/11 →	62	84	BSC		[+]	**PF0126**	122,9×53,4×18	OK012/ OK040	BSC		[-]	**PF0125**	94,9×42,8×16,4	OK033/ OK040
1.3 JTDM	09/08 →	66	90	BSC		[+]	**PF0126**	122,9×53,4×18	OK012/ OK040	LG		[+]	**PF0687**	95,8×43,9×17,2	OK039
1.3 JTDM	10/09 →	70	95	BSC		[+]	**PF0126**	122,9×53,4×18	OK012/ OK040	BSC		[-]	**PF0125**	94,9×42,8×16,4	OK033/ OK040
1.4 Bifuel	07/11 →	88	120	BSC		[+]	**PF0126**	122,9×53,4×18	OK012/ OK040	LG		[+]	**PF0687**	95,8×43,9×17,2	OK039
1.4	08/10 →	77	105	BSC		[+]	**PF0126**	122,9×53,4×18	OK012/ OK040	LG		[+]	**PF0687**	95,8×43,9×17,2	OK039
1.4	05/11 →	51	69	BSC		[+]	**PF0126**	122,9×53,4×18	OK012/ OK040	BSC		[-]	**PF0125**	94,9×42,8×16,4	OK033/ OK040
1.4	09/08 →	70	95	BSC		[+]	**PF0126**	122,9×53,4×18	OK012/ OK040	LG		[+]	**PF0687**	95,8×43,9×17,2	OK039
1.4	09/08 →	58	78	BSC		[+]	**PF0126**	122,9×53,4×18	OK012/ OK040	BSC		[-]	**PF0125**	94,9×42,8×16,4	OK033/ OK040
1.4	09/08 →	88	120	BSC		[+]	**PF0126**	122,9×53,4×18	OK012/ OK040	LG		[+]	**PF0687**	95,8×43,9×17,2	OK039
1.4 TB	10/09 →	99	135	BR		[+]	**PF0127**	124,7×70,7×15,1		LG		[+]	**PF0687**	95,8×43,9×17,2	OK039
1.4 TB	10/09 →	99	135	BSC	+2 w.i.	[+]	**PF0124**	151×57,4×19	OK012/ OK038	LG		[+]	**PF0687**	95,8×43,9×17,2	OK039
1.4 TB	13 →	103	140	BSC	+2 w.i.	[+]	**PF0124**	151×57,4×19	OK012/ OK038	BSC		[-]	**PF0125**	94,9×42,8×16,4	OK033/ OK040
1.4 TB	09/08 →	114	155	BR		[+]	**PF0127**	124,7×70,7×15,1		BSC		[-]	**PF0125**	94,9×42,8×16,4	OK033/ OK040

		KW	CV	SiS	i	W.i.	MAGNETI MARELLI	W×H×Th (mm)	Extra kit [Opt]	SiS	i	W.i.	MAGNETI MARELLI	W×H×Th (mm)	Extra kit [Opt]
ALFA ROMEO															
Mito (955)															
1.4 TB	10/09 →	120	163	BSC		[+]	**PF0563**	151×57,4×19	OK012/ OK038	BSC		[-]	**PF0125**	94,9×42,8×16,4	OK033/ OK040
1.4 TB	10/09 →	120	163	BSC		[+]	**PF0563**	151×57,4×19	OK012/ OK038	LG		[+]	**PF0687**	95,8×43,9×17,2	OK039
1.4 TB	10 →	120	163	BSC	+2 w.i.	[+]	**PF0124**	151×57,4×19	OK012/ OK038	LG		[+]	**PF0687**	95,8×43,9×17,2	OK039
1.4 TB	10/09 →	125	170	BR		[+]	**PF0127**	124,7×70,7×15,1		BSC		[-]	**PF0125**	94,9×42,8×16,4	OK033/ OK040
1.4 TB	10/09 →	125	170	BR		[+]	**PF0127**	124,7×70,7×15,1		LG		[+]	**PF0687**	95,8×43,9×17,2	OK039
1.4 TB	04/10 →	125	170	BR	+2 w.i.	[+]	**PF0591**	124,7×70,7×15,1		LG		[+]	**PF0687**	95,8×43,9×17,2	OK039
1.6 JTDM	09/08 →	88	120	BSC		[+]	**PF0563**	151×57,4×19	OK012/ OK038	BSC		[-]	**PF0125**	94,9×42,8×16,4	OK033/ OK040
1.6 JTDM	10 →	88	120	BSC	+2 w.i.	[+]	**PF0124**	151×57,4×19	OK012/ OK038	BSC		[-]	**PF0125**	94,9×42,8×16,4	OK033/ OK040
1.6 JTDM	09/08 →	85	115	BSC		[+]	**PF0563**	151×57,4×19	OK012/ OK038	LG		[+]	**PF0687**	95,8×43,9×17,2	OK039
1.6 JTDM	10 →	85	115	BSC	+2 w.i.	[+]	**PF0124**	151×57,4×19	OK012/ OK038	LG		[+]	**PF0687**	95,8×43,9×17,2	OK039
RZ															
3.0 V6 Zagato	01/92 → 12/94	152	207	LG		[+]	**PF0117**	129,9×59×19	OK030	LG		[-]	**PF0116**	87×66,7×16,5	OK032
Spider (916)															
1.8 16V	05/98 → 04/05	106	144	ATE	(916S3)	[+]	**PF0101**	155,1×59,1×19,3		LG		[-]	**PF0106**	86,8×44,6×14,2	OK032
2.0 JTS	04/03 → 04/05	121	165	ATE		[+]	**PF0101**	155,1×59,1×19,3		LG		[-]	**PF0106**	86,8×44,6×14,2	OK032
2.0 T.SPARK 16V	05/98 → 08/00	114	155	ATE	(916S2B)	[+]	**PF0101**	155,1×59,1×19,3		LG		[-]	**PF0106**	86,8×44,6×14,2	OK032
2.0 T.SPARK 16V	06/95 → 04/05	110	150	ATE	(916S2C00)	[+]	**PF0101**	155,1×59,1×19,3		LG		[-]	**PF0106**	86,8×44,6×14,2	OK032
2.0 V6 Turbo	05/98 → 04/05	148	202	ATE	(916S2A)	[+]	**PF0101**	155,1×59,1×19,3		LG		[-]	**PF0106**	86,8×44,6×14,2	OK032
3.0 V6	06/95 → 04/05	141	192	BR	(916S1)	[+]	**PF0107**	109,7×69,3×17,8		LG		[-]	**PF0106**	86,8×44,6×14,2	OK032
3.0 V6	10/00 → 04/05	160	218	BR	(916S1B00)	[+]	**PF0107**	109,7×69,3×17,8		LG		[-]	**PF0106**	86,8×44,6×14,2	OK032
3.0 V6 24V	01/99 → 10/00	162	220	BR		[+]	**PF0107**	109,7×69,3×17,8		LG		[-]	**PF0106**	86,8×44,6×14,2	OK032
3.2 V6 24V	04/03 → 04/05	176	240	BR		[+]	**PF0107**	109,7×69,3×17,8		LG		[-]	**PF0106**	86,8×44,6×14,2	OK032
Spider III (939)															
1.8 TBi	05/09 →	147	200	BR		[+]	**PF0113**	131,8×77,3×15,8		LG	+Kit Sport	[-]	**PF0114**	116,7×49,9×17,8	OK039/ OK091
2.0 JTDM	04/09 →	120	163	ATE		[+]	**PF0115**	155,2×71,3×20,2		LG	-Kit Sport	[-]	**PF0114**	116,7×49,9×17,8	OK039/ OK085
2.0 JTDM	05/09 →	125	170	BR		[+]	**PF0423**	109,9×80,6×15,5		LG	-Kit Sport	[-]	**PF0114**	116,7×49,9×17,8	OK039/ OK085
2.2 JTS	09/06 → 05/11			ATE		[+]	**PF0115**	155,2×71,3×20,2		LG	-Kit Sport	[-]	**PF0114**	116,7×49,9×17,8	OK039/ OK085
2.2 JTS	09/06 →	136	185	BR		[+]	**PF0423**	109,9×80,6×15,5		LG	-Kit Sport	[-]	**PF0114**	116,7×49,9×17,8	OK039/ OK085

		KW	CV	SiS	i	W.i.	MAGNETI MARELLI	W×H×Th (mm)	Extra kit [Opt]	SiS	i	W.i.	MAGNETI MARELLI	W×H×Th (mm)	Extra kit [Opt]
ALFA ROMEO															
Spider III (939)															
2.4 JTDM	04/07→	147	200	BR		[+]	**PF0121**	131,8×77,3×15,8		LG	+Kit Sport	[-]	**PF0114**	116,7×49,9×17,8	OK039/ OK091
2.4 JTDM	03/08→	154	210	BR		[+]	**PF0121**	131,8×77,3×15,8		LG	+Kit Sport	[-]	**PF0114**	116,7×49,9×17,8	OK039/ OK091
3.2 JTS	03/08→	191	260	BR		[+]	**PF0121**	131,8×77,3×15,8		LG	+Kit Sport	[-]	**PF0114**	116,7×49,9×17,8	OK039/ OK091
3.2 JTS Q4	09/06→	191	260	BR		[+]	**PF0121**	131,8×77,3×15,8		LG	+Kit Sport	[-]	**PF0114**	116,7×49,9×17,8	OK039/ OK091
ASTON MARTIN															
Cygnet															
1.3	04/11→	72	98	AK		[+]	**PF0784**	116,4×51,1×16,6							
AUDI															
80															
1.6	86→									LG		[-]	**PF0116**	87×66,7×16,5	OK032
1.8	86→									LG		[-]	**PF0116**	87×66,7×16,5	OK032
1.8	08/89→									LG		[-]	**PF0116**	87×66,7×16,5	OK032
1.8	86→91									LG		[-]	**PF0116**	87×66,7×16,5	OK032
1.9 D	86→91									LG		[-]	**PF0116**	87×66,7×16,5	OK032
1.9 D	08/89→07/91									LG		[-]	**PF0116**	87×66,7×16,5	OK032
2.0	86→91									LG		[-]	**PF0116**	87×66,7×16,5	OK032
2.0 E	89→									LG		[-]	**PF0116**	87×66,7×16,5	OK032
2.0i	89→									LG		[-]	**PF0116**	87×66,7×16,5	OK032
2.0i 16V	89→									LG		[-]	**PF0116**	87×66,7×16,5	OK032
2.0 E Avant	91→									LG		[-]	**PF0116**	87×66,7×16,5	OK032
2.0i Avant-16V E	91→									LG		[-]	**PF0116**	87×66,7×16,5	OK032
80 Quattro															
1.8 E Quattro	88→									LG		[-]	**PF0116**	87×66,7×16,5	OK032
1.8 Quattro	82→			LG		[-]	**PF0806**	119×69,7×16	OK030	LG		[-]	**PF0116**	87×66,7×16,5	OK032
1.9 E - Quattro E	88→									LG		[-]	**PF0116**	87×66,7×16,5	OK032
2.0 Quattro	82→			LG		[-]	**PF0806**	119×69,7×16	OK030	LG		[-]	**PF0116**	87×66,7×16,5	OK032
2.2 Quattro	82→			LG		[-]	**PF0806**	119×69,7×16	OK030	LG		[-]	**PF0116**	87×66,7×16,5	OK032
2.2 S2 Quattro	93→94									LG		[-]	**PF0116**	87×66,7×16,5	OK032
2.8 E Quattro / Avant	91→94									LG		[-]	**PF0116**	87×66,7×16,5	OK032
80 Coupé															
2.0	84→92									LG		[-]	**PF0116**	87×66,7×16,5	OK032
2.0	08/88→92									LG		[-]	**PF0116**	87×66,7×16,5	OK032
2.0 E	92→96									LG		[-]	**PF0116**	87×66,7×16,5	OK032
2.2	84→88									LG		[-]	**PF0116**	87×66,7×16,5	OK032
2.2	08/88→92									LG		[-]	**PF0116**	87×66,7×16,5	OK032
2.3	84→88									LG		[-]	**PF0116**	87×66,7×16,5	OK032

		KW	CV												
				SiS	i	W.i.	MAGNETI MARELLI	W×H×Th (mm)	Extra kit [Opt]	SiS	i	W.i.	MAGNETI MARELLI	W×H×Th (mm)	Extra kit [Opt]
AUDI															
80 Coupé															
2.3 E	92 → 96									LG		[-]	**PF0116**	87×66,7×16,5	OK032
2.3i	08/88 → 92									LG		[-]	**PF0116**	87×66,7×16,5	OK032
2.3 20V	92 → 96									LG		[-]	**PF0116**	87×66,7×16,5	OK032
2.6	88 → 92									LG		[-]	**PF0116**	87×66,7×16,5	OK032
2.6	08/88 → 92									LG		[-]	**PF0116**	87×66,7×16,5	OK032
2.6 E V6	92 → 96									LG		[-]	**PF0116**	87×66,7×16,5	OK032
2.6 V6	92 → 96									LG		[-]	**PF0116**	87×66,7×16,5	OK032
80 Coupé Quattro															
Quattro	88 → 92									LG		[-]	**PF0116**	87×66,7×16,5	OK032
90															
1.6	84 →			LG		[-]	**PF0806**	119×69,7×16	OK030						
1.6 TD	84 → 03/87									LG		[-]	**PF0116**	87×66,7×16,5	OK032
2.0 TD	84 →			LG		[-]	**PF0806**	119×69,7×16	OK030						
2.0	84 → 03/87									LG		[-]	**PF0116**	87×66,7×16,5	OK032
2.0	03/87 → 09/91									LG		[-]	**PF0116**	87×66,7×16,5	OK032
2.2	84 →			LG		[-]	**PF0806**	119×69,7×16	OK030	LG		[-]	**PF0116**	87×66,7×16,5	OK032
2.2	84 → 03/87									LG		[-]	**PF0116**	87×66,7×16,5	OK032
2.2	03/87 → 09/91									LG		[-]	**PF0116**	87×66,7×16,5	OK032
2.3 (136HP)	03/87 → 09/91									LG		[-]	**PF0116**	87×66,7×16,5	OK032
90 Quattro															
2.2 E Quattro	84 →									LG		[-]	**PF0116**	87×66,7×16,5	OK032
2.3 Quattro	84 →									LG		[-]	**PF0116**	87×66,7×16,5	OK032
2.3 Quattro 20V	88 → 91									LG		[-]	**PF0116**	87×66,7×16,5	OK032
100															
2.0 E	90 →			ATE		[+]	**PF0130**	156,4×74,2×19		LG		[-]	**PF0116**	87×66,7×16,5	OK032
2.0 E Avant	91 →			ATE		[+]	**PF0130**	156,4×74,2×19		LG		[-]	**PF0116**	87×66,7×16,5	OK032
2.0i Avant	91 →			ATE		[+]	**PF0130**	156,4×74,2×19							
2.2 CC-CS-CD	82 →									LG		[-]	**PF0116**	87×66,7×16,5	OK032
2.2 T.	86 → 90									LG		[-]	**PF0116**	87×66,7×16,5	OK032
2.3 CS	86 → 90									LG		[-]	**PF0116**	87×66,7×16,5	OK032
2.3 E Avant	91 →			ATE		[+]	**PF0130**	156,4×74,2×19		LG		[-]	**PF0116**	87×66,7×16,5	OK032
2.4 D	90 →			ATE		[+]	**PF0130**	156,4×74,2×19		LG		[-]	**PF0116**	87×66,7×16,5	OK032
2.4 TD	90 →			ATE		[+]	**PF0130**	156,4×74,2×19		LG		[-]	**PF0116**	87×66,7×16,5	OK032
2.4 D Avant	91 →			ATE		[+]	**PF0130**	156,4×74,2×19		LG		[-]	**PF0116**	87×66,7×16,5	OK032
2.5 TD - Avant	89 → 90									LG		[-]	**PF0116**	87×66,7×16,5	OK032
2.5i TD Sedan	91 →			ATE		[+]	**PF0130**	156,4×74,2×19		LG		[-]	**PF0116**	87×66,7×16,5	OK032
2.6 E Avant	91 →			ATE		[+]	**PF0130**	156,4×74,2×19		LG		[-]	**PF0116**	87×66,7×16,5	OK032
2.8i E	90 →			ATE		[+]	**PF0130**	156,4×74,2×19		LG		[-]	**PF0116**	87×66,7×16,5	OK032
2.8 E Avant	91 →			ATE		[+]	**PF0130**	156,4×74,2×19		LG		[-]	**PF0116**	87×66,7×16,5	OK032
2.8i CD	90 →			ATE		[+]	**PF0130**	156,4×74,2×19		LG		[-]	**PF0116**	87×66,7×16,5	OK032

		KW	CV	SiS	i	W.i.	MAGNETI MARELLI	W×H×Th (mm)	Extra kit [Opt]	SiS	i	W.i.	MAGNETI MARELLI	W×H×Th (mm)	Extra kit [Opt]
AUDI															
100 Quattro															
2.0 E Avant Quattro	91→			ATE		[+]	**PF0130**	156,4×74,2×19		LG		[-]	**PF0116**	87×66,7×16,5	OK032
2.2 S4 T. Quattro	91→94									LG		[-]	**PF0116**	87×66,7×16,5	OK032
2.2 T. Quattro	86→90									LG		[-]	**PF0116**	87×66,7×16,5	OK032
2.3 CD Avant Quattro	89→									LG		[-]	**PF0116**	87×66,7×16,5	OK032
2.3 CD Quattro	89→									LG		[-]	**PF0116**	87×66,7×16,5	OK032
2.3 CS Avant Quattro	89→									LG		[-]	**PF0116**	87×66,7×16,5	OK032
2.3 CS Quattro	89→									LG		[-]	**PF0116**	87×66,7×16,5	OK032
2.3 E Avant Quattro	91→			ATE		[+]	**PF0130**	156,4×74,2×19		LG		[-]	**PF0116**	87×66,7×16,5	OK032
2.6 E Avant Quattro	91→			ATE		[+]	**PF0130**	156,4×74,2×19		LG		[-]	**PF0116**	87×66,7×16,5	OK032
2.8 E Avant Quattro	91→			ATE		[+]	**PF0130**	156,4×74,2×19		LG		[-]	**PF0116**	87×66,7×16,5	OK032
2.8i Quattro E	90→			ATE		[+]	**PF0130**	156,4×74,2×19		LG		[-]	**PF0116**	87×66,7×16,5	OK032
200															
Turbo	→82									LG		[-]	**PF0116**	87×66,7×16,5	OK032
2.0 Avant	86→90									LG		[-]	**PF0116**	87×66,7×16,5	OK032
2.1	10/79→08/83									LG		[-]	**PF0116**	87×66,7×16,5	OK032
2.1 Avant	86→90									LG		[-]	**PF0116**	87×66,7×16,5	OK032
2.2	10/79→08/83									LG		[-]	**PF0116**	87×66,7×16,5	OK032
2.2 5E - 5T	→81									LG		[-]	**PF0116**	87×66,7×16,5	OK032
2.2 Avant	86→90									LG		[-]	**PF0116**	87×66,7×16,5	OK032
2.3 Avant	86→90									LG		[-]	**PF0116**	87×66,7×16,5	OK032
200 Quattro															
Turbo Quattro	90→82									LG		[-]	**PF0116**	87×66,7×16,5	OK032
2.1 Quattro	08/83→88									LG		[-]	**PF0116**	87×66,7×16,5	OK032
2.1 Quattro Avant	86→90									LG		[-]	**PF0116**	87×66,7×16,5	OK032
2.2 Quattro	08/83→88									LG		[-]	**PF0116**	87×66,7×16,5	OK032
2.2 Quattro Avant	86→90									LG		[-]	**PF0116**	87×66,7×16,5	OK032
2.3 Quattro Avant	86→90									LG		[-]	**PF0116**	87×66,7×16,5	OK032
A1 (8X1)															
1.2 TFSI	05/10→	63	86	ATE	Ø Disc 228×25	[+]	**PF0135**	155,1×66×20,1		LG		[-]	**PF0131**	87×53×17	OK039/ OK041
1.2 TFSI	05/10→	63	86	ATE		[+]	**PF0132**	146×54,7×19,5		BSC	1KS/ØDisc 272×16	[-]	**PF0441**	109,2×53,3×17,5	OK033
1.4 TFSI	01/11→	136	185	ATE	Ø Disc 228×25	[+]	**PF0135**	155,1×66×20,1		LG		[-]	**PF0131**	87×53×17	OK039/ OK041

		KW	CV													
				SiS	i	W.i.	MAGNETI MARELLI	W×H×Th (mm)	Extra kit [Opt]	SiS	i	W.i.	MAGNETI MARELLI	W×H×Th (mm)	Extra kit [Opt]
AUDI																
A1 (8X1)																
1.4 TFSI	01/11→	136	185	ATE		[+]	**PF0132**	146×54,7×19,5		BSC	1KS/ØDisc 272×16	[-]	**PF0441**	109,2×53,3×17,5	OK033
1.4 TFSI	05/10→	90	122	ATE	Ø Disc 228×25	[+]	**PF0135**	155,1×66×20,1		LG		[-]	**PF0131**	87×53×17	OK039/ OK041
1.4 TFSI	05/10→	90	122	ATE		[+]	**PF0132**	146×54,7×19,5		BSC	1KS/ØDisc 272×16	[-]	**PF0441**	109,2×53,3×17,5	OK033
1.6 TDI	03/11→	66	90	ATE	Ø Disc 228×25	[+]	**PF0135**	155,1×66×20,1		LG		[-]	**PF0131**	87×53×17	OK039/ OK041
1.6 TDI	03/11→	66	90	ATE		[+]	**PF0132**	146×54,7×19,5		BSC	1KS/ØDisc 272×16	[-]	**PF0441**	109,2×53,3×17,5	OK033
1.6 TDI	05/10→	77	105	ATE	Ø Disc 228×25	[+]	**PF0135**	155,1×66×20,1		LG		[-]	**PF0131**	87×53×17	OK039/ OK041
1.6 TDI	05/10→	77	105	ATE		[+]	**PF0132**	146×54,7×19,5		BSC	1KS/ØDisc 272×16	[-]	**PF0441**	109,2×53,3×17,5	OK033
2.0 TDI	09/11→	105	143	ATE	Ø Disc 228×25	[+]	**PF0135**	155,1×66×20,1		LG		[-]	**PF0131**	87×53×17	OK039/ OK041
2.0 TDI	09/11→	105	143	ATE		[+]	**PF0132**	146×54,7×19,5		BSC	1KS/ØDisc 272×16	[-]	**PF0441**	109,2×53,3×17,5	OK033
A1 Sportback (8XA)																
1.2 TFSI	05/10→	63	86	ATE	Ø Disc 228×25	[+]	**PF0135**	155,1×66×20,1		LG		[-]	**PF0131**	87×53×17	OK039/ OK041
1.2 TFSI	05/10→	63	86	ATE		[+]	**PF0132**	146×54,7×19,5		BSC	1KS/ØDisc 272×16	[-]	**PF0441**	109,2×53,3×17,5	OK033
1.4 TFSI	05/10→	90	122	ATE	Ø Disc 228×25	[+]	**PF0135**	155,1×66×20,1		LG		[-]	**PF0131**	87×53×17	OK039/ OK041
1.4 TFSI	05/10→	90	122	ATE		[+]	**PF0132**	146×54,7×19,5		BSC	1KS/ØDisc 272×16	[-]	**PF0441**	109,2×53,3×17,5	OK033
1.6 TDI	03/11→			ATE	Ø Disc 228×25	[+]	**PF0135**	155,1×66×20,1		LG		[-]	**PF0131**	87×53×17	OK039/ OK041
1.6 TDI	03/11→			ATE		[+]	**PF0132**	146×54,7×19,5		BSC	1KS/ØDisc 272×16	[-]	**PF0441**	109,2×53,3×17,5	OK033
2.0 TDI	09/11→	105	143	ATE	Ø Disc 228×25	[+]	**PF0135**	155,1×66×20,1		LG		[-]	**PF0131**	87×53×17	OK039/ OK041
2.0 TDI	09/11→	105	143	ATE		[+]	**PF0132**	146×54,7×19,5		BSC	1KS/ØDisc 272×16	[-]	**PF0441**	109,2×53,3×17,5	OK033
A2 (8Z0)																
1.2 TDI	03/01→08/05	45	61	ATE	Ø Disc 256×22	[+]	**PF0516**	146×54,7×19,5		LG		[+]	**PF0442**	87×53×17	OK039
1.2 TDI	03/01→08/05	45	61	ATE		[+]	**PF0535**	141,8×48,1×14,3		LG		[+]	**PF0442**	87×53×17	OK039
1.4 TDI	02/00→08/05	55	75	ATE	Ø Disc 256×22	[+]	**PF0516**	146×54,7×19,5		LG		[+]	**PF0442**	87×53×17	OK039
1.4 TDI	02/00→08/05	55	75	ATE		[+]	**PF0536**	141,8×48,1×14,3		LG		[+]	**PF0442**	87×53×17	OK039
1.4	02/00→08/05	55	75	ATE	Ø Disc 256×22	[+]	**PF0516**	146×54,7×19,5		LG		[+]	**PF0442**	87×53×17	OK039

		KW	CV	SiS	i	W.i.	MAGNETI MARELLI	W×H×Th (mm)	Extra kit [Opt]	SiS	i	W.i.	MAGNETI MARELLI	W×H×Th (mm)	Extra kit [Opt]
AUDI															
A2 (8Z0)															
1.4 TDI	11/03 → 08/05	66	90	ATE		[+]	**PF0535**	141,8×48,1×14,3		LG		[+]	**PF0442**	87×53×17	OK039
1.6 FSI	05/02 → 08/05	81	110	ATE		[+]	**PF0535**	141,8×48,1×14,3		LG		[+]	**PF0442**	87×53×17	OK039
A3 I (8L1)															
1.6	99 →			ATE		[+]	**PF0516**	146×54,7×19,5		LG		[-]	**PF0131**	87×53×17	OK039/ OK041
1.6	96 → 99			ATE	Ø Disc 256×22	[-]	**PF0515**	146×54,7×19,5		LG		[-]	**PF0131**	87×53×17	OK039/ OK041
1.6	99 →			ATE	Ø Disc 256×22	[+]	**PF0516**	146×54,7×19,5		LG		[-]	**PF0131**	87×53×17	OK039/ OK041
1.6	96 → 99			ATE	Ø Disc 280×22	[-]	**PF0134**	146×54,7×19,5		LG		[-]	**PF0131**	87×53×17	OK039/ OK041
1.6	99 →			ATE	Ø Disc 280×22	[+]	**PF0516**	146×54,7×19,5		LG		[-]	**PF0131**	87×53×17	OK039/ OK041
1.8	96 → 99			KH		[-]	**PF0390**	137,8×49×19,5		LG		[-]	**PF0131**	87×53×17	OK039/ OK041
1.8	99 →			ATE		[+]	**PF0516**	146×54,7×19,5		LG		[-]	**PF0131**	87×53×17	OK039/ OK041
1.8	96 → 99			ATE	Ø Disc 256×22	[-]	**PF0515**	146×54,7×19,5		LG		[-]	**PF0131**	87×53×17	OK039/ OK041
1.8	99 →			ATE	Ø Disc 256×22	[+]	**PF0516**	146×54,7×19,5		LG		[-]	**PF0131**	87×53×17	OK039/ OK041
1.8	96 → 99			ATE	Ø Disc 280×22	[-]	**PF0134**	146×54,7×19,5		LG		[-]	**PF0131**	87×53×17	OK039/ OK041
1.8	99 →			ATE	Ø Disc 280×22	[+]	**PF0516**	146×54,7×19,5		LG		[-]	**PF0131**	87×53×17	OK039/ OK041
1.8 T.	96 → 99			ATE	Ø Disc 288×25	[-]	**PF0260**	156,4×74,2×19		LG		[-]	**PF0131**	87×53×17	OK039/ OK041
1.8 T.	99 →			ATE		[+]	**PF0516**	146×54,7×19,5		LG		[-]	**PF0131**	87×53×17	OK039/ OK041
1.8i T.	96 →			ATE	Ø Disc 288×25	[-]	**PF0137**	156,4×74,2×19		LG		[-]	**PF0131**	87×53×17	OK039/ OK041
1.8 T. Quattro	97 →			ATE		[+]	**PF0136**	156,4×74,2×19		LG		[-]	**PF0131**	87×53×17	OK039/ OK041
1.8 T. Quattro	99 →			ATE	Ø Disc 288×25	[+]	**PF0136**	156,4×74,2×19		LG		[-]	**PF0131**	87×53×17	OK039/ OK041
1.8 T. Quattro S3	99 →			ATE	Ø Disc 288×25	[+]	**PF0136**	156,4×74,2×19		LG		[-]	**PF0131**	87×53×17	OK039/ OK041
1.9 TDI	96 → 99			KH		[-]	**PF0390**	137,8×49×19,5		LG		[-]	**PF0131**	87×53×17	OK039/ OK041
1.9 TDI	99 →			ATE		[+]	**PF0516**	146×54,7×19,5		LG		[-]	**PF0131**	87×53×17	OK039/ OK041
1.9 TDI	96 → 99			ATE	Ø Disc 256×22	[-]	**PF0515**	146×54,7×19,5		LG		[-]	**PF0131**	87×53×17	OK039/ OK041

		KW	CV	SiS	i	W.i.	MAGNETI MARELLI	W×H×Th (mm)	Extra kit [Opt]	SiS	i	W.i.	MAGNETI MARELLI	W×H×Th (mm)	Extra kit [Opt]
AUDI															
A3 I (8L1)															
1.9 TDI	99→			ATE	Ø Disc 256×22	[+]	**PF0516**	146×54,7×19,5		LG		[-]	**PF0131**	87×53×17	OK039/ OK041
1.9 TDI	96→99			ATE	Ø Disc 280×22	[-]	**PF0134**	146×54,7×19,5		LG		[-]	**PF0131**	87×53×17	OK039/ OK041
1.9 TDI	99→			ATE	Ø Disc 280×22	[+]	**PF0516**	146×54,7×19,5		LG		[-]	**PF0131**	87×53×17	OK039/ OK041
A3 II (8P1-1K)															
1.6i	06/03→12			ATE		[+]	**PF0135**	155,1×66×20,1		LG	Ø Disc 256×12/1KF	[-]	**PF0444**	87×53×17	OK039
1.6i	06/03→12			ATE		[+]	**PF0132**	146×54,7×19,5		LG	Ø Disc 272×10	[-]	**PF0133**	105,5×56×17	OK039/ OK085
1.9 TDI	06/03→12			ATE		[+]	**PF0135**	155,1×66×20,1		LG	Ø Disc 256×12/1KF	[-]	**PF0444**	87×53×17	OK039
1.9 TDI	06/03→12			ATE		[+]	**PF0132**	146×54,7×19,5		LG	Ø Disc 272×10	[-]	**PF0133**	105,5×56×17	OK039/ OK085
2.0i 16V	06/03→12			ATE		[+]	**PF0135**	155,1×66×20,1		LG	Ø Disc 256×12/1KF	[-]	**PF0444**	87×53×17	OK039
2.0i 16V	06/03→12			ATE		[+]	**PF0132**	146×54,7×19,5		LG	Ø Disc 272×10	[-]	**PF0133**	105,5×56×17	OK039/ OK085
2.0 TDI	06/03→12			ATE		[+]	**PF0135**	155,1×66×20,1		LG	Ø Disc 256×12/1KF	[-]	**PF0444**	87×53×17	OK039
2.0 TDI	06/03→12			ATE		[+]	**PF0132**	146×54,7×19,5		LG	Ø Disc 272×10	[-]	**PF0133**	105,5×56×17	OK039/ OK085
A3 Cabriolet															
1.2 TFSI	03/10→	77	105	ATE		[+]	**PF0132**	146×54,7×19,5		BSC	1KS/ØDisc 272×16	[-]	**PF0441**	109,2×53,3×17,5	OK033
1.2 TFSI	03/10→	77	105	ATE		[+]	**PF0132**	146×54,7×19,5		LG		[-]	**PF0131**	87×53×17	OK039/ OK041
1.4 TFSI	02/11→	92	125	ATE		[+]	**PF0132**	146×54,7×19,5		BSC	1KS/ØDisc 272×16	[-]	**PF0441**	109,2×53,3×17,5	OK033
1.4 TFSI	02/11→	92	125	ATE		[+]	**PF0132**	146×54,7×19,5		LG		[-]	**PF0131**	87×53×17	OK039/ OK041
1.6	09/08→	75	102	ATE		[+]	**PF0132**	146×54,7×19,5		BSC	1KS/ØDisc 272×16	[-]	**PF0441**	109,2×53,3×17,5	OK033
1.6	09/08→	75	102	ATE		[+]	**PF0132**	146×54,7×19,5		LG		[-]	**PF0131**	87×53×17	OK039/ OK041
1.6	08/08→	74	101	ATE		[+]	**PF0132**	146×54,7×19,5		BSC	1KS/ØDisc 272×16	[-]	**PF0441**	109,2×53,3×17,5	OK033
1.6	08/08→	74	101	ATE		[+]	**PF0132**	146×54,7×19,5		LG		[-]	**PF0131**	87×53×17	OK039/ OK041
1.6 TDI	05/09→	77	105	ATE		[+]	**PF0132**	146×54,7×19,5		BSC	1KS/ØDisc 272×16	[-]	**PF0441**	109,2×53,3×17,5	OK033
1.6 TDI	05/09→	77	105	ATE		[+]	**PF0132**	146×54,7×19,5		LG		[-]	**PF0131**	87×53×17	OK039/ OK041

		KW	CV													
				SiS	i	W.i.	MAGNETI MARELLI	W×H×Th (mm)	Extra kit [Opt]	SiS	i	W.i.	MAGNETI MARELLI	W×H×Th (mm)	Extra kit [Opt]
AUDI															
A3 Cabriolet															
1.8 TFSI	04/08→	118	160	ATE		[+]	**PF0135**	155,1×66×20,1		BSC	1KS/ØDisc 272×16	[-]	**PF0441**	109,2×53,3×17,5	OK033
1.8 TFSI	04/08→	118	160	ATE		[+]	**PF0132**	146×54,7×19,5		LG		[-]	**PF0133**	105,5×56×17	OK039/ OK085
1.9 TDI	04/08→	77	105	ATE		[+]	**PF0135**	155,1×66×20,1		BSC	1KS/ØDisc 272×16	[-]	**PF0441**	109,2×53,3×17,5	OK033
1.9 TDI	04/08→	77	105	ATE		[+]	**PF0132**	146×54,7×19,5		LG		[-]	**PF0133**	105,5×56×17	OK039/ OK085
2.0 TFSI	04/08→	147	200	ATE	1ZE	[+]	**PF0135**	155,1×66×20,1		BSC	1KS/ØDisc 272×16	[-]	**PF0441**	109,2×53,3×17,5	OK033
2.0 TFSI	04/08→	147	200	ATE		[+]	**PF0132**	146×54,7×19,5		LG		[-]	**PF0133**	105,5×56×17	OK039/ OK085
2.0 TDI	04/08→	103	140	ATE	1ZE,1LJ	[+]	**PF0135**	155,1×66×20,1		BSC	1KS/ØDisc 272×16	[-]	**PF0441**	109,2×53,3×17,5	OK033
2.0 TDI	04/08→	103	140	ATE		[+]	**PF0132**	146×54,7×19,5		LG		[-]	**PF0133**	105,5×56×17	OK039/ OK085
2.0 TDI	04/08→	100	136	ATE	1ZE,1LJ	[+]	**PF0135**	155,1×66×20,1		BSC	1KS/ØDisc 272×16	[-]	**PF0441**	109,2×53,3×17,5	OK033
2.0 TDI	04/08→	100	136	ATE		[+]	**PF0132**	146×54,7×19,5		LG		[-]	**PF0133**	105,5×56×17	OK039/ OK085
A3 Sportback (8PA)															
1.2 TSI	04/10→	77	105	ATE		[+]	**PF0132**	146×54,7×19,5		LG	Ø Disc 255×10	[-]	**PF0131**	87×53×17	OK039/ OK041
1.4 TFSI	09/07→	92	125	ATE		[+]	**PF0132**	146×54,7×19,5		LG	Ø Disc 255×10	[-]	**PF0131**	87×53×17	OK039/ OK041
1.6	09/04→	75	102	ATE		[+]	**PF0132**	146×54,7×19,5		LG	Ø Disc 255×10	[-]	**PF0131**	87×53×17	OK039/ OK041
1.6 E-Power	01/11→	75	102	ATE		[+]	**PF0132**	146×54,7×19,5		LG	Ø Disc 255×10	[-]	**PF0131**	87×53×17	OK039/ OK041
1.6	09/04→	75	102	ATE	Ø Disc 288×25/ 312×25	[+]	**PF0135**	155,1×66×20,1		LG	Ø Disc 260×12	[-]	**PF0133**	105,5×56×17	OK039/ OK085
1.6 FSI	09/04→	85	115	ATE		[+]	**PF0132**	146×54,7×19,5		LG	Ø Disc 255×10	[-]	**PF0131**	87×53×17	OK039/ OK041
1.6 FSI	09/04→	85	115	ATE	Ø Disc 288×25/ 312×25	[+]	**PF0135**	155,1×66×20,1		LG	Ø Disc 260×12	[-]	**PF0133**	105,5×56×17	OK039/ OK085
1.6 TDI	05/09→	66	90	ATE		[+]	**PF0132**	146×54,7×19,5		LG	Ø Disc 255×10	[-]	**PF0131**	87×53×17	OK039/ OK041
1.6 TDI	05/09→	66	90	ATE	Ø Disc 288×25/ 312×25	[+]	**PF0135**	155,1×66×20,1		LG	Ø Disc 260×12	[-]	**PF0133**	105,5×56×17	OK039/ OK085
1.6 TDI	05/09→	77	105	ATE		[+]	**PF0132**	146×54,7×19,5		LG	Ø Disc 255×10	[-]	**PF0131**	87×53×17	OK039/ OK041

		KW	CV	SiS	i	W.i.	MAGNETI MARELLI	W×H×Th (mm)	Extra kit [Opt]	SiS	i	W.i.	MAGNETI MARELLI	W×H×Th (mm)	Extra kit [Opt]
AUDI															
A3 Sportback (8PA)															
1.6 TDI	05/09→	77	105	ATE	Ø Disc 288×25/ 312×25	[+]	**PF0135**	155,1×66×20,1		LG	Ø Disc 260×12	[-]	**PF0133**	105,5×56×17	OK039/ OK085
1.8 TFSI	11/06→	118	160	ATE		[+]	**PF0132**	146×54,7×19,5		LG	Ø Disc 255×10	[-]	**PF0131**	87×53×17	OK039/ OK041
1.8 TFSI	11/06→	118	160	ATE	Ø Disc 288×25/ 312×25	[+]	**PF0135**	155,1×66×20,1		LG	Ø Disc 260×12	[-]	**PF0133**	105,5×56×17	OK039/ OK085
1.8 TFSI Quattro	07/08→	118	160	ATE		[+]	**PF0132**	146×54,7×19,5		LG	Ø Disc 255×10	[-]	**PF0131**	87×53×17	OK039/ OK041
1.8 TFSI Quattro	07/08→	118	160	ATE	Ø Disc 288×25/ 312×25	[+]	**PF0135**	155,1×66×20,1		LG	Ø Disc 260×12	[-]	**PF0133**	105,5×56×17	OK039/ OK085
1.9 TDI	09/04→	77	105	ATE		[+]	**PF0132**	146×54,7×19,5		LG	Ø Disc 255×10	[-]	**PF0131**	87×53×17	OK039/ OK041
1.9 TDI	09/04→	77	105	ATE	Ø Disc 288×25/ 312×25	[+]	**PF0135**	155,1×66×20,1		LG	Ø Disc 260×12	[-]	**PF0133**	105,5×56×17	OK039/ OK085
2.0	06/06→	120	163	ATE		[+]	**PF0132**	146×54,7×19,5		LG	Ø Disc 255×10	[-]	**PF0131**	87×53×17	OK039/ OK041
2.0	06/06→	120	163	ATE	Ø Disc 288×25/ 312×25	[+]	**PF0135**	155,1×66×20,1		LG	Ø Disc 260×12	[-]	**PF0133**	105,5×56×17	OK039/ OK085
2.0 FSI	09/04→	110	150	ATE		[+]	**PF0132**	146×54,7×19,5		LG	Ø Disc 255×10	[-]	**PF0131**	87×53×17	OK039/ OK041
2.0 FSI	09/04→	110	150	ATE	Ø Disc 288×25/ 312×25	[+]	**PF0135**	155,1×66×20,1		LG	Ø Disc 260×12	[-]	**PF0133**	105,5×56×17	OK039/ OK085
2.0 TFSI	09/04→	147	200	ATE		[+]	**PF0132**	146×54,7×19,5		LG	Ø Disc 255×10	[-]	**PF0131**	87×53×17	OK039/ OK041
2.0 TFSI	09/04→	147	200	ATE	Ø Disc 288×25/ 312×25	[+]	**PF0135**	155,1×66×20,1		LG	Ø Disc 260×12	[-]	**PF0133**	105,5×56×17	OK039/ OK085
2.0 TFSI Quattro	09/04→	147	200	ATE		[+]	**PF0132**	146×54,7×19,5		LG	Ø Disc 260×12	[-]	**PF0133**	105,5×56×17	OK039/ OK085
2.0 TFSI Quattro	09/04→	147	200	ATE	Ø Disc 288×25/ 312×25	[+]	**PF0135**	155,1×66×20,1		LG	Ø Disc 260×12	[-]	**PF0133**	105,5×56×17	OK039/ OK085
2.0 TDI	09/04→	100	136	ATE		[+]	**PF0132**	146×54,7×19,5		LG	Ø Disc 255×10	[-]	**PF0131**	87×53×17	OK039/ OK041
2.0 TDI	09/04→	100	136	ATE	Ø Disc 288×25/ 312×25	[+]	**PF0135**	155,1×66×20,1		LG	Ø Disc 260×12	[-]	**PF0133**	105,5×56×17	OK039/ OK085

		KW	CV	SiS	i	W.i.	MAGNETI MARELLI	W×H×Th (mm)	Extra kit [Opt]	SiS	i	W.i.	MAGNETI MARELLI	W×H×Th (mm)	Extra kit [Opt]
AUDI															
A3 Sportback (8PA)															
2.0 TDI	03/06→	125	170	ATE		[+]	**PF0132**	146×54,7×19,5		LG	Ø Disc 255×10	[-]	**PF0131**	87×53×17	OK039/ OK041
2.0 TDI	03/06→	125	170	ATE	Ø Disc 288×25/ 312×25	[+]	**PF0135**	155,1×66×20,1		LG	Ø Disc 260×12	[-]	**PF0133**	105,5×56×17	OK039/ OK085
2.0 TDI	06/05→	103	140	ATE		[+]	**PF0132**	146×54,7×19,5		LG	Ø Disc 255×10	[-]	**PF0131**	87×53×17	OK039/ OK041
2.0 TDI	06/05→	103	140	ATE	Ø Disc 288×25/ 312×25	[+]	**PF0135**	155,1×66×20,1		LG	Ø Disc 260×12	[-]	**PF0133**	105,5×56×17	OK039/ OK085
2.0 TDI	06/06→ 06/08	120	163	ATE		[+]	**PF0132**	146×54,7×19,5		LG	Ø Disc 255×10	[-]	**PF0131**	87×53×17	OK039/ OK041
2.0 TDI	06/06→ 06/08	120	163	ATE	Ø Disc 288×25/ 312×25	[+]	**PF0135**	155,1×66×20,1		LG	Ø Disc 260×12	[-]	**PF0133**	105,5×56×17	OK039/ OK085
2.0 TDI Quattro	01/06→	103	140	ATE		[+]	**PF0132**	146×54,7×19,5		LG	Ø Disc 255×10	[-]	**PF0131**	87×53×17	OK039/ OK041
2.0 TDI Quattro	01/06→	103	140	ATE	Ø Disc 288×25/ 312×25	[+]	**PF0135**	155,1×66×20,1		LG	Ø Disc 260×12	[-]	**PF0133**	105,5×56×17	OK039/ OK085
2.0 TDI 16V	09/04→	103	140	ATE		[+]	**PF0132**	146×54,7×19,5		LG	Ø Disc 255×10	[-]	**PF0131**	87×53×17	OK039/ OK041
2.0 TDI 16V	09/04→	103	140	ATE	Ø Disc 288×25/ 312×25	[+]	**PF0135**	155,1×66×20,1		LG	Ø Disc 260×12	[-]	**PF0133**	105,5×56×17	OK039/ OK085
2.0 TDI 16V Quattro	11/05→	103	140	ATE		[+]	**PF0132**	146×54,7×19,5		LG	Ø Disc 255×10	[-]	**PF0131**	87×53×17	OK039/ OK041
2.0 TDI 16V Quattro	11/05→	103	140	ATE	Ø Disc 288×25/ 312×25	[+]	**PF0135**	155,1×66×20,1		LG	Ø Disc 260×12	[-]	**PF0133**	105,5×56×17	OK039/ OK085
2.0 TDI Quattro	03/06→	125	170	ATE		[+]	**PF0132**	146×54,7×19,5		LG	Ø Disc 255×10	[-]	**PF0131**	87×53×17	OK039/ OK041
2.0 TDI Quattro	03/06→	125	170	ATE	Ø Disc 288×25/ 312×25	[+]	**PF0135**	155,1×66×20,1		LG	Ø Disc 260×12	[-]	**PF0133**	105,5×56×17	OK039/ OK085
A3 (8V1)															
1.4 TFSI	08/12→	90	122	LG		[+]	**PF0715**	160×64,5×20,3	OK088	ATE	Ø Disc 272×10	[-]	**PF0714**	123×61,2×16	
1.4 TFSI	08/12→	90	122	LG		[o]	**PF0716**	160,2×64,5×20,3	OK088	ATE	Ø Disc 310×22	[-]	**PF0713**	123×61,2×16	
1.4 TFSI	10/12→	103	140	LG		[+]	**PF0715**	160×64,5×20,3	OK088	ATE	Ø Disc 272×10	[-]	**PF0714**	123×61,2×16	
1.4 TFSI	10/12→	103	140	LG		[o]	**PF0716**	160,2×64,5×20,3	OK088	ATE	Ø Disc 310×22	[-]	**PF0713**	123×61,2×16	

		KW	CV	SiS	i	W.i.	MAGNETI MARELLI	W×H×Th (mm)	Extra kit [Opt]	SiS	i	W.i.	MAGNETI MARELLI	W×H×Th (mm)	Extra kit [Opt]
AUDI															
A3 (8V1)															
1.6 TDI	09/12→	77	105	LG		[+]	**PF0715**	160×64,5×20,3	OK088	ATE	Ø Disc 272×10	[-]	**PF0714**	123×61,2×16	
1.6 TDI	09/12→	77	105	LG		[o]	**PF0716**	160,2×64,5×20,3	OK088	ATE	Ø Disc 310×22	[-]	**PF0713**	123×61,2×16	
1.6 TDI	09/13→	81	110	LG		[+]	**PF0715**	160×64,5×20,3	OK088	ATE	Ø Disc 272×10	[-]	**PF0714**	123×61,2×16	
1.6 TDI	09/13→	81	110	LG		[o]	**PF0716**	160,2×64,5×20,3	OK088	ATE	Ø Disc 310×22	[-]	**PF0713**	123×61,2×16	
1.8 TFSI	08/12→	132	180	LG		[+]	**PF0715**	160×64,5×20,3	OK088	ATE	Ø Disc 272×10	[-]	**PF0714**	123×61,2×16	
1.8 TFSI	08/12→	132	180	LG		[o]	**PF0716**	160,2×64,5×20,3	OK088	ATE	Ø Disc 310×22	[-]	**PF0713**	123×61,2×16	
2.0 TDI	01/13→	81	110	LG		[+]	**PF0715**	160×64,5×20,3	OK088	ATE	Ø Disc 272×10	[-]	**PF0714**	123×61,2×16	
2.0 TDI	01/13→	81	110	LG		[o]	**PF0716**	160,2×64,5×20,3	OK088	ATE	Ø Disc 310×22	[-]	**PF0713**	123×61,2×16	
2.0 TDI	08/12→	105	143	LG		[+]	**PF0715**	160×64,5×20,3	OK088	ATE	Ø Disc 272×10	[-]	**PF0714**	123×61,2×16	
2.0 TDI	08/12→	105	143	LG		[o]	**PF0716**	160,2×64,5×20,3	OK088	ATE	Ø Disc 310×22	[-]	**PF0713**	123×61,2×16	
2.0 TDI	08/12→	110	150	LG		[+]	**PF0715**	160×64,5×20,3	OK088	ATE	Ø Disc 272×10	[-]	**PF0714**	123×61,2×16	
2.0 TDI	08/12→	110	150	LG		[o]	**PF0716**	160,2×64,5×20,3	OK088	ATE	Ø Disc 310×22	[-]	**PF0713**	123×61,2×16	
2.0 TDI	12/12→	135	184	LG		[+]	**PF0715**	160×64,5×20,3	OK088	ATE	Ø Disc 272×10	[-]	**PF0714**	123×61,2×16	
2.0 TDI	12/12→	135	184	LG		[o]	**PF0716**	160,2×64,5×20,3	OK088	ATE	Ø Disc 310×22	[-]	**PF0713**	123×61,2×16	
2.0 TDI 4Motion	10/12→	110	150	LG		[+]	**PF0715**	160×64,5×20,3	OK088	ATE	Ø Disc 272×10	[-]	**PF0714**	123×61,2×16	
2.0 TDI 4Motion	10/12→	110	150	LG		[o]	**PF0716**	160,2×64,5×20,3	OK088	ATE	Ø Disc 310×22	[-]	**PF0713**	123×61,2×16	
2.0 TDI 4Motion	12/12→	135	184	LG		[+]	**PF0715**	160×64,5×20,3	OK088	ATE	Ø Disc 272×10	[-]	**PF0714**	123×61,2×16	
2.0 TDI 4Motion	12/12→	135	184	LG		[o]	**PF0716**	160,2×64,5×20,3	OK088	ATE	Ø Disc 310×22	[-]	**PF0713**	123×61,2×16	
S3 8V	10/12→									ATE	Ø Disc 272×10	[-]	**PF0714**	123×61,2×16	
A3 2 Volumi (8VA)															
1.4 TFSI	09/12→	90	122	LG		[+]	**PF0715**	160×64,5×20,3	OK088	ATE	Ø Disc 272×10	[-]	**PF0714**	123×61,2×16	
1.4 TFSI	09/12→	90	122	LG		[o]	**PF0716**	160,2×64,5×20,3	OK088	ATE	Ø Disc 310×22	[-]	**PF0713**	123×61,2×16	

		KW	CV													
				SiS	i	W.i.	MAGNETI MARELLI	W×H×Th (mm)	Extra kit [Opt]	SiS	i	W.i.	MAGNETI MARELLI	W×H×Th (mm)	Extra kit [Opt]
AUDI																
A3 2 Volumi (8VA)																
1.4 TFSI g-tron	13→	81	110	LG		[+]	**PF0715**	160×64,5×20,3	OK088	ATE	Ø Disc 272×10	[-]	**PF0714**	123×61,2×16	
1.4 TFSI g-tron	13→	81	110	LG		[o]	**PF0716**	160,2×64,5×20,3	OK088	ATE	Ø Disc 310×22	[-]	**PF0713**	123×61,2×16	
1.6 TDI	09/13→	81	110	LG		[+]	**PF0715**	160×64,5×20,3	OK088	ATE	Ø Disc 272×10	[-]	**PF0714**	123×61,2×16	
1.6 TDI	09/13→	81	110	LG		[o]	**PF0716**	160,2×64,5×20,3	OK088	ATE	Ø Disc 310×22	[-]	**PF0713**	123×61,2×16	
1.8 TFSI	09/12→	132	180	LG		[+]	**PF0715**	160×64,5×20,3	OK088	ATE	Ø Disc 272×10	[-]	**PF0714**	123×61,2×16	
1.8 TFSI	09/12→	132	180	LG		[o]	**PF0716**	160,2×64,5×20,3	OK088	ATE	Ø Disc 310×22	[-]	**PF0713**	123×61,2×16	
2.0 TDI	03/13→	105	143	LG		[+]	**PF0715**	160×64,5×20,3	OK088	ATE	Ø Disc 272×10	[-]	**PF0714**	123×61,2×16	
2.0 TDI	03/13→	105	143	LG		[o]	**PF0716**	160,2×64,5×20,3	OK088	ATE	Ø Disc 310×22	[-]	**PF0713**	123×61,2×16	
2.0 TDI	09/12→	110	150	LG		[+]	**PF0715**	160×64,5×20,3	OK088	ATE	Ø Disc 272×10	[-]	**PF0714**	123×61,2×16	
2.0 TDI	09/12→	110	150	LG		[o]	**PF0716**	160,2×64,5×20,3	OK088	ATE	Ø Disc 310×22	[-]	**PF0713**	123×61,2×16	
2.0 TDI 4Motion	11/12→	135	184	LG		[+]	**PF0715**	160×64,5×20,3	OK088	ATE	Ø Disc 272×10	[-]	**PF0714**	123×61,2×16	
2.0 TDI 4Motion	11/12→	135	184	LG		[o]	**PF0716**	160,2×64,5×20,3	OK088	ATE	Ø Disc 310×22	[-]	**PF0713**	123×61,2×16	
S3 8V	10/12→									ATE	Ø Disc 272×10	[-]	**PF0714**	123×61,2×16	
A3 3 Volumi (8VS)																
1.4 TFSI	05/13→	103	140	LG		[+]	**PF0715**	160×64,5×20,3	OK088	ATE	Ø Disc 272×10	[-]	**PF0714**	123×61,2×16	
1.4 TFSI	05/13→	103	140	LG		[o]	**PF0716**	160,2×64,5×20,3	OK088	ATE	Ø Disc 310×22	[-]	**PF0713**	123×61,2×16	
1.8 TFSI	11/13→	125	170	LG		[+]	**PF0715**	160×64,5×20,3	OK088	ATE	Ø Disc 272×10	[-]	**PF0714**	123×61,2×16	
1.8 TFSI	11/13→	125	170	LG		[o]	**PF0716**	160,2×64,5×20,3	OK088	ATE	Ø Disc 310×22	[-]	**PF0713**	123×61,2×16	
1.8 TFSI	05/13→	132	180	LG		[+]	**PF0715**	160×64,5×20,3	OK088	ATE	Ø Disc 272×10	[-]	**PF0714**	123×61,2×16	
1.8 TFSI	05/13→	132	180	LG		[o]	**PF0716**	160,2×64,5×20,3	OK088	ATE	Ø Disc 310×22	[-]	**PF0713**	123×61,2×16	
2.0 TDI	05/13→	81	110	LG		[+]	**PF0715**	160×64,5×20,3	OK088	ATE	Ø Disc 272×10	[-]	**PF0714**	123×61,2×16	
2.0 TDI	05/13→	81	110	LG		[o]	**PF0716**	160,2×64,5×20,3	OK088	ATE	Ø Disc 310×22	[-]	**PF0713**	123×61,2×16	

		KW	CV	SiS	i	W.i.	MAGNETI MARELLI	W×H×Th (mm)	Extra kit [Opt]	SiS	i	W.i.	MAGNETI MARELLI	W×H×Th (mm)	Extra kit [Opt]
AUDI															
A3 3 Volumi (8VS)															
2.0 TDI	09/13→	100	136	LG		[+]	**PF0715**	160×64,5×20,3	OK088	ATE	Ø Disc 272×10	[-]	**PF0714**	123×61,2×16	
2.0 TDI	09/13→	100	136	LG		[o]	**PF0716**	160,2×64,5×20,3	OK088	ATE	Ø Disc 310×22	[-]	**PF0713**	123×61,2×16	
2.0 TDI	05/13→	110	150	LG		[+]	**PF0715**	160×64,5×20,3	OK088	ATE	Ø Disc 272×10	[-]	**PF0714**	123×61,2×16	
2.0 TDI	05/13→	110	150	LG		[o]	**PF0716**	160,2×64,5×20,3	OK088	ATE	Ø Disc 310×22	[-]	**PF0713**	123×61,2×16	
2.0 TDI	10/13→	110	150	LG	4x4	[+]	**PF0715**	160×64,5×20,3	OK088	ATE	Ø Disc 272×10	[-]	**PF0714**	123×61,2×16	
2.0 TDI	10/13→	110	150	LG	4x4	[o]	**PF0716**	160,2×64,5×20,3	OK088	ATE	Ø Disc 310×22	[-]	**PF0713**	123×61,2×16	
2.0 TDI	05/14→	135	184	LG		[+]	**PF0715**	160×64,5×20,3	OK088	ATE	Ø Disc 272×10	[-]	**PF0714**	123×61,2×16	
2.0 TDI	05/14→	135	184	LG		[o]	**PF0716**	160,2×64,5×20,3	OK088	ATE	Ø Disc 310×22	[-]	**PF0713**	123×61,2×16	
2.0 TDI	05/14→	135	184	LG	4x4	[+]	**PF0715**	160×64,5×20,3	OK088	ATE	Ø Disc 272×10	[-]	**PF0714**	123×61,2×16	
2.0 TDI	05/14→	135	184	LG	4x4	[o]	**PF0716**	160,2×64,5×20,3	OK088	ATE	Ø Disc 310×22	[-]	**PF0713**	123×61,2×16	
A3 Cabriolet (8V7)															
1.4 TFSI	13→	103	140	LG		[+]	**PF0715**	160×64,5×20,3	OK088	ATE		[-]	**PF0714**	123×61,2×16	
1.4 TFSI	03/14→	92	125	LG		[+]	**PF0715**	160×64,5×20,3	OK088	ATE		[-]	**PF0714**	123×61,2×16	
1.6 TDI	03/14→	81	110	LG		[+]	**PF0715**	160×64,5×20,3	OK088	ATE		[-]	**PF0714**	123×61,2×16	
1.8 TFSI	03/14→	132	180	LG		[+]	**PF0715**	160×64,5×20,3	OK088	ATE		[-]	**PF0714**	123×61,2×16	
1.8 TFSI	13→	132	180	LG		[+]	**PF0715**	160×64,5×20,3	OK088	ATE		[-]	**PF0714**	123×61,2×16	
2.0 TDI	03/14→	110	150	LG		[+]	**PF0715**	160×64,5×20,3	OK088	ATE		[-]	**PF0714**	123×61,2×16	
2.0 TDI	13→	110	150	LG		[+]	**PF0715**	160×64,5×20,3	OK088	ATE		[-]	**PF0714**	123×61,2×16	
S3	04/14→	221	300	LG	4x4	[+]	**PF0715**	160×64,5×20,3	OK088	ATE		[-]	**PF0714**	123×61,2×16	
A4 I (8D2-8D5)															
1.6	11/94→									LG		[-]	**PF0131**	87×53×17	OK039/ OK041
1.6 16V	94→97									LG	←8D-V-168350	[-]	**PF0116**	87×66,7×16,5	OK032
1.6 16V	97→			LG		[-]	**PF0145**	119×69,5×19,4	OK032	LG		[-]	**PF0131**	87×53×17	OK039/ OK041
1.6 16V	97→			LG		[+]	**PF0138**	119×69,5×19,5	OK032	LG		[-]	**PF0131**	87×53×17	OK039/ OK041
1.6 16V	97→			ATE		[+]	**PF0130**	156,4×74,2×19		LG		[-]	**PF0131**	87×53×17	OK039/ OK041
1.6i/Quattro	99→00			LG		[+]	**PF0138**	119×69,5×19,5	OK032	LG		[-]	**PF0131**	87×53×17	OK039/ OK041
1.8 20V	95→			ATE		[+]	**PF0130**	156,4×74,2×19							

		KW	CV	SiS	i	W.i.	MAGNETI MARELLI	W×H×Th (mm)	Extra kit [Opt]	SiS	i	W.i.	MAGNETI MARELLI	W×H×Th (mm)	Extra kit [Opt]
AUDI															
A4 I (8D2-8D5)															
1.8 20V/ Quattro	95→			ATE		[+]	**PF0130**	156,4×74,2×19							
1.8i/Quattro	99→00			LG		[+]	**PF0138**	119×69,5×19,5	OK032	LG		[-]	**PF0131**	87×53×17	OK039/ OK041
1.8 T./Quattro	99→00			LG		[+]	**PF0138**	119×69,5×19,5	OK032	LG		[-]	**PF0131**	87×53×17	OK039/ OK041
1.8 T.	00→			LG		[+]	**PF0138**	119×69,5×19,5	OK032	LG		[-]	**PF0131**	87×53×17	OK039/ OK041
1.9 TD	11/94→									LG		[+]	**PF0442**	87×53×17	OK039
1.9 TDI	11/94→									LG		[+]	**PF0442**	87×53×17	OK039
1.9 TDI	97→	66		LG		[-]	**PF0145**	119×69,5×19,4	OK032	LG		[-]	**PF0131**	87×53×17	OK039/ OK041
1.9 TDI	97→	66		LG		[+]	**PF0138**	119×69,5×19,5	OK032	LG		[-]	**PF0131**	87×53×17	OK039/ OK041
1.9 TDI	97→	81		ATE		[+]	**PF0130**	156,4×74,2×19		LG		[-]	**PF0131**	87×53×17	OK039/ OK041
1.9 TDI/ Quattro	99→00			LG		[+]	**PF0138**	119×69,5×19,5	OK032	LG		[-]	**PF0131**	87×53×17	OK039/ OK041
2.0i	00→			LG		[+]	**PF0138**	119×69,5×19,5	OK032	LG		[-]	**PF0131**	87×53×17	OK039/ OK041
2.4i 30V/ Quattro	97→	121		ATE		[+]	**PF0130**	156,4×74,2×19		LG		[-]	**PF0131**	87×53×17	OK039/ OK041
2.5 TDI	08/97→			ATE		[+]	**PF0143**	156,4×74,2×19		LG		[-]	**PF0131**	87×53×17	OK039/ OK041
2.5 TD	97→00			ATE		[+]	**PF0130**	156,4×74,2×19		LG	←8D-X-199999	[-]	**PF0116**	87×66,7×16,5	OK032
2.5 TD TDI/ Quattro	97→00			ATE		[+]	**PF0261**	156,4×74,2×19		LG		[-]	**PF0131**	87×53×17	OK039/ OK041
2.5 V6 TD TDI	97→00			ATE		[+]	**PF0261**	156,4×74,2×19		LG		[-]	**PF0131**	87×53×17	OK039/ OK041
2.5 V6 TD TDI/Tiptronic	97→00			ATE		[+]	**PF0261**	156,4×74,2×19		LG		[-]	**PF0131**	87×53×17	OK039/ OK041
2.5 V6 TD TDI/Tiptronic	00→			ATE		[+]	**PF0136**	156,4×74,2×19		LG		[-]	**PF0131**	87×53×17	OK039/ OK041
2.5 TD TDI/ Tiptronic Quattro	97→00			ATE		[+]	**PF0261**	156,4×74,2×19		LG		[-]	**PF0131**	87×53×17	OK039/ OK041
2.5 TD TDI/ Tiptronic Quattro	00→			ATE		[+]	**PF0136**	156,4×74,2×19		LG		[-]	**PF0131**	87×53×17	OK039/ OK041
2.6i V6	94→	110		ATE		[+]	**PF0130**	156,4×74,2×19		LG	←8D-X-199999	[-]	**PF0116**	87×66,7×16,5	OK032

		KW	CV												
				SiS	i	W.i.	MAGNETI MARELLI	W×H×Th (mm)	Extra kit [Opt]	SiS	i	W.i.	MAGNETI MARELLI	W×H×Th (mm)	Extra kit [Opt]
AUDI															
A4 I (8D2-8D5)															
2.7 RS4 Biturbo Quattro	00→									LG		[+]	**PF0443**	87×53×17	OK030
2.8 V6/Quattro	96→			ATE		[+]	**PF0130**	156,4×74,2×19		LG		[-]	**PF0131**	87×53×17	OK039/ OK041
A4 I Avant (8D2-8D5)															
1.6 16V	94→97									LG	←8D-V-168350	[-]	**PF0116**	87×66,7×16,5	OK032
1.6 16V	97→			LG		[-]	**PF0145**	119×69,5×19,4	OK032	LG		[-]	**PF0131**	87×53×17	OK039/ OK041
1.6 16V	97→			LG		[+]	**PF0138**	119×69,5×19,5	OK032	LG		[-]	**PF0131**	87×53×17	OK039/ OK041
1.8 20V T.	95→			ATE		[+]	**PF0130**	156,4×74,2×19							
1.8 20V T. Quattro	95→			ATE		[+]	**PF0130**	156,4×74,2×19							
1.8i 20V	97→			LG		[-]	**PF0145**	119×69,5×19,4	OK032	LG		[-]	**PF0131**	87×53×17	OK039/ OK041
1.8i 20V	97→			LG		[+]	**PF0138**	119×69,5×19,5	OK032	LG		[-]	**PF0131**	87×53×17	OK039/ OK041
1.8i 20V Quattro	97→			LG		[-]	**PF0145**	119×69,5×19,4	OK032	LG		[-]	**PF0131**	87×53×17	OK039/ OK041
1.9 TDI Quattro	94→97	81		ATE		[+]	**PF0130**	156,4×74,2×19							
1.9 TDI Quattro	97→	85		ATE		[+]	**PF0130**	156,4×74,2×19		LG		[-]	**PF0131**	87×53×17	OK039/ OK041
2.5 TD	97→00			ATE		[+]	**PF0130**	156,4×74,2×19		LG	←8D-X-199999	[-]	**PF0116**	87×66,7×16,5	OK032
2.5 TD TDI/ Quattro	97→00			ATE		[+]	**PF0261**	156,4×74,2×19		LG		[-]	**PF0131**	87×53×17	OK039/ OK041
2.5 V6 TD TDI	97→00			ATE		[+]	**PF0261**	156,4×74,2×19		LG		[-]	**PF0131**	87×53×17	OK039/ OK041
2.5 V6 TD TDI/Tiptronic	97→00			ATE		[+]	**PF0261**	156,4×74,2×19		LG		[-]	**PF0131**	87×53×17	OK039/ OK041
2.5 V6 TD TDI/Tiptronic	00→			ATE		[+]	**PF0136**	156,4×74,2×19		LG		[-]	**PF0131**	87×53×17	OK039/ OK041
2.5 TD TDI/ Tiptronic Quattro	97→00			ATE		[+]	**PF0261**	156,4×74,2×19		LG		[-]	**PF0131**	87×53×17	OK039/ OK041
2.5 TD TDI/ Tiptronic Quattro	00→			ATE		[+]	**PF0136**	156,4×74,2×19		LG		[-]	**PF0131**	87×53×17	OK039/ OK041
2.8 V6 Quattro	96→			ATE		[+]	**PF0130**	156,4×74,2×19		LG		[-]	**PF0131**	87×53×17	OK039/ OK041

		KW	CV	SiS	i	W.i.	MAGNETI MARELLI	W×H×Th (mm)	Extra kit [Opt]	SiS	i	W.i.	MAGNETI MARELLI	W×H×Th (mm)	Extra kit [Opt]
AUDI															
A4 II (8E)															
1.6i	11/00 →			LG		[+]	**PF0138**	119×69,5×19,5	OK032	LG		[-]	**PF0131**	87×53×17	OK039/ OK041
1.8 T.	11/00 →			ATE		[+]	**PF0142**	156,4×74,2×19,5		LG		[+]	**PF0442**	87×53×17	OK039
1.8 T.	11/00 →			ATE		[+]	**PF0143**	156,4×74,2×19		LG		[+]	**PF0442**	87×53×17	OK039
1.8 T. Quattro	11/00 →			ATE		[+]	**PF0142**	156,4×74,2×19,5		LG		[+]	**PF0442**	87×53×17	OK039
1.8 T. Quattro	11/00 →			ATE		[+]	**PF0143**	156,4×74,2×19		LG		[+]	**PF0442**	87×53×17	OK039
1.9 TDI	11/00 →			ATE		[+]	**PF0142**	156,4×74,2×19,5		LG		[+]	**PF0442**	87×53×17	OK039
1.9 TDI	11/00 →			ATE		[+]	**PF0143**	156,4×74,2×19		LG		[+]	**PF0442**	87×53×17	OK039
1.9 TDI	05/01 →			LG		[+]	**PF0138**	119×69,5×19,5	OK032	LG		[+]	**PF0442**	87×53×17	OK039
1.9 TDI Quattro	11/00 →			ATE		[+]	**PF0142**	156,4×74,2×19,5		LG		[+]	**PF0442**	87×53×17	OK039
1.9 TDI Quattro	11/00 →			ATE		[+]	**PF0143**	156,4×74,2×19		LG		[+]	**PF0442**	87×53×17	OK039
2.0i	11/00 →			ATE		[+]	**PF0142**	156,4×74,2×19,5		LG		[+]	**PF0442**	87×53×17	OK039
2.0i	11/00 →			ATE		[+]	**PF0143**	156,4×74,2×19		LG		[+]	**PF0442**	87×53×17	OK039
2.0i Fsi	07/02 →			ATE		[+]	**PF0142**	156,4×74,2×19,5		LG		[+]	**PF0442**	87×53×17	OK039
2.0i FSi	07/02 →			ATE		[+]	**PF0143**	156,4×74,2×19		LG		[+]	**PF0442**	87×53×17	OK039
2.4i	09/01 →			ATE		[+]	**PF0142**	156,4×74,2×19,5		LG		[+]	**PF0442**	87×53×17	OK039
2.4i	09/01 →			ATE		[+]	**PF0143**	156,4×74,2×19		LG		[+]	**PF0442**	87×53×17	OK039
2.5 TDI	08/01 →			ATE		[+]	**PF0142**	156,4×74,2×19,5		LG		[+]	**PF0442**	87×53×17	OK039
2.5 TDI	08/01 →			ATE		[+]	**PF0143**	156,4×74,2×19		LG		[+]	**PF0442**	87×53×17	OK039
2.5 TDI Quattro	08/01 →			ATE		[+]	**PF0142**	156,4×74,2×19,5		LG		[+]	**PF0442**	87×53×17	OK039
2.5 TDI Quattro	08/01 →			ATE		[+]	**PF0143**	156,4×74,2×19		LG		[+]	**PF0442**	87×53×17	OK039
3.0	11/00 →			ATE		[+]	**PF0142**	156,4×74,2×19,5		LG		[+]	**PF0442**	87×53×17	OK039
3.0	11/00 →			ATE		[+]	**PF0143**	156,4×74,2×19		LG		[+]	**PF0442**	87×53×17	OK039
3.0 Quattro	11/00 →			ATE		[+]	**PF0142**	156,4×74,2×19,5		LG		[+]	**PF0442**	87×53×17	OK039
3.0 Quattro	11/00 →			ATE		[+]	**PF0143**	156,4×74,2×19		LG		[+]	**PF0442**	87×53×17	OK039
3.2 Fsi Quattro	01/05 →			ATE		[+]	**PF0609**	156,5×72,9×20		LG		[+]	**PF0603**	116,2×59×17,5	OK039/ OK091
RS4 Quattro	09/05 →			ATE		[+]	**PF0609**	156,5×72,9×20		LG		[+]	**PF0603**	116,2×59×17,5	OK039/ OK091
S4 4.2 V8 Quattro	03 → 10/04			ATE		[+]	**PF0609**	156,5×72,9×20		LG		[+]	**PF0603**	116,2×59×17,5	OK039/ OK091
A4 II Avant (8E)															
1.8 T.	09/01 →			ATE		[+]	**PF0142**	156,4×74,2×19,5		LG		[+]	**PF0442**	87×53×17	OK039
1.8 T.	09/01 →			ATE		[+]	**PF0143**	156,4×74,2×19		LG		[+]	**PF0442**	87×53×17	OK039
1.8 T./Quattro	09/01 →			ATE		[+]	**PF0142**	156,4×74,2×19,5		LG		[+]	**PF0442**	87×53×17	OK039
1.8 T./Quattro	09/01 →			ATE		[+]	**PF0143**	156,4×74,2×19		LG		[+]	**PF0442**	87×53×17	OK039
1.9 TDI	09/01 →			ATE		[+]	**PF0142**	156,4×74,2×19,5		LG		[+]	**PF0442**	87×53×17	OK039
1.9 TDI	09/01 →			ATE		[+]	**PF0143**	156,4×74,2×19		LG		[+]	**PF0442**	87×53×17	OK039
1.9 TDI	05/01 →			LG		[+]	**PF0138**	119×69,5×19,5	OK032	LG		[+]	**PF0442**	87×53×17	OK039
2.0i	09/01 →			ATE		[+]	**PF0142**	156,4×74,2×19,5		LG		[+]	**PF0442**	87×53×17	OK039
2.0i	09/01 →			ATE		[+]	**PF0143**	156,4×74,2×19		LG		[+]	**PF0442**	87×53×17	OK039
2.0 Fsi	09/01 →			ATE		[+]	**PF0142**	156,4×74,2×19,5		LG		[+]	**PF0442**	87×53×17	OK039
2.0 Fsi	09/01 →			ATE		[+]	**PF0143**	156,4×74,2×19		LG		[+]	**PF0442**	87×53×17	OK039
2.4	09/01 →			ATE		[+]	**PF0142**	156,4×74,2×19,5		LG		[+]	**PF0442**	87×53×17	OK039

		KW	CV												
				SiS	i	W.i.	MAGNETI MARELLI	W×H×Th (mm)	Extra kit [Opt]	SiS	i	W.i.	MAGNETI MARELLI	W×H×Th (mm)	Extra kit [Opt]
AUDI															
A4 II Avant (8E)															
2.4	09/01 →			ATE		[+]	**PF0143**	156,4×74,2×19		LG		[+]	**PF0442**	87×53×17	OK039
2.5 TDI	09/01 →			ATE		[+]	**PF0142**	156,4×74,2×19,5		LG		[+]	**PF0442**	87×53×17	OK039
2.5 TDI	09/01 →			ATE		[+]	**PF0143**	156,4×74,2×19		LG		[+]	**PF0442**	87×53×17	OK039
3.0	11/00 →			ATE		[+]	**PF0142**	156,4×74,2×19,5		LG		[+]	**PF0442**	87×53×17	OK039
3.0	11/00 →			ATE		[+]	**PF0143**	156,4×74,2×19		LG		[+]	**PF0442**	87×53×17	OK039
3.0/Quattro	11/00 →			ATE		[+]	**PF0142**	156,4×74,2×19,5		LG		[+]	**PF0442**	87×53×17	OK039
3.0/Quattro	11/00 →			ATE		[+]	**PF0143**	156,4×74,2×19		LG		[+]	**PF0442**	87×53×17	OK039
A4 III (8K)															
1.8 TFSI	01/08 →	88	120	LG	Ø Disc 320	[+]	**PF0140**	188,1×72,9×19		LG		[-]	**PF0141**	116,4×58,5×17,5	OK039
1.8 TFSI	01/08 →	88	120	ATE	Ø Disc 314	[+]	**PF0139**	155,1×66,6×19,5		LG		[-]	**PF0141**	116,4×58,5×17,5	OK039
1.8 TFSI	11/07 →	118	160	LG	Ø Disc 320	[+]	**PF0140**	188,1×72,9×19		LG		[-]	**PF0141**	116,4×58,5×17,5	OK039
1.8 TFSI	11/07 →	118	160	ATE	Ø Disc 314	[+]	**PF0139**	155,1×66,6×19,5		LG		[-]	**PF0141**	116,4×58,5×17,5	OK039
1.8 TFSI Quattro	09/08 →	118	160	LG	Ø Disc 320	[+]	**PF0140**	188,1×72,9×19		LG		[-]	**PF0141**	116,4×58,5×17,5	OK039
1.8 TFSI Quattro	09/08 →	118	160	ATE	Ø Disc 314	[+]	**PF0139**	155,1×66,6×19,5		LG		[-]	**PF0141**	116,4×58,5×17,5	OK039
2.0 TDI	11/07 →			LG	Ø Disc 320	[+]	**PF0140**	188,1×72,9×19		LG		[-]	**PF0141**	116,4×58,5×17,5	OK039
2.0 TDI	06/08 →			ATE	Ø Disc 314	[+]	**PF0139**	155,1×66,6×19,5		LG		[-]	**PF0141**	116,4×58,5×17,5	OK039
2.0 TFSI	06/08 →	132	180	LG	Ø Disc 320	[+]	**PF0140**	188,1×72,9×19		LG		[-]	**PF0141**	116,4×58,5×17,5	OK039
2.0 TFSI	06/08 →	132	180	ATE	Ø Disc 314	[+]	**PF0139**	155,1×66,6×19,5		LG		[-]	**PF0141**	116,4×58,5×17,5	OK039
2.0 Rdi Quattro	11/07 →			LG	Ø Disc 320	[+]	**PF0140**	188,1×72,9×19		LG		[-]	**PF0141**	116,4×58,5×17,5	OK039
2.0 TDI Quattro	01/08 →	125	170	LG	Ø Disc 314	[+]	**PF0140**	188,1×72,9×19		LG		[-]	**PF0141**	116,4×58,5×17,5	OK039
2.0 TDI Quattro	01/08 →	125	170	ATE	Ø Disc 320	[+]	**PF0139**	155,1×66,6×19,5		LG		[-]	**PF0141**	116,4×58,5×17,5	OK039
2.0 TDI Quattro	11/08 →	105	143	LG	Ø Disc 314	[+]	**PF0140**	188,1×72,9×19		LG		[-]	**PF0141**	116,4×58,5×17,5	OK039
2.0 TDI Quattro	11/08 →	105	143	ATE	Ø Disc 320	[+]	**PF0139**	155,1×66,6×19,5		LG		[-]	**PF0141**	116,4×58,5×17,5	OK039
2.7 TDI	11/07 →	140	190	LG	Ø Disc 314	[+]	**PF0140**	188,1×72,9×19		LG		[-]	**PF0141**	116,4×58,5×17,5	OK039
2.7 TDI	11/07 →	140	190	ATE	Ø Disc 320	[+]	**PF0139**	155,1×66,6×19,5		LG		[-]	**PF0141**	116,4×58,5×17,5	OK039
2.7 TDI	11/07 →	120	163	LG	Ø Disc 314	[+]	**PF0140**	188,1×72,9×19		LG		[-]	**PF0141**	116,4×58,5×17,5	OK039
2.7 TDI	11/07 →	120	163	ATE	Ø Disc 320	[+]	**PF0139**	155,1×66,6×19,5		LG		[-]	**PF0141**	116,4×58,5×17,5	OK039
3.0 TDI Quattro	06/08 →	155	211	LG	Ø Disc 314	[+]	**PF0140**	188,1×72,9×19		LG		[-]	**PF0141**	116,4×58,5×17,5	OK039
3.0 TDI Quattro	06/08 →	155	211	ATE	Ø Disc 320	[+]	**PF0139**	155,1×66,6×19,5		LG		[-]	**PF0141**	116,4×58,5×17,5	OK039
3.2 FSI	09/08 →	195	265	LG	Ø Disc 314	[+]	**PF0140**	188,1×72,9×19		LG		[-]	**PF0141**	116,4×58,5×17,5	OK039
3.2 FSI	09/08 →	195	265	ATE	Ø Disc 320	[+]	**PF0139**	155,1×66,6×19,5		LG		[-]	**PF0141**	116,4×58,5×17,5	OK039
3.2 FSI	10/08 →	192	261	LG	Ø Disc 314	[+]	**PF0140**	188,1×72,9×19		LG		[-]	**PF0141**	116,4×58,5×17,5	OK039
3.2 FSI	10/08 →	192	261	ATE	Ø Disc 320	[+]	**PF0139**	155,1×66,6×19,5		LG		[-]	**PF0141**	116,4×58,5×17,5	OK039
3.2 FSI Quattro	11/07 →	195	265	LG	Ø Disc 314	[+]	**PF0140**	188,1×72,9×19		LG		[-]	**PF0141**	116,4×58,5×17,5	OK039
3.2 FSI Quattro	11/07 →	195	265	ATE	Ø Disc 320	[+]	**PF0139**	155,1×66,6×19,5		LG		[-]	**PF0141**	116,4×58,5×17,5	OK039
A4 Avant III (8K)															
1.8 TFSI	11/07 →			LG	Ø Disc 320	[+]	**PF0140**	188,1×72,9×19		LG		[-]	**PF0141**	116,4×58,5×17,5	OK039
1.8 TFSI	06/08 →			ATE	Ø Disc 314	[+]	**PF0139**	155,1×66,6×19,5		LG		[-]	**PF0141**	116,4×58,5×17,5	OK039
2.0 TDI	11/07 →			LG	Ø Disc 320	[+]	**PF0140**	188,1×72,9×19		LG		[-]	**PF0141**	116,4×58,5×17,5	OK039
2.0 TDI	06/08 →			ATE	Ø Disc 314	[+]	**PF0139**	155,1×66,6×19,5		LG		[-]	**PF0141**	116,4×58,5×17,5	OK039
2.0 TFSI	11/07 →			LG	Ø Disc 320	[+]	**PF0140**	188,1×72,9×19		LG		[-]	**PF0141**	116,4×58,5×17,5	OK039
2.0 TFSI	06/08 →			ATE	Ø Disc 314	[+]	**PF0139**	155,1×66,6×19,5		LG		[-]	**PF0141**	116,4×58,5×17,5	OK039

		KW	CV												
				SiS	i	W.i.	MAGNETI MARELLI	W×H×Th (mm)	Extra kit [Opt]	SiS	i	W.i.	MAGNETI MARELLI	W×H×Th (mm)	Extra kit [Opt]
AUDI															
2.0 Rdi Quattro	11/07→			LG	Ø Disc 320	[+]	**PF0140**	188,1×72,9×19		LG		[-]	**PF0141**	116,4×58,5×17,5	OK039
2.0 Rdi Quattro	06/08→			ATE	Ø Disc 314	[+]	**PF0139**	155,1×66,6×19,5		LG		[-]	**PF0141**	116,4×58,5×17,5	OK039
3.2 Fsi	11/07→			LG	Ø Disc 320	[+]	**PF0140**	188,1×72,9×19		LG		[-]	**PF0141**	116,4×58,5×17,5	OK039
3.2 Fsi	06/08→			ATE	Ø Disc 314	[+]	**PF0139**	155,1×66,6×19,5		LG		[-]	**PF0141**	116,4×58,5×17,5	OK039
A4 Allroad (8KH, B8)															
2.0 TDI	09→			LG	Ø Disc 320	[+]	**PF0140**	188,1×72,9×19		LG		[-]	**PF0141**	116,4×58,5×17,5	OK039
2.0 TDI	09→			ATE	Ø Disc 314	[+]	**PF0139**	155,1×66,6×19,5		LG		[-]	**PF0141**	116,4×58,5×17,5	OK039
2.0 TDI	09/13→	140	190	LG	Ø Disc 320/4x4	[+]	**PF0140**	188,1×72,9×19		LG		[-]	**PF0141**	116,4×58,5×17,5	OK039
2.0 TDI	09/13→	140	190	ATE	Ø Disc 314/4x4	[+]	**PF0139**	155,1×66,6×19,5		LG		[-]	**PF0141**	116,4×58,5×17,5	OK039
2.0 TFSI	09→			LG	Ø Disc 320	[+]	**PF0140**	188,1×72,9×19		LG		[-]	**PF0141**	116,4×58,5×17,5	OK039
2.0 TFSI	09→			ATE	Ø Disc 314	[+]	**PF0139**	155,1×66,6×19,5		LG		[-]	**PF0141**	116,4×58,5×17,5	OK039
3.0 TDI	09→			LG	Ø Disc 320	[+]	**PF0140**	188,1×72,9×19		LG		[-]	**PF0141**	116,4×58,5×17,5	OK039
3.0 TDI	09→			ATE	Ø Disc 314	[+]	**PF0139**	155,1×66,6×19,5		LG		[-]	**PF0141**	116,4×58,5×17,5	OK039
A4 Cabriolet (8H)															
1.8 T.	07/02→			ATE		[+]	**PF0142**	156,4×74,2×19,5		LG		[+]	**PF0442**	87×53×17	OK039
1.8 T.	07/02→			ATE	17"	[+]	**PF0609**	156,5×72,9×20		LG		[+]	**PF0442**	87×53×17	OK039
2.4	04/02→			ATE		[+]	**PF0142**	156,4×74,2×19,5		LG		[+]	**PF0442**	87×53×17	OK039
2.4	04/02→			ATE	17"	[+]	**PF0607**	156,5×72,9×20		LG		[+]	**PF0442**	87×53×17	OK039
2.5 TDI	08/02→			ATE		[+]	**PF0142**	156,4×74,2×19,5		LG		[+]	**PF0442**	87×53×17	OK039
2.5 TDI	08/02→			ATE	17"	[+]	**PF0609**	156,5×72,9×20		LG		[+]	**PF0442**	87×53×17	OK039
3.0	04/02→			ATE		[+]	**PF0142**	156,4×74,2×19,5		LG		[+]	**PF0442**	87×53×17	OK039
3.0	04/02→			ATE	17"	[+]	**PF0609**	156,5×72,9×20		LG		[+]	**PF0442**	87×53×17	OK039
A5 (8T3)															
1.8 TFSI	10/07→	125	170	ATE		[+]	**PF0139**	155,1×66,6×19,5		LG	1KW,1KE	[-]	**PF0141**	116,4×58,5×17,5	OK039
1.8 TFSI	05/09→	118	160	ATE		[+]	**PF0139**	155,1×66,6×19,5		LG	1KW,1KE	[-]	**PF0141**	116,4×58,5×17,5	OK039
2.0 TDI	08/08→	125	170	ATE		[+]	**PF0139**	155,1×66,6×19,5		LG	1KW,1KE	[-]	**PF0141**	116,4×58,5×17,5	OK039
2.0 TDI	10/08→	124	168	ATE		[+]	**PF0139**	155,1×66,6×19,5		LG	1KW,1KE	[-]	**PF0141**	116,4×58,5×17,5	OK039
2.0 TDI	08/08→	120	163	ATE		[+]	**PF0139**	155,1×66,6×19,5		LG	1KW,1KE	[-]	**PF0141**	116,4×58,5×17,5	OK039
2.0 TDI	09/13→	140	190	ATE		[+]	**PF0139**	155,1×66,6×19,5		LG	1KW,1KE	[-]	**PF0141**	116,4×58,5×17,5	OK039
2.0 TDI	08/08→	125	170	ATE	4x4	[+]	**PF0139**	155,1×66,6×19,5		LG	1KW,1KE	[-]	**PF0141**	116,4×58,5×17,5	OK039
2.0 TDI	10/08→	124	168	ATE	4x4	[+]	**PF0139**	155,1×66,6×19,5		LG	1KW,1KE	[-]	**PF0141**	116,4×58,5×17,5	OK039
2.0 TDI	09/13→	140	190	ATE	4x4	[+]	**PF0139**	155,1×66,6×19,5		LG	1KW,1KE	[-]	**PF0141**	116,4×58,5×17,5	OK039
2.0 TFSI	11/08→	132	180	ATE		[+]	**PF0139**	155,1×66,6×19,5		LG	1KW,1KE	[-]	**PF0141**	116,4×58,5×17,5	OK039
2.0 TFSI	06/08→	155	211	ATE		[+]	**PF0139**	155,1×66,6×19,5		LG	1KW,1KE	[-]	**PF0141**	116,4×58,5×17,5	OK039
2.0 TFSI	06/08→	155	211	ATE	4x4	[+]	**PF0139**	155,1×66,6×19,5		LG	1KW,1KE	[-]	**PF0141**	116,4×58,5×17,5	OK039
2.7 TDI	06/07→	140	190	ATE		[+]	**PF0139**	155,1×66,6×19,5		LG	1KW,1KE	[-]	**PF0141**	116,4×58,5×17,5	OK039
2.7 TDI	09/07→	120	163	ATE		[+]	**PF0139**	155,1×66,6×19,5		LG	1KW,1KE	[-]	**PF0141**	116,4×58,5×17,5	OK039
3.0 TDI	06/07→	176	240	LG	4x4	[+]	**PF0140**	188,1×72,9×19		LG	1KW,1KE	[-]	**PF0141**	116,4×58,5×17,5	OK039
3.0 TDI	03/08→	155	211	ATE	4x4	[+]	**PF0139**	155,1×66,6×19,5		LG	1KW,1KE	[-]	**PF0141**	116,4×58,5×17,5	OK039
3.2 FSI	06/07→	195	265	LG		[+]	**PF0140**	188,1×72,9×19		LG	1KW,1KE	[-]	**PF0141**	116,4×58,5×17,5	OK039
3.2 FSI	06/07→	195	265	LG	4x4	[+]	**PF0140**	188,1×72,9×19		LG	1KW,1KE	[-]	**PF0141**	116,4×58,5×17,5	OK039

MAGNETI MARELLI

		KW	CV													
				SiS	i	W.i.	MAGNETI MARELLI	W×H×Th (mm)	Extra kit [Opt]	SiS	i	W.i.	MAGNETI MARELLI	W×H×Th (mm)	Extra kit [Opt]
AUDI															
A5 Sportback (8T)															
2.0 TFSI	06/07→			LG	Ø Disc 320	[+]	**PF0140**	188,1×72,9×19		LG	1KW,1KE	[-]	**PF0141**	116,4×58,5×17,5	OK039
2.0 TFSI	09/09→			ATE	Ø Disc 314	[+]	**PF0139**	155,1×66,6×19,5		LG	1KW,1KE	[-]	**PF0141**	116,4×58,5×17,5	OK039
2.0 TDI	06/07→			LG	Ø Disc 320	[+]	**PF0140**	188,1×72,9×19		LG	1KW,1KE	[-]	**PF0141**	116,4×58,5×17,5	OK039
2.0 TDI	09/09→			ATE	Ø Disc 314	[+]	**PF0139**	155,1×66,6×19,5		LG	1KW,1KE	[-]	**PF0141**	116,4×58,5×17,5	OK039
2.0 TDI	09/13→	140	190	LG	Ø Disc 320	[+]	**PF0140**	188,1×72,9×19		LG	1KW,1KE	[-]	**PF0141**	116,4×58,5×17,5	OK039
2.0 TDI	09/13→	140	190	ATE	Ø Disc 314	[+]	**PF0139**	155,1×66,6×19,5		LG	1KW,1KE	[-]	**PF0141**	116,4×58,5×17,5	OK039
2.0 TDI	09/13→	140	190	LG	Ø Disc 320/4x4	[+]	**PF0140**	188,1×72,9×19		LG	1KW,1KE	[-]	**PF0141**	116,4×58,5×17,5	OK039
2.0 TDI	09/13→	140	190	ATE	Ø Disc 314/4x4	[+]	**PF0139**	155,1×66,6×19,5		LG	1KW,1KE	[-]	**PF0141**	116,4×58,5×17,5	OK039
2.7 TDI	06/07→			LG	Ø Disc 320	[+]	**PF0140**	188,1×72,9×19		LG	1KW,1KE	[-]	**PF0141**	116,4×58,5×17,5	OK039
2.7 TDI	09/09→			ATE	Ø Disc 314	[+]	**PF0139**	155,1×66,6×19,5		LG	1KW,1KE	[-]	**PF0141**	116,4×58,5×17,5	OK039
3.0 TDI	06/07→			LG	Ø Disc 320	[+]	**PF0140**	188,1×72,9×19		LG	1KW,1KE	[-]	**PF0141**	116,4×58,5×17,5	OK039
3.0 TDI	09/09→			ATE	Ø Disc 314	[+]	**PF0139**	155,1×66,6×19,5		LG	1KW,1KE	[-]	**PF0141**	116,4×58,5×17,5	OK039
3.2 Fsi	06/07→			LG	Ø Disc 320	[+]	**PF0140**	188,1×72,9×19		LG	1KW,1KE	[-]	**PF0141**	116,4×58,5×17,5	OK039
3.2 Fsi	09/09→			ATE	Ø Disc 314	[+]	**PF0139**	155,1×66,6×19,5		LG	1KW,1KE	[-]	**PF0141**	116,4×58,5×17,5	OK039
A5 Cabriolet (8T_, 8F_)															
2.0 TFSI	09→			LG	Ø Disc 320	[+]	**PF0140**	188,1×72,9×19		LG	1KW,1KE	[-]	**PF0141**	116,4×58,5×17,5	OK039
2.0 TFSI	03/09→			ATE	Ø Disc 314	[+]	**PF0139**	155,1×66,6×19,5		LG	1KW,1KE	[-]	**PF0141**	116,4×58,5×17,5	OK039
2.0 TDI	09→			LG	Ø Disc 320	[+]	**PF0140**	188,1×72,9×19		LG	1KW,1KE	[-]	**PF0141**	116,4×58,5×17,5	OK039
2.0 TDI	03/09→			ATE	Ø Disc 314	[+]	**PF0139**	155,1×66,6×19,5		LG	1KW,1KE	[-]	**PF0141**	116,4×58,5×17,5	OK039
2.0 TDI	10/11→	105	143	LG	Ø Disc 320	[+]	**PF0140**	188,1×72,9×19		LG	1KW,1KE	[-]	**PF0141**	116,4×58,5×17,5	OK039
2.0 TDI	10/11→	105	143	ATE	Ø Disc 314	[+]	**PF0139**	155,1×66,6×19,5		LG	1KW,1KE	[-]	**PF0141**	116,4×58,5×17,5	OK039
2.0 TDI	05/13→	110	150	LG	Ø Disc 320	[+]	**PF0140**	188,1×72,9×19		LG	1KW,1KE	[-]	**PF0141**	116,4×58,5×17,5	OK039
2.0 TDI	05/13→	110	150	ATE	Ø Disc 314	[+]	**PF0139**	155,1×66,6×19,5		LG	1KW,1KE	[-]	**PF0141**	116,4×58,5×17,5	OK039
2.0 TDI	01/12→	130	177	LG	Ø Disc 320	[+]	**PF0140**	188,1×72,9×19		LG	1KW,1KE	[-]	**PF0141**	116,4×58,5×17,5	OK039
2.0 TDI	01/12→	130	177	ATE	Ø Disc 314	[+]	**PF0139**	155,1×66,6×19,5		LG	1KW,1KE	[-]	**PF0141**	116,4×58,5×17,5	OK039
2.0 TDI	09/13→	140	190	LG	Ø Disc 320	[+]	**PF0140**	188,1×72,9×19		LG	1KW,1KE	[-]	**PF0141**	116,4×58,5×17,5	OK039
2.0 TDI	09/13→	140	190	ATE	Ø Disc 314	[+]	**PF0139**	155,1×66,6×19,5		LG	1KW,1KE	[-]	**PF0141**	116,4×58,5×17,5	OK039
2.0 TDI	09/13→	140	190	LG	Ø Disc 320/4x4	[+]	**PF0140**	188,1×72,9×19		LG	1KW,1KE	[-]	**PF0141**	116,4×58,5×17,5	OK039
2.0 TDI	09/13→	140	190	ATE	Ø Disc 314/4x4	[+]	**PF0139**	155,1×66,6×19,5		LG	1KW,1KE	[-]	**PF0141**	116,4×58,5×17,5	OK039
2.0 TFSI	05/13→	165	224	LG	Ø Disc 320	[+]	**PF0140**	188,1×72,9×19		LG	1KW,1KE	[-]	**PF0141**	116,4×58,5×17,5	OK039
2.0 TFSI	05/13→	165	224	ATE	Ø Disc 314	[+]	**PF0139**	155,1×66,6×19,5		LG	1KW,1KE	[-]	**PF0141**	116,4×58,5×17,5	OK039
2.0 TFSI	05/13→	165	224	LG	Ø Disc 320/4x4	[+]	**PF0140**	188,1×72,9×19		LG	1KW,1KE	[-]	**PF0141**	116,4×58,5×17,5	OK039
2.0 TFSI	05/13→	165	224	ATE	Ø Disc 314/4x4	[+]	**PF0139**	155,1×66,6×19,5		LG	1KW,1KE	[-]	**PF0141**	116,4×58,5×17,5	OK039
2.7 TDI	09→			LG	Ø Disc 320	[+]	**PF0140**	188,1×72,9×19		LG	1KW,1KE	[-]	**PF0141**	116,4×58,5×17,5	OK039
2.7 TDI	03/09→			ATE	Ø Disc 314	[+]	**PF0139**	155,1×66,6×19,5		LG	1KW,1KE	[-]	**PF0141**	116,4×58,5×17,5	OK039
3.0 TDI	09→			LG	Ø Disc 320	[+]	**PF0140**	188,1×72,9×19		LG	1KW,1KE	[-]	**PF0141**	116,4×58,5×17,5	OK039
3.0 TDI	03/09→			ATE	Ø Disc 314	[+]	**PF0139**	155,1×66,6×19,5		LG	1KW,1KE	[-]	**PF0141**	116,4×58,5×17,5	OK039
3.0 TFSI	11/11→	200	272	LG	Ø Disc 320	[+]	**PF0140**	188,1×72,9×19		LG	1KW,1KE	[-]	**PF0141**	116,4×58,5×17,5	OK039

		KW	CV													
				SiS	i	W.i.	MAGNETI MARELLI	W×H×Th (mm)	Extra kit [Opt]	SiS	i	W.i.	MAGNETI MARELLI	W×H×Th (mm)	Extra kit [Opt]
AUDI															
A5 Cabriolet (8T_, 8F_)															
3.0 TFSI	11/11 →	200	272	ATE	Ø Disc 314	[+]	**PF0139**	155,1×66,6×19,5		LG	1KW,1KE	[-]	**PF0141**	116,4×58,5×17,5	OK039
3.2 Fsi	09 →			LG	Ø Disc 320	[+]	**PF0140**	188,1×72,9×19		LG	1KW,1KE	[-]	**PF0141**	116,4×58,5×17,5	OK039
3.2 Fsi	03/09 →			ATE	Ø Disc 314	[+]	**PF0139**	155,1×66,6×19,5		LG	1KW,1KE	[-]	**PF0141**	116,4×58,5×17,5	OK039
A6 I (4A-4B)															
1.8i T.	97 →			ATE		[+]	**PF0143**	156,4×74,2×19		LG		[-]	**PF0131**	87×53×17	OK039/ OK041
1.8 20V T.Tiptronic/ Avant	97 → 00			ATE		[+]	**PF0261**	156,4×74,2×19		LG		[-]	**PF0131**	87×53×17	OK039/ OK041
1.8 20V T./ Avant	97 → 00			ATE		[+]	**PF0261**	156,4×74,2×19		LG		[-]	**PF0131**	87×53×17	OK039/ OK041
1.8i 20V T.	00 →			ATE		[+]	**PF0136**	156,4×74,2×19		LG		[-]	**PF0131**	87×53×17	OK039/ OK041
1.9 TDI	97 →			ATE		[+]	**PF0143**	156,4×74,2×19		LG		[-]	**PF0131**	87×53×17	OK039/ OK041
1.9 TDI/Avant	94 → 97	81		ATE		[+]	**PF0130**	156,4×74,2×19		LG		[-]	**PF0116**	87×66,7×16,5	OK032
1.9 TDI/Avant	00 →	81		ATE		[+]	**PF0136**	156,4×74,2×19		LG		[-]	**PF0131**	87×53×17	OK039/ OK041
1.9 TDI/Avant	00 →	81		ATE		[+]	**PF0261**	156,4×74,2×19		LG		[-]	**PF0131**	87×53×17	OK039/ OK041
2.0i	94 → 97			ATE		[+]	**PF0130**	156,4×74,2×19		LG		[-]	**PF0116**	87×66,7×16,5	OK032
2.0i	97 →			ATE		[+]	**PF0143**	156,4×74,2×19		LG		[-]	**PF0131**	87×53×17	OK039/ OK041
2.0i 16V	94 → 97			ATE		[+]	**PF0130**	156,4×74,2×19		LG		[-]	**PF0116**	87×66,7×16,5	OK032
2.0i 16V / Quattro	94 → 97			ATE		[+]	**PF0130**	156,4×74,2×19		LG		[-]	**PF0116**	87×66,7×16,5	OK032
2.3i	94 → 95			ATE		[+]	**PF0130**	156,4×74,2×19		LG		[-]	**PF0116**	87×66,7×16,5	OK032
2.3i Quattro	94 → 95			ATE		[+]	**PF0130**	156,4×74,2×19		LG		[-]	**PF0116**	87×66,7×16,5	OK032
2.4 30V Avant	97 → 00			ATE		[+]	**PF0261**	156,4×74,2×19		LG		[-]	**PF0131**	87×53×17	OK039/ OK041
2.4 30V Avant	00 →			ATE		[+]	**PF0136**	156,4×74,2×19		LG		[-]	**PF0131**	87×53×17	OK039/ OK041
2.4 30V Tiptronic / Avant	97 → 00			ATE		[+]	**PF0261**	156,4×74,2×19		LG		[-]	**PF0131**	87×53×17	OK039/ OK041
2.4 V6 / Quattro	97 →			ATE		[+]	**PF0143**	156,4×74,2×19		LG		[-]	**PF0131**	87×53×17	OK039/ OK041
2.5 TDI	94 → 97	110		ATE		[+]	**PF0130**	156,4×74,2×19		LG		[-]	**PF0131**	87×53×17	OK039/ OK041
2.5 TDI	97 →			ATE		[+]	**PF0143**	156,4×74,2×19		LG		[-]	**PF0131**	87×53×17	OK039/ OK041
2.5 TDI	00 →	110		ATE		[+]	**PF0136**	156,4×74,2×19		LG		[-]	**PF0131**	87×53×17	OK039/ OK041

		KW	CV	SiS	i	W.i.	MAGNETI MARELLI	W×H×Th (mm)	Extra kit [Opt]	SiS	i	W.i.	MAGNETI MARELLI	W×H×Th (mm)	Extra kit [Opt]
AUDI															
A6 I (4A-4B)															
2.5 TDI Quattro	95→			ATE		[+]	**PF0130**	156,4×74,2×19							
2.6 /Avant Quattro	95→			ATE		[+]	**PF0130**	156,4×74,2×19							
2.8 /Avant Quattro	95→			ATE		[+]	**PF0130**	156,4×74,2×19							
2.8i V6	97→			ATE		[+]	**PF0143**	156,4×74,2×19		LG		[-]	**PF0131**	87×53×17	OK039/ OK041
2.8 30V	00→			ATE		[+]	**PF0136**	156,4×74,2×19		LG		[-]	**PF0131**	87×53×17	OK039/ OK041
A6 I Quattro (4A-4B)															
1.8i 20V	95→97			ATE		[+]	**PF0130**	156,4×74,2×19		LG		[-]	**PF0116**	87×66,7×16,5	OK032
1.8 20V T/ Avant	97→00			ATE		[+]	**PF0261**	156,4×74,2×19		LG		[-]	**PF0131**	87×53×17	OK039/ OK041
2.4 30V Avant	97→00			ATE		[+]	**PF0261**	156,4×74,2×19		LG		[-]	**PF0131**	87×53×17	OK039/ OK041
2.4 30V Tiptronic / Avant	97→00			ATE		[+]	**PF0261**	156,4×74,2×19		LG		[-]	**PF0131**	87×53×17	OK039/ OK041
A6 II (4B-4C)															
1.8i T. 20V	01/97→03/04			ATE		[+]	**PF0143**	156,4×74,2×19		LG		[-]	**PF0131**	87×53×17	OK039/ OK041
1.8i T. 20V	01/97→03/04			ATE		[+]	**PF0142**	156,4×74,2×19,5		LG		[-]	**PF0131**	87×53×17	OK039/ OK041
1.8i T. 20V	01/97→03/04			ATE	4B/Ø Disc 321	[+]	**PF0607**	156,5×72,9×20		LG		[-]	**PF0131**	87×53×17	OK039/ OK041
1.9 TDI	03/97→03/04	81		ATE		[+]	**PF0143**	156,4×74,2×19		LG		[-]	**PF0131**	87×53×17	OK039/ OK041
1.9 TDI	03/97→03/04	81		ATE		[+]	**PF0142**	156,4×74,2×19,5		LG		[-]	**PF0131**	87×53×17	OK039/ OK041
1.9 TDI	03/97→03/04	81		ATE	4B/Ø Disc 321	[+]	**PF0607**	156,5×72,9×20		LG		[-]	**PF0131**	87×53×17	OK039/ OK041
2.0i	08/01→03/04	96		ATE		[+]	**PF0143**	156,4×74,2×19		LG		[-]	**PF0131**	87×53×17	OK039/ OK041
2.0i	08/01→03/04	96		ATE		[+]	**PF0142**	156,4×74,2×19,5		LG		[-]	**PF0131**	87×53×17	OK039/ OK041
2.0i	08/01→03/04	96		ATE	4B/Ø Disc 321	[+]	**PF0607**	156,5×72,9×20		LG		[-]	**PF0131**	87×53×17	OK039/ OK041
2.4i 30V	05/97→03/04			ATE		[+]	**PF0143**	156,4×74,2×19		LG		[-]	**PF0131**	87×53×17	OK039/ OK041
2.4i 30V	05/97→03/04			ATE		[+]	**PF0142**	156,4×74,2×19,5		LG		[-]	**PF0131**	87×53×17	OK039/ OK041
2.4i 30V	05/97→03/04			ATE	4B/Ø Disc 321	[+]	**PF0607**	156,5×72,9×20		LG		[-]	**PF0131**	87×53×17	OK039/ OK041

		KW	CV	SiS	i	W.i.	MAGNETI MARELLI	W×H×Th (mm)	Extra kit [Opt]	SiS	i	W.i.	MAGNETI MARELLI	W×H×Th (mm)	Extra kit [Opt]
AUDI															
A6 II (4B-4C)															
2.5 TDI	04/97 → 03/04			ATE		[+]	**PF0143**	156,4×74,2×19		LG		[-]	**PF0131**	87×53×17	OK039/ OK041
2.5 TDI	04/97 → 03/04			ATE		[+]	**PF0142**	156,4×74,2×19,5		LG		[-]	**PF0131**	87×53×17	OK039/ OK041
2.5 TDI	04/97 → 03/04			ATE	4B/Ø Disc 321	[+]	**PF0607**	156,5×72,9×20		LG		[-]	**PF0131**	87×53×17	OK039/ OK041
2.7i T.	08/01 → 03/04			ATE		[+]	**PF0605**	156,5×72,9×20		LG		[-]	**PF0131**	87×53×17	OK039/ OK041
2.7i T.	08/01 → 03/04			ATE	4B/Ø Disc 321	[+]	**PF0607**	156,5×72,9×20		LG		[-]	**PF0131**	87×53×17	OK039/ OK041
2.8i	03/97 → 03/04			ATE		[+]	**PF0143**	156,4×74,2×19		LG		[-]	**PF0131**	87×53×17	OK039/ OK041
2.8i	03/97 → 03/04			ATE		[+]	**PF0142**	156,4×74,2×19,5		LG		[-]	**PF0131**	87×53×17	OK039/ OK041
2.8i	03/97 → 03/04			ATE	4B/Ø Disc 321	[+]	**PF0607**	156,5×72,9×20		LG		[-]	**PF0131**	87×53×17	OK039/ OK041
3.0i	08/01 → 03/04	162		ATE		[+]	**PF0605**	156,5×72,9×20		LG		[-]	**PF0131**	87×53×17	OK039/ OK041
3.0i	08/01 → 03/04	162		ATE	4B/Ø Disc 321	[+]	**PF0607**	156,5×72,9×20		LG		[-]	**PF0131**	87×53×17	OK039/ OK041
RS6	07/02 →									LG		[+]	**PF0603**	116,2×59×17,5	OK039/ OK091
A6 II Avant (4B-4C)															
1.8i T. 20V / Quattro	01/97 → 03/04			ATE		[+]	**PF0143**	156,4×74,2×19		LG		[-]	**PF0131**	87×53×17	OK039/ OK041
1.8i T. 20V / Quattro	01/97 → 03/04			ATE		[+]	**PF0142**	156,4×74,2×19,5		LG		[-]	**PF0131**	87×53×17	OK039/ OK041
1.8i T. 20V / Quattro	01/97 → 03/04			ATE	4B/Ø Disc 321	[+]	**PF0607**	156,5×72,9×20		LG		[-]	**PF0131**	87×53×17	OK039/ OK041
1.9 TDI / Quattro	12/97 → 03/04	81		ATE		[+]	**PF0143**	156,4×74,2×19		LG		[-]	**PF0131**	87×53×17	OK039/ OK041
1.9 TDI / Quattro	12/97 → 03/04	81		ATE		[+]	**PF0142**	156,4×74,2×19,5		LG		[-]	**PF0131**	87×53×17	OK039/ OK041
1.9 TDI / Quattro	12/97 → 03/04	81		ATE	4B/Ø Disc 321	[+]	**PF0607**	156,5×72,9×20		LG		[-]	**PF0131**	87×53×17	OK039/ OK041
2.0i /Quattro	08/01 → 03/04	96		ATE		[+]	**PF0143**	156,4×74,2×19		LG		[-]	**PF0131**	87×53×17	OK039/ OK041
2.0i /Quattro	12/97 → 03/04	96		ATE		[+]	**PF0142**	156,4×74,2×19,5		LG		[-]	**PF0131**	87×53×17	OK039/ OK041
2.0i /Quattro	12/97 → 03/04	96		ATE	4B/Ø Disc 321	[+]	**PF0607**	156,5×72,9×20		LG		[-]	**PF0131**	87×53×17	OK039/ OK041
2.4i 30V / Quattro	12/97 → 03/04			ATE		[+]	**PF0143**	156,4×74,2×19		LG		[-]	**PF0131**	87×53×17	OK039/ OK041

		KW	CV	SiS	i	W.i.	MAGNETI MARELLI	W×H×Th (mm)	Extra kit [Opt]	SiS	i	W.i.	MAGNETI MARELLI	W×H×Th (mm)	Extra kit [Opt]
AUDI															
A6 II Avant (4B-4C)															
2.4i 30V / Quattro	12/97 → 03/04			ATE		[+]	**PF0142**	156,4×74,2×19,5		LG		[-]	**PF0131**	87×53×17	OK039/ OK041
2.4i 30V / Quattro	12/97 → 03/04			ATE	4B/Ø Disc 321	[+]	**PF0607**	156,5×72,9×20		LG		[-]	**PF0131**	87×53×17	OK039/ OK041
2.5 TDI / Quattro	12/97 → 03/04			ATE		[+]	**PF0143**	156,4×74,2×19		LG		[-]	**PF0131**	87×53×17	OK039/ OK041
2.5 TDI / Quattro	12/97 → 03/04			ATE		[+]	**PF0142**	156,4×74,2×19,5		LG		[-]	**PF0131**	87×53×17	OK039/ OK041
2.5 TDI / Quattro	12/97 → 03/04			ATE	4B/Ø Disc 321	[+]	**PF0607**	156,5×72,9×20		LG		[-]	**PF0131**	87×53×17	OK039/ OK041
2.7i T. /Quattro	08/01 → 03/04			ATE		[+]	**PF0605**	156,5×72,9×20		LG		[-]	**PF0131**	87×53×17	OK039/ OK041
2.7i T. /Quattro	08/01 → 03/04			ATE	4B/Ø Disc 321	[+]	**PF0607**	156,5×72,9×20		LG		[-]	**PF0131**	87×53×17	OK039/ OK041
2.8i /Quattro	12/97 → 03/04			ATE		[+]	**PF0143**	156,4×74,2×19		LG		[-]	**PF0131**	87×53×17	OK039/ OK041
2.8i /Quattro	12/97 → 03/04			ATE		[+]	**PF0142**	156,4×74,2×19,5		LG		[-]	**PF0131**	87×53×17	OK039/ OK041
2.8i /Quattro	12/97 → 03/04			ATE	4B/Ø Disc 321	[+]	**PF0607**	156,5×72,9×20		LG		[-]	**PF0131**	87×53×17	OK039/ OK041
3.0i /Quattro	08/01 → 03/04	162		ATE		[+]	**PF0605**	156,5×72,9×20		LG		[-]	**PF0131**	87×53×17	OK039/ OK041
3.0i /Quattro	08/01 → 03/04	162		ATE	4B/Ø Disc 321	[+]	**PF0607**	156,5×72,9×20		LG		[-]	**PF0131**	87×53×17	OK039/ OK041
A6 III (4F-8F)															
1.8 T.	04/04 →			ATE	8F	[+]	**PF0142**	156,4×74,2×19,5		LG		[-]	**PF0601**	105,5×56×16,7	OK039/ OK085
1.8 T. Quattro	04/04 →			ATE	8F	[+]	**PF0142**	156,4×74,2×19,5		LG		[-]	**PF0601**	105,5×56×16,7	OK039/ OK085
1.8 T. Avant	04/04 →			ATE	8F	[+]	**PF0142**	156,4×74,2×19,5		LG		[-]	**PF0601**	105,5×56×16,7	OK039/ OK085
1.8 T. Quattro Avant	04/04 →			ATE	8F	[+]	**PF0142**	156,4×74,2×19,5		LG		[-]	**PF0601**	105,5×56×16,7	OK039/ OK085
1.8 T.	04/04 →			ATE	4F/Ø Disc 347×30	[+]	**PF0605**	156,5×72,9×20		LG		[-]	**PF0601**	105,5×56×16,7	OK039/ OK085
1.8	04/04 →			ATE	4F	[+]	**PF0605**	156,5×72,9×20		LG	Vented Disc	[-]	**PF0602**	116,2×59×17,5	OK039/ OK091
1.9 TDI	04/04 →			ATE	8F	[+]	**PF0142**	156,4×74,2×19,5		LG		[-]	**PF0601**	105,5×56×16,7	OK039/ OK085
1.9 TDI Quattro	04/04 →			ATE	8F	[+]	**PF0142**	156,4×74,2×19,5		LG		[-]	**PF0601**	105,5×56×16,7	OK039/ OK085
1.9 TDI Avant	04/04 →			ATE	8F	[+]	**PF0142**	156,4×74,2×19,5		LG		[-]	**PF0601**	105,5×56×16,7	OK039/ OK085

		KW	CV	SiS	i	W.i.	MAGNETI MARELLI	W×H×Th (mm)	Extra kit [Opt]	SiS	i	W.i.	MAGNETI MARELLI	W×H×Th (mm)	Extra kit [Opt]
AUDI															
A6 III (4F-8F)															
1.9 TDI Quattro Avant	04/04 →			ATE	8F	[+]	**PF0142**	156,4×74,2×19,5		LG		[-]	**PF0601**	105,5×56×16,7	OK039/ OK085
1.9 TDI.	04/04 →			ATE	4F/Ø Disc 347×30	[+]	**PF0605**	156,5×72,9×20		LG		[-]	**PF0601**	105,5×56×16,7	OK039/ OK085
1.9 TDI	04/04 →			ATE	4F	[+]	**PF0605**	156,5×72,9×20		LG	Vented Disc	[-]	**PF0602**	116,2×59×17,5	OK039/ OK091
2.4	04/04 →			ATE	8F	[+]	**PF0142**	156,4×74,2×19,5		LG		[-]	**PF0601**	105,5×56×16,7	OK039/ OK085
2.4 Quattro	04/04 →			ATE	8F	[+]	**PF0142**	156,4×74,2×19,5		LG		[-]	**PF0601**	105,5×56×16,7	OK039/ OK085
2.4 Avant	04/04 →			ATE	8F	[+]	**PF0142**	156,4×74,2×19,5		LG		[-]	**PF0601**	105,5×56×16,7	OK039/ OK085
2.4 Quattro	04/04 →			ATE	8F	[+]	**PF0142**	156,4×74,2×19,5		LG		[-]	**PF0601**	105,5×56×16,7	OK039/ OK085
2.4	04/04 →			ATE	4F/Ø Disc 347×30	[+]	**PF0605**	156,5×72,9×20		LG		[-]	**PF0601**	105,5×56×16,7	OK039/ OK085
2.4	04/04 →			ATE	4F	[+]	**PF0605**	156,5×72,9×20		LG	Vented Disc	[-]	**PF0602**	116,2×59×17,5	OK039/ OK091
2.5 TDI	04/04 →			ATE	8F	[+]	**PF0142**	156,4×74,2×19,5		LG		[-]	**PF0601**	105,5×56×16,7	OK039/ OK085
2.5 TDI Quattro	04/04 →			ATE	8F	[+]	**PF0142**	156,4×74,2×19,5		LG		[-]	**PF0601**	105,5×56×16,7	OK039/ OK085
2.5 TDI Avant	04/04 →			ATE	8F	[+]	**PF0142**	156,4×74,2×19,5		LG		[-]	**PF0601**	105,5×56×16,7	OK039/ OK085
2.5 TDI Quattro	04/04 →			ATE	8F	[+]	**PF0142**	156,4×74,2×19,5		LG		[-]	**PF0601**	105,5×56×16,7	OK039/ OK085
2.5 TDI	04/04 →			ATE	4F/Ø Disc 347×30	[+]	**PF0605**	156,5×72,9×20		LG		[-]	**PF0601**	105,5×56×16,7	OK039/ OK085
2.5 TDI All Types	04/04 →			ATE	4F	[+]	**PF0605**	156,5×72,9×20		LG	Vented Disc	[-]	**PF0602**	116,2×59×17,5	OK039/ OK091
2.7 Quattro	04/04 →			ATE	8F	[+]	**PF0142**	156,4×74,2×19,5		LG		[-]	**PF0601**	105,5×56×16,7	OK039/ OK085
2.7 Quattro Avant	04/04 →			ATE	8F	[+]	**PF0142**	156,4×74,2×19,5		LG		[-]	**PF0601**	105,5×56×16,7	OK039/ OK085
2.7	04/04 →			ATE	4F/Ø Disc 347×30	[+]	**PF0605**	156,5×72,9×20		LG		[-]	**PF0601**	105,5×56×16,7	OK039/ OK085
2.7 All Types	04/04 →			ATE	4F	[+]	**PF0605**	156,5×72,9×20		LG	Vented Disc	[-]	**PF0602**	116,2×59×17,5	OK039/ OK091
3.0 Quattro	04/04 →			ATE	4F	[+]	**PF0605**	156,5×72,9×20		LG		[-]	**PF0601**	105,5×56×16,7	OK039/ OK085
3.0 Quattro	04/04 →			ATE	4F	[+]	**PF0605**	156,5×72,9×20		LG	Vented Disc	[-]	**PF0602**	116,2×59×17,5	OK039/ OK091

		KW	CV	SiS	i	W.i.	MAGNETI MARELLI	W×H×Th (mm)	Extra kit [Opt]	SiS	i	W.i.	MAGNETI MARELLI	W×H×Th (mm)	Extra kit [Opt]
AUDI															
A6 IV (4G_)															
2.0 TDI	03/11→	130	177	LG		[+]	**PF0140**	188,1×72,9×19		LG		[-]	**PF0141**	116,4×58,5×17,5	OK039
2.0 TDI	03/11→	130	177	LG		[+]	**PF0140**	188,1×72,9×19		LG	4G0/Ø Disc 330	[+]	**PF0676**	116,4×58,5×17,5	OK030
2.0 TDI	03/11→	130	177	LG		[+]	**PF0140**	188,1×72,9×19		LG		[-]	**PF0673**	116,4×58,5×17,5	OK030
2.0 TDI	03/11→	120	163	LG		[+]	**PF0140**	188,1×72,9×19		LG		[-]	**PF0141**	116,4×58,5×17,5	OK039
2.0 TDI	03/11→	120	163	LG		[+]	**PF0140**	188,1×72,9×19		LG	4G0/Ø Disc 330	[+]	**PF0676**	116,4×58,5×17,5	OK030
2.0 TDI	03/11→	120	163	LG		[+]	**PF0140**	188,1×72,9×19		LG		[-]	**PF0673**	116,4×58,5×17,5	OK030
2.0 TDI	11/13→	140	190	LG		[+]	**PF0140**	188,1×72,9×19		LG	4G0/Ø Disc 330	[+]	**PF0676**	116,4×58,5×17,5	OK030
2.0 TDI	11/13→	140	190	LG		[+]	**PF0140**	188,1×72,9×19		LG		[-]	**PF0673**	116,4×58,5×17,5	OK030
2.0 TFSI	05/11→	132	180	LG		[+]	**PF0140**	188,1×72,9×19		LG		[-]	**PF0141**	116,4×58,5×17,5	OK039
2.0 TFSI	05/11→	132	180	LG		[+]	**PF0140**	188,1×72,9×19		LG	4G0/Ø Disc 330	[+]	**PF0676**	116,4×58,5×17,5	OK030
2.0 TFSI	05/11→	132	180	LG		[+]	**PF0140**	188,1×72,9×19		LG		[-]	**PF0673**	116,4×58,5×17,5	OK030
2.8 FSI	03/11→	150	204	LG		[+]	**PF0140**	188,1×72,9×19		LG		[-]	**PF0141**	116,4×58,5×17,5	OK039
2.8 FSI	03/11→	150	204	LG		[+]	**PF0140**	188,1×72,9×19		LG	4G0/Ø Disc 330	[+]	**PF0676**	116,4×58,5×17,5	OK030
2.8 FSI	03/11→	150	204	LG		[+]	**PF0140**	188,1×72,9×19		LG		[-]	**PF0673**	116,4×58,5×17,5	OK030
2.8 FSI /Quattro	03/11→	150	204	LG		[+]	**PF0140**	188,1×72,9×19		LG		[-]	**PF0141**	116,4×58,5×17,5	OK039
2.8 FSI /Quattro	03/11→	150	204	LG		[+]	**PF0140**	188,1×72,9×19		LG	4G0/Ø Disc 330	[+]	**PF0676**	116,4×58,5×17,5	OK030
2.8 FSI /Quattro	03/11→	150	204	LG		[+]	**PF0140**	188,1×72,9×19		LG		[-]	**PF0673**	116,4×58,5×17,5	OK030
3.0 TDI	03/11→	150	204	LG		[+]	**PF0140**	188,1×72,9×19		LG		[-]	**PF0141**	116,4×58,5×17,5	OK039
3.0 TDI	03/11→	150	204	LG		[+]	**PF0140**	188,1×72,9×19		LG	4G0/Ø Disc 330	[+]	**PF0676**	116,4×58,5×17,5	OK030
3.0 TDI	03/11→	150	204	LG		[+]	**PF0140**	188,1×72,9×19		LG		[-]	**PF0673**	116,4×58,5×17,5	OK030
3.0 TDI /Quattro	03/11→	150	204	LG		[+]	**PF0140**	188,1×72,9×19		LG		[-]	**PF0141**	116,4×58,5×17,5	OK039
3.0 TDI /Quattro	03/11→	150	204	LG		[+]	**PF0140**	188,1×72,9×19		LG	4G0/Ø Disc 330	[+]	**PF0676**	116,4×58,5×17,5	OK030
3.0 TDI /Quattro	03/11→	150	204	LG		[+]	**PF0140**	188,1×72,9×19		LG		[-]	**PF0673**	116,4×58,5×17,5	OK030
3.0 TDI /Quattro	03/11→	180	245	LG		[+]	**PF0140**	188,1×72,9×19		LG		[-]	**PF0141**	116,4×58,5×17,5	OK039
3.0 TDI /Quattro	03/11→	180	245	LG		[+]	**PF0140**	188,1×72,9×19		LG	4G0/Ø Disc 330	[+]	**PF0676**	116,4×58,5×17,5	OK030
3.0 TDI /Quattro	03/11→	180	245	LG		[+]	**PF0140**	188,1×72,9×19		LG		[-]	**PF0673**	116,4×58,5×17,5	OK030
3.0 TFSI / Quattro	03/11→	220	300	LG		[+]	**PF0140**	188,1×72,9×19		LG		[-]	**PF0141**	116,4×58,5×17,5	OK039
3.0 TFSI / Quattro	03/11→	220	300	LG		[+]	**PF0140**	188,1×72,9×19		LG	4G0/Ø Disc 330	[+]	**PF0676**	116,4×58,5×17,5	OK030
3.0 TFSI / Quattro	03/11→	220	300	LG		[+]	**PF0140**	188,1×72,9×19		LG		[-]	**PF0673**	116,4×58,5×17,5	OK030
3.0 TFSI / Quattro	08/11→	230	313	LG		[+]	**PF0140**	188,1×72,9×19		LG		[-]	**PF0141**	116,4×58,5×17,5	OK039

		KW	CV	SiS	i	W.i.	MAGNETI MARELLI	W×H×Th (mm)	Extra kit [Opt]	SiS	i	W.i.	MAGNETI MARELLI	W×H×Th (mm)	Extra kit [Opt]
AUDI															
A6 IV (4G_)															
3.0 TFSI / Quattro	08/11→	230	313	LG		[+]	**PF0140**	188,1×72,9×19		LG	4G0/Ø Disc 330	[+]	**PF0676**	116,4×58,5×17,5	OK030
3.0 TFSI / Quattro	08/11→	230	313	LG		[+]	**PF0140**	188,1×72,9×19		LG		[-]	**PF0673**	116,4×58,5×17,5	OK030
A6 Allroad (4FH)															
2.7 TDI	05/06→	132	180	ATE	4x4	[+]	**PF0609**	156,5×72,9×20		LG		[-]	**PF0133**	105,5×56×17	OK039/ OK085
2.7 TDI	05/06→	132	180	ATE	4x4	[+]	**PF0609**	156,5×72,9×20		LG		[-]	**PF0601**	105,5×56×16,7	OK039/ OK085
2.7 TDI	05/06→	120	163	ATE	4x4	[+]	**PF0609**	156,5×72,9×20		LG		[-]	**PF0133**	105,5×56×17	OK039/ OK085
2.7 TDI	05/06→	120	163	ATE	4x4	[+]	**PF0609**	156,5×72,9×20		LG		[-]	**PF0601**	105,5×56×16,7	OK039/ OK085
2.7 TDI	10/08→	140	190	ATE	4x4	[+]	**PF0609**	156,5×72,9×20		LG		[-]	**PF0133**	105,5×56×17	OK039/ OK085
2.7 TDI	10/08→	140	190	ATE	4x4	[+]	**PF0609**	156,5×72,9×20		LG		[-]	**PF0601**	105,5×56×16,7	OK039/ OK085
3.0 TDI	05/06→	171	233	ATE	4x4	[+]	**PF0609**	156,5×72,9×20		LG		[-]	**PF0133**	105,5×56×17	OK039/ OK085
3.0 TDI	05/06→	171	233	ATE	4x4	[+]	**PF0609**	156,5×72,9×20		LG		[-]	**PF0601**	105,5×56×16,7	OK039/ OK085
3.0 TDI	05/06→	155	211	ATE	4x4	[+]	**PF0609**	156,5×72,9×20		LG		[-]	**PF0133**	105,5×56×17	OK039/ OK085
3.0 TDI	05/06→	155	211	ATE	4x4	[+]	**PF0609**	156,5×72,9×20		LG		[-]	**PF0601**	105,5×56×16,7	OK039/ OK085
3.0 TDI	10/08→	176	240	ATE	4x4	[+]	**PF0609**	156,5×72,9×20		LG		[-]	**PF0133**	105,5×56×17	OK039/ OK085
3.0 TDI	10/08→	176	240	ATE	4x4	[+]	**PF0609**	156,5×72,9×20		LG		[-]	**PF0601**	105,5×56×16,7	OK039/ OK085
3.0 TFSI	10/08→	213	290	ATE	4x4	[+]	**PF0609**	156,5×72,9×20		LG		[-]	**PF0133**	105,5×56×17	OK039/ OK085
3.0 TFSI	10/08→	213	290	ATE	4x4	[+]	**PF0609**	156,5×72,9×20		LG		[-]	**PF0601**	105,5×56×16,7	OK039/ OK085
3.2 FSI	05/06→	188	255	ATE	4x4	[+]	**PF0609**	156,5×72,9×20		LG		[-]	**PF0133**	105,5×56×17	OK039/ OK085
3.2 FSI	05/06→	188	255	ATE	4x4	[+]	**PF0609**	156,5×72,9×20		LG		[-]	**PF0601**	105,5×56×16,7	OK039/ OK085
4.2 FSI	05/06→	257	350	ATE	4x4	[+]	**PF0609**	156,5×72,9×20		LG		[-]	**PF0133**	105,5×56×17	OK039/ OK085
4.2 FSI	05/06→	257	350	ATE	4x4	[+]	**PF0609**	156,5×72,9×20		LG		[-]	**PF0601**	105,5×56×16,7	OK039/ OK085

		KW	CV													
				SiS	i	W.i.	MAGNETI MARELLI	W×H×Th (mm)	Extra kit [Opt]	SiS	i	W.i.	MAGNETI MARELLI	W×H×Th (mm)	Extra kit [Opt]
AUDI															
A6 Allroad (4GH)															
3.0 TFSI	03/12→	228	310	LG	Ø Disc 345/1LJ	[+]	**PF0140**	188,1×72,9×19		LG	2EA/Ø Disc 330	[+]	**PF0676**	116,4×58,5×17,5	OK030
3.0 TFSI	03/12→	228	310							LG		[-]	**PF0673**	116,4×58,5×17,5	OK030
3.0 TDI	03/12→	150	204	LG	Ø Disc 345/1LJ	[+]	**PF0140**	188,1×72,9×19		LG	2EA/Ø Disc 330	[+]	**PF0676**	116,4×58,5×17,5	OK030
3.0 TDI	03/12→	150	204							LG		[-]	**PF0673**	116,4×58,5×17,5	OK030
3.0 TDI	03/12→	180	245	LG	Ø Disc 345/1LJ	[+]	**PF0140**	188,1×72,9×19		LG	2EA/Ø Disc 330	[+]	**PF0676**	116,4×58,5×17,5	OK030
3.0 TDI	03/12→	180	245							LG		[-]	**PF0673**	116,4×58,5×17,5	OK030
3.0 TDI	03/12→	230	313	LG	Ø Disc 345/1LJ	[+]	**PF0140**	188,1×72,9×19		LG	2EA/Ø Disc 330	[+]	**PF0676**	116,4×58,5×17,5	OK030
3.0 TDI	03/12→	230	313							LG		[-]	**PF0673**	116,4×58,5×17,5	OK030
A7 Sportback (4G_)															
2.5 FSI	02/14→	150	204	LG		[+]	**PF0140**	188,1×72,9×19		LG		[-]	**PF0141**	116,4×58,5×17,5	OK039
2.5 FSI	02/14→	150	204	LG		[+]	**PF0140**	188,1×72,9×19		LG	4G0/Ø Disc 330	[+]	**PF0676**	116,4×58,5×17,5	OK030
2.8 FSI	02/11→	150	204	LG		[+]	**PF0140**	188,1×72,9×19		LG		[-]	**PF0141**	116,4×58,5×17,5	OK039
2.8 FSI	02/11→	150	204	LG		[+]	**PF0140**	188,1×72,9×19		LG	4G0/Ø Disc 330	[+]	**PF0676**	116,4×58,5×17,5	OK030
2.8 FSI	02/11→	150	204	LG		[+]	**PF0140**	188,1×72,9×19		LG		[-]	**PF0673**	116,4×58,5×17,5	OK030
2.8 FSI Quattro	10/10→	150	204	LG		[+]	**PF0140**	188,1×72,9×19		LG		[-]	**PF0141**	116,4×58,5×17,5	OK039
2.8 FSI Quattro	10/10→	150	204	LG		[+]	**PF0140**	188,1×72,9×19		LG	4G0/Ø Disc 330	[+]	**PF0676**	116,4×58,5×17,5	OK030
2.8 FSI Quattro	10/10→	150	204	LG		[+]	**PF0140**	188,1×72,9×19		LG		[-]	**PF0673**	116,4×58,5×17,5	OK030
3.0 TDI	11/10→	150	204	LG		[+]	**PF0140**	188,1×72,9×19		LG		[-]	**PF0141**	116,4×58,5×17,5	OK039
3.0 TDI	11/10→	150	204	LG		[+]	**PF0140**	188,1×72,9×19		LG	4G0/Ø Disc 330	[+]	**PF0676**	116,4×58,5×17,5	OK030
3.0 TDI	11/10→	150	204	LG		[+]	**PF0140**	188,1×72,9×19		LG		[-]	**PF0673**	116,4×58,5×17,5	OK030
3.0 TDI Quattro	12/10→	150	204	LG		[+]	**PF0140**	188,1×72,9×19		LG		[-]	**PF0141**	116,4×58,5×17,5	OK039
3.0 TDI Quattro	12/10→	150	204	LG		[+]	**PF0140**	188,1×72,9×19		LG	4G0/Ø Disc 330	[+]	**PF0676**	116,4×58,5×17,5	OK030
3.0 TDI Quattro	12/10→	150	204	LG		[+]	**PF0140**	188,1×72,9×19		LG		[-]	**PF0673**	116,4×58,5×17,5	OK030
3.0 TDI Quattro	10/10→	180	245	LG		[+]	**PF0140**	188,1×72,9×19		LG		[-]	**PF0141**	116,4×58,5×17,5	OK039
3.0 TDI Quattro	10/10→	180	245	LG		[+]	**PF0140**	188,1×72,9×19		LG	4G0/Ø Disc 330	[+]	**PF0676**	116,4×58,5×17,5	OK030
3.0 TDI Quattro	10/10→	180	245	LG		[+]	**PF0140**	188,1×72,9×19		LG		[-]	**PF0673**	116,4×58,5×17,5	OK030
3.0 TFSI Quattro	01/11→	228	310	LG		[+]	**PF0140**	188,1×72,9×19		LG		[-]	**PF0141**	116,4×58,5×17,5	OK039

		KW	CV	SiS	i	W.i.	MAGNETI MARELLI	W×H×Th (mm)	Extra kit [Opt]	SiS	i	W.i.	MAGNETI MARELLI	W×H×Th (mm)	Extra kit [Opt]
AUDI															
A7 Sportback (4G_)															
3.0 TFSI Quattro	01/11 →	228	310	LG		[+]	**PF0140**	188,1×72,9×19		LG	4G0/Ø Disc 330	[+]	**PF0676**	116,4×58,5×17,5	OK030
3.0 TFSI Quattro	01/11 →	228	310	LG		[+]	**PF0140**	188,1×72,9×19		LG		[-]	**PF0673**	116,4×58,5×17,5	OK030
3.0 TFSI Quattro	10/10 →	220	300	LG		[+]	**PF0140**	188,1×72,9×19		LG		[-]	**PF0141**	116,4×58,5×17,5	OK039
3.0 TFSI Quattro	10/10 →	220	300	LG		[+]	**PF0140**	188,1×72,9×19		LG	4G0/Ø Disc 330	[+]	**PF0676**	116,4×58,5×17,5	OK030
3.0 TFSI Quattro	10/10 →	220	300	LG		[+]	**PF0140**	188,1×72,9×19		LG		[-]	**PF0673**	116,4×58,5×17,5	OK030
A8 (4D2, 4D8)															
2.5 TDI	01/97 → 04/00	110	150	ATE		[+]	**PF0130**	156,4×74,2×19		LG		[-]	**PF0116**	87×66,7×16,5	OK032
2.5 TDI	09/00 → 09/02	132	180	ATE		[+]	**PF0130**	156,4×74,2×19		LG		[-]	**PF0116**	87×66,7×16,5	OK032
2.5 TDI Quattro	07/97 → 04/00	110	150	ATE		[+]	**PF0130**	156,4×74,2×19		LG		[-]	**PF0116**	87×66,7×16,5	OK032
2.5 TDI Quattro	09/00 → 09/02	132	180	ATE		[+]	**PF0130**	156,4×74,2×19		LG		[-]	**PF0116**	87×66,7×16,5	OK032
2.8	03/94 → 03/96	128	174	ATE		[+]	**PF0130**	156,4×74,2×19		LG		[-]	**PF0116**	87×66,7×16,5	OK032
2.8	04/96 → 09/02	142	193	ATE		[+]	**PF0130**	156,4×74,2×19		LG		[-]	**PF0116**	87×66,7×16,5	OK032
2.8	07/95 → 03/96	120	163	ATE		[+]	**PF0130**	156,4×74,2×19		LG		[-]	**PF0116**	87×66,7×16,5	OK032
2.8 Quattro	03/94 → 03/96	128	174	ATE		[+]	**PF0130**	156,4×74,2×19		LG		[-]	**PF0116**	87×66,7×16,5	OK032
2.8 Quattro	04/96 → 09/02	142	193	ATE		[+]	**PF0130**	156,4×74,2×19		LG		[-]	**PF0116**	87×66,7×16,5	OK032
2.8 Quattro	07/95 → 03/96	120	163	ATE		[+]	**PF0130**	156,4×74,2×19		LG		[-]	**PF0116**	87×66,7×16,5	OK032
3.3 TDI Quattro	06/00 → 09/02	165	224	ATE		[+]	**PF0130**	156,4×74,2×19		LG		[-]	**PF0116**	87×66,7×16,5	OK032
3.7	07/95 → 12/98	169	230	ATE		[+]	**PF0130**	156,4×74,2×19		LG		[-]	**PF0116**	87×66,7×16,5	OK032
3.7	11/98 → 09/02	191	260	ATE		[+]	**PF0130**	156,4×74,2×19		LG		[-]	**PF0116**	87×66,7×16,5	OK032
3.7 Quattro	07/95 → 11/98	169	230	ATE		[+]	**PF0130**	156,4×74,2×19		LG		[-]	**PF0116**	87×66,7×16,5	OK032
3.7 Quattro	11/98 → 09/02	191	260	ATE		[+]	**PF0130**	156,4×74,2×19		LG		[-]	**PF0116**	87×66,7×16,5	OK032
4.2 Quattro	03/94 → 11/98	220	299	ATE		[+]	**PF0130**	156,4×74,2×19		LG		[-]	**PF0116**	87×66,7×16,5	OK032
4.2 Quattro	03/94 → 07/96	180	245	ATE		[+]	**PF0130**	156,4×74,2×19		LG		[-]	**PF0116**	87×66,7×16,5	OK032
4.2 Quattro	11/98 → 09/02	228	310	ATE		[+]	**PF0130**	156,4×74,2×19		LG		[-]	**PF0116**	87×66,7×16,5	OK032
4.2 Quattro	02/99 → 04/00	175	238	ATE		[+]	**PF0130**	156,4×74,2×19		LG		[-]	**PF0116**	87×66,7×16,5	OK032
4.2 Quattro	07/95 → 09/98	210	286	ATE		[+]	**PF0130**	156,4×74,2×19		LG		[-]	**PF0116**	87×66,7×16,5	OK032
6.0 W12 Quattro	01/01 → 09/02	309	420	ATE		[+]	**PF0130**	156,4×74,2×19		LG		[-]	**PF0116**	87×66,7×16,5	OK032
S 8 Quattro	07/96 → 06/99	250	340	ATE		[+]	**PF0130**	156,4×74,2×19							
S 8 Quattro	06/99 → 09/02	265	360	ATE		[+]	**PF0130**	156,4×74,2×19							
A8 (4E)															
2.8 FSI	08/07 → 07/10	154	210							LG		[+]	**PF0603**	116,2×59×17,5	OK039/ OK091
3.0	08/03 → 07/10	162	220							LG		[+]	**PF0603**	116,2×59×17,5	OK039/ OK091

		KW	CV													
				SiS	i	W.i.	MAGNETI MARELLI	W×H×Th (mm)	Extra kit [Opt]	SiS	i	W.i.	MAGNETI MARELLI	W×H×Th (mm)	Extra kit [Opt]
AUDI															
A8 (4E)															
3.0	07/03 → 07/10	160	218							LG		[+]	**PF0603**	116,2×59×17,5	OK039/ OK091
3.0 Long Quattro	11/03 → 05/06	160	218							LG		[+]	**PF0603**	116,2×59×17,5	OK039/ OK091
3.0 Long Quattro	08/03 → 05/05	162	220							LG		[+]	**PF0603**	116,2×59×17,5	OK039/ OK091
3.0 TDI Quattro	08/03 → 07/10	171	233							LG		[+]	**PF0603**	116,2×59×17,5	OK039/ OK091
3.0 TDI Quattro	11/03 → 07/10	155	211							LG		[+]	**PF0603**	116,2×59×17,5	OK039/ OK091
3.2 FSI	06/05 → 07/10	191	260							LG		[+]	**PF0603**	116,2×59×17,5	OK039/ OK091
3.2 FSI Quattro	06/05 → 07/10	191	260							LG		[+]	**PF0603**	116,2×59×17,5	OK039/ OK091
3.7 Quattro	10/02 → 07/10	206	280							LG		[+]	**PF0603**	116,2×59×17,5	OK039/ OK091
4.0 TDI Quattro	03/03 → 07/10	202	275							LG		[+]	**PF0603**	116,2×59×17,5	OK039/ OK091
4.2 Quattro	10/02 → 07/10	246	335							LG		[+]	**PF0603**	116,2×59×17,5	OK039/ OK091
4.2 FSI Quattro	06/06 → 07/10	257	350							LG		[+]	**PF0603**	116,2×59×17,5	OK039/ OK091
4.2 TDI Quattro	07/05 → 07/10	235	320							LG		[+]	**PF0603**	116,2×59×17,5	OK039/ OK091
4.2 TDI Quattro	07/05 → 07/10	240	326							LG		[+]	**PF0603**	116,2×59×17,5	OK039/ OK091
4.2 TDI Quattro	08/07 →	254	345							LG		[+]	**PF0603**	116,2×59×17,5	OK039/ OK091
6.0 W12 Quattro	12/03 → 07/10	331	450							LG		[+]	**PF0603**	116,2×59×17,5	OK039/ OK091
S8 Quattro	06/06 → 07/10	331	450							LG		[+]	**PF0603**	116,2×59×17,5	OK039/ OK091
A8 (4H)															
3.0 TDI	09/11 →	150	204							LG	+2 w.i./1KY-1KZ/Ø356	[+]	**PF0675**	116,4×58,5×17,5	OK030
3.0 TDI	09/11 →	150	204							LG	+2 w.i./ 1KW/Ø330	[+]	**PF0674**	116,4×58,5×17,5	OK030
3.0 TDI Quattro	08/10 →	155	211							LG	+2 w.i./1KY-1KZ/Ø356	[+]	**PF0675**	116,4×58,5×17,5	OK030
3.0 TDI Quattro	08/10 →	155	211							LG	+2 w.i./ 1KW/Ø330	[+]	**PF0674**	116,4×58,5×17,5	OK030
3.0 TDI Quattro	07/10 →	184	250							LG	+2 w.i./1KY-1KZ/Ø356	[+]	**PF0675**	116,4×58,5×17,5	OK030

		KW	CV														
				SiS	i	W.i.	MAGNETI MARELLI	W×H×Th (mm)	Extra kit [Opt]	SiS	i	W.i.	MAGNETI MARELLI	W×H×Th (mm)	Extra kit [Opt]
AUDI															
A8 (4H)															
3.0 TDI Quattro	07/10 →	184	250							LG	+2 w.i./ 1KW/Ø330	[+]	**PF0674**	116,4×58,5×17,5	OK030
3.0 TFSI Quattro	06/10 →	245	333							LG	+2 w.i./1KY-1KZ/Ø356	[+]	**PF0675**	116,4×58,5×17,5	OK030
3.0 TFSI Quattro	06/10 →	245	333							LG	+2 w.i./ 1KW/Ø330	[+]	**PF0674**	116,4×58,5×17,5	OK030
3.0 TFSI Quattro	07/10 →	213	290							LG	+2 w.i./1KY-1KZ/Ø356	[+]	**PF0675**	116,4×58,5×17,5	OK030
3.0 TFSI Quattro	07/10 →	213	290							LG	+2 w.i./ 1KW/Ø330	[+]	**PF0674**	116,4×58,5×17,5	OK030
4.2 FSI Quattro	11/09 →	273	371							LG	+2 w.i./1KY-1KZ/Ø356	[+]	**PF0675**	116,4×58,5×17,5	OK030
4.2 FSI Quattro	11/09 →	273	371							LG	+2 w.i./ 1KW/Ø330	[+]	**PF0674**	116,4×58,5×17,5	OK030
4.2 TDI Quattro	11/09 →	258	351							LG	+2 w.i./1KY-1KZ/Ø356	[+]	**PF0675**	116,4×58,5×17,5	OK030
4.2 TDI Quattro	11/09 →	258	351							LG	+2 w.i./ 1KW/Ø330	[+]	**PF0674**	116,4×58,5×17,5	OK030
6.3 W12 Quattro	01/11 →	368	500							LG	+2 w.i./1KY-1KZ/Ø356	[+]	**PF0675**	116,4×58,5×17,5	OK030
6.3 W12 Quattro	01/11 →	368	500							LG	+2 w.i./ 1KW/Ø330	[+]	**PF0674**	116,4×58,5×17,5	OK030
Allroad (4BH)															
2.5 TDI Quattro	05/00 → 08/05	132	180	ATE		[+]	**PF0605**	156,5×72,9×20		LG		[-]	**PF0131**	87×53×17	OK039/ OK041
2.5 TDI Quattro	05/00 → 08/05	132	180	ATE		[+]	**PF0607**	156,5×72,9×20		LG		[-]	**PF0131**	87×53×17	OK039/ OK041
2.5 TDI Quattro	05/03 → 08/05	120	163	ATE		[+]	**PF0605**	156,5×72,9×20		LG		[-]	**PF0131**	87×53×17	OK039/ OK041
2.5 TDI Quattro	05/03 → 08/05	120	163	ATE		[+]	**PF0607**	156,5×72,9×20		LG		[-]	**PF0131**	87×53×17	OK039/ OK041
2.7 Quattro	09/00 → 08/05	187	254	ATE		[+]	**PF0605**	156,5×72,9×20		LG		[-]	**PF0131**	87×53×17	OK039/ OK041
2.7 Quattro	09/00 → 08/05	187	254	ATE		[+]	**PF0607**	156,5×72,9×20		LG		[-]	**PF0131**	87×53×17	OK039/ OK041
2.7 T Quattro	05/00 → 08/05	184	250	ATE		[+]	**PF0605**	156,5×72,9×20		LG		[-]	**PF0131**	87×53×17	OK039/ OK041
2.7 T Quattro	05/00 → 08/05	184	250	ATE		[+]	**PF0607**	156,5×72,9×20		LG		[-]	**PF0131**	87×53×17	OK039/ OK041
4.2 V8 Quattro	07/02 → 08/05	220	299	ATE		[+]	**PF0607**	156,5×72,9×20		LG		[-]	**PF0131**	87×53×17	OK039/ OK041

		KW	CV													
				SiS	i	W.i.	MAGNETI MARELLI	W×H×Th (mm)	Extra kit [Opt]	SiS	i	W.i.	MAGNETI MARELLI	W×H×Th (mm)	Extra kit [Opt]
AUDI															
Cabriolet (8G,B4)															
1.9 TDI	92→									LG		[-]	**PF0116**	87×66,7×16,5	OK032
2.0i 16V	92→									LG		[-]	**PF0116**	87×66,7×16,5	OK032
2.3i 20V E	92→									LG		[-]	**PF0116**	87×66,7×16,5	OK032
Coupé (89)															
GT 5E	82→									LG		[-]	**PF0116**	87×66,7×16,5	OK032
1.8 GT	89→									LG		[-]	**PF0116**	87×66,7×16,5	OK032
2.0 E	88→91									LG		[-]	**PF0116**	87×66,7×16,5	OK032
2.0 20V Quattro E	88→91									LG		[-]	**PF0116**	87×66,7×16,5	OK032
2.2	88→91									LG		[-]	**PF0116**	87×66,7×16,5	OK032
2.2i S2 Quattro	90→96									LG		[-]	**PF0116**	87×66,7×16,5	OK032
2.6i E V6 / Quattro	92→96									LG		[-]	**PF0116**	87×66,7×16,5	OK032
2.8i E V6 / Quattro	92→96									LG		[-]	**PF0116**	87×66,7×16,5	OK032
Q3 (8U)															
1.4 TFSI	10/13→	110	150	ATE		[+]	**PF0659**	155,1×66,6×19,5		LG		[-]	**PF0658**	105,3×56,3×17	OK039
2.0 TFSI	06/11→	125	170	ATE	4x4	[+]	**PF0659**	155,1×66,6×19,5		LG		[-]	**PF0658**	105,3×56,3×17	OK039
2.0 TFSI	06/11→	155	211	ATE	4x4	[+]	**PF0659**	155,1×66,6×19,5		LG		[-]	**PF0658**	105,3×56,3×17	OK039
2.0 TDI	06/11→	103	140	ATE		[+]	**PF0659**	155,1×66,6×19,5		LG		[-]	**PF0658**	105,3×56,3×17	OK039
2.0 TDI	06/11→	103	140	ATE	4x4	[+]	**PF0659**	155,1×66,6×19,5		LG		[-]	**PF0658**	105,3×56,3×17	OK039
2.0 TDI	06/11→	130	177	ATE	4x4	[+]	**PF0659**	155,1×66,6×19,5		LG		[-]	**PF0658**	105,3×56,3×17	OK039
Q5 (8R)															
2.0 TDI	08/09→	100	136	LG		[+]	**PF0140**	188,1×72,9×19		LG	1KW,1KE	[-]	**PF0141**	116,4×58,5×17,5	OK039
2.0 TDI	08/09→	105	143	LG		[+]	**PF0140**	188,1×72,9×19		LG	1KW,1KE	[-]	**PF0141**	116,4×58,5×17,5	OK039
2.0 TDI	11/08→	120	163	LG		[+]	**PF0140**	188,1×72,9×19		LG	1KW,1KE	[-]	**PF0141**	116,4×58,5×17,5	OK039
2.0 TDI	11/08→	125	170	LG		[+]	**PF0140**	188,1×72,9×19		LG	1KW,1KE	[-]	**PF0141**	116,4×58,5×17,5	OK039
2.0 TDI	11/13→	140	190	LG		[+]	**PF0140**	188,1×72,9×19		LG	1KW,1KE	[-]	**PF0141**	116,4×58,5×17,5	OK039
2.0 TDI FWD	11/10→	100	136	LG		[+]	**PF0140**	188,1×72,9×19		LG	1KW,1KE	[-]	**PF0141**	116,4×58,5×17,5	OK039
2.0 TDI FWD	11/10→	105	143	LG		[+]	**PF0140**	188,1×72,9×19		LG	1KW,1KE	[-]	**PF0141**	116,4×58,5×17,5	OK039
2.0 TFSI	11/08→	155	211	LG		[+]	**PF0140**	188,1×72,9×19		LG	1KW,1KE	[-]	**PF0141**	116,4×58,5×17,5	OK039
2.0 TFSI	06/12→	155	211							LG	1KW,1KE	[-]	**PF0141**	116,4×58,5×17,5	OK039
2.0 TFSI	08/09→	132	180	LG		[+]	**PF0140**	188,1×72,9×19		LG	1KW,1KE	[-]	**PF0141**	116,4×58,5×17,5	OK039
2.0 TFSI	06/12→	132	180							LG	1KW,1KE	[-]	**PF0141**	116,4×58,5×17,5	OK039
2.0 TFSI hybrid	06/11→	155	211	LG		[+]	**PF0140**	188,1×72,9×19		LG	1KW,1KE	[-]	**PF0141**	116,4×58,5×17,5	OK039
3.0 TDI	11/08→	155	211	LG		[+]	**PF0140**	188,1×72,9×19		LG	1KW,1KE	[-]	**PF0141**	116,4×58,5×17,5	OK039
3.0 TDI	06/12→	155	211							LG	1KW,1KE	[-]	**PF0141**	116,4×58,5×17,5	OK039
3.0 TDI	11/08→	176	240	LG		[+]	**PF0140**	188,1×72,9×19		LG	1KW,1KE	[-]	**PF0141**	116,4×58,5×17,5	OK039
3.0 TDI	06/12→	176	240							LG	1KW,1KE	[-]	**PF0141**	116,4×58,5×17,5	OK039
3.0 TDI	11/13→	190	258	LG		[+]	**PF0140**	188,1×72,9×19		LG	1KW,1KE	[-]	**PF0141**	116,4×58,5×17,5	OK039
3.0 TDI	11/13→	190	258							LG	1KW,1KE	[-]	**PF0141**	116,4×58,5×17,5	OK039
3.2 FSI	11/08→	199	270	LG		[+]	**PF0140**	188,1×72,9×19		LG	1KW,1KE	[-]	**PF0141**	116,4×58,5×17,5	OK039

		KW	CV														
				SiS	i	W.i.	MAGNETI MARELLI	W×H×Th (mm)	Extra kit [Opt]	SiS	i	W.i.	MAGNETI MARELLI	W×H×Th (mm)	Extra kit [Opt]
AUDI															
Q5 (8R)															
SQ5 TDI	06/12 →	230	313							LG	1KW,1KE	[-]	**PF0141**	116,4×58,5×17,5	OK039
SQ5 TFSI	05/13 →	260	354							LG	1KW,1KE	[-]	**PF0141**	116,4×58,5×17,5	OK039
SQ5 TFSI	03/14 →	264	359							LG	1KW,1KE	[-]	**PF0141**	116,4×58,5×17,5	OK039
S3															
1.8 All-wheel Drive	01/00 → 12/04			ATE	(U.S.A.)	[+]	**PF0136**	156,4×74,2×19		LG		[-]	**PF0131**	87×53×17	OK039/ OK041
2.0 All-wheel Drive	01/08 → 12/09			ATE	(U.S.A.)	[+]	**PF0136**	156,4×74,2×19		LG		[-]	**PF0131**	87×53×17	OK039/ OK041
S4 Avant															
2.7 30V AWD	01/01 → 12/02	186	250							LG		[-]	**PF0131**	87×53×17	OK039/ OK041
4.2 40V AWD	01/04 → 12/07	253	340							LG		[-]	**PF0131**	87×53×17	OK039/ OK041
S4 Cabriolet															
4.2 40V AWD	01/05 → 12/09	253	340							LG		[-]	**PF0131**	87×53×17	OK039/ OK041
S4 3 Volumi															
2.2 20V AWD	01/92 → 12/94	169	227							LG		[-]	**PF0131**	87×53×17	OK039/ OK041
2.7 30V AWD	01/00 → 12/02	186	250							LG		[-]	**PF0131**	87×53×17	OK039/ OK041
4.2 40V All-wheel Drive	01/04 → 12/04									LG		[-]	**PF0131**	87×53×17	OK039/ OK041
4.2 40V AWD	01/04 → 12/07	253	340							LG		[-]	**PF0131**	87×53×17	OK039/ OK041
S5 Cabriolet															
3.0 All-wheel Drive	01/10 → 12/10			LG	(U.S.A.)	[+]	**PF0140**	188,1×72,9×19		LG		[-]	**PF0141**	116,4×58,5×17,5	OK039
S5 Coupé															
4.2 All-wheel Drive	01/08 → 12/09			LG	(U.S.A.)	[+]	**PF0140**	188,1×72,9×19		LG		[-]	**PF0141**	116,4×58,5×17,5	OK039
4.2 All-wheel Drive	01/08 → 12/10	253	340	LG	(U.S.A.)	[+]	**PF0140**	188,1×72,9×19		LG		[-]	**PF0141**	116,4×58,5×17,5	OK039
S6 Avant															
4.2 40V AWD	01/02 → 12/03	268	360							LG		[-]	**PF0116**	87×66,7×16,5	OK032
S6 3 Volumi															
2.2 All-wheel Drive	01/96 → 12/97									LG		[-]	**PF0116**	87×66,7×16,5	OK032
2.2 20V AWD	01/95 → 12/95	169	227							LG		[-]	**PF0116**	87×66,7×16,5	OK032
5.2 40V AWD	01/07 → 12/07	324	435							LG		[-]	**PF0116**	87×66,7×16,5	OK032
S8 3 Volumi															
3.6 V8	89 → 94									LG		[-]	**PF0116**	87×66,7×16,5	OK032
4.2 40V AWD	01/01 → 12/03	268	360							LG		[-]	**PF0116**	87×66,7×16,5	OK032
5.2 40V AWD	01/07 → 12/07	324	435							LG		[-]	**PF0116**	87×66,7×16,5	OK032

		KW	CV												
				SiS	i	W.i.	MAGNETI MARELLI	W×H×Th (mm)	Extra kit [Opt]	SiS	i	W.i.	MAGNETI MARELLI	W×H×Th (mm)	Extra kit [Opt]
AUDI															
TT/Roadster (8N)															
1.8i	99→06			ATE		[+]	**PF0260**	156,4×74,2×19		LG		[-]	**PF0131**	87×53×17	OK039/ OK041
1.8i T.	10/98→07/99			ATE		[-]	**PF0137**	156,4×74,2×19		LG		[-]	**PF0131**	87×53×17	OK039/ OK041
1.8i T.	04/99→06			ATE		[+]	**PF0136**	156,4×74,2×19		LG		[-]	**PF0131**	87×53×17	OK039/ OK041
1.8i T. 20V	04/99→06			ATE		[+]	**PF0136**	156,4×74,2×19		LG		[-]	**PF0131**	87×53×17	OK039/ OK041
1.8i	99→06			ATE		[+]	**PF0260**	156,4×74,2×19		LG		[-]	**PF0131**	87×53×17	OK039/ OK041
Roadster	99→06			ATE		[+]	**PF0260**	156,4×74,2×19		LG		[-]	**PF0131**	87×53×17	OK039/ OK041
Roadster	99→06			ATE		[+]	**PF0136**	156,4×74,2×19		LG		[-]	**PF0131**	87×53×17	OK039/ OK041
TT II (8J3)															
1.8 TFSI	06/08→	118	160	ATE		[+]	**PF0135**	155,1×66×20,1		LG		[-]	**PF0601**	105,5×56×16,7	OK039/ OK085
1.8 TFSI	06/08→	118	160	ATE	Ø Disc 345	[+]	**PF0610**	155,3×72,9×20		LG		[-]	**PF0601**	105,5×56×16,7	OK039/ OK085
2.0 Quattro	05/08→	195	265	ATE		[+]	**PF0135**	155,1×66×20,1		LG		[-]	**PF0601**	105,5×56×16,7	OK039/ OK085
2.0 Quattro	05/08→	195	265	ATE	Ø Disc 345	[+]	**PF0610**	155,3×72,9×20		LG		[-]	**PF0601**	105,5×56×16,7	OK039/ OK085
2.0 TDI Quattro	06/08→	125	170	ATE		[+]	**PF0135**	155,1×66×20,1		LG		[-]	**PF0601**	105,5×56×16,7	OK039/ OK085
2.0 TDI Quattro	06/08→	125	170	ATE	Ø Disc 345	[+]	**PF0610**	155,3×72,9×20		LG		[-]	**PF0601**	105,5×56×16,7	OK039/ OK085
2.0 TFSI	05/10→	155	211	ATE		[+]	**PF0135**	155,1×66×20,1		LG		[-]	**PF0601**	105,5×56×16,7	OK039/ OK085
2.0 TFSI	05/10→	155	211	ATE	Ø Disc 345	[+]	**PF0610**	155,3×72,9×20		LG		[-]	**PF0601**	105,5×56×16,7	OK039/ OK085
2.0 TFSI	10/06→	147	200	ATE		[+]	**PF0135**	155,1×66×20,1		LG		[-]	**PF0601**	105,5×56×16,7	OK039/ OK085
2.0 TFSI	10/06→	147	200	ATE	Ø Disc 345	[+]	**PF0610**	155,3×72,9×20		LG		[-]	**PF0601**	105,5×56×16,7	OK039/ OK085
2.0 TFSI Quattro	05/10→	155	211	ATE		[+]	**PF0135**	155,1×66×20,1		LG		[-]	**PF0601**	105,5×56×16,7	OK039/ OK085
2.0 TFSI Quattro	05/10→	155	211	ATE	Ø Disc 345	[+]	**PF0610**	155,3×72,9×20		LG		[-]	**PF0601**	105,5×56×16,7	OK039/ OK085
2.0 TFSI Quattro	06/08→	200	272	ATE		[+]	**PF0135**	155,1×66×20,1		LG		[-]	**PF0601**	105,5×56×16,7	OK039/ OK085
2.0 TFSI Quattro	06/08→	200	272	ATE	Ø Disc 345	[+]	**PF0610**	155,3×72,9×20		LG		[-]	**PF0601**	105,5×56×16,7	OK039/ OK085

		KW	CV	SiS	i	W.i.	MAGNETI MARELLI	W×H×Th (mm)	Extra kit [Opt]	SiS	i	W.i.	MAGNETI MARELLI	W×H×Th (mm)	Extra kit [Opt]
AUDI															
TT II (8J3)															
2.0 TFSI Quattro	06/08→	147	200	ATE		[+]	**PF0135**	155,1×66×20,1		LG		[-]	**PF0601**	105,5×56×16,7	OK039/ OK085
2.0 TFSI Quattro	06/08→	147	200	ATE	Ø Disc 345	[+]	**PF0610**	155,3×72,9×20		LG		[-]	**PF0601**	105,5×56×16,7	OK039/ OK085
2.0 TFSI Quattro	06/08→	145	197	ATE		[+]	**PF0135**	155,1×66×20,1		LG		[-]	**PF0601**	105,5×56×16,7	OK039/ OK085
2.0 TFSI Quattro	06/08→	145	197	ATE	Ø Disc 345	[+]	**PF0610**	155,3×72,9×20		LG		[-]	**PF0601**	105,5×56×16,7	OK039/ OK085
2.5 TFSI Quattro	05/11→	265	360							LG		[-]	**PF0601**	105,5×56×16,7	OK039/ OK085
2.5 TFSI Quattro	05/09→	250	340							LG		[-]	**PF0601**	105,5×56×16,7	OK039/ OK085
3.2 V6 Quattro	10/06→	184	250	ATE		[+]	**PF0135**	155,1×66×20,1		LG		[-]	**PF0601**	105,5×56×16,7	OK039/ OK085
3.2 V6 Quattro	10/06→	184	250	ATE	Ø Disc 345	[+]	**PF0610**	155,3×72,9×20		LG		[-]	**PF0601**	105,5×56×16,7	OK039/ OK085
TT II Roadster (8J9)															
1.8 TFSI	06/08→	118	160	ATE		[+]	**PF0135**	155,1×66×20,1		LG		[-]	**PF0601**	105,5×56×16,7	OK039/ OK085
1.8 TFSI	06/08→	118	160	ATE	Ø Disc 345	[+]	**PF0610**	155,3×72,9×20		LG		[-]	**PF0601**	105,5×56×16,7	OK039/ OK085
2.0 Quattro	05/08→	195	265	ATE		[+]	**PF0135**	155,1×66×20,1		LG		[-]	**PF0601**	105,5×56×16,7	OK039/ OK085
2.0 Quattro	05/08→	195	265	ATE	Ø Disc 345	[+]	**PF0610**	155,3×72,9×20		LG		[-]	**PF0601**	105,5×56×16,7	OK039/ OK085
2.0 TDI Quattro	06/08→	125	170	ATE		[+]	**PF0135**	155,1×66×20,1		LG		[-]	**PF0601**	105,5×56×16,7	OK039/ OK085
2.0 TDI Quattro	06/08→	125	170	ATE	Ø Disc 345	[+]	**PF0610**	155,3×72,9×20		LG		[-]	**PF0601**	105,5×56×16,7	OK039/ OK085
2.0 TFSI	05/10→	155	211	ATE		[+]	**PF0135**	155,1×66×20,1		LG		[-]	**PF0601**	105,5×56×16,7	OK039/ OK085
2.0 TFSI	05/10→	155	211	ATE	Ø Disc 345	[+]	**PF0610**	155,3×72,9×20		LG		[-]	**PF0601**	105,5×56×16,7	OK039/ OK085
2.0 TFSI	02/07→	147	200	ATE		[+]	**PF0135**	155,1×66×20,1		LG		[-]	**PF0601**	105,5×56×16,7	OK039/ OK085
2.0 TFSI	02/07→	147	200	ATE	Ø Disc 345	[+]	**PF0610**	155,3×72,9×20		LG		[-]	**PF0601**	105,5×56×16,7	OK039/ OK085
2.0 TFSI Quattro	05/10→	155	211	ATE		[+]	**PF0135**	155,1×66×20,1		LG		[-]	**PF0601**	105,5×56×16,7	OK039/ OK085
2.0 TFSI Quattro	05/10→	155	211	ATE	Ø Disc 345	[+]	**PF0610**	155,3×72,9×20		LG		[-]	**PF0601**	105,5×56×16,7	OK039/ OK085
2.0 TFSI Quattro	06/08→	200	272	ATE		[+]	**PF0135**	155,1×66×20,1		LG		[-]	**PF0601**	105,5×56×16,7	OK039/ OK085

		KW	CV	SiS	i	W.i.	MAGNETI MARELLI	W×H×Th (mm)	Extra kit [Opt]	SiS	i	W.i.	MAGNETI MARELLI	W×H×Th (mm)	Extra kit [Opt]
AUDI															
TT II Roadster (8J9)															
2.0 TFSI Quattro	06/08 →	200	272	ATE	Ø Disc 345	[+]	**PF0610**	155,3×72,9×20		LG		[-]	**PF0601**	105,5×56×16,7	OK039/ OK085
2.0 TFSI Quattro	06/08 →	147	200	ATE		[+]	**PF0135**	155,1×66×20,1		LG		[-]	**PF0601**	105,5×56×16,7	OK039/ OK085
2.0 TFSI Quattro	06/08 →	147	200	ATE	Ø Disc 345	[+]	**PF0610**	155,3×72,9×20		LG		[-]	**PF0601**	105,5×56×16,7	OK039/ OK085
2.0 TFSI Quattro	06/08 →	145	197	ATE		[+]	**PF0135**	155,1×66×20,1		LG		[-]	**PF0601**	105,5×56×16,7	OK039/ OK085
2.0 TFSI Quattro	06/08 →	145	197	ATE	Ø Disc 345	[+]	**PF0610**	155,3×72,9×20		LG		[-]	**PF0601**	105,5×56×16,7	OK039/ OK085
2.5 TFSI Quattro	05/09 →	250	340	ATE		[+]	**PF0135**	155,1×66×20,1		LG		[-]	**PF0601**	105,5×56×16,7	OK039/ OK085
2.5 TFSI Quattro	05/09 →	250	340	ATE	Ø Disc 345	[+]	**PF0610**	155,3×72,9×20		LG		[-]	**PF0601**	105,5×56×16,7	OK039/ OK085
3.2 V6 Quattro	02/07 →	184	250	ATE		[+]	**PF0135**	155,1×66×20,1		LG		[-]	**PF0601**	105,5×56×16,7	OK039/ OK085
3.2 V6 Quattro	02/07 →	184	250	ATE	Ø Disc 345	[+]	**PF0610**	155,3×72,9×20							
3.2 V6 Quattro	02/07 →	184	250							LG		[-]	**PF0601**	105,5×56×16,7	OK039/ OK085
AUTOBIANCHI															
Y10 (156)															
Missoni	85 →			LG		[+]	**PF0105**	104×66,4×17	OK030						
Turbo Martini	85 →			LG		[+]	**PF0105**	104×66,4×17	OK030						
1.0 Turbo	03/85 → 02/89	62	84	LG	(156D)	[+]	**PF0105**	104×66,4×17	OK030						
1.0 Fire	03/85 → 02/90	37	50	BD		[+]	**PF0212**	108,8×47,4×18	OK028						
1.0 Fire	03/85 → 06/89	33	45	BD	(156AA)	[+]	**PF0212**	108,8×47,4×18	OK028						
1.0 Fire CAT	10/87 → 02/92	33	45	BD	(156AE)	[+]	**PF0212**	108,8×47,4×18	OK028						
1.0 Fire	06/85 → 06/91	32	44	BD	(156B, 156AD)	[+]	**PF0212**	108,8×47,4×18	OK028						
1.0 Fire	03/85 → 07/89	41	56	BD	(156C)	[+]	**PF0212**	108,8×47,4×18	OK028						
1.0 Fire 4WD	12/86 → 02/89	32	44	BD		[+]	**PF0212**	108,8×47,4×18	OK028						
1.0 Fire 4WD	12/87 → 02/90	37	50	BD		[+]	**PF0212**	108,8×47,4×18	OK028						
1.0 Fire 4WD	12/87 → 02/92	33	45	BD	(156AE)	[+]	**PF0212**	108,8×47,4×18	OK028						
1.1 Avenue	01/95 → 12/95	40	54	BD	(156AG)	[+]	**PF0212**	108,8×47,4×18	OK028						
1.1 Avenue 4WD	01/95 → 12/95	40	54	BD	(156AG)	[+]	**PF0212**	108,8×47,4×18	OK028						
1.1 i.e	08/89 → 06/92	42	57	BD	(156AC)	[+]	**PF0212**	108,8×47,4×18	OK028						
1.1 i.e 4WD	08/89 → 06/92	42	57	BD	(156AC)	[+]	**PF0212**	108,8×47,4×18	OK028						
1.1 i.e. Fire	07/89 → 09/95	37	50	BD	(156AG)	[+]	**PF0212**	108,8×47,4×18	OK028						
1.1 i.e. Fire 4WD	09/92 → 12/95	37	50	BD	(156AG)	[+]	**PF0212**	108,8×47,4×18	OK028						
1.3 i.e. Fire	11/87 → 05/93	56	76	BD	(156AB)	[+]	**PF0212**	108,8×47,4×18	OK028						
1.3 i.e. Fire	02/89 → 12/95	53	72	BD	(156AF)	[+]	**PF0212**	108,8×47,4×18	OK028						

		KW	CV	SiS	i	W.i.	MAGNETI MARELLI	W×H×Th (mm)	Extra kit [Opt]	SiS	i	W.i.	MAGNETI MARELLI	W×H×Th (mm)	Extra kit [Opt]
BEDFORD															
Astra Van															
1.3	09/84 → 09/89	55	75	DM		[-]	**PF0354**	100×59×15,6							
1.3	09/84 → 09/89	44	60	DM		[-]	**PF0354**	100×59×15,6							
1.3	09/84 → 09/89	34	46	DM		[-]	**PF0354**	100×59×15,6							
1.4	09/89 → 08/91	44	60	DM		[-]	**PF0354**	100×59×15,6							
1.6	09/84 → 08/91	66	90	DM		[-]	**PF0354**	100×59×15,6							
1.6 D	07/82 → 08/84	40	54	DM		[-]	**PF0354**	100×59×15,6							
1.6 D	09/87 → 08/89	42	57	DM		[-]	**PF0354**	100×59×15,6							
1.6 D	09/85 → 08/88	40	54	DM		[-]	**PF0354**	100×59×15,6							
1.7 D	09/88 → 08/91	42	57	DM		[-]	**PF0354**	100×59×15,6							
BMW															
1 (E81, E87)															
116d	03/09 →	85	116	LG	- M-Technik	[o]	**PF0147**	131,6×53,3×17,8	OK032/ OK055/ OK063	LG	- M-Technik	[-]	**PF0148**	95,4×45×17,2	OK032/ OK064
116i	09/04 →	85	115	LG	- M-Technik	[o]	**PF0147**	131,6×53,3×17,8	OK032/ OK055/ OK063	LG	- M-Technik	[-]	**PF0148**	95,4×45×17,2	OK032/ OK064
116i	09/07 →	90	122	LG	- M-Technik	[o]	**PF0147**	131,6×53,3×17,8	OK032/ OK055/ OK063	LG	- M-Technik	[-]	**PF0148**	95,4×45×17,2	OK032/ OK064
118i	09/04 →	95	129	LG	- M-Technik	[o]	**PF0147**	131,6×53,3×17,8	OK032/ OK055/ OK063	LG	- M-Technik	[-]	**PF0148**	95,4×45×17,2	OK032/ OK064
118i	04/07 →	105	143	LG	- M-Technik	[o]	**PF0147**	131,6×53,3×17,8	OK032/ OK055/ OK063	LG	- M-Technik	[-]	**PF0148**	95,4×45×17,2	OK032/ OK064
118d	09/04 →	90	122	LG	- M-Technik	[o]	**PF0147**	131,6×53,3×17,8	OK032/ OK055/ OK063	LG	- M-Technik	[-]	**PF0148**	95,4×45×17,2	OK032/ OK064
118d	04/07 →	105	143	LG	- M-Technik	[o]	**PF0147**	131,6×53,3×17,8	OK032/ OK055/ OK063	LG	- M-Technik	[-]	**PF0148**	95,4×45×17,2	OK032/ OK064
118d	03/07 →	100	136	LG	- M-Technik	[o]	**PF0147**	131,6×53,3×17,8	OK032/ OK055/ OK063	LG	- M-Technik	[-]	**PF0148**	95,4×45×17,2	OK032/ OK064
120i	09/04 →	110	150	ATE	- M-Technik	[o]	**PF0622**	149,5×57,6×17,8		LG	- M-Technik	[-]	**PF0148**	95,4×45×17,2	OK032/ OK064
120i	04/07 →	125	170	ATE	- M-Technik	[o]	**PF0622**	149,5×57,6×17,8		LG	- M-Technik	[-]	**PF0148**	95,4×45×17,2	OK032/ OK064
120i	03/07 →	115	156	ATE	- M-Technik	[o]	**PF0622**	149,5×57,6×17,8		LG	- M-Technik	[-]	**PF0148**	95,4×45×17,2	OK032/ OK064
120i	03/07 →	120	163	ATE	- M-Technik	[o]	**PF0622**	149,5×57,6×17,8		LG	- M-Technik	[-]	**PF0148**	95,4×45×17,2	OK032/ OK064

		KW	CV														
				SiS	i	W.i.	MAGNETI MARELLI	W×H×Th (mm)	Extra kit [Opt]	SiS	i	W.i.	MAGNETI MARELLI	W×H×Th (mm)	Extra kit [Opt]
BMW															
1 (E81, E87)															
120d	09/04 →	120	163	ATE	- M-Technik	[o]	**PF0622**	149,5×57,6×17,8		ATE	+M-Technik	[-]	**PF0149**	123,1×43,8×17,3	
120d	03/07 →	130	177	ATE	- M-Technik	[o]	**PF0622**	149,5×57,6×17,8		ATE	+M-Technik	[-]	**PF0624**	123,1×48,3×17,3	
130i	09/05 →	195	265	ATE	- M-Technik	[o]	**PF0507**	154,8×63,3×20	OK048	ATE	+M-Technik	[-]	**PF0149**	123,1×43,8×17,3	
130i	03/05 →	190	258	ATE	- M-Technik	[o]	**PF0507**	154,8×63,3×20	OK048	ATE	+M-Technik	[-]	**PF0624**	123,1×48,3×17,3	
1 Coupé (E82)															
118d	09/09 → 14	100	136	ATE	- M-Technik	[o]	**PF0507**	154,8×63,3×20	OK048	ATE	- M-Technik	[-]	**PF0149**	123,1×43,8×17,3	
118d	09/09 → 14	100	136	ATE	- M-Technik	[o]	**PF0507**	154,8×63,3×20	OK048	ATE	Ø Disc 248	[-]	**PF0624**	123,1×48,3×17,3	
118d	09/09 → 14	105	143	ATE	- M-Technik	[o]	**PF0507**	154,8×63,3×20	OK048	ATE	- M-Technik	[-]	**PF0149**	123,1×43,8×17,3	
118d	09/09 → 14	105	143	ATE	- M-Technik	[o]	**PF0507**	154,8×63,3×20	OK048	ATE	Ø Disc 248	[-]	**PF0624**	123,1×48,3×17,3	
120d	10/07 → 14	130	177	ATE	- M-Technik	[o]	**PF0507**	154,8×63,3×20	OK048	ATE	- M-Technik	[-]	**PF0149**	123,1×43,8×17,3	
120d	10/07 → 14	130	177	ATE	- M-Technik	[o]	**PF0507**	154,8×63,3×20	OK048	ATE	Ø Disc 248	[-]	**PF0624**	123,1×48,3×17,3	
120d	10/07 → 14	120	163	ATE	- M-Technik	[o]	**PF0507**	154,8×63,3×20	OK048	ATE	- M-Technik	[-]	**PF0149**	123,1×43,8×17,3	
120d	10/07 → 14	120	163	ATE	- M-Technik	[o]	**PF0507**	154,8×63,3×20	OK048	ATE	Ø Disc 248	[-]	**PF0624**	123,1×48,3×17,3	
120i	09/09 → 14	125	170	ATE	- M-Technik	[o]	**PF0507**	154,8×63,3×20	OK048	ATE	- M-Technik	[-]	**PF0149**	123,1×43,8×17,3	
120i	09/09 → 14	125	170	ATE	- M-Technik	[o]	**PF0507**	154,8×63,3×20	OK048	ATE	Ø Disc 248	[-]	**PF0624**	123,1×48,3×17,3	
123d	10/07 → 14	150	204	ATE	- M-Technik	[o]	**PF0507**	154,8×63,3×20	OK048	ATE	- M-Technik	[-]	**PF0149**	123,1×43,8×17,3	
123d	10/07 → 14	150	204	ATE	- M-Technik	[o]	**PF0507**	154,8×63,3×20	OK048	ATE	Ø Disc 248	[-]	**PF0624**	123,1×48,3×17,3	
125i	10/07 → 14	160	218	ATE	- M-Technik	[o]	**PF0507**	154,8×63,3×20	OK048	ATE	- M-Technik	[-]	**PF0149**	123,1×43,8×17,3	
125i	10/07 → 14	160	218	ATE	- M-Technik	[o]	**PF0507**	154,8×63,3×20	OK048	ATE	Ø Disc 248	[-]	**PF0624**	123,1×48,3×17,3	
135i	10/07 → 14	225	306	ATE	- M-Technik	[o]	**PF0507**	154,8×63,3×20	OK048	ATE	- M-Technik	[-]	**PF0149**	123,1×43,8×17,3	
135i	10/07 → 14	225	306	ATE	- M-Technik	[o]	**PF0507**	154,8×63,3×20	OK048	ATE	Ø Disc 248	[-]	**PF0624**	123,1×48,3×17,3	
3.0 M	04/11 → 14	250	340	ATE	- M-Technik	[o]	**PF0507**	154,8×63,3×20	OK048	ATE	- M-Technik	[-]	**PF0149**	123,1×43,8×17,3	
3.0 M	04/11 → 14	250	340	ATE	- M-Technik	[o]	**PF0507**	154,8×63,3×20	OK048	ATE	Ø Disc 248	[-]	**PF0624**	123,1×48,3×17,3	
1 Cabriolet (E88)															
118i	03/08 → 14	105	143	LG	- M-Technik	[o]	**PF0147**	131,6×53,3×17,8	OK032/ OK055/ OK063	ATE		[-]	**PF0149**	123,1×43,8×17,3	
118i	03/08 → 14	105	143	LG	- M-Technik	[o]	**PF0147**	131,6×53,3×17,8	OK032/ OK055/ OK063	ATE	Ø Disc 248	[-]	**PF0624**	123,1×48,3×17,3	
120i	03/08 → 14	120	163	LG	- M-Technik	[o]	**PF0147**	131,6×53,3×17,8	OK032/ OK055/ OK063	ATE		[-]	**PF0149**	123,1×43,8×17,3	
120i	03/08 → 14	120	163	LG	- M-Technik	[o]	**PF0147**	131,6×53,3×17,8	OK032/ OK055/ OK063	ATE	Ø Disc 248	[-]	**PF0624**	123,1×48,3×17,3	
120i	03/08 → 14	125	170	LG	- M-Technik	[o]	**PF0147**	131,6×53,3×17,8	OK032/ OK055/ OK063	ATE		[-]	**PF0149**	123,1×43,8×17,3	
120i	03/08 → 14	125	170	LG	- M-Technik	[o]	**PF0147**	131,6×53,3×17,8	OK032/ OK055/ OK063	ATE	Ø Disc 248	[-]	**PF0624**	123,1×48,3×17,3	

		KW	CV	SiS	i	W.i.	MAGNETI MARELLI	W×H×Th (mm)	Extra kit [Opt]	SiS	i	W.i.	MAGNETI MARELLI	W×H×Th (mm)	Extra kit [Opt]
BMW															
1 Cabriolet (E88)															
120d	03/08 → 14	130	177	LG	- M-Technik	[o]	**PF0147**	131,6×53,3×17,8	OK032/ OK055/ OK063	ATE		[-]	**PF0149**	123,1×43,8×17,3	
120d	03/08 → 14	130	177	LG	- M-Technik	[o]	**PF0147**	131,6×53,3×17,8	OK032/ OK055/ OK063	ATE	Ø Disc 248	[-]	**PF0624**	123,1×48,3×17,3	
120d	03/08 → 14	120	163	LG	- M-Technik	[o]	**PF0147**	131,6×53,3×17,8	OK032/ OK055/ OK063	ATE		[-]	**PF0149**	123,1×43,8×17,3	
120d	03/08 → 14	120	163	LG	- M-Technik	[o]	**PF0147**	131,6×53,3×17,8	OK032/ OK055/ OK063	ATE	Ø Disc 248	[-]	**PF0624**	123,1×48,3×17,3	
125i	03/08 → 14	160	218	ATE	- M-Technik	[o]	**PF0507**	154,8×63,3×20	OK048	ATE		[-]	**PF0149**	123,1×43,8×17,3	
125i	03/08 → 14	160	218	ATE	- M-Technik	[o]	**PF0507**	154,8×63,3×20	OK048	ATE	Ø Disc 248	[-]	**PF0624**	123,1×48,3×17,3	
135i	03/08 → 14	225	306	ATE	- M-Technik	[o]	**PF0507**	154,8×63,3×20	OK048	ATE		[-]	**PF0149**	123,1×43,8×17,3	
135i	03/08 → 14	225	306	ATE	- M-Technik	[o]	**PF0507**	154,8×63,3×20	OK048	ATE	Ø Disc 248	[-]	**PF0624**	123,1×48,3×17,3	
3 (E30)															
316i	91 →									ATE		[-]	**PF0154**	123×45×17	
318i	92 →									ATE		[-]	**PF0154**	123×45×17	
318i 16V	94 →									ATE		[-]	**PF0154**	123×45×17	
318i IS 16V	92 →									ATE		[-]	**PF0154**	123×45×17	
318 TD / Compact	95 →									ATE		[-]	**PF0154**	123×45×17	
318 TD / Touring	95 →									ATE		[-]	**PF0154**	123×45×17	
320 24V	91 →									ATE		[-]	**PF0154**	123×45×17	
323 24V	95 →									ATE		[-]	**PF0154**	123×45×17	
325 24V	91 →									ATE		[-]	**PF0154**	123×45×17	
325 TD	92 →									ATE		[-]	**PF0154**	123×45×17	
3 Coupé (E30)															
316i	91 →									ATE		[-]	**PF0154**	123×45×17	
318i 16V	92 →									ATE		[-]	**PF0154**	123×45×17	
320 24V	92 →									ATE		[-]	**PF0154**	123×45×17	
323 24V	95 →									ATE		[-]	**PF0154**	123×45×17	
3 Cabriolet (E30)															
316 i	09/87 → 06/90	73	99							ATE		[-]	**PF0154**	123×45×17	
3 Compact (E46)															
2.0 TD	10/01 → 12/02	100	136	ATE		[-]	**PF0155**	150,2×57,8×17,8	OK019	ATE		[o]	**PF0157**	123,1×43,7×17,3	OK022
316 ti	06/01 → 02/05	85	115	ATE		[-]	**PF0155**	150,2×57,8×17,8	OK019	ATE		[o]	**PF0157**	123,1×43,7×17,3	OK022
316 ti	06/02 → 02/05	77	105	ATE		[-]	**PF0155**	150,2×57,8×17,8	OK019	ATE		[o]	**PF0157**	123,1×43,7×17,3	OK022
316 ti	06/02 → 02/05	85	115	ATE		[-]	**PF0155**	150,2×57,8×17,8	OK019	ATE		[o]	**PF0157**	123,1×43,7×17,3	OK022
318 TD	03/03 → 02/05	85	115	ATE		[-]	**PF0155**	150,2×57,8×17,8	OK019	ATE		[o]	**PF0157**	123,1×43,7×17,3	OK022
318 ti	09/01 → 02/05	105	143	ATE		[-]	**PF0155**	150,2×57,8×17,8	OK019	ATE		[o]	**PF0157**	123,1×43,7×17,3	OK022
320 TD	09/01 → 02/05	110	150	ATE		[-]	**PF0155**	150,2×57,8×17,8	OK019	ATE		[o]	**PF0157**	123,1×43,7×17,3	OK022

		KW	CV	SiS	i	W.i.	MAGNETI MARELLI	W×H×Th (mm)	Extra kit [Opt]	SiS	i	W.i.	MAGNETI MARELLI	W×H×Th (mm)	Extra kit [Opt]
BMW															
3 Compact (E46)															
325 ti	06/01 → 02/05	141	192	ATE		[-]	**PF0155**	150,2×57,8×17,8	OK019	ATE		[o]	**PF0157**	123,1×43,7×17,3	OK022
3 (E46)															
316 i	09/98 → 02/05	77	105	ATE		[-]	**PF0155**	150,2×57,8×17,8	OK019	ATE		[o]	**PF0157**	123,1×43,7×17,3	OK022
316 i	04/00 → 02/05	77	105	ATE		[-]	**PF0155**	150,2×57,8×17,8	OK019	ATE		[o]	**PF0157**	123,1×43,7×17,3	OK022
316 i	02/02 → 02/05	85	115	ATE		[-]	**PF0155**	150,2×57,8×17,8	OK019	ATE		[o]	**PF0157**	123,1×43,7×17,3	OK022
316 i	06/02 → 02/05	85	115	ATE		[-]	**PF0155**	150,2×57,8×17,8	OK019	ATE		[o]	**PF0157**	123,1×43,7×17,3	OK022
318 d	09/01 → 03/03	85	116	ATE		[-]	**PF0155**	150,2×57,8×17,8	OK019	ATE		[o]	**PF0157**	123,1×43,7×17,3	OK022
318 d	03/03 → 02/05	85	116	ATE		[-]	**PF0155**	150,2×57,8×17,8	OK019	ATE		[o]	**PF0157**	123,1×43,7×17,3	OK022
318 i	02/98 → 09/01	87	118	ATE		[-]	**PF0155**	150,2×57,8×17,8	OK019	ATE		[o]	**PF0157**	123,1×43,7×17,3	OK022
318 i	09/01 → 02/05	105	143	ATE		[-]	**PF0155**	150,2×57,8×17,8	OK019	ATE		[o]	**PF0157**	123,1×43,7×17,3	OK022
320 d	04/98 → 09/01	100	136	ATE		[-]	**PF0155**	150,2×57,8×17,8	OK019	ATE		[o]	**PF0157**	123,1×43,7×17,3	OK022
320 d	09/01 → 02/05	110	150	ATE		[-]	**PF0155**	150,2×57,8×17,8	OK019	ATE		[o]	**PF0157**	123,1×43,7×17,3	OK022
320 i	03/98 → 09/00	110	150	ATE		[-]	**PF0155**	150,2×57,8×17,8	OK019	ATE		[o]	**PF0157**	123,1×43,7×17,3	OK022
320 i	09/00 → 02/05	125	170	ATE		[-]	**PF0155**	150,2×57,8×17,8	OK019	ATE		[o]	**PF0157**	123,1×43,7×17,3	OK022
323 i	03/98 → 09/00	125	170	ATE		[-]	**PF0155**	150,2×57,8×17,8	OK019	ATE		[o]	**PF0157**	123,1×43,7×17,3	OK022
325 i	09/00 → 02/05	141	192	ATE		[-]	**PF0155**	150,2×57,8×17,8	OK019	ATE		[o]	**PF0157**	123,1×43,7×17,3	OK022
325 xi	09/00 → 02/05	141	192	ATE		[-]	**PF0155**	150,2×57,8×17,8	OK019	ATE		[o]	**PF0157**	123,1×43,7×17,3	OK022
328i 24V	98 → 05			ATE		[-]	**PF0155**	150,2×57,8×17,8	OK019	ATE		[o]	**PF0157**	123,1×43,7×17,3	OK022
330 24V	00 → 05			ATE		[o]	**PF0159**	156,3×63,3×20							
330 TD 24V	99 → 05			ATE		[o]	**PF0159**	156,3×63,3×20							
330 D	10/99 → 05			ATE		[o]	**PF0153**	156,3×63,3×20		ATE		[o]	**PF0152**	123,1×59,2×17	
330i	06/00 → 05			ATE		[o]	**PF0153**	156,3×63,3×20		ATE		[o]	**PF0152**	123,1×59,2×17	
330i	01/05 →			ATE		[o]	**PF0160**	154,8×63,3×20	OK047	ATE		[-]	**PF0149**	123,1×43,8×17,3	
330i	01/05 →									ATE		[o]	**PF0486**	123,1×59,2×17	
330xd	06/00 → 05			ATE		[o]	**PF0153**	156,3×63,3×20		ATE		[o]	**PF0152**	123,1×59,2×17	
330xi	06/00 → 05			ATE		[o]	**PF0153**	156,3×63,3×20		ATE		[o]	**PF0152**	123,1×59,2×17	
330i	06/00 → 05			ATE		[o]	**PF0153**	156,3×63,3×20		ATE		[o]	**PF0152**	123,1×59,2×17	
330 D	10/99 → 05			ATE		[o]	**PF0153**	156,3×63,3×20		ATE		[o]	**PF0152**	123,1×59,2×17	
330	05 → 07			ATE		[-]	**PF0155**	150,2×57,8×17,8	OK019	ATE		[o]	**PF0157**	123,1×43,7×17,3	OK022
330cd	08/05 → 07			ATE		[-]	**PF0155**	150,2×57,8×17,8	OK019	ATE		[o]	**PF0157**	123,1×43,7×17,3	OK022
330	06/00 → 06			ATE		[o]	**PF0153**	156,3×63,3×20		ATE		[o]	**PF0152**	123,1×59,2×17	
330cd	03/03 → 06			ATE		[o]	**PF0153**	156,3×63,3×20		ATE		[o]	**PF0152**	123,1×59,2×17	
3 Cabriolet (E46)															
318 Ci	09/01 →	105	143	ATE		[-]	**PF0155**	150,2×57,8×17,8	OK019	ATE		[o]	**PF0157**	123,1×43,7×17,3	OK022
318 Ci	02/05 →	110	150	ATE		[-]	**PF0155**	150,2×57,8×17,8	OK019	ATE		[o]	**PF0157**	123,1×43,7×17,3	OK022
320 Cd	02/05 →	110	150	ATE		[-]	**PF0155**	150,2×57,8×17,8	OK019	ATE		[o]	**PF0157**	123,1×43,7×17,3	OK022
320 Ci	09/00 →	125	170	ATE		[-]	**PF0155**	150,2×57,8×17,8	OK019	ATE		[o]	**PF0157**	123,1×43,7×17,3	OK022
323 Ci	04/00 → 09/00	125	170	ATE		[-]	**PF0155**	150,2×57,8×17,8	OK019	ATE		[o]	**PF0157**	123,1×43,7×17,3	OK022
325 Ci	09/00 →	141	192	ATE		[-]	**PF0155**	150,2×57,8×17,8	OK019	ATE		[o]	**PF0157**	123,1×43,7×17,3	OK022
330 Cd	08/05 →	150	204	ATE		[-]	**PF0155**	150,2×57,8×17,8	OK019	ATE		[o]	**PF0157**	123,1×43,7×17,3	OK022
330 Ci	06/00 →	170	231	ATE		[-]	**PF0155**	150,2×57,8×17,8	OK019	ATE		[o]	**PF0157**	123,1×43,7×17,3	OK022
M3 3.2	04/01 →	252	343	ATE		[-]	**PF0155**	150,2×57,8×17,8	OK019	ATE		[o]	**PF0157**	123,1×43,7×17,3	OK022

		KW	CV												
				SiS	i	W.i.	MAGNETI MARELLI	W×H×Th (mm)	Extra kit [Opt]	SiS	i	W.i.	MAGNETI MARELLI	W×H×Th (mm)	Extra kit [Opt]
BMW															
3 (E90)															
318d	01/05→			ATE		[o]	**PF0622**	149,5×57,6×17,8		LG		[-]	**PF0148**	95,4×45×17,2	OK032/ OK064
318d	01/05→	105	143	ATE	Ø Disc 248	[-]	**PF0150**	155,1×68,3×20,2		ATE		[o]	**PF0486**	123,1×59,2×17	
318i	01/05→			ATE		[o]	**PF0622**	149,5×57,6×17,8		LG		[-]	**PF0148**	95,4×45×17,2	OK032/ OK064
318i	01/05→	105	143	ATE	Ø Disc 248	[-]	**PF0150**	155,1×68,3×20,2		ATE		[o]	**PF0486**	123,1×59,2×17	
320d	01/05→			ATE	- M-Technik	[o]	**PF0160**	154,8×63,3×20	OK047	ATE		[-]	**PF0149**	123,1×43,8×17,3	
320d	01/05→			ATE	- M-Technik	[o]	**PF0156**	154,8×63,3×20		ATE		[-]	**PF0149**	123,1×43,8×17,3	
320d	01/05→			ATE		[o]	**PF0622**	149,5×57,6×17,8		ATE		[-]	**PF0149**	123,1×43,8×17,3	
320d	01/05→	130	177	ATE	Ø Disc 248	[-]	**PF0150**	155,1×68,3×20,2		ATE		[-]	**PF0624**	123,1×48,3×17,3	
320d	01/05→	135	184	ATE	Ø Disc 248	[-]	**PF0150**	155,1×68,3×20,2		ATE		[o]	**PF0486**	123,1×59,2×17	
320i	01/05→	115	156	ATE		[o]	**PF0622**	149,5×57,6×17,8		ATE		[-]	**PF0149**	123,1×43,8×17,3	
320i	01/05→	110	150	ATE	Ø Disc 248	[-]	**PF0150**	155,1×68,3×20,2		ATE		[-]	**PF0624**	123,1×48,3×17,3	
320i	01/05→	125	170	ATE	Ø Disc 248	[-]	**PF0150**	155,1×68,3×20,2		ATE		[o]	**PF0486**	123,1×59,2×17	
323i	01/05→	130	177	ATE	Ø Disc 248	[-]	**PF0150**	155,1×68,3×20,2		ATE		[o]	**PF0486**	123,1×59,2×17	
325i	01/05→			ATE	- M-Technik	[o]	**PF0160**	154,8×63,3×20	OK047	ATE		[-]	**PF0149**	123,1×43,8×17,3	
325i	01/05→			ATE	- M-Technik	[o]	**PF0156**	154,8×63,3×20		ATE		[-]	**PF0149**	123,1×43,8×17,3	
325i	01/05→	160	218	ATE	Ø Disc 248	[-]	**PF0150**	155,1×68,3×20,2		ATE		[-]	**PF0624**	123,1×48,3×17,3	
325i	01/05→	160	218	ATE	Ø Disc 248	[-]	**PF0150**	155,1×68,3×20,2		ATE		[o]	**PF0486**	123,1×59,2×17	
330i	01/05→			ATE	- M-Technik	[o]	**PF0160**	154,8×63,3×20	OK047	ATE		[-]	**PF0624**	123,1×48,3×17,3	
330i	01/05→			ATE	- M-Technik	[o]	**PF0156**	154,8×63,3×20		ATE		[-]	**PF0624**	123,1×48,3×17,3	
330i	01/05→			ATE	Ø Disc 248	[-]	**PF0581**	155,1×68,3×20,2		ATE		[o]	**PF0486**	123,1×59,2×17	
330d	01/05→			ATE	- M-Technik	[o]	**PF0160**	154,8×63,3×20	OK047	ATE		[-]	**PF0624**	123,1×48,3×17,3	
330d	01/05→			ATE	- M-Technik	[o]	**PF0156**	154,8×63,3×20		ATE		[-]	**PF0624**	123,1×48,3×17,3	
330d	01/05→			ATE	Ø Disc 248	[-]	**PF0581**	155,1×68,3×20,2		ATE		[o]	**PF0486**	123,1×59,2×17	
335i	01/05→			ATE	- M-Technik	[o]	**PF0160**	154,8×63,3×20	OK047	ATE		[-]	**PF0624**	123,1×48,3×17,3	
335i	01/05→			ATE	- M-Technik	[o]	**PF0156**	154,8×63,3×20		ATE		[-]	**PF0624**	123,1×48,3×17,3	
335i	01/05→			ATE	Ø Disc 248	[-]	**PF0581**	155,1×68,3×20,2		ATE		[o]	**PF0486**	123,1×59,2×17	
330xi	01/05→			ATE		[o]	**PF0160**	154,8×63,3×20	OK047	ATE		[-]	**PF0624**	123,1×48,3×17,3	
330xi	01/05→			ATE	- M-Technik	[o]	**PF0156**	154,8×63,3×20		ATE		[-]	**PF0624**	123,1×48,3×17,3	
330xi	01/05→			ATE	Ø Disc 248	[-]	**PF0581**	155,1×68,3×20,2		ATE		[o]	**PF0486**	123,1×59,2×17	
330xd	01/05→			ATE	- M-Technik	[o]	**PF0160**	154,8×63,3×20	OK047	ATE		[-]	**PF0624**	123,1×48,3×17,3	
330xd	01/05→			ATE	- M-Technik	[o]	**PF0156**	154,8×63,3×20		ATE		[-]	**PF0624**	123,1×48,3×17,3	
330xd	01/05→			ATE	Ø Disc 248	[-]	**PF0581**	155,1×68,3×20,2		ATE		[o]	**PF0486**	123,1×59,2×17	
335xd	01/05→			ATE	- M-Technik	[o]	**PF0160**	154,8×63,3×20	OK047	ATE		[-]	**PF0624**	123,1×48,3×17,3	
335xd	01/05→			ATE	- M-Technik	[o]	**PF0156**	154,8×63,3×20		ATE		[-]	**PF0624**	123,1×48,3×17,3	
335xd	01/05→			ATE	Ø Disc 248	[-]	**PF0581**	155,1×68,3×20,2		ATE		[o]	**PF0486**	123,1×59,2×17	
3 Touring (E91)															
316d	09/05→	85	116	ATE	- M-Technik	[o]	**PF0160**	154,8×63,3×20	OK047	ATE		[-]	**PF0149**	123,1×43,8×17,3	
316d	09/05→	85	116	ATE	- M-Technik	[o]	**PF0156**	154,8×63,3×20		ATE		[-]	**PF0149**	123,1×43,8×17,3	
316i	09/05→	90	122	ATE	- M-Technik	[o]	**PF0160**	154,8×63,3×20	OK047	ATE		[-]	**PF0149**	123,1×43,8×17,3	
316i	09/05→	90	122	ATE	- M-Technik	[o]	**PF0156**	154,8×63,3×20		ATE		[-]	**PF0149**	123,1×43,8×17,3	
318i	09/05→	95	129	ATE	- M-Technik	[o]	**PF0160**	154,8×63,3×20	OK047	ATE		[-]	**PF0149**	123,1×43,8×17,3	
318i	09/05→	95	129	ATE	- M-Technik	[o]	**PF0156**	154,8×63,3×20		ATE		[-]	**PF0149**	123,1×43,8×17,3	

		KW	CV													
				SiS	i	W.i.	MAGNETI MARELLI	W×H×Th (mm)	Extra kit [Opt]	SiS	i	W.i.	MAGNETI MARELLI	W×H×Th (mm)	Extra kit [Opt]
BMW																
3 Touring (E91)																
318i	09/05 →	105	143	ATE	Ø Disc 248	[-]	**PF0150**	155,1×68,3×20,2		ATE		[-]	**PF0624**	123,1×48,3×17,3	
318i	01/05 →	105	143	ATE	Ø Disc 248	[-]	**PF0150**	155,1×68,3×20,2		ATE		[o]	**PF0486**	123,1×59,2×17	
318d	09/05 →	90	122	ATE	- M-Technik	[o]	**PF0160**	154,8×63,3×20	OK047	ATE		[-]	**PF0149**	123,1×43,8×17,3	
318d	09/05 →	90	122	ATE	- M-Technik	[o]	**PF0156**	154,8×63,3×20		ATE		[-]	**PF0149**	123,1×43,8×17,3	
318d	09/05 →	100	136	ATE	Ø Disc 248	[-]	**PF0150**	155,1×68,3×20,2		ATE		[-]	**PF0624**	123,1×48,3×17,3	
318d	09/05 →	105	143	ATE	Ø Disc 248	[-]	**PF0150**	155,1×68,3×20,2		ATE		[o]	**PF0486**	123,1×59,2×17	
320i	01/05 →			ATE	- M-Technik	[o]	**PF0160**	154,8×63,3×20	OK047	ATE		[-]	**PF0149**	123,1×43,8×17,3	
320i	01/05 →			ATE	- M-Technik	[o]	**PF0156**	154,8×63,3×20		ATE		[-]	**PF0149**	123,1×43,8×17,3	
320i	09/05 →	110	150	ATE	Ø Disc 248	[-]	**PF0150**	155,1×68,3×20,2		ATE		[-]	**PF0624**	123,1×48,3×17,3	
320i	09/05 →	125	170	ATE	Ø Disc 248	[-]	**PF0150**	155,1×68,3×20,2		ATE		[o]	**PF0486**	123,1×59,2×17	
320d	09/05 →	110	150	ATE	- M-Technik	[o]	**PF0160**	154,8×63,3×20	OK047	ATE		[-]	**PF0149**	123,1×43,8×17,3	
320d	09/05 →	110	150	ATE	- M-Technik	[o]	**PF0156**	154,8×63,3×20		ATE		[-]	**PF0149**	123,1×43,8×17,3	
320d	09/05 →	130	177	ATE	Ø Disc 248	[-]	**PF0150**	155,1×68,3×20,2		ATE		[-]	**PF0624**	123,1×48,3×17,3	
320d	09/05 →	135	184	ATE	Ø Disc 248	[-]	**PF0150**	155,1×68,3×20,2		ATE		[o]	**PF0486**	123,1×59,2×17	
320d xDrive	09/05 →	130	177	ATE	Ø Disc 248	[-]	**PF0150**	155,1×68,3×20,2		ATE		[o]	**PF0486**	123,1×59,2×17	
320d xDrive	09/05 →	135	184	ATE	Ø Disc 248	[-]	**PF0150**	155,1×68,3×20,2		ATE		[o]	**PF0486**	123,1×59,2×17	
320d xDrive	09/05 →	120	163	ATE	Ø Disc 248	[-]	**PF0150**	155,1×68,3×20,2		ATE		[o]	**PF0486**	123,1×59,2×17	
320xd	09/05 →	130	177	ATE	Ø Disc 248	[-]	**PF0150**	155,1×68,3×20,2		ATE		[o]	**PF0486**	123,1×59,2×17	
323i	09/05 →	130	177	ATE	Ø Disc 248	[-]	**PF0150**	155,1×68,3×20,2		ATE		[o]	**PF0486**	123,1×59,2×17	
325i	01/05 →			ATE	- M-Technik	[o]	**PF0160**	154,8×63,3×20	OK047	ATE		[-]	**PF0149**	123,1×43,8×17,3	
325i	01/05 →			ATE	- M-Technik	[o]	**PF0156**	154,8×63,3×20		ATE		[-]	**PF0149**	123,1×43,8×17,3	
325i	09/05 →	160	218	ATE	Ø Disc 248	[-]	**PF0150**	155,1×68,3×20,2		ATE		[-]	**PF0624**	123,1×48,3×17,3	
325i	09/05 →	160	218	ATE	Ø Disc 248	[-]	**PF0150**	155,1×68,3×20,2		ATE		[o]	**PF0486**	123,1×59,2×17	
325i xDrive	09/05 →	160	218	ATE	Ø Disc 248	[-]	**PF0150**	155,1×68,3×20,2		ATE		[o]	**PF0486**	123,1×59,2×17	
325xi	01/05 →			ATE	Ø Disc 248	[o]	**PF0160**	154,8×63,3×20	OK047	ATE		[-]	**PF0149**	123,1×43,8×17,3	
325xi	01/05 →			ATE	- M-Technik	[o]	**PF0156**	154,8×63,3×20		ATE		[-]	**PF0149**	123,1×43,8×17,3	
325xi	09/05 →	160	218	ATE	Ø Disc 248	[-]	**PF0150**	155,1×68,3×20,2		ATE		[-]	**PF0624**	123,1×48,3×17,3	
325xi	09/05 →	160	218	ATE	Ø Disc 248	[-]	**PF0150**	155,1×68,3×20,2		ATE		[o]	**PF0486**	123,1×59,2×17	
325d	01/05 →			ATE	- M-Technik	[o]	**PF0160**	154,8×63,3×20	OK047	ATE		[-]	**PF0149**	123,1×43,8×17,3	
325d	01/05 →			ATE	- M-Technik	[o]	**PF0156**	154,8×63,3×20		ATE		[-]	**PF0149**	123,1×43,8×17,3	
325d	09/05 →	145	197	ATE	Ø Disc 248	[-]	**PF0150**	155,1×68,3×20,2		ATE		[-]	**PF0624**	123,1×48,3×17,3	
325d	09/05 →	150	204	ATE	Ø Disc 248	[-]	**PF0150**	155,1×68,3×20,2		ATE		[o]	**PF0486**	123,1×59,2×17	
330i	01/05 →			ATE	- M-Technik	[o]	**PF0160**	154,8×63,3×20	OK047	ATE		[-]	**PF0149**	123,1×43,8×17,3	
330i	01/05 →			ATE	- M-Technik	[o]	**PF0156**	154,8×63,3×20		ATE		[-]	**PF0149**	123,1×43,8×17,3	
330i	09/05 →	190	258	ATE	Ø Disc 248	[-]	**PF0581**	155,1×68,3×20,2		ATE		[-]	**PF0624**	123,1×48,3×17,3	
330i	09/05 →	200	272	ATE	Ø Disc 248	[-]	**PF0150**	155,1×68,3×20,2		ATE		[o]	**PF0486**	123,1×59,2×17	
330i xDrive	09/05 →	200	272	ATE	Ø Disc 248	[-]	**PF0150**	155,1×68,3×20,2		ATE		[o]	**PF0486**	123,1×59,2×17	
330xi	01/05 →			ATE	- M-Technik	[o]	**PF0160**	154,8×63,3×20	OK047	ATE		[-]	**PF0149**	123,1×43,8×17,3	
330xi	01/05 →			ATE	- M-Technik	[o]	**PF0156**	154,8×63,3×20		ATE		[-]	**PF0149**	123,1×43,8×17,3	
330xi	09/05 →	190	258	ATE	Ø Disc 248	[-]	**PF0581**	155,1×68,3×20,2		ATE		[-]	**PF0624**	123,1×48,3×17,3	
330xi	09/05 →	200	272	ATE	Ø Disc 248	[-]	**PF0150**	155,1×68,3×20,2		ATE		[o]	**PF0486**	123,1×59,2×17	
330d	01/05 →			ATE	- M-Technik	[o]	**PF0160**	154,8×63,3×20	OK047	ATE		[-]	**PF0149**	123,1×43,8×17,3	
330d	01/05 →			ATE	- M-Technik	[o]	**PF0156**	154,8×63,3×20		ATE		[-]	**PF0149**	123,1×43,8×17,3	
330d	09/05 →	170	231	ATE	Ø Disc 248	[-]	**PF0581**	155,1×68,3×20,2		ATE		[-]	**PF0624**	123,1×48,3×17,3	

		KW	CV													
				SiS	i	W.i.	MAGNETI MARELLI	W×H×Th (mm)	Extra kit [Opt]	SiS	i	W.i.	MAGNETI MARELLI	W×H×Th (mm)	Extra kit [Opt]
BMW															
3 Touring (E91)															
330d	09/05→	180	245	ATE	Ø Disc 248	[-]	**PF0150**	155,1×68,3×20,2		ATE		[o]	**PF0486**	123,1×59,2×17	
330xd	01/05→			ATE	- M-Technik	[o]	**PF0160**	154,8×63,3×20	OK047	ATE		[-]	**PF0149**	123,1×43,8×17,3	
330xd	09/05→	170	231	ATE	Ø Disc 248	[-]	**PF0581**	155,1×68,3×20,2		ATE		[-]	**PF0624**	123,1×48,3×17,3	
330xd	09/05→	180	245	ATE	Ø Disc 248	[-]	**PF0150**	155,1×68,3×20,2		ATE		[o]	**PF0486**	123,1×59,2×17	
335i	01/05→			ATE	- M-Technik	[o]	**PF0160**	154,8×63,3×20	OK047	ATE		[-]	**PF0149**	123,1×43,8×17,3	
335i	01/05→			ATE	- M-Technik	[o]	**PF0156**	154,8×63,3×20		ATE		[-]	**PF0149**	123,1×43,8×17,3	
335i	01/05→			ATE	Ø Disc 248	[-]	**PF0581**	155,1×68,3×20,2		ATE		[-]	**PF0624**	123,1×48,3×17,3	
335i	09/05→	225	306	ATE	Ø Disc 248	[-]	**PF0150**	155,1×68,3×20,2		ATE		[o]	**PF0486**	123,1×59,2×17	
335d	01/05→			ATE	- M-Technik	[o]	**PF0160**	154,8×63,3×20	OK047	ATE		[-]	**PF0149**	123,1×43,8×17,3	
335d	01/05→			ATE	- M-Technik	[o]	**PF0156**	154,8×63,3×20		ATE		[-]	**PF0149**	123,1×43,8×17,3	
335d	01/05→			ATE	Ø Disc 248	[-]	**PF0581**	155,1×68,3×20,2		ATE		[-]	**PF0624**	123,1×48,3×17,3	
335d	09/05→	210	286	ATE	Ø Disc 248	[-]	**PF0150**	155,1×68,3×20,2		ATE		[o]	**PF0486**	123,1×59,2×17	
335i xDrive	09/05→	225	306	ATE	Ø Disc 248	[-]	**PF0150**	155,1×68,3×20,2		ATE		[o]	**PF0486**	123,1×59,2×17	
335xi	09/05→	225	306	ATE	Ø Disc 248	[-]	**PF0150**	155,1×68,3×20,2		ATE		[o]	**PF0486**	123,1×59,2×17	
3 Coupé (E92)															
320	09/06→			ATE		[o]	**PF0507**	154,8×63,3×20	OK047/ OK048	ATE		[-]	**PF0149**	123,1×43,8×17,3	
320	09/06→			ATE	- M-Technik	[o]	**PF0156**	154,8×63,3×20		ATE		[-]	**PF0149**	123,1×43,8×17,3	
320i	06/06→	125	170	ATE		[o]	**PF0507**	154,8×63,3×20	OK048	ATE		[-]	**PF0624**	123,1×48,3×17,3	
320i	06/06→	110	150	ATE	Ø Disc 248	[-]	**PF0150**	155,1×68,3×20,2		ATE		[o]	**PF0486**	123,1×59,2×17	
320d	09/06→			ATE		[o]	**PF0507**	154,8×63,3×20	OK047/ OK048	ATE		[-]	**PF0149**	123,1×43,8×17,3	
320d	09/06→			ATE	- M-Technik	[o]	**PF0156**	154,8×63,3×20		ATE		[-]	**PF0149**	123,1×43,8×17,3	
320d	06/06→	130	177	ATE		[-]	**PF0150**	155,1×68,3×20,2		ATE		[-]	**PF0624**	123,1×48,3×17,3	
320d	06/06→	135	184	ATE	Ø Disc 248	[-]	**PF0150**	155,1×68,3×20,2		ATE		[o]	**PF0486**	123,1×59,2×17	
320d xDrive	06/06→	130	177	ATE	Ø Disc 248	[-]	**PF0150**	155,1×68,3×20,2		ATE		[o]	**PF0486**	123,1×59,2×17	
320d xDrive	06/06→	135	184	ATE	Ø Disc 248	[-]	**PF0150**	155,1×68,3×20,2		ATE		[o]	**PF0486**	123,1×59,2×17	
323i	06/06→	130	177	ATE	Ø Disc 248	[-]	**PF0150**	155,1×68,3×20,2		ATE		[o]	**PF0486**	123,1×59,2×17	
325i	09/06→			ATE		[o]	**PF0507**	154,8×63,3×20	OK047/ OK048	ATE		[-]	**PF0149**	123,1×43,8×17,3	
325i	09/06→			ATE	- M-Technik	[o]	**PF0156**	154,8×63,3×20		ATE		[-]	**PF0149**	123,1×43,8×17,3	
325i	06/06→	160	218	ATE		[-]	**PF0150**	155,1×68,3×20,2		ATE		[-]	**PF0624**	123,1×48,3×17,3	
325i	06/06→	160	218	ATE	Ø Disc 248	[-]	**PF0150**	155,1×68,3×20,2		ATE		[o]	**PF0486**	123,1×59,2×17	
325d	09/06→			ATE		[o]	**PF0507**	154,8×63,3×20	OK047/ OK048	ATE		[-]	**PF0149**	123,1×43,8×17,3	
325d	09/06→			ATE	- M-Technik	[o]	**PF0156**	154,8×63,3×20		ATE		[-]	**PF0149**	123,1×43,8×17,3	
325d	06/06→	145	197	ATE		[-]	**PF0150**	155,1×68,3×20,2		ATE		[-]	**PF0624**	123,1×48,3×17,3	
325d	06/06→	150	204	ATE	Ø Disc 248	[-]	**PF0150**	155,1×68,3×20,2		ATE		[o]	**PF0486**	123,1×59,2×17	
325xi	09/06→			ATE		[o]	**PF0507**	154,8×63,3×20	OK047/ OK048	ATE		[-]	**PF0149**	123,1×43,8×17,3	
325xi	09/06→			ATE	- M-Technik	[o]	**PF0156**	154,8×63,3×20		ATE		[-]	**PF0149**	123,1×43,8×17,3	
325xi	06/06→	160	218	ATE		[-]	**PF0150**	155,1×68,3×20,2		ATE		[-]	**PF0624**	123,1×48,3×17,3	
325xi	06/06→	160	218	ATE	Ø Disc 248	[-]	**PF0150**	155,1×68,3×20,2		ATE		[o]	**PF0486**	123,1×59,2×17	
325i xDrive	06/06→	160	218	ATE	Ø Disc 248	[-]	**PF0150**	155,1×68,3×20,2		ATE		[o]	**PF0486**	123,1×59,2×17	

		KW	CV	SiS	i	W.i.	MAGNETI MARELLI	W×H×Th (mm)	Extra kit [Opt]	SiS	i	W.i.	MAGNETI MARELLI	W×H×Th (mm)	Extra kit [Opt]
BMW															
3 Coupé (E92)															
328i	06/06 →	187	254	ATE	Ø Disc 248	[-]	**PF0150**	155,1×68,3×20,2		ATE		[o]	**PF0486**	123,1×59,2×17	
330i	09/06 →			ATE		[o]	**PF0507**	154,8×63,3×20	OK047/ OK048	ATE		[-]	**PF0149**	123,1×43,8×17,3	
330i	09/06 →			ATE	- M-Technik	[o]	**PF0156**	154,8×63,3×20		ATE		[-]	**PF0149**	123,1×43,8×17,3	
330i	06/06 →	200	272	ATE		[-]	**PF0581**	155,1×68,3×20,2		ATE		[-]	**PF0624**	123,1×48,3×17,3	
330i	06/06 →	190	258	ATE	Ø Disc 248	[-]	**PF0150**	155,1×68,3×20,2		ATE		[o]	**PF0486**	123,1×59,2×17	
330i xDrive	06/06 →	200	272	ATE	Ø Disc 248	[-]	**PF0150**	155,1×68,3×20,2		ATE		[o]	**PF0486**	123,1×59,2×17	
330d	09/06 →			ATE		[o]	**PF0507**	154,8×63,3×20	OK047/ OK048	ATE		[-]	**PF0149**	123,1×43,8×17,3	
330d	09/06 →			ATE	- M-Technik	[o]	**PF0156**	154,8×63,3×20		ATE		[-]	**PF0149**	123,1×43,8×17,3	
330d	06/06 →	170	231	ATE		[-]	**PF0581**	155,1×68,3×20,2		ATE		[-]	**PF0624**	123,1×48,3×17,3	
330d	06/06 →	180	245	ATE	Ø Disc 248	[-]	**PF0150**	155,1×68,3×20,2		ATE		[o]	**PF0486**	123,1×59,2×17	
330xi	09/06 →			ATE		[o]	**PF0507**	154,8×63,3×20	OK047/ OK048	ATE		[-]	**PF0149**	123,1×43,8×17,3	
330xi	09/06 →			ATE	- M-Technik	[o]	**PF0156**	154,8×63,3×20		ATE		[-]	**PF0149**	123,1×43,8×17,3	
330xi	06/06 →	200	272	ATE		[-]	**PF0581**	155,1×68,3×20,2		ATE		[-]	**PF0624**	123,1×48,3×17,3	
330xi	06/06 →	190	258	ATE	Ø Disc 248	[-]	**PF0150**	155,1×68,3×20,2		ATE		[o]	**PF0486**	123,1×59,2×17	
330xd	09/06 →			ATE		[o]	**PF0507**	154,8×63,3×20	OK047/ OK048	ATE		[-]	**PF0149**	123,1×43,8×17,3	
330xd	09/06 →			ATE	- M-Technik	[o]	**PF0156**	154,8×63,3×20		ATE		[-]	**PF0149**	123,1×43,8×17,3	
330xd	06/06 →	170	231	ATE		[-]	**PF0581**	155,1×68,3×20,2		ATE		[-]	**PF0624**	123,1×48,3×17,3	
330xd	06/06 →	180	245	ATE	Ø Disc 248	[-]	**PF0150**	155,1×68,3×20,2		ATE		[o]	**PF0486**	123,1×59,2×17	
330d xDrive	06/06 →	180	245	ATE	Ø Disc 248	[-]	**PF0150**	155,1×68,3×20,2		ATE		[o]	**PF0486**	123,1×59,2×17	
335i	06/06 →	225	306	ATE	Ø Disc 248	[-]	**PF0150**	155,1×68,3×20,2		ATE		[o]	**PF0486**	123,1×59,2×17	
335d	09/06 →			ATE		[o]	**PF0507**	154,8×63,3×20	OK047/ OK048	ATE		[-]	**PF0149**	123,1×43,8×17,3	
335d	09/06 →			ATE	- M-Technik	[o]	**PF0156**	154,8×63,3×20		ATE		[-]	**PF0149**	123,1×43,8×17,3	
335d	06/06 →	210	286	ATE		[-]	**PF0581**	155,1×68,3×20,2		ATE		[-]	**PF0624**	123,1×48,3×17,3	
335d	06/06 →	210	286	ATE	Ø Disc 248	[-]	**PF0150**	155,1×68,3×20,2		ATE		[o]	**PF0486**	123,1×59,2×17	
335i xDrive	06/06 →	225	306	ATE		[-]	**PF0150**	155,1×68,3×20,2		ATE		[-]	**PF0624**	123,1×48,3×17,3	
335xi	06/06 →	225	306	ATE	Ø Disc 248	[-]	**PF0150**	155,1×68,3×20,2		ATE		[o]	**PF0486**	123,1×59,2×17	
3 Cabriolet (E93)															
320i	03/07 → 14			ATE		[o]	**PF0160**	154,8×63,3×20	OK047	ATE		[-]	**PF0149**	123,1×43,8×17,3	
320i	03/07 → 14			ATE	- M-Technik	[o]	**PF0156**	154,8×63,3×20		ATE		[-]	**PF0149**	123,1×43,8×17,3	
320i	03/07 → 14			ATE	Ø Disc 248	[-]	**PF0583**	155,1×68,3×20,2		ATE		[-]	**PF0624**	123,1×48,3×17,3	
320i	03/07 → 14			ATE	Ø Disc 248	[-]	**PF0583**	155,1×68,3×20,2		ATE		[o]	**PF0486**	123,1×59,2×17	
325i	03/07 → 14			ATE		[o]	**PF0160**	154,8×63,3×20	OK047	ATE		[-]	**PF0149**	123,1×43,8×17,3	
325i	03/07 → 14			ATE	- M-Technik	[o]	**PF0156**	154,8×63,3×20		ATE		[-]	**PF0149**	123,1×43,8×17,3	
325i	03/07 → 14			ATE	Ø Disc 248	[-]	**PF0583**	155,1×68,3×20,2		ATE		[-]	**PF0624**	123,1×48,3×17,3	
325i	03/07 → 14			ATE	Ø Disc 248	[-]	**PF0583**	155,1×68,3×20,2		ATE		[o]	**PF0486**	123,1×59,2×17	
330i	03/07 → 14			ATE		[o]	**PF0160**	154,8×63,3×20	OK047	ATE		[-]	**PF0149**	123,1×43,8×17,3	
330i	03/07 → 14			ATE	- M-Technik	[o]	**PF0156**	154,8×63,3×20		ATE		[-]	**PF0149**	123,1×43,8×17,3	
330i	03/07 → 14			ATE		[-]	**PF0581**	155,1×68,3×20,2		ATE		[-]	**PF0624**	123,1×48,3×17,3	
330i	03/07 → 14			ATE	Ø Disc 248	[-]	**PF0583**	155,1×68,3×20,2		ATE		[o]	**PF0486**	123,1×59,2×17	

		KW	CV	SiS	i	W.i.	MAGNETI MARELLI	W×H×Th (mm)	Extra kit [Opt]	SiS	i	W.i.	MAGNETI MARELLI	W×H×Th (mm)	Extra kit [Opt]
BMW															
3 Cabriolet (E93)															
330cd	03/07 → 14			ATE		[o]	**PF0160**	154,8×63,3×20	OK047	ATE		[-]	**PF0149**	123,1×43,8×17,3	
330cd	03/07 → 14			ATE	- M-Technik	[o]	**PF0156**	154,8×63,3×20		ATE		[-]	**PF0149**	123,1×43,8×17,3	
330cd	03/07 → 14			ATE		[-]	**PF0581**	155,1×68,3×20,2		ATE		[-]	**PF0624**	123,1×48,3×17,3	
330cd	03/07 → 14			ATE	Ø Disc 248	[-]	**PF0583**	155,1×68,3×20,2		ATE		[o]	**PF0486**	123,1×59,2×17	
335i	03/07 → 14			ATE		[o]	**PF0160**	154,8×63,3×20	OK047	ATE		[-]	**PF0149**	123,1×43,8×17,3	
335i	03/07 → 14			ATE	- M-Technik	[o]	**PF0156**	154,8×63,3×20		ATE		[-]	**PF0149**	123,1×43,8×17,3	
335i	03/07 → 14			ATE		[-]	**PF0581**	155,1×68,3×20,2		ATE		[-]	**PF0624**	123,1×48,3×17,3	
335i	03/07 → 14			ATE	Ø Disc 248	[-]	**PF0583**	155,1×68,3×20,2		ATE		[o]	**PF0486**	123,1×59,2×17	
5 (E34)															
523 24V / Touring	96 →			ATE		[o]	**PF0159**	156,3×63,3×20							
525 TD	96 →			ATE		[o]	**PF0159**	156,3×63,3×20							
525 TDS	96 →			ATE		[o]	**PF0159**	156,3×63,3×20							
528 24V / Touring	96 →			ATE		[o]	**PF0159**	156,3×63,3×20							
530 D	98 →			ATE		[o]	**PF0159**	156,3×63,3×20							
535i	96 →			ATE		[o]	**PF0159**	156,3×63,3×20		ATE		[o]	**PF0158**	121,9×45×17,3	
5 (E39)															
520 d	02/00 → 06/03	100	136	ATE		[o]	**PF0159**	156,3×63,3×20		ATE		[o]	**PF0158**	121,9×45×17,3	
520 i	01/96 → 09/00	110	150	ATE		[o]	**PF0159**	156,3×63,3×20		ATE		[o]	**PF0158**	121,9×45×17,3	
520 i	04/99 → 06/03	100	136	ATE		[o]	**PF0159**	156,3×63,3×20		ATE		[o]	**PF0158**	121,9×45×17,3	
520 i	09/00 → 06/03	125	170	ATE		[o]	**PF0159**	156,3×63,3×20		ATE		[o]	**PF0158**	121,9×45×17,3	
523 i	11/95 → 09/00	125	170	ATE		[o]	**PF0159**	156,3×63,3×20		ATE		[o]	**PF0158**	121,9×45×17,3	
525 d	02/00 → 06/03	120	163	ATE		[o]	**PF0159**	156,3×63,3×20		ATE		[o]	**PF0158**	121,9×45×17,3	
525 i	09/00 → 06/03	141	192	ATE		[o]	**PF0159**	156,3×63,3×20		ATE		[o]	**PF0158**	121,9×45×17,3	
525 TD	01/97 → 06/03	85	116	ATE		[o]	**PF0159**	156,3×63,3×20		ATE		[o]	**PF0158**	121,9×45×17,3	
525 TDs	01/96 → 06/03	105	143	ATE		[o]	**PF0159**	156,3×63,3×20		ATE		[o]	**PF0158**	121,9×45×17,3	
528 i	11/95 → 09/00	142	193	ATE		[o]	**PF0159**	156,3×63,3×20		ATE		[o]	**PF0158**	121,9×45×17,3	
530 d	08/98 → 09/00	135	184	ATE		[o]	**PF0159**	156,3×63,3×20		ATE		[o]	**PF0158**	121,9×45×17,3	
530 d	09/00 → 06/03	142	193	ATE		[o]	**PF0159**	156,3×63,3×20		ATE		[o]	**PF0158**	121,9×45×17,3	
530 i	09/00 → 06/03	170	231	ATE		[o]	**PF0159**	156,3×63,3×20		ATE		[o]	**PF0158**	121,9×45×17,3	
535 i	04/96 → 03/99	173	235	ATE		[o]	**PF0159**	156,3×63,3×20		ATE		[o]	**PF0158**	121,9×45×17,3	
535 i	04/99 → 06/03	180	245	ATE		[o]	**PF0579**	156,5×73,2×19,3		ATE		[o]	**PF0158**	121,9×45×17,3	
540 i	04/96 → 06/03	210	286	ATE		[o]	**PF0579**	156,5×73,2×19,3		ATE		[o]	**PF0158**	121,9×45×17,3	
M5	10/98 → 06/03	294	400	ATE		[o]	**PF0579**	156,5×73,2×19,3		ATE		[o]	**PF0158**	121,9×45×17,3	
M5	09/98 → 06/03	230	313	ATE		[o]	**PF0579**	156,5×73,2×19,3		ATE		[o]	**PF0158**	121,9×45×17,3	
5 (E60-E61)															
520i Berlina	10/03 →			ATE		[o]	**PF0160**	154,8×63,3×20	OK047	ATE		[o]	**PF0161**	122×58,2×17	
525 D	10/03 →			ATE		[o]	**PF0160**	154,8×63,3×20	OK047	ATE		[o]	**PF0161**	122×58,2×17	
525i	07/03 →			ATE		[o]	**PF0160**	154,8×63,3×20	OK047	ATE		[o]	**PF0161**	122×58,2×17	
525i Touring	05/04 →			ATE	Ø Disc 248	[-]	**PF0151**	155,1×68,3×20,2		ATE	Ø Disc 248	[o]	**PF0161**	122×58,2×17	
525d Touring	05/04 →			ATE	Ø Disc 248	[-]	**PF0151**	155,1×68,3×20,2		ATE	Ø Disc 248	[o]	**PF0161**	122×58,2×17	
530i	10/03 →			ATE		[o]	**PF0160**	154,8×63,3×20	OK047	ATE		[o]	**PF0161**	122×58,2×17	
530 D	10/03 →			ATE	Ø Disc 248	[-]	**PF0151**	155,1×68,3×20,2		ATE	Ø Disc 248	[o]	**PF0161**	122×58,2×17	

		KW	CV	SiS	i	W.i.	MAGNETI MARELLI	W×H×Th (mm)	Extra kit [Opt]	SiS	i	W.i.	MAGNETI MARELLI	W×H×Th (mm)	Extra kit [Opt]
BMW															
5 (E60-E61)															
530 D Touring	05/04 →			ATE	Ø Disc 248	[-]	**PF0151**	155,1×68,3×20,2		ATE	Ø Disc 248	[o]	**PF0161**	122×58,2×17	
535 D	09/04 →									ATE	Ø Disc 345	[o]	**PF0737**	139,7×68×16,8	
535 D Touring	09/04 →									ATE	Ø Disc 345	[o]	**PF0737**	139,7×68×16,8	
545i Berlina	10/03 →			ATE	Ø Disc 248	[-]	**PF0151**	155,1×68,3×20,2		ATE	Ø Disc 345	[o]	**PF0737**	139,7×68×16,8	
545i Touring	05/04 →			ATE	Ø Disc 248	[-]	**PF0151**	155,1×68,3×20,2		ATE	Ø Disc 345	[o]	**PF0737**	139,7×68×16,8	
550i	07/05 →									ATE	Ø Disc 345	[o]	**PF0737**	139,7×68×16,8	
550i Touring	07/05 →									ATE	Ø Disc 345	[o]	**PF0737**	139,7×68×16,8	
M5	09/04 →									ATE	Ø Disc 345	[o]	**PF0737**	139,7×68×16,8	
M5 Touring	09/04 →									ATE	Ø Disc 345	[o]	**PF0737**	139,7×68×16,8	
5 Gran Turismo (F07)															
530d	10/09 →	155	211	ATE	Ø Disc 248	[-]	**PF0582**	154,2×68,3×20,2		ATE		[-]	**PF0738**	139,7×68×16,8	
530d	10/09 →	180	245	ATE	Ø Disc 248	[-]	**PF0582**	154,2×68,3×20,2		ATE		[-]	**PF0738**	139,7×68×16,8	
530d xDrive	10/09 →	180	245	ATE	Ø Disc 248	[-]	**PF0582**	154,2×68,3×20,2		ATE		[-]	**PF0738**	139,7×68×16,8	
535d	09/10 →	220	299							ATE		[-]	**PF0738**	139,7×68×16,8	
535d xDrive	09/10 →	220	299							ATE		[-]	**PF0738**	139,7×68×16,8	
535i	10/09 →	225	306							ATE		[-]	**PF0738**	139,7×68×16,8	
535i xDrive	09/10 →	225	306							ATE		[-]	**PF0738**	139,7×68×16,8	
550i	10/09 →	300	408							ATE		[-]	**PF0738**	139,7×68×16,8	
550i xDrive	09/10 →	300	408							ATE		[-]	**PF0738**	139,7×68×16,8	
5 (F10)															
520 D	03/10 →			ATE		[o]	**PF0508**	154,8×63,3×20							
523i	03/10 →			ATE		[o]	**PF0508**	154,8×63,3×20							
525 D	03/10 →			ATE		[o]	**PF0508**	154,8×63,3×20							
525d	03/10 →	150	204	ATE	Ø Disc 248	[-]	**PF0582**	154,2×68,3×20,2							
528i	03/10 →			ATE		[o]	**PF0508**	154,8×63,3×20							
528i	03/10 →	190	258	ATE	Ø Disc 248	[-]	**PF0582**	154,2×68,3×20,2							
530 D	03/10 →			ATE		[o]	**PF0508**	154,8×63,3×20							
530d	03/10 →	180	245	ATE	Ø Disc 248	[-]	**PF0582**	154,2×68,3×20,2							
535i	03/10 →			ATE		[o]	**PF0508**	154,8×63,3×20							
535i	03/10 →	225	306	ATE	Ø Disc 248	[-]	**PF0582**	154,2×68,3×20,2							
550i	03/10 →			ATE		[o]	**PF0508**	154,8×63,3×20							
5 Touring (F11)															
520 D	03/10 →			ATE		[o]	**PF0508**	154,8×63,3×20		ATE	Ø Disc 345	[-]	**PF0738**	139,7×68×16,8	
520d	09/10 →	135	184	ATE	Ø Disc 248	[-]	**PF0582**	154,2×68,3×20,2							
523i	03/10 →			ATE		[o]	**PF0508**	154,8×63,3×20		ATE	Ø Disc 345	[-]	**PF0738**	139,7×68×16,8	
523i	09/10 →	150	204	ATE	Ø Disc 248	[-]	**PF0582**	154,2×68,3×20,2							
525 D	03/10 →			ATE		[o]	**PF0508**	154,8×63,3×20		ATE	Ø Disc 345	[-]	**PF0738**	139,7×68×16,8	
525d	09/10 →	150	204	ATE	Ø Disc 248	[-]	**PF0582**	154,2×68,3×20,2							
528i	03/10 →			ATE		[o]	**PF0508**	154,8×63,3×20		ATE	Ø Disc 345	[-]	**PF0738**	139,7×68×16,8	
528i	09/10 →	190	258	ATE	Ø Disc 248	[-]	**PF0582**	154,2×68,3×20,2							
530 D	03/10 →			ATE		[o]	**PF0508**	154,8×63,3×20		ATE	Ø Disc 345	[-]	**PF0738**	139,7×68×16,8	
530d	09/10 →	180	245	ATE	Ø Disc 248	[-]	**PF0582**	154,2×68,3×20,2							
535d	09/10 →	220	299	ATE	Ø Disc 248	[-]	**PF0582**	154,2×68,3×20,2							
535i	09/10 →	225	306	ATE	Ø Disc 248	[-]	**PF0582**	154,2×68,3×20,2							

		KW	CV														
				SiS	i	W.i.	MAGNETI MARELLI	W×H×Th (mm)	Extra kit [Opt]	SiS	i	W.i.	MAGNETI MARELLI	W×H×Th (mm)	Extra kit [Opt]
BMW															
6 (E63-E64)															
635 D	07/07 →									ATE	Ø Disc 345	[o]	**PF0737**	139,7×68×16,8	
645 Ci	12/03 →			ATE	Ø Disc 248	[-]	**PF0151**	155,1×68,3×20,2		ATE	Ø Disc 345	[o]	**PF0737**	139,7×68×16,8	
650i	07/05 →									ATE	Ø Disc 345	[o]	**PF0737**	139,7×68×16,8	
M6	09/05 →									ATE	Ø Disc 345	[o]	**PF0737**	139,7×68×16,8	
6 Cabriolet (E64)															
630i	09/04 →	190	258							ATE	Ø Disc 345	[o]	**PF0737**	139,7×68×16,8	
630i	07/07 →	200	272							ATE	Ø Disc 345	[o]	**PF0737**	139,7×68×16,8	
635d	07/07 →	210	286							ATE	Ø Disc 345	[o]	**PF0737**	139,7×68×16,8	
645Ci	04/04 →	245	333							ATE	Ø Disc 345	[o]	**PF0737**	139,7×68×16,8	
650i	07/05 →	270	367							ATE	Ø Disc 345	[o]	**PF0737**	139,7×68×16,8	
M6	07/06 →	373	507							ATE	Ø Disc 345	[o]	**PF0737**	139,7×68×16,8	
6 Cabriolet (F12)															
640i	03/11 →	235	320	ATE	Ø Disc 248	[-]	**PF0582**	154,2×68,3×20,2							
650i	03/11 →	235	320	ATE	Ø Disc 248	[-]	**PF0582**	154,2×68,3×20,2							
650i xDrive	03/11 →	235	320	ATE	Ø Disc 248	[-]	**PF0582**	154,2×68,3×20,2							
6 Coupé (F13)															
640i	06/11 →	235	320	ATE	Ø Disc 248	[-]	**PF0582**	154,2×68,3×20,2							
650i	06/11 →	235	320	ATE	Ø Disc 248	[-]	**PF0582**	154,2×68,3×20,2							
7 (E38)															
725 tds	04/96 → 11/01	105	143							ATE		[o]	**PF0152**	123,1×59,2×17	
728 i,iL	08/95 → 11/01	142	193							ATE		[o]	**PF0152**	123,1×59,2×17	
728i X	11/95 → 09/01	142	193							ATE		[o]	**PF0152**	123,1×59,2×17	
730 d	08/98 → 04/00	135	184							ATE		[o]	**PF0152**	123,1×59,2×17	
730 d	04/00 → 11/01	142	193							ATE		[o]	**PF0152**	123,1×59,2×17	
735	95 →									ATE		[o]	**PF0152**	123,1×59,2×17	
740 i,iL	01/96 → 11/01	210	286	ATE		[o]	**PF0579**	156,5×73,2×19,3		ATE		[o]	**PF0485**	123,1×59,2×17	
740 i,iL	10/94 → 11/01	210	286	ATE		[o]	**PF0579**	156,5×73,2×19,3		ATE		[o]	**PF0485**	123,1×59,2×17	
740 D	94 →			ATE		[o]	**PF0579**	156,5×73,2×19,3		ATE		[o]	**PF0485**	123,1×59,2×17	
740 3.9 D	02/99 →									ATE		[o]	**PF0152**	123,1×59,2×17	
750 i,iL	12/94 → 11/01	240	326							ATE		[o]	**PF0485**	123,1×59,2×17	
7 (E65-E66)															
730 D	10/02 →			ATE	Ø Disc 248	[-]	**PF0151**	155,1×68,3×20,2							
730 D	10/02 →			ATE	Ø Disc 248	[-]	**PF0151**	155,1×68,3×20,2							
735i	03/05 →			ATE	Ø Disc 248	[-]	**PF0151**	155,1×68,3×20,2							
735	11/01 →			ATE	Ø Disc 248	[-]	**PF0151**	155,1×68,3×20,2							
740 D	10/02 →			ATE	Ø Disc 248	[-]	**PF0151**	155,1×68,3×20,2							
740 D	10/02 →			ATE	Ø Disc 248	[-]	**PF0151**	155,1×68,3×20,2		ATE	Ø Disc 345	[o]	**PF0737**	139,7×68×16,8	
745i	10/02 →			ATE	Ø Disc 248	[-]	**PF0151**	155,1×68,3×20,2		ATE	Ø Disc 345	[o]	**PF0737**	139,7×68×16,8	
745 i,Li	11/01 →	245	333	ATE	Ø Disc 248	[-]	**PF0151**	155,1×68,3×20,2		ATE	Ø Disc 345	[o]	**PF0737**	139,7×68×16,8	
745 D	01/03 →									ATE	Ø Disc 345	[o]	**PF0737**	139,7×68×16,8	
745 D	07/05 →									ATE	Ø Disc 345	[o]	**PF0737**	139,7×68×16,8	
750 i,Li	07/05 →	270	367							ATE	Ø Disc 345	[o]	**PF0737**	139,7×68×16,8	
760i	03/05 →									ATE	Ø Disc 345	[o]	**PF0737**	139,7×68×16,8	
760	02/03 → 08/05	320	435							ATE	Ø Disc 345	[o]	**PF0737**	139,7×68×16,8	

		KW	CV													
				SiS	i	W.i.	MAGNETI MARELLI	W×H×Th (mm)	Extra kit [Opt]	SiS	i	W.i.	MAGNETI MARELLI	W×H×Th (mm)	Extra kit [Opt]
BMW																
7 (E65-E66)																
760 i,Li	01/03 →	327	445							ATE	Ø Disc 345	[o]	**PF0737**	139,7×68×16,8	
7 (F01, F02, F03, F04)																
730d	10/08 →	180	245	ATE		[-]	**PF0582**	154,2×68,3×20,2		ATE		[-]	**PF0738**	139,7×68×16,8	
730i	06/08 →	190	258	ATE		[-]	**PF0582**	154,2×68,3×20,2		ATE		[-]	**PF0738**	139,7×68×16,8	
740d	09/09 →	225	306							ATE		[-]	**PF0738**	139,7×68×16,8	
740d xDrive	09/09 →	225	306							ATE		[-]	**PF0738**	139,7×68×16,8	
740i	09/09 →	240	326							ATE		[-]	**PF0738**	139,7×68×16,8	
750i	09/09 →	300	408							ATE		[-]	**PF0738**	139,7×68×16,8	
750i xDrive	09/09 →	300	408							ATE		[-]	**PF0738**	139,7×68×16,8	
760i	09/09 →	400	544							ATE		[-]	**PF0738**	139,7×68×16,8	
ActiveHybrid	10/10 →	342	465							ATE		[-]	**PF0738**	139,7×68×16,8	
ActiveHybrid	10/10 →	330	449							ATE		[-]	**PF0738**	139,7×68×16,8	
8 (E31)																
840 Ci	01/96 → 12/99	210	286							ATE		[o]	**PF0485**	123,1×59,2×17	
840 i	02/93 → 02/96	210	286							ATE		[o]	**PF0485**	123,1×59,2×17	
850 Ci	09/94 → 12/99	240	326							ATE		[o]	**PF0485**	123,1×59,2×17	
850 CSi	04/93 → 12/96	280	380							ATE		[o]	**PF0485**	123,1×59,2×17	
850 i,Ci	04/90 → 10/94	220	300							ATE		[o]	**PF0485**	123,1×59,2×17	
M3 II Cabriolet																
3.2 24V	01/01 → 12/06	235	315	ATE		[o]	**PF0153**	156,3×63,3×20								
M3 II Coupé																
3.0 24V	01/95 → 12/95	179	240	ATE		[o]	**PF0153**	156,3×63,3×20								
3.2 24V	01/01 → 12/06	235	315	ATE		[o]	**PF0153**	156,3×63,3×20								
M5																
3.6 24V	01/91 → 12/93	231	310							ATE		[o]	**PF0485**	123,1×59,2×17	
5.0 32V	01/00 → 12/03	294	394	ATE		[o]	**PF0579**	156,5×73,2×19,3		ATE		[o]	**PF0152**	123,1×59,2×17	
5.0 40V	01/06 → 12/07	373	500	ATE		[o]	**PF0579**	156,5×73,2×19,3		ATE		[o]	**PF0152**	123,1×59,2×17	
M5 Cabriolet																
5.0 40V	01/07 → 12/10	373	500	ATE		[o]	**PF0579**	156,5×73,2×19,3		ATE		[o]	**PF0152**	123,1×59,2×17	
Z3 (E36)																
2.0i	97 →			ATE		[-]	**PF0155**	150,2×57,8×17,8	OK019	ATE		[-]	**PF0154**	123×45×17	
2.2	08/00 → 01/03	125	170	ATE		[-]	**PF0155**	150,2×57,8×17,8	OK019	ATE		[-]	**PF0154**	123×45×17	
2.8	04/97 → 06/00	141	192	ATE		[-]	**PF0155**	150,2×57,8×17,8	OK019	ATE		[-]	**PF0154**	123×45×17	
Z3 Coupé (E36)																
2.8	07/97 → 06/00	141	192	ATE		[-]	**PF0155**	150,2×57,8×17,8	OK019	ATE		[-]	**PF0154**	123×45×17	
3.0	06/00 → 06/03	170	231	ATE		[-]	**PF0155**	150,2×57,8×17,8	OK019	ATE		[-]	**PF0154**	123×45×17	
M 3.2	02/98 → 06/01	236	321	ATE		[-]	**PF0155**	150,2×57,8×17,8	OK019	ATE		[-]	**PF0154**	123×45×17	
M 3.2	06/01 → 06/03	239	325	ATE		[-]	**PF0155**	150,2×57,8×17,8	OK019	ATE		[-]	**PF0154**	123×45×17	
Z4 (E85)																
2.0 i	04/05 →	110	150	ATE		[-]	**PF0155**	150,2×57,8×17,8	OK019	ATE		[o]	**PF0157**	123,1×43,7×17,3	OK022
2.2 i	10/03 →	125	170	ATE		[-]	**PF0155**	150,2×57,8×17,8	OK019	ATE		[o]	**PF0157**	123,1×43,7×17,3	OK022
2.5 i	02/03 →	141	192	ATE		[-]	**PF0155**	150,2×57,8×17,8	OK019	ATE		[o]	**PF0157**	123,1×43,7×17,3	OK022
2.5 i	01/06 →	130	177	ATE		[-]	**PF0155**	150,2×57,8×17,8	OK019	ATE		[o]	**PF0157**	123,1×43,7×17,3	OK022
2.5 si	01/06 →	160	218	ATE		[-]	**PF0155**	150,2×57,8×17,8	OK019	ATE		[o]	**PF0157**	123,1×43,7×17,3	OK022

		KW	CV												
				SiS	i	W.i.	MAGNETI MARELLI	W×H×Th (mm)	Extra kit [Opt]	SiS	i	W.i.	MAGNETI MARELLI	W×H×Th (mm)	Extra kit [Opt]
BMW															
Z4 (E85)															
3.0 i	02/03→	170	231	ATE		[-]	**PF0155**	150,2×57,8×17,8	OK019	ATE		[o]	**PF0157**	123,1×43,7×17,3	OK022
3.0 si	01/06→	195	265	ATE		[-]	**PF0155**	150,2×57,8×17,8	OK019	ATE		[o]	**PF0157**	123,1×43,7×17,3	OK022
3.2 M	03/06→	252	343	ATE		[-]	**PF0155**	150,2×57,8×17,8	OK019	ATE		[o]	**PF0157**	123,1×43,7×17,3	OK022
Z4 Coupé (E86)															
3.0 si	03/06→	195	265	ATE		[-]	**PF0155**	150,2×57,8×17,8	OK019	ATE		[o]	**PF0157**	123,1×43,7×17,3	OK022
3.2 M	03/06→	252	343	ATE		[-]	**PF0155**	150,2×57,8×17,8	OK019	ATE		[o]	**PF0157**	123,1×43,7×17,3	OK022
Z4 (E89)															
sDrive23i	05/09→	150	204	ATE		[o]	**PF0160**	154,8×63,3×20							
sDrive30i	05/09→			ATE		[o]	**PF0160**	154,8×63,3×20							
sDrive30i	05/09→	190	258	ATE	Ø Disc 248	[-]	**PF0583**	155,1×68,3×20,2							
sDrive35i	05/09→			ATE		[o]	**PF0160**	154,8×63,3×20							
sDrive35i	05/09→	225	306	ATE	Ø Disc 248	[-]	**PF0583**	155,1×68,3×20,2							
sDrive35is	05/09→	250	340	ATE	Ø Disc 248	[-]	**PF0583**	155,1×68,3×20,2							
Z8 (E52)															
4.9	98→04									ATE		[o]	**PF0152**	123,1×59,2×17	
4.9	06/00→06/03	294	400	ATE		[o]	**PF0579**	156,5×73,2×19,3		ATE		[o]	**PF0152**	123,1×59,2×17	
X1 (E84)															
sDrive18d	10/09→	105	143	ATE		[-]	**PF0581**	155,1×68,3×20,2		ATE	Ø Disc 248	[-]	**PF0624**	123,1×48,3×17,3	
sDrive18d	03/09→	100	136	ATE		[-]	**PF0581**	155,1×68,3×20,2		ATE	Ø Disc 248	[-]	**PF0624**	123,1×48,3×17,3	
sDrive18i	01/10→	110	150	ATE		[-]	**PF0581**	155,1×68,3×20,2		ATE	Ø Disc 248	[-]	**PF0624**	123,1×48,3×17,3	
sDrive20d	10/09→	130	177	ATE		[-]	**PF0581**	155,1×68,3×20,2		ATE	Ø Disc 248	[-]	**PF0624**	123,1×48,3×17,3	
sDrive20d	03/10→	120	163	ATE		[-]	**PF0581**	155,1×68,3×20,2		ATE	Ø Disc 248	[-]	**PF0624**	123,1×48,3×17,3	
xDrive18d	10/09→	105	143	ATE		[-]	**PF0581**	155,1×68,3×20,2		ATE	Ø Disc 248	[-]	**PF0624**	123,1×48,3×17,3	
xDrive18d	03/09→	100	136	ATE		[-]	**PF0581**	155,1×68,3×20,2		ATE	Ø Disc 248	[-]	**PF0624**	123,1×48,3×17,3	
xDrive20d	10/09→	130	177	ATE		[-]	**PF0581**	155,1×68,3×20,2		ATE	Ø Disc 248	[-]	**PF0624**	123,1×48,3×17,3	
xDrive20d	03/10→	120	163	ATE		[-]	**PF0581**	155,1×68,3×20,2		ATE	Ø Disc 248	[-]	**PF0624**	123,1×48,3×17,3	
xDrive23d	10/09→	150	204	ATE		[-]	**PF0581**	155,1×68,3×20,2		ATE	Ø Disc 248	[-]	**PF0624**	123,1×48,3×17,3	
xDrive25i	01/10→	160	218	ATE		[-]	**PF0581**	155,1×68,3×20,2		ATE	Ø Disc 248	[-]	**PF0624**	123,1×48,3×17,3	
xDrive28i	04/11→	180	245	ATE		[-]	**PF0581**	155,1×68,3×20,2		ATE	Ø Disc 248	[-]	**PF0624**	123,1×48,3×17,3	
xDrive28i	10/09→	190	258	ATE		[-]	**PF0581**	155,1×68,3×20,2		ATE	Ø Disc 248	[-]	**PF0624**	123,1×48,3×17,3	
X3 (E83)															
2.0 d	10/04→	110	150	ATE		[o]	**PF0153**	156,3×63,3×20		ATE		[o]	**PF0152**	123,1×59,2×17	
2.0 d	09/07→	130	177	ATE		[o]	**PF0153**	156,3×63,3×20		ATE		[o]	**PF0152**	123,1×59,2×17	
2.0 i	07/05→	110	150	ATE		[o]	**PF0153**	156,3×63,3×20		ATE		[o]	**PF0152**	123,1×59,2×17	
2.5 i	01/04→	141	192	ATE		[o]	**PF0153**	156,3×63,3×20		ATE		[o]	**PF0152**	123,1×59,2×17	
2.5 si	09/06→	160	218	ATE		[o]	**PF0153**	156,3×63,3×20		ATE		[o]	**PF0152**	123,1×59,2×17	
3.0 d	01/04→	150	204	ATE		[o]	**PF0153**	156,3×63,3×20		ATE		[o]	**PF0152**	123,1×59,2×17	
3.0 d	01/04→	160	218	ATE		[o]	**PF0153**	156,3×63,3×20		ATE		[o]	**PF0152**	123,1×59,2×17	
3.0 i	01/04→	170	231	ATE		[o]	**PF0153**	156,3×63,3×20		ATE		[o]	**PF0152**	123,1×59,2×17	
3.0 sd	09/06→	210	286	ATE		[o]	**PF0153**	156,3×63,3×20		ATE		[o]	**PF0152**	123,1×59,2×17	
3.0 si	09/06→	200	272	ATE		[o]	**PF0153**	156,3×63,3×20		ATE		[o]	**PF0152**	123,1×59,2×17	
xDrive18d	09/08→	105	143	ATE		[o]	**PF0153**	156,3×63,3×20		ATE		[o]	**PF0152**	123,1×59,2×17	
xDrive20d	09/08→	120	163	ATE		[o]	**PF0153**	156,3×63,3×20		ATE		[o]	**PF0152**	123,1×59,2×17	
xDrive20d	09/08→	130	177	ATE		[o]	**PF0153**	156,3×63,3×20		ATE		[o]	**PF0152**	123,1×59,2×17	

		KW	CV												
				SiS	i	W.i.	MAGNETI MARELLI	W×H×Th (mm)	Extra kit [Opt]	SiS	i	W.i.	MAGNETI MARELLI	W×H×Th (mm)	Extra kit [Opt]
BMW															
X3 (E83)															
xDrive20i	09/08 →	110	150	ATE		[o]	**PF0153**	156,3×63,3×20		ATE		[o]	**PF0152**	123,1×59,2×17	
xDrive25i	09/08 →	160	218	ATE		[o]	**PF0153**	156,3×63,3×20		ATE		[o]	**PF0152**	123,1×59,2×17	
xDrive30d	09/08 →	155	211	ATE		[o]	**PF0153**	156,3×63,3×20		ATE		[o]	**PF0152**	123,1×59,2×17	
xDrive30d	09/08 →	160	218	ATE		[o]	**PF0153**	156,3×63,3×20		ATE		[o]	**PF0152**	123,1×59,2×17	
xDrive30i	09/08 →	200	272	ATE		[o]	**PF0153**	156,3×63,3×20		ATE		[o]	**PF0152**	123,1×59,2×17	
xDrive35d	09/08 →	210	286	ATE		[o]	**PF0153**	156,3×63,3×20		ATE		[o]	**PF0152**	123,1×59,2×17	
X3 (F25)															
xDrive 20d	09/10 →	135	184	ATE		[o]	**PF0153**	156,3×63,3×20							
xDrive 28i	04/11 →	190	258	ATE		[o]	**PF0153**	156,3×63,3×20							
xDrive 30d	05/11 →	190	258	ATE		[o]	**PF0153**	156,3×63,3×20							
xDrive 35i	09/10 →	225	306	ATE		[o]	**PF0153**	156,3×63,3×20							
X5 (E53)															
3.0 d	05/01 →	135	184	ATE		[o]	**PF0579**	156,5×73,2×19,3		ATE		[o]	**PF0152**	123,1×59,2×17	
3.0 d	12/03 →	160	218	ATE		[o]	**PF0579**	156,5×73,2×19,3		ATE		[o]	**PF0152**	123,1×59,2×17	
3.0 d	08/04 →	155	211	ATE		[o]	**PF0579**	156,5×73,2×19,3		ATE		[o]	**PF0152**	123,1×59,2×17	
3.0 i	05/00 →	163	222	ATE		[o]	**PF0579**	156,5×73,2×19,3		ATE		[o]	**PF0152**	123,1×59,2×17	
3.0 i	05/00 →	170	231	ATE		[o]	**PF0579**	156,5×73,2×19,3		ATE		[o]	**PF0152**	123,1×59,2×17	
4.4 i	05/00 →	210	286	ATE		[o]	**PF0579**	156,5×73,2×19,3		ATE		[o]	**PF0152**	123,1×59,2×17	
4.4 i	12/03 →	235	320	ATE		[o]	**PF0579**	156,5×73,2×19,3		ATE		[o]	**PF0152**	123,1×59,2×17	
4.6 is	02/02 →	255	347							ATE		[o]	**PF0152**	123,1×59,2×17	
4.8 is	04/04 →	265	360							ATE		[o]	**PF0152**	123,1×59,2×17	
X5 (E70)															
3.0 d	02/07 →	173	235	ATE		[o]	**PF0760**	171,3×76,8×19,7		ATE	Ø Disc 345	[o]	**PF0737**	139,7×68×16,8	
3.0 d	02/07 →	173	235	ATE		[o]	**PF0760**	171,3×76,8×19,7		ATE	Ø Disc 320	[o]	**PF0487**	122×59,2×17	
3.0 d	02/07 →	155	211	ATE		[o]	**PF0760**	171,3×76,8×19,7		ATE	Ø Disc 345	[o]	**PF0737**	139,7×68×16,8	
3.0 d	02/07 →	155	211	ATE		[o]	**PF0760**	171,3×76,8×19,7		ATE	Ø Disc 320	[o]	**PF0487**	122×59,2×17	
3.0 sd	09/07 →	210	286	ATE		[o]	**PF0760**	171,3×76,8×19,7		ATE	Ø Disc 345	[o]	**PF0737**	139,7×68×16,8	
3.0 sd	09/07 →	210	286	ATE		[o]	**PF0760**	171,3×76,8×19,7		ATE	Ø Disc 320	[o]	**PF0487**	122×59,2×17	
3.0 si	02/07 →	200	272	ATE		[o]	**PF0760**	171,3×76,8×19,7		ATE	Ø Disc 345	[o]	**PF0737**	139,7×68×16,8	
3.0 si	02/07 →	200	272	ATE		[o]	**PF0760**	171,3×76,8×19,7		ATE	Ø Disc 320	[o]	**PF0487**	122×59,2×17	
4.8 i	02/07 →	261	355	ATE		[o]	**PF0760**	171,3×76,8×19,7		ATE	Ø Disc 345	[o]	**PF0737**	139,7×68×16,8	
4.8 i	02/07 →	261	355	ATE		[o]	**PF0760**	171,3×76,8×19,7		ATE	Ø Disc 320	[o]	**PF0487**	122×59,2×17	
M	09/09 →	408	555	ATE		[o]	**PF0760**	171,3×76,8×19,7		ATE	Ø Disc 345	[o]	**PF0737**	139,7×68×16,8	
M	09/09 →	408	555	ATE		[o]	**PF0760**	171,3×76,8×19,7		ATE	Ø Disc 320	[o]	**PF0487**	122×59,2×17	
xDrive30d	09/10 →	180	245	ATE		[o]	**PF0760**	171,3×76,8×19,7		ATE	Ø Disc 345	[o]	**PF0737**	139,7×68×16,8	
xDrive30d	09/10 →	180	245	ATE		[o]	**PF0760**	171,3×76,8×19,7		ATE	Ø Disc 320	[o]	**PF0487**	122×59,2×17	
xDrive30d	09/08 →	173	235	ATE		[o]	**PF0760**	171,3×76,8×19,7		ATE	Ø Disc 345	[o]	**PF0737**	139,7×68×16,8	
xDrive30d	09/08 →	173	235	ATE		[o]	**PF0760**	171,3×76,8×19,7		ATE	Ø Disc 320	[o]	**PF0487**	122×59,2×17	
xDrive30i	09/08 →	200	272	ATE		[o]	**PF0760**	171,3×76,8×19,7		ATE	Ø Disc 345	[o]	**PF0737**	139,7×68×16,8	
xDrive30i	09/08 →	200	272	ATE		[o]	**PF0760**	171,3×76,8×19,7		ATE	Ø Disc 320	[o]	**PF0487**	122×59,2×17	
xDrive35d	09/08 →	210	286	ATE		[o]	**PF0760**	171,3×76,8×19,7		ATE	Ø Disc 345	[o]	**PF0737**	139,7×68×16,8	
xDrive35d	09/08 →	210	286	ATE		[o]	**PF0760**	171,3×76,8×19,7		ATE	Ø Disc 320	[o]	**PF0487**	122×59,2×17	
xDrive35i	09/10 →	225	306	ATE		[o]	**PF0760**	171,3×76,8×19,7		ATE	Ø Disc 345	[o]	**PF0737**	139,7×68×16,8	
xDrive35i	09/10 →	225	306	ATE		[o]	**PF0760**	171,3×76,8×19,7		ATE	Ø Disc 320	[o]	**PF0487**	122×59,2×17	

		KW	CV													
				SiS	i	W.i.	MAGNETI MARELLI	W×H×Th (mm)	Extra kit [Opt]	SiS	i	W.i.	MAGNETI MARELLI	W×H×Th (mm)	Extra kit [Opt]
BMV															
X5 (E70)															
xDrive40d	09/10→	225	306	ATE		[o]	**PF0760**	171,3×76,8×19,7		ATE	Ø Disc 345	[o]	**PF0737**	139,7×68×16,8	
xDrive40d	09/10→	225	306	ATE		[o]	**PF0760**	171,3×76,8×19,7		ATE	Ø Disc 320	[o]	**PF0487**	122×59,2×17	
xDrive48i	09/08→	261	355							ATE	Ø Disc 345	[o]	**PF0737**	139,7×68×16,8	
xDrive48i	09/08→	261	355							ATE	Ø Disc 320	[o]	**PF0487**	122×59,2×17	
xDrive50i	06/10→	300	408							ATE	Ø Disc 345	[o]	**PF0737**	139,7×68×16,8	
xDrive50i	06/10→	300	408							ATE	Ø Disc 320	[o]	**PF0487**	122×59,2×17	
X6 (E71, E72)															
30d	05/08→	173	235	ATE		[o]	**PF0760**	171,3×76,8×19,7		ATE	Ø Disc 345	[o]	**PF0737**	139,7×68×16,8	
30d	05/08→	173	235	ATE		[o]	**PF0760**	171,3×76,8×19,7		ATE	Ø Disc 320	[o]	**PF0487**	122×59,2×17	
35d	05/08→	210	286	ATE		[o]	**PF0760**	171,3×76,8×19,7		ATE	Ø Disc 345	[o]	**PF0737**	139,7×68×16,8	
35d	05/08→	210	286	ATE		[o]	**PF0760**	171,3×76,8×19,7		ATE	Ø Disc 320	[o]	**PF0487**	122×59,2×17	
35i	05/08→	225	306	ATE		[o]	**PF0760**	171,3×76,8×19,7		ATE	Ø Disc 345	[o]	**PF0737**	139,7×68×16,8	
35i	05/08→	225	306	ATE		[o]	**PF0760**	171,3×76,8×19,7		ATE	Ø Disc 320	[o]	**PF0487**	122×59,2×17	
50i	05/08→	300	408	ATE		[o]	**PF0760**	171,3×76,8×19,7		ATE	Ø Disc 345	[o]	**PF0737**	139,7×68×16,8	
50i	05/08→	300	408	ATE		[o]	**PF0760**	171,3×76,8×19,7		ATE	Ø Disc 320	[o]	**PF0487**	122×59,2×17	
ActiveHybrid	10/10→	357	485	ATE		[o]	**PF0760**	171,3×76,8×19,7		ATE	Ø Disc 345	[o]	**PF0737**	139,7×68×16,8	
ActiveHybrid	10/10→	357	485	ATE		[o]	**PF0760**	171,3×76,8×19,7		ATE	Ø Disc 320	[o]	**PF0487**	122×59,2×17	
M	09/09→	408	555	ATE		[o]	**PF0760**	171,3×76,8×19,7		ATE	Ø Disc 345	[o]	**PF0737**	139,7×68×16,8	
M	09/09→	408	555	ATE		[o]	**PF0760**	171,3×76,8×19,7		ATE	Ø Disc 320	[o]	**PF0487**	122×59,2×17	
xDrive30d	09/10→	180	245	ATE		[o]	**PF0760**	171,3×76,8×19,7		ATE	Ø Disc 345	[o]	**PF0737**	139,7×68×16,8	
xDrive30d	09/10→	180	245	ATE		[o]	**PF0760**	171,3×76,8×19,7		ATE	Ø Disc 320	[o]	**PF0487**	122×59,2×17	
xDrive30d	09/10→	155	211	ATE		[o]	**PF0760**	171,3×76,8×19,7		ATE	Ø Disc 345	[o]	**PF0737**	139,7×68×16,8	
xDrive30d	09/10→	155	211	ATE		[o]	**PF0760**	171,3×76,8×19,7		ATE	Ø Disc 320	[o]	**PF0487**	122×59,2×17	
xDrive30d	09/08→	173	235	ATE		[o]	**PF0760**	171,3×76,8×19,7		ATE	Ø Disc 345	[o]	**PF0737**	139,7×68×16,8	
xDrive30d	09/08→	173	235	ATE		[o]	**PF0760**	171,3×76,8×19,7		ATE	Ø Disc 320	[o]	**PF0487**	122×59,2×17	
xDrive35d	09/08→	210	286							ATE	Ø Disc 345	[o]	**PF0737**	139,7×68×16,8	
xDrive35d	09/08→	210	286							ATE	Ø Disc 320	[o]	**PF0487**	122×59,2×17	
xDrive35i	09/08→	225	306							ATE	Ø Disc 345	[o]	**PF0737**	139,7×68×16,8	
xDrive35i	09/08→	225	306							ATE	Ø Disc 320	[o]	**PF0487**	122×59,2×17	
xDrive40d	10/10→	225	306							ATE	Ø Disc 345	[o]	**PF0737**	139,7×68×16,8	
xDrive40d	10/10→	225	306							ATE	Ø Disc 320	[o]	**PF0487**	122×59,2×17	
xDrive50i	09/08→	300	408							ATE	Ø Disc 345	[o]	**PF0737**	139,7×68×16,8	
xDrive50i	09/08→	300	408							ATE	Ø Disc 320	[o]	**PF0487**	122×59,2×17	
CADILLAC															
ATS															
2.0	02/13→	203		BR		[+]	**PF0502**	131,8×77,3×16,1							
2.0 AWD	02/13→	203		BR		[+]	**PF0502**	131,8×77,3×16,1							
2.0 T	02/13→	203		BR		[+]	**PF0502**	131,8×77,3×16,1							
2.0 T AWD	02/13→	203		BR		[+]	**PF0502**	131,8×77,3×16,1							

		KW	CV													
				SiS	i	W.i.	MAGNETI MARELLI	W×H×Th (mm)	Extra kit [Opt]	SiS	i	W.i.	MAGNETI MARELLI	W×H×Th (mm)	Extra kit [Opt]
CHEVROLET (DAEWOO)																
Aveo 2 Volumi (T200, T250)																
1.2	04/08→	55	75	AK		[-]	**PF0163**	133,2×49×17,8								
1.2	04/08→	62	84	AK		[-]	**PF0163**	133,2×49×17,8								
1.2	10/08→	56	76	AK		[-]	**PF0163**	133,2×49×17,8								
1.4	04/08→	74	101	AK		[-]	**PF0163**	133,2×49×17,8								
Aveo 3 Volumi (T200, T250)																
1.2	01/08→	62	84	AK		[-]	**PF0163**	133,2×49×17,8								
1.2	01/08→	55	75	AK		[-]	**PF0163**	133,2×49×17,8								
1.2	03/06→	56	76	AK		[-]	**PF0163**	133,2×49×17,8								
1.2	03/06→	53	72	AK		[-]	**PF0163**	133,2×49×17,8								
1.4	03/06→	69	94	AK		[-]	**PF0163**	133,2×49×17,8								
1.4	01/08→	74	101	AK		[-]	**PF0163**	133,2×49×17,8								
1.4 CNG	01/10→	69	94	AK		[-]	**PF0163**	133,2×49×17,8								
1.5	05/05→	62	84	AK		[-]	**PF0163**	133,2×49×17,8								
1.6	03/06→	75	102	AK		[-]	**PF0163**	133,2×49×17,8								
1.6	12/04→09/06	77	105	AK		[-]	**PF0163**	133,2×49×17,8								
Aveo II 2 Volumi (T300)																
1.2	03/11→	51	69	AK	Hatchback	[-]	**PF0163**	133,2×49×17,8								
1.2	03/11→	51	69	AK	Hatchback	[+]	**PF0511**	133,2×49×17,8								
1.2	03/11→	63	86	AK	Hatchback	[-]	**PF0163**	133,2×49×17,8								
1.2	03/11→	63	86	AK	Hatchback	[+]	**PF0511**	133,2×49×17,8								
1.3 D	07/11→	70	95	AK	Hatchback	[-]	**PF0163**	133,2×49×17,8								
1.3 D	07/11→	70	95	AK	Hatchback	[+]	**PF0511**	133,2×49×17,8								
1.4	03/11→	74	101	AK	Hatchback	[-]	**PF0163**	133,2×49×17,8								
1.4	03/11→	74	101	AK	Hatchback	[+]	**PF0511**	133,2×49×17,8								
1.6	03/11→	85	116	AK	Hatchback	[-]	**PF0163**	133,2×49×17,8								
1.6	03/11→	85	116	AK	Hatchback	[+]	**PF0511**	133,2×49×17,8								
Aveo II 3 Volumi (T300)																
1.2	03/11→	63	86	AK		[-]	**PF0163**	133,2×49×17,8								
1.2	03/11→	63	86	AK		[+]	**PF0511**	133,2×49×17,8								
1.2	03/11→	51	69	AK		[-]	**PF0163**	133,2×49×17,8								
1.2	03/11→	51	69	AK		[+]	**PF0511**	133,2×49×17,8								
1.4	07/11→	74	100	AK		[-]	**PF0163**	133,2×49×17,8								
1.4	07/11→	74	100	AK		[+]	**PF0511**	133,2×49×17,8								
1.6	03/11→	85	116	AK		[-]	**PF0163**	133,2×49×17,8								
1.6	03/11→	85	116	AK		[+]	**PF0511**	133,2×49×17,8								
Corvette (C7)																
6.2	09/13→	321		BR		[+]	**PF0502**	131,8×77,3×16,1								
Corvette Convertibile (C7)																
6.2	09/13→	325		BR		[+]	**PF0502**	131,8×77,3×16,1								
Cruze (J300)																
1.6	05/09→	91	124	ATE	Ø Disc 276/15"	[+]	**PF0424**	148×61,1×18,8		LG	Ø Disc 300	[+]	**PF0433**	116,6×42,7×16,2	
1.6	05/09→	91	124	ATE	Ø Disc 300/16"	[+]	**PF0694**	148×60,3×18,8		LG	Ø Disc 300	[+]	**PF0433**	116,6×42,7×16,2	

		KW	CV													
				SiS	i	W.i.	MAGNETI MARELLI	W×H×Th (mm)	Extra kit [Opt]	SiS	i	W.i.	MAGNETI MARELLI	W×H×Th (mm)	Extra kit [Opt]
CHEVROLET (DAEWOO)																
Cruze (J300)																
1.6	05/09→	80	109	ATE	Ø Disc 276/15"	[+]	**PF0424**	148×61,1×18,8		LG	Ø Disc 300	[+]	**PF0433**	116,6×42,7×16,2	
1.6	05/09→	80	109	ATE	Ø disc 300/16"	[+]	**PF0694**	148×60,3×18,8		LG	Ø Disc 300	[+]	**PF0433**	116,6×42,7×16,2	
1.6	05/09→	83	113	ATE	Ø Disc 276/15"	[+]	**PF0424**	148×61,1×18,8		LG	Ø Disc 300	[+]	**PF0433**	116,6×42,7×16,2	
1.6	05/09→	83	113	ATE	Ø disc 300/16"	[+]	**PF0694**	148×60,3×18,8		LG	Ø Disc 300	[+]	**PF0433**	116,6×42,7×16,2	
1.6	05/09→	82	111	ATE	Ø Disc 276/15"	[+]	**PF0424**	148×61,1×18,8		LG	Ø Disc 300	[+]	**PF0433**	116,6×42,7×16,2	
1.6	05/09→	82	111	ATE	Ø disc 300/16"	[+]	**PF0694**	148×60,3×18,8		LG	Ø Disc 300	[+]	**PF0433**	116,6×42,7×16,2	
1.8	05/09→	104	141	ATE	Ø Disc 276/15"	[+]	**PF0424**	148×61,1×18,8		LG	Ø Disc 300	[+]	**PF0433**	116,6×42,7×16,2	
1.8	05/09→	104	141	ATE	Ø disc 300/16"	[+]	**PF0694**	148×60,3×18,8		LG	Ø Disc 300	[+]	**PF0433**	116,6×42,7×16,2	
1.8	05/09→	102	139	ATE	Ø Disc 276/15"	[+]	**PF0424**	148×61,1×18,8		LG	Ø Disc 300	[+]	**PF0433**	116,6×42,7×16,2	
1.8	05/09→	102	139	ATE	Ø disc 300/16"	[+]	**PF0694**	148×60,3×18,8		LG	Ø Disc 300	[+]	**PF0433**	116,6×42,7×16,2	
2.0 CDI	08/10→	120	163	ATE	Ø Disc 276/15"	[+]	**PF0424**	148×61,1×18,8		LG	Ø Disc 300	[+]	**PF0433**	116,6×42,7×16,2	
2.0 CDI	08/10→	120	163	ATE	Ø disc 300/16"	[+]	**PF0694**	148×60,3×18,8		LG	Ø Disc 300	[+]	**PF0433**	116,6×42,7×16,2	
2.0 CDI	05/09→	110	150	ATE	Ø Disc 276/15"	[+]	**PF0424**	148×61,1×18,8		LG	Ø Disc 300	[+]	**PF0433**	116,6×42,7×16,2	
2.0 CDI	05/09→	110	150	ATE	Ø disc 300/16"	[+]	**PF0694**	148×60,3×18,8		LG	Ø Disc 300	[+]	**PF0433**	116,6×42,7×16,2	
2.0 CDI	05/09→	109	148	ATE	Ø Disc 276/15"	[+]	**PF0424**	148×61,1×18,8		LG	Ø Disc 300	[+]	**PF0433**	116,6×42,7×16,2	
2.0 CDI	05/09→	109	148	ATE	Ø disc 300/16"	[+]	**PF0694**	148×60,3×18,8		LG	Ø Disc 300	[+]	**PF0433**	116,6×42,7×16,2	
2.0 CDI	05/09→	90	123	ATE	Ø Disc 276/15"	[+]	**PF0424**	148×61,1×18,8		LG	Ø Disc 300	[+]	**PF0433**	116,6×42,7×16,2	
2.0 CDI	05/09→	90	123	ATE	Ø disc 300/16"	[+]	**PF0694**	148×60,3×18,8		LG	Ø Disc 300	[+]	**PF0433**	116,6×42,7×16,2	
2.0 CDI	05/09→	92	125	ATE	Ø Disc 276/15"	[+]	**PF0424**	148×61,1×18,8		LG	Ø Disc 300	[+]	**PF0433**	116,6×42,7×16,2	
2.0 CDI	05/09→	92	125	ATE	Ø disc 300/16"	[+]	**PF0694**	148×60,3×18,8		LG	Ø Disc 300	[+]	**PF0433**	116,6×42,7×16,2	

		KW	CV													
				SiS	i	W.i.	MAGNETI MARELLI	W×H×Th (mm)	Extra kit [Opt]	SiS	i	W.i.	MAGNETI MARELLI	W×H×Th (mm)	Extra kit [Opt]
CHEVROLET (DAEWOO)																
Cruze SW (J308)																
1.4	05/09→	103	140	ATE	Ø disc 300/16"	[+]	PF0694	148×60,3×18,8		LG		[+]	PF0433	116,6×42,7×16,2	
1.4	05/09→	103	140	ATE	Ø Disc 276/15"	[+]	PF0424	148×61,1×18,8		LG		[+]	PF0433	116,6×42,7×16,2	
1.6	05/09→	86	117	ATE	Ø disc 300/16"	[+]	PF0694	148×60,3×18,8		LG		[+]	PF0433	116,6×42,7×16,2	
1.6	05/09→	86	117	ATE	Ø Disc 276/15"	[+]	PF0424	148×61,1×18,8		LG		[+]	PF0433	116,6×42,7×16,2	
1.6	05/09→	89	121	ATE	Ø disc 300/16"	[+]	PF0694	148×60,3×18,8		LG		[+]	PF0433	116,6×42,7×16,2	
1.6	05/09→	89	121	ATE	Ø Disc 276/15"	[+]	PF0424	148×61,1×18,8		LG		[+]	PF0433	116,6×42,7×16,2	
1.6	05/09→	91	124	ATE	Ø disc 300/16"	[+]	PF0694	148×60,3×18,8		LG		[+]	PF0433	116,6×42,7×16,2	
1.6	05/09→	91	124	ATE	Ø Disc 276/15"	[+]	PF0424	148×61,1×18,8		LG		[+]	PF0433	116,6×42,7×16,2	
1.8	05/09→	104	141	ATE	Ø disc 300/16"	[+]	PF0694	148×60,3×18,8		LG		[+]	PF0433	116,6×42,7×16,2	
1.8	05/09→	104	141	ATE	Ø Disc 276/15"	[+]	PF0424	148×61,1×18,8		LG		[+]	PF0433	116,6×42,7×16,2	
1.8	05/09→	108	147	ATE	Ø disc 300/16"	[+]	PF0694	148×60,3×18,8		LG		[+]	PF0433	116,6×42,7×16,2	
1.8	05/09→	108	147	ATE	Ø Disc 276/15"	[+]	PF0424	148×61,1×18,8		LG		[+]	PF0433	116,6×42,7×16,2	
1.6 T	05/09→	135	184	ATE	Ø disc 300/16"	[+]	PF0694	148×60,3×18,8		LG		[+]	PF0433	116,6×42,7×16,2	
1.6 T	05/09→	135	184	ATE	Ø Disc 276/15"	[+]	PF0424	148×61,1×18,8		LG		[+]	PF0433	116,6×42,7×16,2	
1.7 TD	05/09→	96	131	ATE	Ø disc 300/16"	[+]	PF0694	148×60,3×18,8		LG		[+]	PF0433	116,6×42,7×16,2	
1.7 TD	05/09→	96	131	ATE	Ø Disc 276/15"	[+]	PF0424	148×61,1×18,8		LG		[+]	PF0433	116,6×42,7×16,2	
2.0 TD	05/09→	120	163	ATE	Ø disc 300/16"	[+]	PF0694	148×60,3×18,8		LG		[+]	PF0433	116,6×42,7×16,2	
2.0 TD	05/09→	120	163	ATE	Ø Disc 276/15"	[+]	PF0424	148×61,1×18,8		LG		[+]	PF0433	116,6×42,7×16,2	
Evanda (KLA)																
2.0	03/05→	96	131	ST		[+]	PF0206	143×51,5×17							
2.0	03/05→	96	131	ST		[+]	PF0206	143×51,5×17							
Epica (KL1)																
1.8	01/06→	90	122	ST		[+]	PF0206	143×51,5×17							
2.0	06/06→	105	144	ST		[+]	PF0206	143×51,5×17							
2.0	06/06→	105	144	ST		[+]	PF0206	143×51,5×17							
2.0	01/05→12/06	98	133	ST		[+]	PF0206	143×51,5×17							

		KW	CV	SiS	i	W.i.	MAGNETI MARELLI	W×H×Th (mm)	Extra kit [Opt]	SiS	i	W.i.	MAGNETI MARELLI	W×H×Th (mm)	Extra kit [Opt]
CHEVROLET (DAEWOO)															
Epica (KL1)															
2.0	01/05 → 12/06	98	133	ST		[+]	**PF0206**	143×51,5×17							
2.0	01/05 → 12/06	94	128	ST		[+]	**PF0206**	143×51,5×17							
2.0	01/05 → 12/06	94	128	ST		[+]	**PF0206**	143×51,5×17							
2.0	08/06 →	85	116	ST		[+]	**PF0206**	143×51,5×17							
2.0	08/06 →	85	116	ST		[+]	**PF0206**	143×51,5×17							
2.0	08/06 →	96	131	ST		[+]	**PF0206**	143×51,5×17							
2.0	08/06 →	96	131	ST		[+]	**PF0206**	143×51,5×17							
2.0 D	01/07 →	110	150	ST		[+]	**PF0206**	143×51,5×17							
2.0 D	01/07 →	110	150	ST		[+]	**PF0206**	143×51,5×17							
2.5	06/06 →	115	156	ST		[+]	**PF0206**	143×51,5×17							
2.5	06/06 →	115	156	ST		[+]	**PF0206**	143×51,5×17							
Kalos															
1.2	03/05 →	53	72	AK		[-]	**PF0163**	133,2×49×17,8							
1.2	03/05 →	53	72	AK		[+]	**PF0511**	133,2×49×17,8							
1.4	03/05 →	61	83	AK		[-]	**PF0163**	133,2×49×17,8							
1.4	03/05 →	61	83	AK		[+]	**PF0511**	133,2×49×17,8							
1.4 16V	03/05 →	69	94	AK		[-]	**PF0163**	133,2×49×17,8							
1.4 16V	03/05 →	69	94	AK		[+]	**PF0511**	133,2×49×17,8							
1.6	06/06 → 05/08	77	105	AK		[-]	**PF0163**	133,2×49×17,8							
1.6	06/06 → 05/08	77	105	AK		[+]	**PF0511**	133,2×49×17,8							
Kalos 3 Volumi															
1.2	03/05 →	53	72	AK		[-]	**PF0163**	133,2×49×17,8							
1.2	03/05 →	53	72	AK		[+]	**PF0511**	133,2×49×17,8							
1.4	03/05 →	61	83	AK		[-]	**PF0163**	133,2×49×17,8							
1.4	03/05 →	61	83	AK		[+]	**PF0511**	133,2×49×17,8							
1.4 16V	03/05 →	69	94	AK		[-]	**PF0163**	133,2×49×17,8							
1.4 16V	03/05 →	69	94	AK		[+]	**PF0511**	133,2×49×17,8							
Lacetti (KLA.)															
1.4 16V	03/05 →	70	95	ST		[+]	**PF0207**	143×51×17							
1.6	03/05 →	80	109	ST		[+]	**PF0207**	143×51×17							
1.8	03/05 →	90	122	ST		[+]	**PF0207**	143×51×17							
1.8	08/05 →	89	121	ST		[+]	**PF0207**	143×51×17							
2.0 D	01/07 →	89	121	ST		[+]	**PF0207**	143×51×17							
Matiz															
0.8	03/05 →	38	52	AK		[-]	**PF0164**	127×48×16							
0.8 LPG	03/05 →	38	52	AK		[-]	**PF0164**	127×48×16							
1.0	03/05 →	47	64	AK		[-]	**PF0164**	127×48×16							
1.0	03/05 →	49	67	AK		[-]	**PF0164**	127×48×16							
1.0 LPG	03/05 →	49	67	AK		[-]	**PF0164**	127×48×16							
Nubira Berlina (KL.)															
1.6i 16V	03/05 →			ST		[-]	**PF0510**	143×51×17							
1.6i 16V	03/05 →			ST		[+]	**PF0207**	143×51×17							
2.0i 16V	03/05 →			ST		[-]	**PF0510**	143×51×17							
2.0i 16V	03/05 →			ST		[+]	**PF0207**	143×51×17							

		KW	CV												
				SiS	i	W.i.	MAGNETI MARELLI	W×H×Th (mm)	Extra kit [Opt]	SiS	i	W.i.	MAGNETI MARELLI	W×H×Th (mm)	Extra kit [Opt]
CHEVROLET (DAEWOO)															
Nubira SW (KL.)															
1.6i 16V	03/05→			ST		[-]	**PF0510**	143×51×17							
1.6i 16V	03/05→			ST		[+]	**PF0207**	143×51×17							
2.0i 16V	03/05→			ST		[-]	**PF0510**	143×51×17							
2.0i 16V	03/05→			ST		[+]	**PF0207**	143×51×17							
Orlando															
1.8	02/11→	104	141	ATE	16"	[+]	**PF0694**	148×60,3×18,8		LG		[+]	**PF0433**	116,6×42,7×16,2	
1.8	02/11→	104	141	ATE		[+]	**PF0424**	148×61,1×18,8		LG		[+]	**PF0433**	116,6×42,7×16,2	
2.0 D	02/11→	96	131	ATE	16"	[+]	**PF0694**	148×60,3×18,8		LG		[+]	**PF0433**	116,6×42,7×16,2	
2.0 D	02/11→	96	131	ATE		[+]	**PF0424**	148×61,1×18,8		LG		[+]	**PF0433**	116,6×42,7×16,2	
2.0 D	02/11→	120	163	ATE	16"	[+]	**PF0694**	148×60,3×18,8		LG		[+]	**PF0433**	116,6×42,7×16,2	
2.0 D	02/11→	120	163	ATE		[+]	**PF0424**	148×61,1×18,8		LG		[+]	**PF0433**	116,6×42,7×16,2	
Rezzo															
1.6	03/05→	77	105	ST		[+]	**PF0207**	143×51×17							
1.6	08/05→	79	107	ST		[+]	**PF0207**	143×51×17							
2.0	03/05→	89	121	ST		[+]	**PF0207**	143×51×17							
2.0	08/05→	90	122	ST		[+]	**PF0207**	143×51×17							
Spark															
0.8	09/00→	38	52	AK		[-]	**PF0164**	127×48×16							
0.8	05/05→	37	50	AK		[-]	**PF0164**	127×48×16							
1.0	11/02→	47	64	AK		[-]	**PF0164**	127×48×16							
1.0 SX	06/09→	44	60	AK		[-]	**PF0164**	127×48×16							
1.0 SX	05/05→	46	63	AK		[-]	**PF0164**	127×48×16							
Spark (M300)															
1.0	10→			AK		[-]	**PF0164**	127×48×16							
1.2	10→			AK		[-]	**PF0164**	127×48×16							
Tacuma (KLAU)															
1.6i 16V	01/05→			ST		[+]	**PF0207**	143×51×17							
2.0i 16V	02/05→			ST		[+]	**PF0207**	143×51×17							
Trax															
1.4	12/12→	103	140	ATE	4x4	[+]	**PF0424**	148×61,1×18,8		LG		[+]	**PF0433**	116,6×42,7×16,2	
1.4	12/12→	103	140	ATE		[+]	**PF0424**	148×61,1×18,8		LG		[+]	**PF0433**	116,6×42,7×16,2	
1.4 LPG	04/13→	103	140	ATE		[+]	**PF0424**	148×61,1×18,8		LG		[+]	**PF0433**	116,6×42,7×16,2	
1.6	12/12→	85	116	ATE		[+]	**PF0424**	148×61,1×18,8		LG		[+]	**PF0433**	116,6×42,7×16,2	
1.6	12/12→	85	116	ATE	4x4	[+]	**PF0424**	148×61,1×18,8		LG		[+]	**PF0433**	116,6×42,7×16,2	
1.8	03/13→	103	140	ATE		[+]	**PF0424**	148×61,1×18,8		LG		[+]	**PF0433**	116,6×42,7×16,2	
1.8	03/13→	103	140	ATE		[+]	**PF0424**	148×61,1×18,8		LG		[+]	**PF0433**	116,6×42,7×16,2	
1.8 E85	03/13→	106	144	ATE		[+]	**PF0424**	148×61,1×18,8		LG		[+]	**PF0433**	116,6×42,7×16,2	
1.7 TD	12/12→	96	131	ATE		[+]	**PF0424**	148×61,1×18,8		LG		[+]	**PF0433**	116,6×42,7×16,2	
1.7 TD	12/12→	96	131	ATE	4x4	[+]	**PF0424**	148×61,1×18,8		LG		[+]	**PF0433**	116,6×42,7×16,2	

		KW	CV	SiS	i	W.i.	MAGNETI MARELLI	W×H×Th (mm)	Extra kit [Opt]	SiS	i	W.i.	MAGNETI MARELLI	W×H×Th (mm)	Extra kit [Opt]
CHRYSLER															
300 M (LR)															
2.7 V6 24V	11/98 → 08/00	149	203	KH		[-]	**PF0785**	165,2×51,6×17							
2.7 V6 24V	08/00 → 09/04	150	204	KH		[-]	**PF0785**	165,2×51,6×17							
3.5 V6 24V	07/98 → 08/00	187	254	KH		[-]	**PF0785**	165,2×51,6×17							
3.5 V6 24V	08/00 → 09/04	185	252	KH		[-]	**PF0785**	165,2×51,6×17							
Crossfire															
3.2	07/03 →	160	218	ATE		[o]	**PF0315**	156,4×63,8×20	OK020	ATE		[-]	**PF0311**	63,8×73×14,2	
SRT-6	09/04 →	246	335	ATE		[o]	**PF0315**	156,4×63,8×20	OK020	ATE		[-]	**PF0311**	63,8×73×14,2	
Crossfire Roadster															
3.2	05/04 →	160	218	ATE		[o]	**PF0315**	156,4×63,8×20	OK020	ATE		[-]	**PF0311**	63,8×73×14,2	
SRT-6	09/04 →	246	335	ATE		[o]	**PF0315**	156,4×63,8×20	OK020	ATE		[-]	**PF0311**	63,8×73×14,2	
Grand Voyager II (GS)															
2.0i	01/95 → 03/01			KH		[-]	**PF0785**	165,2×51,6×17							
2.4i	01/95 → 03/01			KH		[-]	**PF0785**	165,2×51,6×17							
2.5 TD	01/95 → 03/01			KH		[-]	**PF0785**	165,2×51,6×17							
3.0	01/95 → 03/01			KH		[-]	**PF0785**	165,2×51,6×17							
3.1i	01/95 → 03/01			KH		[-]	**PF0785**	165,2×51,6×17							
Grand Voyager IV															
2.8 CRD	10/07 →			ST		[+]	**PF0211**	146×64×18		LG		[+]	**PF0210**	116,7×52,6×17	
3.3	01/08 →			ST		[+]	**PF0211**	146×64×18		LG		[+]	**PF0210**	116,7×52,6×17	
3.8	10/07 →			ST		[+]	**PF0211**	146×64×18		LG		[+]	**PF0210**	116,7×52,6×17	
LHS															
3.5 24V	01/94 → 12/97	160	218	KH		[-]	**PF0785**	165,2×51,6×17							
3.5 24V	01/94 → 12/01	160	218	KH		[-]	**PF0785**	165,2×51,6×17							
Neon (PL)															
1.8 16V	09/97 → 08/99	85	116	KH		[-]	**PF0785**	165,2×51,6×17							
2.0	10/96 → 09/00	118	160	KH		[-]	**PF0785**	165,2×51,6×17							
2.0 16V	05/94 → 08/99	98	133	KH		[-]	**PF0785**	165,2×51,6×17							
2.0 16V	06/94 → 08/99	107	145	KH		[-]	**PF0785**	165,2×51,6×17							
2.0 16V	04/96 → 08/99	109	148	KH		[-]	**PF0785**	165,2×51,6×17							
Neon II															
1.6	11/01 →	85	116	KH		[-]	**PF0785**	165,2×51,6×17							
2.0 16V	08/99 →	98	133	KH		[-]	**PF0785**	165,2×51,6×17							
2.0 16V	10/02 → 12/06	97	131	KH		[-]	**PF0785**	165,2×51,6×17							
2.0 16V R/T	10/01 →	110	150	KH		[-]	**PF0785**	165,2×51,6×17							
2.4	10/01 → 09/05	160	218	KH		[-]	**PF0785**	165,2×51,6×17							
New Yorker															
3.5 i 24V	04/93 → 09/98	155	211	KH		[-]	**PF0785**	165,2×51,6×17							
Sebring II (JS)															
2.0 CRD	07/07 → 12/10	103	140	ST		[+]	**PF0338**	144,9×54,9×15,6		AK		[+]	**PF0445**	91×44,8 ×15,4	
2.0 VVT	07/07 → 12/10	115	156	ST		[+]	**PF0338**	144,9×54,9×15,6		AK		[+]	**PF0445**	91×44,8 ×15,4	
2.4 VVT	07/07 → 12/10	125	170	ST		[+]	**PF0338**	144,9×54,9×15,6		AK		[+]	**PF0445**	91×44,8 ×15,4	
2.7 VVT	07/07 → 12/10	141	192	ST		[+]	**PF0338**	144,9×54,9×15,6		AK		[+]	**PF0445**	91×44,8 ×15,4	
3.5 AWD	11/07 → 12/10	175	238	ST		[+]	**PF0338**	144,9×54,9×15,6		AK		[+]	**PF0445**	91×44,8 ×15,4	

		KW	CV	SiS	i	W.i.	MAGNETI MARELLI	W×H×Th (mm)	Extra kit [Opt]	SiS	i	W.i.	MAGNETI MARELLI	W×H×Th (mm)	Extra kit [Opt]
CHRYSLER															
Sebring Cabriolet II															
2.0 CRD	07/07 → 12/10	103	140	ST		[+]	**PF0338**	144,9×54,9×15,6		AK		[+]	**PF0445**	91×44,8 ×15,4	
2.4 VVT	07/07 → 12/10	125	170	ST		[+]	**PF0338**	144,9×54,9×15,6		AK		[+]	**PF0445**	91×44,8 ×15,4	
2.7	07/07 → 12/10	137	186	ST		[+]	**PF0338**	144,9×54,9×15,6		AK		[+]	**PF0445**	91×44,8 ×15,4	
2.7 VVT	07/07 → 12/10	141	192	ST		[+]	**PF0338**	144,9×54,9×15,6		AK		[+]	**PF0445**	91×44,8 ×15,4	
Town Country															
Town Country	97 →			KH		[-]	**PF0785**	165,2×51,6×17							
Vision															
3.5 TSi	09/93 →	155	211	KH		[-]	**PF0785**	165,2×51,6×17							
Voyager II (ES)															
2.5 i	01/91 → 09/95	72	98	KH		[-]	**PF0785**	165,2×51,6×17							
2.5 i	08/90 → 09/95	74	101	KH		[-]	**PF0785**	165,2×51,6×17							
2.5 TD	01/92 → 09/95	87	118	KH		[-]	**PF0785**	165,2×51,6×17							
3.0	10/90 → 09/95	104	141	KH		[-]	**PF0785**	165,2×51,6×17							
3.0 i	01/91 → 09/95	108	147	KH		[-]	**PF0785**	165,2×51,6×17							
3.3 i	08/90 → 09/95	110	150	KH		[-]	**PF0785**	165,2×51,6×17							
3.3 i	08/90 → 09/95	120	163	KH		[-]	**PF0785**	165,2×51,6×17							
3.3 i AWD	08/90 → 09/95	110	150	KH		[-]	**PF0785**	165,2×51,6×17							
3.3 i AWD	08/90 → 09/95	120	163	KH		[-]	**PF0785**	165,2×51,6×17							
Voyager III (GS)															
2.0 i	01/95 → 03/01	98	133	KH		[-]	**PF0785**	165,2×51,6×17							
2.4 AWD	02/97 → 03/01	111	151	KH		[-]	**PF0785**	165,2×51,6×17							
2.4 i	01/95 → 03/01	111	151	KH		[-]	**PF0785**	165,2×51,6×17							
2.5 TD	01/95 → 03/01	85	116	KH		[-]	**PF0785**	165,2×51,6×17							
2.5 TDIC AWD	10/95 → 03/01	85	116	KH		[-]	**PF0785**	165,2×51,6×17							
3.0	01/95 → 03/01	112	152	KH		[-]	**PF0785**	165,2×51,6×17							
3.3 i	01/95 → 03/01	116	158	KH		[-]	**PF0785**	165,2×51,6×17							
3.8 i AWD	01/95 → 03/01	122	166	KH		[-]	**PF0785**	165,2×51,6×17							
3.8 i AWD	01/95 → 03/01	131	178	KH		[-]	**PF0785**	165,2×51,6×17							
Voyager V (RT)															
2.8 CRD	10/07 →	120	163	ST		[+]	**PF0211**	146×64×18		LG		[+]	**PF0210**	116,7×52,6×17	
2.8 CRD	10/07 →	120	163	ST		[+]	**PF0211**	146×64×18		LG		[+]	**PF0210**	116,7×52,6×17	
3.3	01/08 →	125	170	ST		[+]	**PF0211**	146×64×18		LG		[+]	**PF0210**	116,7×52,6×17	
3.8	10/07 →	142	193	ST		[+]	**PF0211**	146×64×18		LG		[+]	**PF0210**	116,7×52,6×17	
3.8	10/07 →	142	190	ST		[+]	**PF0211**	146×64×18		LG		[+]	**PF0210**	116,7×52,6×17	
Ypsilon (846)															
0.9 CNG	05/11 →	63	86	ATE	+2 w.i.	[+]	**PF0428**	149,3×52,5×17,4							
0.9 Twinair	05/11 →	63	86	ATE	+2 w.i.	[+]	**PF0428**	149,3×52,5×17,4							
0.9 T.Air Metano	12 →	63	80	ATE	+2 w.i.	[+]	**PF0428**	149,3×52,5×17,4							
1.2	05/11 →	51	69	ATE	+2 w.i.	[+]	**PF0428**	149,3×52,5×17,4							
1.2 Bifuel	05/11 →	49	67	ATE	+2 w.i.	[+]	**PF0428**	149,3×52,5×17,4							
1.3 Multijet	05/11 →	70	95	ATE	+2 w.i.	[+]	**PF0428**	149,3×52,5×17,4							

		KW	CV	SiS	i	W.i.	MAGNETI MARELLI	W×H×Th (mm)	Extra kit [Opt]	SiS	i	W.i.	MAGNETI MARELLI	W×H×Th (mm)	Extra kit [Opt]
CITROËN															
AX															
All types	91→			BD		[+]	**PF0168**	105×54,3×18							
1.5D Sport	95→			BD		[+]	**PF0168**	105×54,3×18							
AX Van															
Van All types	88→			CT		[+]	**PF0165**	71,8×60,6×17							
Berlingo															
1.1i	10/01→			BSC		[-]	**PF0170**	136,9×51,6×19	OK012/ OK038						
1.1i	10/01→			BSC	+ESP	[-]	**PF0176**	136,9×57×19	OK012/ OK038						
1.4i	10/01→			BSC		[-]	**PF0170**	136,9×51,6×19	OK012/ OK038						
1.4i	10/01→			BSC	+ESP	[-]	**PF0176**	136,9×57×19	OK012/ OK038						
1.6i	10/01→			BSC		[-]	**PF0170**	136,9×51,6×19	OK012/ OK038						
1.6i	10/01→			BSC	+ESP	[-]	**PF0176**	136,9×57×19	OK012/ OK038						
1.9 d.	10/01→			BSC		[-]	**PF0170**	136,9×51,6×19	OK012/ OK038						
1.9 d.	10/01→			BSC	+ESP	[-]	**PF0176**	136,9×57×19	OK012/ OK038						
2.0 Hdi	12/99→09/01			LG		[+]	**PF0786**	130×56,3×19	OK030						
2.0 Hdi	10/01→			BSC		[-]	**PF0170**	136,9×51,6×19	OK012/ OK038						
2.0 Hdi	10/01→			BSC	+ESP	[-]	**PF0176**	136,9×57×19	OK012/ OK038						
Berlingo Combi															
Combi 1.1i	96→09/01			LG		[+]	**PF0786**	130×56,3×19	OK030						
Combi 1.4i	96→09/01			LG		[+]	**PF0786**	130×56,3×19	OK030						
Combi 1.6i 16V	96→09/01			LG		[+]	**PF0786**	130×56,3×19	OK030						
Combi 1.8d	96→09/01			LG		[+]	**PF0786**	130×56,3×19	OK030						
Combi 1.9d	96→09/01			LG		[+]	**PF0786**	130×56,3×19	OK030						
Berlingo Multispace															
Multispace 1.4	96→09/01			LG		[+]	**PF0786**	130×56,3×19	OK030						
Multispace 1.9d	96→09/01			LG		[+]	**PF0786**	130×56,3×19	OK030						
Berlingo II (MF)															
1.4	11/02→10/05	53	72	BSC		[-]	**PF0170**	136,9×51,6×19	OK012/ OK038						
1.4	05/05→	54	73	BSC		[-]	**PF0170**	136,9×51,6×19	OK012/ OK038						
1.4 bivalent	11/02→	48	65	BSC		[-]	**PF0170**	136,9×51,6×19	OK012/ OK038						
1.4 bivalent	11/02→10/05	53	72	BSC		[-]	**PF0170**	136,9×51,6×19	OK012/ OK038						

		KW	CV	SiS	i	W.i.	MAGNETI MARELLI	W×H×Th (mm)	Extra kit [Opt]	SiS	i	W.i.	MAGNETI MARELLI	W×H×Th (mm)	Extra kit [Opt]
CITROËN															
Berlingo II (MF)															
1.4 GNC	11/02→	48	65	BSC		[-]	**PF0170**	136,9×51,6×19	OK012/ OK038						
1.4 i bivalent	04/03→	55	75	BSC		[-]	**PF0170**	136,9×51,6×19	OK012/ OK038						
1.6	11/02→	81	110	BSC		[-]	**PF0170**	136,9×51,6×19	OK012/ OK038						
1.6 16V	11/02→	81	110	BSC		[-]	**PF0170**	136,9×51,6×19	OK012/ OK038						
1.6 HDI 110	08/05→	80	109	BSC		[-]	**PF0170**	136,9×51,6×19	OK012/ OK038						
1.6 HDI 75	07/05→	55	75	BSC		[-]	**PF0170**	136,9×51,6×19	OK012/ OK038						
1.6 HDI 90	07/05→	66	90	BSC		[-]	**PF0170**	136,9×51,6×19	OK012/ OK038						
2.0 HDi	11/02→ 10/05	66	90	BSC		[-]	**PF0170**	136,9×51,6×19	OK012/ OK038						
2.0 HDi 4x4	11/02→ 10/05	66	90	BSC		[-]	**PF0170**	136,9×51,6×19	OK012/ OK038						
Electric	11/02→	27	37	BSC		[-]	**PF0170**	136,9×51,6×19	OK012/ OK038						
Berlingo III															
1.4	03/09→	55	75	ATE		[-]	**PF0169**	155,3×64,5×19,0		LG		[-]	**PF0171**	87,2×52,8×16,7	
1.6	04/08→	66	90	ATE		[-]	**PF0169**	155,3×64,5×19,0		LG		[-]	**PF0171**	87,2×52,8×16,7	
1.6	04/08→	80	109	ATE		[-]	**PF0169**	155,3×64,5×19,0		LG		[-]	**PF0171**	87,2×52,8×16,7	
1.6 HDi 110	04/08→	80	109	ATE		[-]	**PF0169**	155,3×64,5×19,0		LG		[-]	**PF0171**	87,2×52,8×16,7	
1.6 HDi 110	07/10→	82	112	ATE		[-]	**PF0169**	155,3×64,5×19,0		LG		[-]	**PF0171**	87,2×52,8×16,7	
1.6 HDi 75	04/08→	55	75	ATE		[-]	**PF0169**	155,3×64,5×19,0		LG		[-]	**PF0171**	87,2×52,8×16,7	
1.6 HDi 90	07/10→	68	92	ATE		[-]	**PF0169**	155,3×64,5×19,0		LG		[-]	**PF0171**	87,2×52,8×16,7	
1.6 HDi 90	04/08→	66	90	ATE		[-]	**PF0169**	155,3×64,5×19,0		LG		[-]	**PF0171**	87,2×52,8×16,7	
1.6 VTi 120	11/09→	88	120	ATE		[-]	**PF0169**	155,3×64,5×19,0		LG		[-]	**PF0171**	87,2×52,8×16,7	
1.6 VTi 95	07/10→	72	98	ATE		[-]	**PF0169**	155,3×64,5×19,0		LG		[-]	**PF0171**	87,2×52,8×16,7	
Berlingo Box III															
1.6	04/08→	66	90	ATE		[-]	**PF0169**	155,3×64,5×19,0		LG		[-]	**PF0171**	87,2×52,8×16,7	
1.6	04/08→	80	109	ATE		[-]	**PF0169**	155,3×64,5×19,0		LG		[-]	**PF0171**	87,2×52,8×16,7	
1.6 HDi 110	07/10→	82	112	ATE		[-]	**PF0169**	155,3×64,5×19,0		LG		[-]	**PF0171**	87,2×52,8×16,7	
1.6 HDi 110	04/08→	80	109	ATE		[-]	**PF0169**	155,3×64,5×19,0		LG		[-]	**PF0171**	87,2×52,8×16,7	
1.6 HDi 75	04/08→	55	75	ATE		[-]	**PF0169**	155,3×64,5×19,0		LG		[-]	**PF0171**	87,2×52,8×16,7	
1.6 HDi 90	07/10→	68	92	ATE		[-]	**PF0169**	155,3×64,5×19,0		LG		[-]	**PF0171**	87,2×52,8×16,7	
1.6 HDi 90	04/08→	66	90	ATE		[-]	**PF0169**	155,3×64,5×19,0		LG		[-]	**PF0171**	87,2×52,8×16,7	
1.6 VTi 120	11/09→	88	120	ATE		[-]	**PF0169**	155,3×64,5×19,0		LG		[-]	**PF0171**	87,2×52,8×16,7	
1.6 VTi 95	07/10→	72	98	ATE		[-]	**PF0169**	155,3×64,5×19,0		LG		[-]	**PF0171**	87,2×52,8×16,7	

		KW	CV	SiS	i	W.i.	MAGNETI MARELLI	W×H×Th (mm)	Extra kit [Opt]	SiS	i	W.i.	MAGNETI MARELLI	W×H×Th (mm)	Extra kit [Opt]
CITROËN															
C-Crosser (EP)															
2.0	11/10→	108	147	AK		[+]	**PF0496**	150×59×15,4		AK		[+]	**PF0340**	91×44,8 ×15,4	
2.0 All-wheel Drive	11/10→	108	147	AK		[+]	**PF0496**	150×59×15,4		AK		[+]	**PF0340**	91×44,8 ×15,4	
2.2 HDi	02/07→	115	156	AK		[+]	**PF0496**	150×59×15,4		AK		[+]	**PF0340**	91×44,8 ×15,4	
2.4 16V	08/08→	125	170	AK		[+]	**PF0496**	150×59×15,4		AK		[+]	**PF0340**	91×44,8 ×15,4	
C-Crosser Enterprise															
2.2 HDi	01/09→	115	156	AK		[+]	**PF0496**	150×59×15,4		AK		[+]	**PF0340**	91×44,8 ×15,4	
2.4 16V	01/09→	125	170	AK		[+]	**PF0496**	150×59×15,4		AK		[+]	**PF0340**	91×44,8 ×15,4	
C-Elysee															
1.2 VTi 72	11/12→	53	72	BSC		[-]	**PF0174**	136,9×51,6×19	OK012						
1.6 HDI 92	11/12→	68	92	BSC		[-]	**PF0174**	136,9×51,6×19	OK012						
1.6 VTi 115	11/12→	85	115	BSC		[-]	**PF0174**	136,9×51,6×19	OK012						
C1 (PM_, PN_)															
1.0	06/05→	50	68	BSC		[-]	**PF0172**	122,9×46,9×17,6	OK012						
1.4 HDi	06/05→	40	54	BSC		[-]	**PF0172**	122,9×46,9×17,6	OK012						
C2 (JM_)															
1.1	09/03→	44	60	LG		[-]	**PF0173**	122,8×53×19	OK032/ OK061						
1.4	09/03→	54	73	LG		[-]	**PF0173**	122,8×53×19	OK032/ OK061	LG		[-]	**PF0131**	87×53×17	OK039/ OK041
1.4	10/06→	55	75	LG		[-]	**PF0173**	122,8×53×19	OK032/ OK061	LG		[-]	**PF0131**	87×53×17	OK039/ OK041
1.4 16V	06/06→	65	90	LG		[-]	**PF0173**	122,8×53×19	OK032/ OK061	LG		[-]	**PF0131**	87×53×17	OK039/ OK041
1.4 HDi	09/03→	50	68	LG		[-]	**PF0173**	122,8×53×19	OK032/ OK061	LG		[-]	**PF0131**	87×53×17	OK039/ OK041
1.6	09/03→	80	109	LG		[-]	**PF0587**	128,9×56,2×19,3	OK032	LG		[-]	**PF0131**	87×53×17	OK039/ OK041
1.6 HDi	09/05→	80	109	LG		[-]	**PF0587**	128,9×56,2×19,3	OK032	LG		[-]	**PF0131**	87×53×17	OK039/ OK041
1.6 VTS	01/05→	90	122	BSC		[-]	**PF0170**	136,9×51,6×19	OK012/ OK038	LG		[-]	**PF0131**	87×53×17	OK039/ OK041
C3 (FC_)															
1.1 i	02/02→	44	60	LG		[-]	**PF0173**	122,8×53×19	OK032/ OK061	LG		[-]	**PF0131**	87×53×17	OK039/ OK041
1.4 i	02/02→	54	73	LG		[-]	**PF0173**	122,8×53×19	OK032/ OK061						
1.4 i Bivalent	02/02→	54	73	LG		[-]	**PF0173**	122,8×53×19	OK032/ OK061						
1.4 Flex	12/05→	58	79	LG		[-]	**PF0173**	122,8×53×19	OK032/ OK061						
1.4 Bioflex	01/09→	60	82	LG		[-]	**PF0173**	122,8×53×19	OK032/ OK061						

		KW	CV													
				SiS	i	W.i.	MAGNETI MARELLI	W×H×Th (mm)	Extra kit [Opt]	SiS	i	W.i.	MAGNETI MARELLI	W×H×Th (mm)	Extra kit [Opt]
CITROËN																
C3 (FC_)																
1.4 16V	12/03→	65	88	LG		[-]	**PF0173**	122,8×53×19	OK032/ OK061							
1.4 HDi	02/02→	50	68	LG		[-]	**PF0173**	122,8×53×19	OK032/ OK061	LG		[-]	**PF0131**	87×53×17	OK039/ OK041
1.4 HDi	07/03→	52	70	LG		[-]	**PF0173**	122,8×53×19	OK032/ OK061	LG		[-]	**PF0131**	87×53×17	OK039/ OK041
1.4 HDi	05/05→	55	75	LG		[-]	**PF0173**	122,8×53×19	OK032/ OK061	LG		[-]	**PF0131**	87×53×17	OK039/ OK041
1.4 16V HDi	02/02→	66	90	LG		[-]	**PF0587**	128,9×56,2×19,3	OK032	LG		[-]	**PF0131**	87×53×17	OK039/ OK041
1.6 Bioflex	06/05→	83	113	LG		[-]	**PF0587**	128,9×56,2×19,3	OK032	LG		[-]	**PF0131**	87×53×17	OK039/ OK041
1.6 16V	02/02→	80	109	BSC		[-]	**PF0176**	136,9×57×19	OK012/ OK038						
1.6 16V HDi	09/05→	80	109	BSC		[-]	**PF0176**	136,9×57×19	OK012/ OK038						
C3 II																
1.1	11/09→	44	60	LG		[-]	**PF0173**	122,8×53×19	OK032/ OK061						
1.1 BiFuel	11/10→	44	60	LG		[-]	**PF0173**	122,8×53×19	OK032/ OK061						
1.4	11/09→	54	73	LG		[-]	**PF0173**	122,8×53×19	OK032/ OK061						
1.4 Flex	11/09→	58	80	LG		[-]	**PF0173**	122,8×53×19	OK032/ OK061						
1.4 HDi 70	11/09→	50	68	LG		[-]	**PF0587**	128,9×56,2×19,3	OK032						
1.4 VTi 95	11/09→	70	95	LG		[-]	**PF0587**	128,9×56,2×19,3	OK032						
1.6 Flex	11/09→	81	110	BSC		[-]	**PF0176**	136,9×57×19	OK012/ OK038	LG		[-]	**PF0131**	87×53×17	OK039/ OK041
1.6 HDi	11/09→	68	92	BSC		[-]	**PF0176**	136,9×57×19	OK012/ OK038	LG		[-]	**PF0131**	87×53×17	OK039/ OK041
1.6 HDi 110	11/09→	82	112	BSC		[-]	**PF0176**	136,9×57×19	OK012/ OK038	LG		[-]	**PF0131**	87×53×17	OK039/ OK041
1.6 HDi 90	11/09→	66	90	BSC		[-]	**PF0176**	136,9×57×19	OK012/ OK038	LG		[-]	**PF0131**	87×53×17	OK039/ OK041
1.6 VTi 120	11/09→	88	120	BSC		[-]	**PF0176**	136,9×57×19	OK012/ OK038	LG		[-]	**PF0131**	87×53×17	OK039/ OK041
C3 Picasso																
1.4 VTi 95	02/09→	70	95	BSC	Ø Disc 266	[-]	**PF0170**	136,9×51,6×19	OK012/ OK038	LG		[-]	**PF0131**	87×53×17	OK039/ OK041
1.6 VTi 120	02/09→	88	120	BSC	Ø Disc 266	[-]	**PF0170**	136,9×51,6×19	OK012/ OK038	LG		[-]	**PF0131**	87×53×17	OK039/ OK041
1.6 VTi 120	02/09→	88	120	BSC	Ø Disc 283	[-]	**PF0697**	136,7×59,3×18,5	OK033/ OK079	LG		[-]	**PF0131**	87×53×17	OK039/ OK041

		KW	CV														
				SiS	i	W.i.	MAGNETI MARELLI	W×H×Th (mm)	Extra kit [Opt]	SiS	i	W.i.	MAGNETI MARELLI	W×H×Th (mm)	Extra kit [Opt]
CITROËN															
C3 Picasso															
1.6 Flex	11/09→	78	107	BSC	Ø Disc 266	[-]	**PF0170**	136,9×51,6×19	OK012/ OK038	LG		[-]	**PF0131**	87×53×17	OK039/ OK041
1.6 Flex	11/09→	78	107	BSC	Ø Disc 283	[-]	**PF0697**	136,7×59,3×18,5	OK033/ OK079	LG		[-]	**PF0131**	87×53×17	OK039/ OK041
1.6 Flex	05/11→	81	110	BSC	Ø Disc 266	[-]	**PF0170**	136,9×51,6×19	OK012/ OK038	LG		[-]	**PF0131**	87×53×17	OK039/ OK041
1.6 Flex	05/11→	81	110	BSC	Ø Disc 283	[-]	**PF0697**	136,7×59,3×18,5	OK033/ OK079	LG		[-]	**PF0131**	87×53×17	OK039/ OK041
1.6 HDi	02/09→	66	90	BSC	Ø Disc 266	[-]	**PF0170**	136,9×51,6×19	OK012/ OK038	LG		[-]	**PF0131**	87×53×17	OK039/ OK041
1.6 HDi	02/09→	66	90	BSC	Ø Disc 283	[-]	**PF0697**	136,7×59,3×18,5	OK033/ OK079	LG		[-]	**PF0131**	87×53×17	OK039/ OK041
1.6 HDi	02/09→	80	109	BSC	Ø Disc 266	[-]	**PF0170**	136,9×51,6×19	OK012/ OK038	LG		[-]	**PF0131**	87×53×17	OK039/ OK041
1.6 HDi	02/09→	80	109	BSC	Ø Disc 283	[-]	**PF0697**	136,7×59,3×18,5	OK033/ OK079	LG		[-]	**PF0131**	87×53×17	OK039/ OK041
1.6 HDi 110	05/10→	82	112	BSC	Ø Disc 266	[-]	**PF0170**	136,9×51,6×19	OK012/ OK038	LG		[-]	**PF0131**	87×53×17	OK039/ OK041
1.6 HDi 110	05/10→	82	112	BSC	Ø Disc 283	[-]	**PF0697**	136,7×59,3×18,5	OK033/ OK079	LG		[-]	**PF0131**	87×53×17	OK039/ OK041
1.6 HDI 90	07/10→	68	92	BSC	Ø Disc 266	[-]	**PF0170**	136,9×51,6×19	OK012/ OK038	LG		[-]	**PF0131**	87×53×17	OK039/ OK041
1.6 HDI 90	07/10→	68	92	BSC	Ø Disc 283	[-]	**PF0697**	136,7×59,3×18,5	OK033/ OK079	LG		[-]	**PF0131**	87×53×17	OK039/ OK041
C3 Pluriel (HB_)															
1.4	05/03→	54	73	LG		[-]	**PF0587**	128,9×56,2×19,3	OK032						
1.4 HDi	04/04→	50	68	LG		[-]	**PF0587**	128,9×56,2×19,3	OK032						
1.4 Hybrid	05/05→	54	73	LG		[-]	**PF0587**	128,9×56,2×19,3	OK032						
1.6	05/03→	80	109	LG		[-]	**PF0587**	128,9×56,2×19,3	OK032						
C3 XTR															
1.4 Hdi	04→			LG		[-]	**PF0587**	128,9×56,2×19,3	OK032	LG		[-]	**PF0131**	87×53×17	OK039/ OK041
1.4 Hdi City Suv	04→			LG		[-]	**PF0587**	128,9×56,2×19,3	OK032	LG		[-]	**PF0131**	87×53×17	OK039/ OK041
C4 (LC)															
1.4 16V	05→			BSC	-ESP	[-]	**PF0170**	136,9×51,6×19	OK012	LG		[-]	**PF0131**	87×53×17	OK039/ OK041
1.4 16V	05→			BSC	-ESP	[-]	**PF0170**	136,9×51,6×19	OK012/ OK038	BSC		[-]	**PF0179**	95×46,9×17,6	OK012/ OK040
1.6 16V	05→			BSC	-ESP	[-]	**PF0170**	136,9×51,6×19	OK012	LG		[-]	**PF0131**	87×53×17	OK039/ OK041
1.6 16V	05→			BSC	-ESP	[-]	**PF0170**	136,9×51,6×19	OK012/ OK038	BSC		[-]	**PF0179**	95×46,9×17,6	OK012/ OK040

		KW	CV	SiS	i	W.i.	MAGNETI MARELLI	W×H×Th (mm)	Extra kit [Opt]	SiS	i	W.i.	MAGNETI MARELLI	W×H×Th (mm)	Extra kit [Opt]
CITROËN															
C4 (LC)															
1.6 16V	05→			BSC	+ESP	[-]	**PF0176**	136,9×57×19	OK012	LG		[-]	**PF0131**	87×53×17	OK039/ OK041
1.6 16V	05→			BSC	+ESP	[-]	**PF0176**	136,9×57×19	OK012/ OK038	BSC		[-]	**PF0179**	95×46,9×17,6	OK012/ OK040
1.6 16V Hdi	05→			BSC	-ESP	[-]	**PF0170**	136,9×51,6×19	OK012	LG		[-]	**PF0131**	87×53×17	OK039/ OK041
1.6 16V Hdi	05→			BSC	-ESP	[-]	**PF0170**	136,9×51,6×19	OK012/ OK038	BSC		[-]	**PF0179**	95×46,9×17,6	OK012/ OK040
1.6 16V Hdi	05→			BSC	+ESP	[-]	**PF0176**	136,9×57×19	OK012	LG		[-]	**PF0131**	87×53×17	OK039/ OK041
1.6 16V Hdi	05→			BSC	+ESP	[-]	**PF0176**	136,9×57×19	OK012/ OK038	BSC		[-]	**PF0179**	95×46,9×17,6	OK012/ OK040
1.6 16V Hdi	05→		110	BSC	+ESP	[-]	**PF0176**	136,9×57×19	OK012	LG		[-]	**PF0131**	87×53×17	OK039/ OK041
1.6 16V Hdi	05→		110	BSC	+ESP	[-]	**PF0176**	136,9×57×19	OK012/ OK038	BSC		[-]	**PF0179**	95×46,9×17,6	OK012/ OK040
2.0 16V	05→			BSC	+ESP	[-]	**PF0176**	136,9×57×19	OK012	LG		[-]	**PF0131**	87×53×17	OK039/ OK041
2.0 16V	05→			BSC	+ESP	[-]	**PF0176**	136,9×57×19	OK012/ OK038	BSC		[-]	**PF0179**	95×46,9×17,6	OK012/ OK040
2.0 16V Hdi	05→			ATE	+ESP	[-]	**PF0178**	155,1×66×18,8		LG		[-]	**PF0131**	87×53×17	OK039/ OK041
2.0 16V Hdi	05→			ATE	+ESP	[-]	**PF0178**	155,1×66×18,8		BSC		[-]	**PF0179**	95×46,9×17,6	OK012/ OK040
C4 (B7)															
1.4 VTi 95	11/09→	70	95	ATE	+HB el.	[-]	**PF0169**	155,3×64,5×19,0		LG	+HB el.	[-]	**PF0754**	103,8×55,9×17,3	OK039
1.4 VTi 95	11/09→	70	95	TRW		[-]	**PF0753**	129×53×18,5	OK088	LG		[-]	**PF0432**	87×53×16	OK039
1.6 Flex	11/09→	81	110	ATE	+HB el.	[-]	**PF0169**	155,3×64,5×19,0		LG	+HB el.	[-]	**PF0754**	103,8×55,9×17,3	OK039
1.6 Flex	11/09→	81	110	ATE		[-]	**PF0169**	155,3×64,5×19,0		LG		[-]	**PF0432**	87×53×16	OK039
1.6 HDi 110	11/09→	82	112	ATE	+HB el.	[-]	**PF0169**	155,3×64,5×19,0		LG	+HB el.	[-]	**PF0754**	103,8×55,9×17,3	OK039
1.6 HDi 110	11/09→	82	112	ATE		[-]	**PF0169**	155,3×64,5×19,0		LG		[-]	**PF0432**	87×53×16	OK039
1.6 HDi 90	11/09→	68	92	ATE	+HB el.	[-]	**PF0169**	155,3×64,5×19,0		LG	+HB el.	[-]	**PF0754**	103,8×55,9×17,3	OK039
1.6 HDi 90	11/09→	68	92	TRW		[-]	**PF0753**	129×53×18,5	OK088	LG		[-]	**PF0432**	87×53×16	OK039
1.6 THP 155	11/09→	115	156	ATE	+HB el.	[-]	**PF0169**	155,3×64,5×19,0		LG	+HB el.	[-]	**PF0754**	103,8×55,9×17,3	OK039
1.6 THP 155	11/09→	115	156	ATE		[-]	**PF0169**	155,3×64,5×19,0		LG		[-]	**PF0432**	87×53×16	OK039
1.6 VTi 120	11/09→	88	120	ATE	+HB el.	[-]	**PF0169**	155,3×64,5×19,0		LG	+HB el.	[-]	**PF0754**	103,8×55,9×17,3	OK039
1.6 VTi 120	11/09→	88	120	ATE		[-]	**PF0169**	155,3×64,5×19,0		LG		[-]	**PF0432**	87×53×16	OK039
2.0 Flex	11/09→	103	140	ATE	+HB el.	[-]	**PF0169**	155,3×64,5×19,0		LG	+HB el.	[-]	**PF0754**	103,8×55,9×17,3	OK039
2.0 Flex	11/09→	103	140	ATE		[-]	**PF0169**	155,3×64,5×19,0		LG		[-]	**PF0432**	87×53×16	OK039
2.0 HDi 150	11/09→	110	150	ATE	+HB el.	[-]	**PF0169**	155,3×64,5×19,0		LG	+HB el.	[-]	**PF0754**	103,8×55,9×17,3	OK039
2.0 HDi 150	11/09→	110	150	ATE		[-]	**PF0169**	155,3×64,5×19,0		LG		[-]	**PF0432**	87×53×16	OK039

		KW	CV	SiS	i	W.i.	MAGNETI MARELLI	W×H×Th (mm)	Extra kit [Opt]	SiS	i	W.i.	MAGNETI MARELLI	W×H×Th (mm)	Extra kit [Opt]
CITROËN															
C4 Aircross															
1.6	04/12→	86	117	ST		[+]	**PF0338**	144,9×54,9×15,6		AK		[+]	**PF0678**	101,5×44,4×14,3	
1.6	07/12→	85	115	ST		[+]	**PF0338**	144,9×54,9×15,6		AK		[+]	**PF0678**	101,5×44,4×14,3	
1.6 Flex	07/12→	90	122	ST		[+]	**PF0338**	144,9×54,9×15,6		AK		[+]	**PF0678**	101,5×44,4×14,3	
HDi 115	04/12→	84	114	ST		[+]	**PF0338**	144,9×54,9×15,6		AK		[+]	**PF0678**	101,5×44,4×14,3	
HDi 150	04/12→	110	150	ST		[+]	**PF0338**	144,9×54,9×15,6		AK		[+]	**PF0678**	101,5×44,4×14,3	
2.0	04/12→	110	150	ST		[+]	**PF0338**	144,9×54,9×15,6		AK		[+]	**PF0678**	101,5×44,4×14,3	
C4 Cactus															
1.2 VTi 82	09/14→	60	82							LG	Ø Disc 249×9	[-]	**PF0432**	87×53×16	OK039
1.2 VTi 82	09/14→	60	82	BSC	Ø Disc 266×22	[-]	**PF0174**	136,9×51,6×19	OK012	LG	Ø Disc 249×9	[-]	**PF0432**	87×53×16	OK039
1.6 HDi 90	09/14→	68	92							LG	Ø Disc 249×9	[-]	**PF0432**	87×53×16	OK039
1.6 HDi 90	09/14→	68	92	BSC	Ø Disc 266×22	[-]	**PF0174**	136,9×51,6×19	OK012	LG	Ø Disc 249×9	[-]	**PF0432**	87×53×16	OK039
C4 Coupé															
1.4 16V	05→			BSC		[-]	**PF0170**	136,9×51,6×19	OK012	LG		[-]	**PF0131**	87×53×17	OK039/ OK041
1.4 16V	05→			BSC		[-]	**PF0170**	136,9×51,6×19	OK012/ OK038	BSC		[-]	**PF0179**	95×46,9×17,6	OK012/ OK040
1.6 16V	05→			BSC		[-]	**PF0170**	136,9×51,6×19	OK012	LG		[-]	**PF0131**	87×53×17	OK039/ OK041
1.6 16V	05→			BSC		[-]	**PF0170**	136,9×51,6×19	OK012/ OK038	BSC		[-]	**PF0179**	95×46,9×17,6	OK012/ OK040
1.6 16V	05→			BSC		[-]	**PF0176**	136,9×57×19	OK012	LG		[-]	**PF0131**	87×53×17	OK039/ OK041
1.6 16V	05→			BSC		[-]	**PF0176**	136,9×57×19	OK012/ OK038	BSC		[-]	**PF0179**	95×46,9×17,6	OK012/ OK040
1.6 16V Hdi	05→			BSC		[-]	**PF0170**	136,9×51,6×19	OK012	LG		[-]	**PF0131**	87×53×17	OK039/ OK041
1.6 16V Hdi	05→			BSC		[-]	**PF0170**	136,9×51,6×19	OK012/ OK038	BSC		[-]	**PF0179**	95×46,9×17,6	OK012/ OK040
1.6 16V Hdi	05→			BSC		[-]	**PF0176**	136,9×57×19	OK012	LG		[-]	**PF0131**	87×53×17	OK039/ OK041
1.6 16V Hdi	05→			BSC		[-]	**PF0176**	136,9×57×19	OK012/ OK038	BSC		[-]	**PF0179**	95×46,9×17,6	OK012/ OK040
1.6 16V Hdi	05→			BSC		[-]	**PF0176**	136,9×57×19	OK012	LG		[-]	**PF0131**	87×53×17	OK039/ OK041
1.6 16V Hdi	05→			BSC		[-]	**PF0176**	136,9×57×19	OK012/ OK038	BSC		[-]	**PF0179**	95×46,9×17,6	OK012/ OK040
2.0 16V	05→			BSC		[-]	**PF0176**	136,9×57×19	OK012	LG		[-]	**PF0131**	87×53×17	OK039/ OK041
2.0 16V	05→			BSC		[-]	**PF0176**	136,9×57×19	OK012/ OK038	BSC		[-]	**PF0179**	95×46,9×17,6	OK012/ OK040

		KW	CV												
				SiS	i	W.i.	MAGNETI MARELLI	W×H×Th (mm)	Extra kit [Opt]	SiS	i	W.i.	MAGNETI MARELLI	W×H×Th (mm)	Extra kit [Opt]
CITROËN															
C4 Coupé															
2.0 16V	05→			ATE		[-]	**PF0178**	155,1×66×18,8		LG		[-]	**PF0131**	87×53×17	OK039/ OK041
2.0 16V	05→			ATE		[-]	**PF0178**	155,1×66×18,8		BSC		[-]	**PF0179**	95×46,9×17,6	OK012/ OK040
2.0 16V Hdi	05→			BSC		[-]	**PF0176**	136,9×57×19	OK012	LG		[-]	**PF0131**	87×53×17	OK039/ OK041
2.0 16V Hdi	05→			BSC		[-]	**PF0176**	136,9×57×19	OK012/ OK038	BSC		[-]	**PF0179**	95×46,9×17,6	OK012/ OK040
C4 Picasso															
1.6 16V Hdi	06→			ATE		[-]	**PF0169**	155,3×64,5×19,0		BSC		[-]	**PF0177**	102,3×48,3×16,4	OK012/ OK074/ OK040
1.8	06→			ATE		[-]	**PF0169**	155,3×64,5×19,0		BSC		[-]	**PF0177**	102,3×48,3×16,4	OK012/ OK074/ OK040
2.0 16V	06→			ATE		[-]	**PF0169**	155,3×64,5×19,0		BSC		[-]	**PF0177**	102,3×48,3×16,4	OK012/ OK074/ OK040
2.0 16V Hdi	06→			ATE		[-]	**PF0169**	155,3×64,5×19,0		BSC		[-]	**PF0177**	102,3×48,3×16,4	OK012/ OK074/ OK040
C4 Grand Picasso (UA)															
1.6 16V	07/08→	103	140	ATE		[-]	**PF0644**	155,3×71,9×18,2		BSC		[-]	**PF0177**	102,3×48,3×16,4	OK012/ OK074/ OK040
1.6 16V	10/08→	110	150	ATE		[-]	**PF0644**	155,3×71,9×18,2		BSC		[-]	**PF0177**	102,3×48,3×16,4	OK012/ OK074/ OK040
1.6 e-HDi 110	09/10→	82	112	ATE		[-]	**PF0644**	155,3×71,9×18,2		BSC		[-]	**PF0177**	102,3×48,3×16,4	OK012/ OK074/ OK040
1.6 HDi	10/06→	80	109	ATE		[-]	**PF0644**	155,3×71,9×18,2		BSC		[-]	**PF0177**	102,3×48,3×16,4	OK012/ OK074/ OK040
1.6 HDi 110	09/10→	82	112	ATE		[-]	**PF0644**	155,3×71,9×18,2		BSC		[-]	**PF0177**	102,3×48,3×16,4	OK012/ OK074/ OK040
1.6 THP 155	09/10→	115	156	ATE		[-]	**PF0644**	155,3×71,9×18,2		BSC		[-]	**PF0177**	102,3×48,3×16,4	OK012/ OK074/ OK040
1.6 VTi 120	07/08→	88	120	ATE		[-]	**PF0644**	155,3×71,9×18,2		BSC		[-]	**PF0177**	102,3×48,3×16,4	OK012/ OK074/ OK040

		KW	CV													
				SiS	i	W.i.	MAGNETI MARELLI	W×H×Th (mm)	Extra kit [Opt]	SiS	i	W.i.	MAGNETI MARELLI	W×H×Th (mm)	Extra kit [Opt]
CITROËN															
C4 Grand Picasso (UA)															
1.8 i 16V	10/06→	92	125	ATE		[-]	**PF0644**	155,3×71,9×18,2		BSC		[-]	**PF0177**	102,3×48,3×16,4	OK012/ OK074/ OK040
2.0 HDi	10/06→	100	136	ATE		[-]	**PF0644**	155,3×71,9×18,2		BSC		[-]	**PF0177**	102,3×48,3×16,4	OK012/ OK074/ OK040
2.0 HDi 150	07/09→	110	150	ATE		[-]	**PF0644**	155,3×71,9×18,2		BSC		[-]	**PF0177**	102,3×48,3×16,4	OK012/ OK074/ OK040
2.0 HDi 165	09/10→	120	163	ATE		[-]	**PF0644**	155,3×71,9×18,2		BSC		[-]	**PF0177**	102,3×48,3×16,4	OK012/ OK074/ OK040
2.0 i 16V	10/06→	103	140	ATE		[-]	**PF0644**	155,3×71,9×18,2		BSC		[-]	**PF0177**	102,3×48,3×16,4	OK012/ OK074/ OK040
C5 (DC_)															
1.8 16V	03/01→08/04	85	115	BSC	(DC6FZB, DC6FZE)	[+]	**PF0565**	148,8×49,5×17,5	OK012	CT		[-]	**PF0180**	73×70,8×14,8	
2.0 16V	03/01→08/04	100	136	BSC	(DCRFNC, DCRFNF)	[+]	**PF0181**	148,8×59×17,8	OK012	CT		[-]	**PF0180**	73×70,8×14,8	
2.0 16V Hpi	03/01→08/04	103	140	BSC	(DCRLZB)	[+]	**PF0181**	148,8×59×17,8	OK012	CT		[-]	**PF0180**	73×70,8×14,8	
2.0 HDi	03/01→08/04	79	107	BSC		[+]	**PF0181**	148,8×59×17,8	OK012	CT		[-]	**PF0180**	73×70,8×14,8	
2.0 Hdi	03/01→08/04	66	90	BSC	(DCRHYB)	[+]	**PF0181**	148,8×59×17,8	OK012	CT		[-]	**PF0180**	73×70,8×14,8	
2.0 Hdi	03/01→08/04	80	109	BSC	(DCRHZB, DCRHZE)	[+]	**PF0181**	148,8×59×17,8	OK012	CT		[-]	**PF0180**	73×70,8×14,8	
2.2 Hdi	03/01→08/04	98	133	BSC	(DC4HXB, DC4HXE)	[+]	**PF0564**	168×61,3×17,8	OK012	CT		[-]	**PF0180**	73×70,8×14,8	
3.0 Carlsson HP	08/01→08/04	173	235	BSC		[+]	**PF0564**	168×61,3×17,8	OK012	CT		[-]	**PF0180**	73×70,8×14,8	
3.0 V6	03/01→08/04	152	207	BSC	(DCXFXC, DCXFXF)	[+]	**PF0564**	168×61,3×17,8	OK012	CT		[-]	**PF0180**	73×70,8×14,8	
C5 (DC_) MY04															
1.6 Hdi	09/04→	80	109	BSC	(RC8HZB)	[+]	**PF0565**	148,8×49,5×17,5	OK012	CT		[-]	**PF0180**	73×70,8×14,8	
1.8 16V	09/05→	92	125	BSC		[+]	**PF0565**	148,8×49,5×17,5	OK012	CT		[-]	**PF0180**	73×70,8×14,8	
1.8 16V	09/04→	85	116	BSC	(RC6FZB)	[+]	**PF0565**	148,8×49,5×17,5	OK012	CT		[-]	**PF0180**	73×70,8×14,8	
2.0 16V	09/04→	103	140	BSC	(RCRFJB, RCRFJC)	[+]	**PF0181**	148,8×59×17,8	OK012	CT		[-]	**PF0180**	73×70,8×14,8	
2.0 Hdi	09/04→	100	136	BSC	(RCRHRH)	[+]	**PF0181**	148,8×59×17,8	OK012	CT		[-]	**PF0180**	73×70,8×14,8	
2.2 HDi	04/06→	125	170	BSC		[+]	**PF0564**	168×61,3×17,8	OK012	CT		[-]	**PF0180**	73×70,8×14,8	
2.2 Hdi	09/04→	98	133	BSC	(RC4HXE)	[+]	**PF0564**	168×61,3×17,8	OK012	CT		[-]	**PF0180**	73×70,8×14,8	
3.0 Carlsson HP	09/04→	173	235	BSC		[+]	**PF0564**	168×61,3×17,8	OK012	CT		[-]	**PF0180**	73×70,8×14,8	
3.0 V6	09/04→	152	207	BSC	(RCXFUF)	[+]	**PF0564**	168×61,3×17,8	OK012	CT		[-]	**PF0180**	73×70,8×14,8	

		KW	CV												
				SiS	i	W.i.	MAGNETI MARELLI	W×H×Th (mm)	Extra kit [Opt]	SiS	i	W.i.	MAGNETI MARELLI	W×H×Th (mm)	Extra kit [Opt]
CITROËN															
C5 Break (DE_)															
1.8 16V	06/01 → 08/04	85	115	BSC	(DE6FZB, DE6FZE)	[+]	**PF0565**	148,8×49,5×17,5	OK012	CT		[-]	**PF0180**	73×70,8×14,8	
2.0 16V	06/01 → 08/04	100	136	BSC	(DERFNF, DERFNC, RERFNC)	[+]	**PF0181**	148,8×59×17,8	OK012	CT		[-]	**PF0180**	73×70,8×14,8	
2.0 16V Hpi	06/01 → 08/04	103	140	BSC	(DERLZB)	[+]	**PF0181**	148,8×59×17,8	OK012	CT		[-]	**PF0180**	73×70,8×14,8	
2.0 HDi	06/01 → 08/04	80	109	BSC		[+]	**PF0181**	148,8×59×17,8	OK012	CT		[-]	**PF0180**	73×70,8×14,8	
2.0 Hdi	06/01 → 08/04	79	107	BSC	(DERHSB, DERHSE)	[+]	**PF0181**	148,8×59×17,8	OK012	CT		[-]	**PF0180**	73×70,8×14,8	
2.0 Hdi	06/01 → 08/04	66	90	BSC	(DERHYB)	[+]	**PF0181**	148,8×59×17,8	OK012	CT		[-]	**PF0180**	73×70,8×14,8	
2.2 Hdi	06/01 → 08/04	98	133	BSC	(DE4HXB, DE4HXE)	[+]	**PF0564**	168×61,3×17,8	OK012	CT		[-]	**PF0180**	73×70,8×14,8	
3.0 Carlsson	09/03 → 08/04	173	235	BSC		[+]	**PF0564**	168×61,3×17,8	OK012	CT		[-]	**PF0180**	73×70,8×14,8	
3.0 V6	06/01 → 08/04	152	207	BSC	(DEXFXC, DEXFXF)	[+]	**PF0564**	168×61,3×17,8	OK012	CT		[-]	**PF0180**	73×70,8×14,8	
C5 Break (RE_) MY04															
1.6 Hdi	09/04 →	80	109	BSC	(RE8HZB)	[+]	**PF0565**	148,8×49,5×17,5	OK012	CT		[-]	**PF0180**	73×70,8×14,8	
1.8 16V	09/05 →	92	125	BSC		[+]	**PF0565**	148,8×49,5×17,5	OK012	CT		[-]	**PF0180**	73×70,8×14,8	
1.8 16V	09/04 →	85	116	BSC	(RE6FZB)	[+]	**PF0565**	148,8×49,5×17,5	OK012	CT		[-]	**PF0180**	73×70,8×14,8	
2.0 16V	09/04 →	103	140	BSC	(RERFJB, RERFJC)	[+]	**PF0181**	148,8×59×17,8	OK012	CT		[-]	**PF0180**	73×70,8×14,8	
2.0 Hdi	09/04 →	100	136	BSC	(RERHRH)	[+]	**PF0181**	148,8×59×17,8	OK012	CT		[-]	**PF0180**	73×70,8×14,8	
2.2 HDi	04/06 →	125	170	BSC		[+]	**PF0564**	168×61,3×17,8	OK012	CT		[-]	**PF0180**	73×70,8×14,8	
2.2 Hdi	09/04 →	98	133	BSC	(RE4HXE)	[+]	**PF0564**	168×61,3×17,8	OK012	CT		[-]	**PF0180**	73×70,8×14,8	
3.0	09/04 →	173	235	BSC		[+]	**PF0564**	168×61,3×17,8	OK012	CT		[-]	**PF0180**	73×70,8×14,8	
3.0 V6	09/04 →	152	207	BSC	(REXFUF)	[+]	**PF0564**	168×61,3×17,8	OK012	CT		[-]	**PF0180**	73×70,8×14,8	
C5 III Berlina (RD)															
1.6 Hdi	02/08 →			ATE		[o]	**PF0667**	155,2×66,6×18		ATE		[-]	**PF0243**	123,1×52×16,4	
1.6 Hdi	02/08 →			ATE		[+]	**PF0668**	155,2×66,6×18		ATE		[-]	**PF0243**	123,1×52×16,4	
1.8 16V	02/08 →			ATE		[o]	**PF0667**	155,2×66,6×18		ATE		[-]	**PF0243**	123,1×52×16,4	
1.8 16V	02/08 →			ATE		[+]	**PF0668**	155,2×66,6×18		ATE		[-]	**PF0243**	123,1×52×16,4	
2.0 16V	02/08 →			ATE		[o]	**PF0667**	155,2×66,6×18		ATE		[-]	**PF0243**	123,1×52×16,4	
2.0 16V	02/08 →			ATE		[+]	**PF0668**	155,2×66,6×18		ATE		[-]	**PF0243**	123,1×52×16,4	
2.0 Hdi	02/08 →			ATE		[o]	**PF0667**	155,2×66,6×18		ATE		[-]	**PF0243**	123,1×52×16,4	
2.0 Hdi	02/08 →			ATE		[+]	**PF0668**	155,2×66,6×18		ATE		[-]	**PF0243**	123,1×52×16,4	
2.2 Hdi	02/08 →			ATE		[o]	**PF0667**	155,2×66,6×18		ATE		[-]	**PF0243**	123,1×52×16,4	
2.2 Hdi	02/08 →			ATE		[+]	**PF0668**	155,2×66,6×18		ATE		[-]	**PF0243**	123,1×52×16,4	
2.7 Hdi	02/08 →			ATE		[o]	**PF0667**	155,2×66,6×18		ATE		[-]	**PF0243**	123,1×52×16,4	
2.7 Hdi	02/08 →			ATE		[+]	**PF0668**	155,2×66,6×18		ATE		[-]	**PF0243**	123,1×52×16,4	
3.0 V6	02/08 →			ATE		[o]	**PF0667**	155,2×66,6×18		ATE		[-]	**PF0243**	123,1×52×16,4	
3.0 V6	02/08 →			ATE		[+]	**PF0668**	155,2×66,6×18		ATE		[-]	**PF0243**	123,1×52×16,4	
3.0 Hdi	04/09 →		177							ATE		[-]	**PF0243**	123,1×52×16,4	




KW	CV	SiS	i	W.i.	MAGNETI MARELLI	W×H×Th (mm)	Extra kit [Opt]	SiS	i	W.i.	MAGNETI MARELLI	W×H×Th (mm)	Extra kit [Opt]

CITROËN

C5 III SW (TD)

1.6 Hdi	02/08→			ATE		[o]	PF0667	155,2×66,6×18		ATE		[-]	PF0243	123,1×52×16,4	
1.6 Hdi	02/08→			ATE		[+]	PF0668	155,2×66,6×18		ATE		[-]	PF0243	123,1×52×16,4	
1.8 16V	02/08→			ATE		[o]	PF0667	155,2×66,6×18		ATE		[-]	PF0243	123,1×52×16,4	
1.8 16V	02/08→			ATE		[+]	PF0668	155,2×66,6×18		ATE		[-]	PF0243	123,1×52×16,4	
2.0 16V	02/08→			ATE		[o]	PF0667	155,2×66,6×18		ATE		[-]	PF0243	123,1×52×16,4	
2.0 16V	02/08→			ATE		[+]	PF0668	155,2×66,6×18		ATE		[-]	PF0243	123,1×52×16,4	
2.0 Hdi	02/08→			ATE		[o]	PF0667	155,2×66,6×18		ATE		[-]	PF0243	123,1×52×16,4	
2.0 Hdi	02/08→			ATE		[+]	PF0668	155,2×66,6×18		ATE		[-]	PF0243	123,1×52×16,4	
2.2 Hdi	02/08→			ATE		[o]	PF0667	155,2×66,6×18		ATE		[-]	PF0243	123,1×52×16,4	
2.2 Hdi	02/08→			ATE		[+]	PF0668	155,2×66,6×18		ATE		[-]	PF0243	123,1×52×16,4	
2.7 Hdi	02/08→			ATE		[o]	PF0667	155,2×66,6×18		ATE		[-]	PF0243	123,1×52×16,4	
2.7 Hdi	02/08→			ATE		[+]	PF0668	155,2×66,6×18		ATE		[-]	PF0243	123,1×52×16,4	
3.0 V6	02/08→			ATE		[o]	PF0667	155,2×66,6×18		ATE		[-]	PF0243	123,1×52×16,4	
3.0 V6	02/08→			ATE		[+]	PF0668	155,2×66,6×18		ATE		[-]	PF0243	123,1×52×16,4	
3.0 Hdi	04/09→	177								ATE		[-]	PF0243	123,1×52×16,4	

C6 (TD)

2.2 HDi	06/06→	125	170	LG		[+]	PF0615	162,5×79,2×18,3	OK030/ OK089	LG		[-]	PF0616	86,3×57×18	OK039
2.7 HDi	09/05→	150	204	LG		[+]	PF0615	162,5×79,2×18,3	OK030/ OK089						
3.0 HDi	04/09→	177	241							LG		[-]	PF0616	86,3×57×18	OK039
3.0 V6	09/05→	155	211	LG		[+]	PF0615	162,5×79,2×18,3	OK030/ OK089						

C8 (EA_, EB_)

2.0	07/02→	100	136	LG		[+]	PF0182	146,7×60×19	OK037/ OK017	LG		[-]	PF0131	87×53×17	OK039/ OK041
2.0 16V	09/05→	104	141	LG		[+]	PF0182	146,7×60×19	OK037/ OK017	LG		[-]	PF0131	87×53×17	OK039/ OK041
2.0 16V	09/05→	103	140	LG		[+]	PF0182	146,7×60×19	OK037/ OK017	LG		[-]	PF0131	87×53×17	OK039/ OK041
2.0 HDi	07/02→	79	107	LG		[+]	PF0182	146,7×60×19	OK037/ OK017	LG		[-]	PF0131	87×53×17	OK039/ OK041
2.0 HDi	02/07→	88	120	LG		[+]	PF0182	146,7×60×19	OK037/ OK017	LG		[-]	PF0131	87×53×17	OK039/ OK041
2.0 HDi 135	03/06→	100	136	LG		[+]	PF0182	146,7×60×19	OK037/ OK017	LG		[-]	PF0131	87×53×17	OK039/ OK041
2.0 HDi 165	03/06→	120	163	LG		[+]	PF0182	146,7×60×19	OK037/ OK017	LG		[-]	PF0131	87×53×17	OK039/ OK041
2.2	07/02→	116	158	LG		[+]	PF0182	146,7×60×19	OK037/ OK017	LG		[-]	PF0131	87×53×17	OK039/ OK041
2.2 Hdi 16V	11/02→			LG		[+]	PF0182	146,7×60×19	OK037/ OK017	LG		[-]	PF0131	87×53×17	OK039/ OK041
2.2 HDi	09/07→									LG		[-]	PF0131	87×53×17	OK039/ OK041

		KW	CV	SiS	i	W.i.	MAGNETI MARELLI	W×H×Th (mm)	Extra kit [Opt]	SiS	i	W.i.	MAGNETI MARELLI	W×H×Th (mm)	Extra kit [Opt]
CITROËN															
C8 (EA_, EB_)															
3.0 V6	07/02→	150	204	BR		[+]	**PF0498**	131,8×77,3×15,8		LG		[-]	**PF0131**	87×53×17	OK039/ OK041
C15															
1.1	88→			LG		[+]	**PF0167**	90×62,8×17,5	OK030						
1.4	88→			LG		[+]	**PF0167**	90×62,8×17,5	OK030						
1.8 D	88→			LG		[+]	**PF0167**	90×62,8×17,5	OK030						
C22/C25															
C 22	81→90			LG		[+]	**PF0175**	130×71,2×19	OK032						
C 25	81→90			LG		[+]	**PF0175**	130×71,2×19	OK032						
DS3															
1.4 HDi 70	04/10→	50	68	BSC	Ø Disc 283	[-]	**PF0697**	136,7×59,3×18,5	OK033/ OK079	LG		[-]	**PF0131**	87×53×17	OK039/ OK041
1.4 HDi 70	04/10→	50	68	BSC	Ø Disc 266	[-]	**PF0174**	136,9×51,6×19	OK012/ OK038	LG		[-]	**PF0131**	87×53×17	OK039/ OK041
1.4 HDi 70	04/10→	50	68	BR	Ø Disc 323×28	[-]	**PF0555**	109,7×69,3×15		LG		[-]	**PF0131**	87×53×17	OK039/ OK041
1.4 VTi 95	04/10→	70	95	BSC	Ø Disc 283	[-]	**PF0697**	136,7×59,3×18,5	OK033/ OK079	LG		[-]	**PF0131**	87×53×17	OK039/ OK041
1.4 VTi 95	04/10→	70	95	BR	Ø Disc 323×28	[-]	**PF0555**	109,7×69,3×15		LG		[-]	**PF0131**	87×53×17	OK039/ OK041
1.6 HDi 110	11/09→	82	112	BSC	Ø Disc 283	[-]	**PF0697**	136,7×59,3×18,5	OK033/ OK079	LG		[-]	**PF0131**	87×53×17	OK039/ OK041
1.6 HDi 110	11/09→	82	112	BR	Ø Disc 323×28	[-]	**PF0555**	109,7×69,3×15		LG		[-]	**PF0131**	87×53×17	OK039/ OK041
1.6 HDi 90	11/09→	68	92	BSC	Ø Disc 283	[-]	**PF0697**	136,7×59,3×18,5	OK033/ OK079	LG		[-]	**PF0131**	87×53×17	OK039/ OK041
1.6 HDi 90	11/09→	68	92	BR	Ø Disc 323×28	[-]	**PF0555**	109,7×69,3×15		LG		[-]	**PF0131**	87×53×17	OK039/ OK041
1.6 Racing	02/11→	149	203	BSC	Ø Disc 283	[-]	**PF0697**	136,7×59,3×18,5	OK033/ OK079	LG		[-]	**PF0131**	87×53×17	OK039/ OK041
1.6 Racing	02/11→	149	203	BR	Ø Disc 323×28	[-]	**PF0555**	109,7×69,3×15		LG		[-]	**PF0131**	87×53×17	OK039/ OK041
1.6 Racing	02/11→	152	207	BSC	Ø Disc 283	[-]	**PF0697**	136,7×59,3×18,5	OK033/ OK079	LG		[-]	**PF0131**	87×53×17	OK039/ OK041
1.6 Racing	02/11→	152	207	BR	Ø Disc 323×28	[-]	**PF0555**	109,7×69,3×15		LG		[-]	**PF0131**	87×53×17	OK039/ OK041
1.6 THP 150	10→	110	150	BSC	Ø Disc 283	[-]	**PF0697**	136,7×59,3×18,5	OK033/ OK079	LG		[-]	**PF0131**	87×53×17	OK039/ OK041
1.6 THP 150	10→	110	150	BR	Ø Disc 323×28	[-]	**PF0555**	109,7×69,3×15		LG		[-]	**PF0131**	87×53×17	OK039/ OK041
1.6 THP 150	04/10→	115	156	BSC	Ø Disc 283	[-]	**PF0697**	136,7×59,3×18,5	OK033/ OK079	LG		[-]	**PF0131**	87×53×17	OK039/ OK041
1.6 THP 150	04/10→	115	156	BR	Ø Disc 323×28	[-]	**PF0555**	109,7×69,3×15		LG		[-]	**PF0131**	87×53×17	OK039/ OK041

		KW	CV	SiS	i	W.i.	MAGNETI MARELLI	W×H×Th (mm)	Extra kit [Opt]	SiS	i	W.i.	MAGNETI MARELLI	W×H×Th (mm)	Extra kit [Opt]
CITROËN															
DS3															
1.6 VTi 120	04/10→	88	120	BSC	Ø Disc 283	[-]	**PF0697**	136,7×59,3×18,5	OK033/ OK079	LG		[-]	**PF0131**	87×53×17	OK039/ OK041
1.6 VTi 120	04/10→	88	120	BR	Ø Disc 323×28	[-]	**PF0555**	109,7×69,3×15		LG		[-]	**PF0131**	87×53×17	OK039/ OK041
DS3 Cabriolet															
1.2 VTi 82	13→	60	82	BSC	Ø Disc 266	[-]	**PF0174**	136,9×51,6×19	OK012	LG		[-]	**PF0131**	87×53×17	OK039
1.2 VTi 82	13→	60	82	BSC	Ø Disc 283	[-]	**PF0697**	136,7×59,3×18,5	OK033/ OK079	LG		[-]	**PF0131**	87×53×17	OK039/ OK041
1.2 VTi 82	13→	60	82	BR	Ø Disc 323×28	[-]	**PF0555**	109,7×69,3×15		LG		[-]	**PF0131**	87×53×17	OK039/ OK041
1.6 VTi 120	13→	88	120	BSC	Ø Disc 266	[-]	**PF0174**	136,9×51,6×19	OK012	LG		[-]	**PF0131**	87×53×17	OK039
1.6 VTi 120	13→	88	120	BSC	Ø Disc 283	[-]	**PF0697**	136,7×59,3×18,5	OK033/ OK079	LG		[-]	**PF0131**	87×53×17	OK039/ OK041
1.6 VTi 120	13→	88	120	BR	Ø Disc 323×28	[-]	**PF0555**	109,7×69,3×15		LG		[-]	**PF0131**	87×53×17	OK039/ OK041
1.6 THP 155	13→	115	156	BSC	Ø Disc 266	[-]	**PF0174**	136,9×51,6×19	OK012	LG		[-]	**PF0131**	87×53×17	OK039
1.6 THP 155	13→	115	156	BSC	Ø Disc 283	[-]	**PF0697**	136,7×59,3×18,5	OK033/ OK079	LG		[-]	**PF0131**	87×53×17	OK039/ OK041
1.6 THP 155	13→	115	156	BR	Ø Disc 323×28	[-]	**PF0555**	109,7×69,3×15		LG		[-]	**PF0131**	87×53×17	OK039/ OK041
1.6 HDi 90	13→	69	92	BSC	Ø Disc 266	[-]	**PF0174**	136,9×51,6×19	OK012	LG		[-]	**PF0131**	87×53×17	OK039
1.6 HDi 90	13→	69	92	BSC	Ø Disc 283	[-]	**PF0697**	136,7×59,3×18,5	OK033/ OK079	LG		[-]	**PF0131**	87×53×17	OK039/ OK041
1.6 HDi 90	13→	69	92	BR	Ø Disc 323×28	[-]	**PF0555**	109,7×69,3×15		LG		[-]	**PF0131**	87×53×17	OK039/ OK041
DS4															
1.6 Vti	11→		120	ATE		[-]	**PF0169**	155,3×64,5×19,0		LG		[-]	**PF0131**	87×53×17	OK039/ OK041
1.6 Vti	11→		120	ATE		[-]	**PF0644**	155,3×71,9×18,2		LG		[-]	**PF0131**	87×53×17	OK039/ OK041
1.6 Vti	11→		120	LG		[-]	**PF0753**	129×53×18,5	OK088	LG	+HB el.	[-]	**PF0754**	103,8×55,9×17,3	OK039
1.6 THP 155	04/11→	115	156	ATE		[-]	**PF0169**	155,3×64,5×19,0		LG		[-]	**PF0131**	87×53×17	OK039/ OK041
1.6 THP 155	04/11→	115	156	ATE		[-]	**PF0644**	155,3×71,9×18,2		LG		[-]	**PF0131**	87×53×17	OK039/ OK041
1.6 THP	11→		155	LG		[-]	**PF0753**	129×53×18,5	OK088	LG	+HB el.	[-]	**PF0754**	103,8×55,9×17,3	OK039
1.6 THP 200	04/11→	147	200							LG		[-]	**PF0131**	87×53×17	OK039/ OK041
1.6 THP 200	04/11→	147	200							LG		[-]	**PF0131**	87×53×17	OK039/ OK041
1.6 THP	11→		155	LG		[-]	**PF0753**	129×53×18,5	OK088	LG	+HB el.	[-]	**PF0754**	103,8×55,9×17,3	OK039
1.6 e-Hdi	11→		110	ATE		[-]	**PF0169**	155,3×64,5×19,0		LG		[-]	**PF0131**	87×53×17	OK039/ OK041

		KW	CV	SiS	i	W.i.	MAGNETI MARELLI	W×H×Th (mm)	Extra kit [Opt]	SiS	i	W.i.	MAGNETI MARELLI	W×H×Th (mm)	Extra kit [Opt]
CITROËN															
DS4															
1.6 e-Hdi	11→		110	ATE		[-]	**PF0644**	155,3×71,9×18,2		LG		[-]	**PF0131**	87×53×17	OK039/ OK041
1.6 e-Hdi	11→		110	LG		[-]	**PF0753**	129×53×18,5	OK088	LG	+HB el.	[-]	**PF0754**	103,8×55,9×17,3	OK039
2.0 HDi 160	04/11→	120	163	ATE		[-]	**PF0169**	155,3×64,5×19,0		LG		[-]	**PF0131**	87×53×17	OK039/ OK041
2.0 HDi 160	04/11→	120	163	ATE		[-]	**PF0644**	155,3×71,9×18,2		LG		[-]	**PF0131**	87×53×17	OK039/ OK041
2.0 Ddi	11→		160	LG		[-]	**PF0753**	129×53×18,5	OK088	LG	+HB el.	[-]	**PF0754**	103,8×55,9×17,3	OK039
DS5															
1.6 HDi 110	11/11→	82	112	ATE	Ø Disc 302	[-]	**PF0644**	155,3×71,9×18,2		LG	+HB el.	[-]	**PF0754**	103,8×55,9×17,3	
1.6 HDi 110	11/11→	82	112							LG	+HB el.	[-]	**PF0754**	103,8×55,9×17,3	
1.6 THP 155	11/11→	115	156	ATE	Ø Disc 302	[-]	**PF0644**	155,3×71,9×18,2		LG	+HB el.	[-]	**PF0754**	103,8×55,9×17,3	
1.6 THP 155	11/11→	115	156							LG	+HB el.	[-]	**PF0754**	103,8×55,9×17,3	
1.6 THP 200	11/11→	147	200	ATE	Ø Disc 302	[-]	**PF0644**	155,3×71,9×18,2		LG	+HB el.	[-]	**PF0754**	103,8×55,9×17,3	
1.6 THP 200	11/11→	147	200							LG	+HB el.	[-]	**PF0754**	103,8×55,9×17,3	
2.0 HDi 160	11/11→	120	163	ATE	Ø Disc 302	[-]	**PF0644**	155,3×71,9×18,2		LG	+HB el.	[-]	**PF0754**	103,8×55,9×17,3	
2.0 HDi 160	11/11→	120	163							LG	+HB el.	[-]	**PF0754**	103,8×55,9×17,3	
2.0 HDi 165 Hybrid4	11/11→	120	163	ATE	Ø Disc 302	[-]	**PF0644**	155,3×71,9×18,2		LG	+HB el.	[-]	**PF0754**	103,8×55,9×17,3	
2.0 HDi 165 Hybrid4	11/11→	120	163							LG	+HB el.	[-]	**PF0754**	103,8×55,9×17,3	
Evasion (22,U6)															
1.8	05/97→07/02	73	99	BD		[+]	**PF0192**	140×68,8×19	OK067	ATE		[+]	**PF0788**	123,1×43,1×17	
1.8	02/96→12/96	76	103	BD		[+]	**PF0192**	140×68,8×19	OK067	ATE		[+]	**PF0788**	123,1×43,1×17	
1.9 TD	11/94→07/02	66	90	LG		[+]	**PF0787**	129,9×59×19	OK030	ATE		[+]	**PF0788**	123,1×43,1×17	
1.9 TD	10/95→12/98	68	92	LG		[+]	**PF0787**	129,9×59×19	OK030	ATE		[+]	**PF0788**	123,1×43,1×17	
2.0	06/94→07/02	89	121	LG		[+]	**PF0787**	129,9×59×19	OK030	ATE		[+]	**PF0788**	123,1×43,1×17	
2.0 16V	05/98→04/00	97	132	LG		[+]	**PF0787**	129,9×59×19	OK030	ATE		[+]	**PF0788**	123,1×43,1×17	
2.0 16V	05/00→07/02	100	136	LG		[+]	**PF0787**	129,9×59×19	OK030	ATE		[+]	**PF0788**	123,1×43,1×17	
2.0 HDI	08/99→07/02	80	109	LG		[+]	**PF0787**	129,9×59×19	OK030	ATE		[+]	**PF0788**	123,1×43,1×17	
2.0 HDI 16V	09/99→07/02	80	109	LG		[+]	**PF0787**	129,9×59×19	OK030	ATE		[+]	**PF0788**	123,1×43,1×17	
2.0 TD	05/97→07/02	68	92	LG		[+]	**PF0787**	129,9×59×19	OK030	ATE		[+]	**PF0788**	123,1×43,1×17	
2.0 Turbo C.T.	06/94→07/02	108	147	LG		[+]	**PF0787**	129,9×59×19	OK030	ATE		[+]	**PF0788**	123,1×43,1×17	
2.1 TD	05/96→07/02	80	109	LG		[+]	**PF0787**	129,9×59×19	OK030	ATE		[+]	**PF0788**	123,1×43,1×17	
Jumper I (230)															
Jumper 27 10q	94→11/99			LG		[+]	**PF0789**	145,1×61×19,5	OK030						
Jumper 10q	12/99→01			LG		[+]	**PF0183**	145,1×61×19,5	OK030						
Jumper 27 18q	94→11/99			LG		[+]	**PF0184**	160×64×19,5	OK030						
Jumper 18q	12/99→01			LG		[+]	**PF0185**	160×64×19,5	OK030						
Jumper 31 14q	94→11/99			LG		[+]	**PF0789**	145,1×61×19,5	OK030						
Jumper 14q	12/99→01			LG		[+]	**PF0183**	145,1×61×19,5	OK030						
Jumper 31 18q	94→11/99			LG		[+]	**PF0184**	160×64×19,5	OK030						
Jumper 35 18q	94→11/99			LG		[+]	**PF0184**	160×64×19,5	OK030						

		KW	CV	SiS	i	W.i.	MAGNETI MARELLI	W×H×Th (mm)	Extra kit [Opt]	SiS	i	W.i.	MAGNETI MARELLI	W×H×Th (mm)	Extra kit [Opt]
CITROËN															
Jumper II (244)															
Jumper 10q	02→06			BR		[+]	**PF0186**	140,5×65,9×19,3	OK060/ OK013	BR		[-]	**PF0188**	109,7×49,6×20	OK014
Jumper 14q	02→06			BR		[+]	**PF0186**	140,5×65,9×19,3	OK060/ OK013	BR		[-]	**PF0188**	109,7×49,6×20	OK014
Jumper 18q	02→06			BR		[+]	**PF0187**	164,8×69,3×19,3	OK060/ OK013	BR		[-]	**PF0188**	109,7×49,6×20	OK014
Jumper III															
Jumper 11q	06/06→			BR		[+]	**PF0189**	169,3×61,5×19,2	OK060/ OK053	BR		[-]	**PF0191**	137×48,8×19	OK012/ OK038
Jumper 11q	06/11→			BR	+2 w.i.	[+]	**PF0642**	169,3×61,5×19,2	OK060/ OK053	BR		[-]	**PF0191**	137×48,8×19	OK012/ OK038
Jumper 15q	06/06→			BR		[+]	**PF0189**	169,3×61,5×19,2	OK060/ OK053	BR		[-]	**PF0191**	137×48,8×19	OK012/ OK038
Jumper 15q	06/11→			BR	+2 w.i.	[+]	**PF0642**	169,3×61,5×19,2	OK060/ OK053	BR		[-]	**PF0191**	137×48,8×19	OK012/ OK038
Jumper 17q	06/06→			BR	Light	[+]	**PF0189**	169,3×61,5×19,2	OK060/ OK052	BR		[-]	**PF0191**	137×48,8×19	OK012/ OK038
Jumper 17q	06/11→			BR	Light/+2 w.i.	[+]	**PF0642**	169,3×61,5×19,2	OK060/ OK052	BR		[-]	**PF0191**	137×48,8×19	OK012/ OK038
Jumper 17q	06/06→			BR	Heavy	[+]	**PF0190**	169,3×69,2×19	OK060/ OK051	BR		[-]	**PF0191**	137×48,8×19	OK012/ OK038
Jumper 17q	06/11→			BR	Heavy/+ 2 w.i.	[+]	**PF0643**	169,3×69,2×19	OK060/ OK051	BR		[-]	**PF0191**	137×48,8×19	OK012/ OK038
Jumper 20q	06/06→			BR		[+]	**PF0190**	169,3×69,2×19	OK060/ OK066	BR		[-]	**PF0191**	137×48,8×19	OK012/ OK038
Jumper 20q	06/11→			BR	+2 w.i.	[+]	**PF0643**	169,3×69,2×19	OK060/ OK066	BR		[-]	**PF0191**	137×48,8×19	OK012/ OK038
Jumpy I															
1.6 EL	96→07			BD		[+]	**PF0192**	140×68,8×19	OK067						
1.6 EL	95→07			LG	(900kg)	[+]	**PF0787**	129,9×59×19	OK030						
1.6	02→07			LG		[+]	**PF0182**	146,7×60×19	OK037/ OK017						
1.9 D EL	96→07			BD		[+]	**PF0192**	140×68,8×19	OK067						
1.9 D EL	96→07			LG	(900kg)	[+]	**PF0787**	129,9×59×19	OK030						
1.9 D	02→07			LG		[+]	**PF0182**	146,7×60×19	OK037/ OK017						
1.9 TD EL	96→07			BD		[+]	**PF0192**	140×68,8×19	OK067						
1.9 TD EL	02→07			LG		[+]	**PF0182**	146,7×60×19	OK037/ OK017						
2.0 Hdi	02→07			LG		[+]	**PF0182**	146,7×60×19	OK037/ OK017						
2.0i 16V	03/00→07			LG		[+]	**PF0182**	146,7×60×19	OK037/ OK017						

		KW	CV													
				SiS	i	W.i.	MAGNETI MARELLI	W×H×Th (mm)	Extra kit [Opt]	SiS	i	W.i.	MAGNETI MARELLI	W×H×Th (mm)	Extra kit [Opt]
CITROËN															
Jumpy II															
1.6 HDi 90	01/07→	66	90	LG		[+]	**PF0193**	162×67,4×18,3	OK030/ OK059	LG		[-]	**PF0194**	113,5×58,3×16,7	OK030/ OK065
2.0 HDi 120	01/07→	88	120	LG		[+]	**PF0193**	162×67,4×18,3	OK030/ OK059	LG		[-]	**PF0194**	113,5×58,3×16,7	OK030/ OK065
2.0 HDi 140	01/07→	100	136	LG		[+]	**PF0193**	162×67,4×18,3	OK030/ OK059	LG		[-]	**PF0194**	113,5×58,3×16,7	OK030/ OK065
2.0 HDi 165	07/10→	120	163	LG		[+]	**PF0193**	162×67,4×18,3	OK030/ OK059	LG		[-]	**PF0194**	113,5×58,3×16,7	OK030/ OK065
2.0 i	01/07→	103	140	LG		[+]	**PF0193**	162×67,4×18,3	OK030/ OK059	LG		[-]	**PF0194**	113,5×58,3×16,7	OK030/ OK065
Jumpy II Box															
1.6 HDi 90	01/07→	66	90	LG		[+]	**PF0193**	162×67,4×18,3	OK030/ OK059	LG		[-]	**PF0194**	113,5×58,3×16,7	OK030/ OK065
2.0 HDi 120	01/07→	88	120	LG		[+]	**PF0193**	162×67,4×18,3	OK030/ OK059	LG		[-]	**PF0194**	113,5×58,3×16,7	OK030/ OK065
2.0 HDi 140	01/07→	100	136	LG		[+]	**PF0193**	162×67,4×18,3	OK030/ OK059	LG		[-]	**PF0194**	113,5×58,3×16,7	OK030/ OK065
2.0 HDi 165	07/10→	120	163	LG		[+]	**PF0193**	162×67,4×18,3	OK030/ OK059	LG		[-]	**PF0194**	113,5×58,3×16,7	OK030/ OK065
2.0 i	01/07→	103	140	LG		[+]	**PF0193**	162×67,4×18,3	OK030/ OK059	LG		[-]	**PF0194**	113,5×58,3×16,7	OK030/ OK065
Nemo Box (AA)															
1.3 HDi 75	10/10→	55	75	BSC	+2 w.i.	[+]	**PF0560**	122,9×53,4×18	OK012/ OK038						
1.4	02/08→	54	73	BSC		[+]	**PF0126**	122,9×53,4×18	OK012/ OK040						
1.4	02/08→	54	73	BSC	+2 w.i.	[+]	**PF0560**	122,9×53,4×18	OK012/ OK038						
1.4 HDi	02/08→	50	68	BSC		[+]	**PF0126**	122,9×53,4×18	OK012/ OK040						
1.4 HDi	02/08→	50	68	BSC	+2 w.i.	[+]	**PF0560**	122,9×53,4×18	OK012/ OK038						
Nemo SW (AA)															
1.2 HDi 75	10/10→	55	75	BSC	+2 w.i.	[+]	**PF0560**	122,9×53,4×18	OK012/ OK038						
1.4	04/09→	54	73	BSC		[+]	**PF0126**	122,9×53,4×18	OK012/ OK040						
1.4	04/09→	54	73	BSC	+2 w.i.	[+]	**PF0560**	122,9×53,4×18	OK012/ OK038						
1.4 HDi	04/09→	50	68	BSC		[+]	**PF0126**	122,9×53,4×18	OK012/ OK040						
1.4 HDi	04/09→	50	68	BSC	+2 w.i.	[+]	**PF0560**	122,9×53,4×18	OK012/ OK038						

		KW	CV	SiS	i	W.i.	MAGNETI MARELLI	W×H×Th (mm)	Extra kit [Opt]	SiS	i	W.i.	MAGNETI MARELLI	W×H×Th (mm)	Extra kit [Opt]
CITROËN															
Relay I															
1.9 D	02/94 → 02			LG		[+]	**PF0789**	145,1×61×19,5	OK030						
2.0i	02/94 → 02			LG		[+]	**PF0789**	145,1×61×19,5	OK030						
2.5 D	02/94 → 02			LG		[+]	**PF0789**	145,1×61×19,5	OK030						
2.5 D 35	02/94 → 02			LG		[+]	**PF0184**	160×64×19,5	OK030						
2.8 TD	02/94 → 02			LG		[+]	**PF0789**	145,1×61×19,5	OK030						
Relay II															
2.2 Hdi	04/02 →			BR		[+]	**PF0186**	140,5×65,9×19,3	OK060/ OK013						
2.8 Hdi	06/02 →			BR		[+]	**PF0187**	164,8×69,3×19,3	OK060/ OK013						
Saxo (S0/S1)															
1.0	96 → 04			ATE		[+]	**PF0165**	71,8×60,6×17							
1.0	97 → 04			CT	3 hole brake disc	[-]	**PF0166**	71,8×60,6×17							
1.1	96 → 04			BD		[+]	**PF0165**	71,8×60,6×17							
1.1	97 → 04			CT	3 hole brake disc	[-]	**PF0166**	71,8×60,6×17							
1.4	96 → 04			BD		[+]	**PF0372**	105×54,3×18							
1.4	97 → 04			CT	3 hole brake disc	[-]	**PF0166**	71,8×60,6×17							
1.5 D	96 → 04			BD		[+]	**PF0372**	105×54,3×18							
1.5 D	97 → 04			CT	3 hole brake disc	[-]	**PF0166**	71,8×60,6×17							
1.6	96 → 04			BD		[+]	**PF0372**	105×54,3×18		BD		[-]	**PF0790**	105×56×11	
1.6 VTL,VTR	05/96 → 06/03	65	88	ATE		[-]	**PF0196**	141,4×47,5×17,2		BD		[-]	**PF0197**	105×56×11	
1.6 VTR	05/96 → 07/99	80	109	ATE		[-]	**PF0196**	141,4×47,5×17,2		BD		[-]	**PF0790**	105×56×11	
Synergie															
1.8i	97 →			BD		[+]	**PF0192**	140×68,8×19	OK067	ATE		[+]	**PF0788**	123,1×43,1×17	
1.9 TD	94 →			LG		[+]	**PF0787**	129,9×59×19	OK030	ATE		[+]	**PF0788**	123,1×43,1×17	
2.0 TD	98 →			LG		[+]	**PF0787**	129,9×59×19	OK030	ATE		[+]	**PF0788**	123,1×43,1×17	
2.0i	94 →			LG		[+]	**PF0787**	129,9×59×19	OK030	ATE		[+]	**PF0788**	123,1×43,1×17	
2.0i 16V	94 →			LG		[+]	**PF0787**	129,9×59×19	OK030	ATE		[+]	**PF0788**	123,1×43,1×17	
2.0i T.	98 →			LG		[+]	**PF0787**	129,9×59×19	OK030	ATE		[+]	**PF0788**	123,1×43,1×17	
2.1 TD	98 →			LG		[+]	**PF0787**	129,9×59×19	OK030	ATE		[+]	**PF0788**	123,1×43,1×17	
Visa II															
1.7 D	85 →			LG		[+]	**PF0167**	90×62,8×17,5	OK030						
1.7 RD	85 →			LG		[+]	**PF0167**	90×62,8×17,5	OK030						
1.7 TR	85 →			LG		[+]	**PF0167**	90×62,8×17,5	OK030						
GTI	84 →			LG		[+]	**PF0167**	90×62,8×17,5	OK030						
Xantia Break															
1.8i	94 →			BD		[+]	**PF0198**	131×60,5×17							
1.9 D	94 →			BD		[+]	**PF0198**	131×60,5×17							
1.9 TD	94 →			BD		[+]	**PF0198**	131×60,5×17							
2.0i 16V	94 →			BD		[+]	**PF0198**	131×60,5×17							

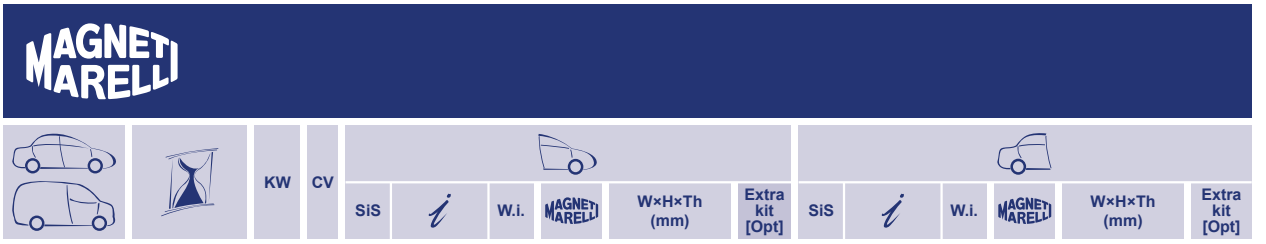

		KW	CV	SiS	i	W.i.	MAGNETI MARELLI	W×H×Th (mm)	Extra kit [Opt]	SiS	i	W.i.	MAGNETI MARELLI	W×H×Th (mm)	Extra kit [Opt]
CITROËN															
Xsara															
1.4i LX - SX	96→			BSC		[-]	**PF0200**	130,8×47,2×18	OK034						
1.4i LX - SX	96→			ATE		[-]	**PF0196**	141,4×47,5×17,2							
1.4i	97→00			BSC	+8 molle/ springs	[-]	**PF0201**	130,9×47,2×18	OK012						
1.4i	00→			BSC	+ABS	[-]	**PF0537**	130,9×52,2×17,8	OK034	BD		[-]	**PF0197**	105×56×11	
1.4i 16V	09/00→			BSC		[-]	**PF0170**	136,9×51,6×19	OK012/ OK038						
1.4 Hdi	01/03→			BSC		[-]	**PF0170**	136,9×51,6×19	OK012/ OK038						
1.6i 16V	97→			LG		[-]	**PF0199**	130×56,3×19	OK030	BD		[-]	**PF0790**	105×56×11	
1.6i 16V	09/00→			BSC		[-]	**PF0170**	136,9×51,6×19	OK012/ OK038	BD		[-]	**PF0790**	105×56×11	
1.6i 16V	09/00→			BSC		[-]	**PF0176**	136,9×57×19	OK012/ OK038	BD		[-]	**PF0790**	105×56×11	
1.6i	00→			BSC	+ABS	[-]	**PF0537**	130,9×52,2×17,8	OK034	BD		[-]	**PF0197**	105×56×11	
1.8i 16V VTS - Exclusive	97→			LG		[-]	**PF0199**	130×56,3×19	OK030	BD		[-]	**PF0790**	105×56×11	
1.8i	00→			BSC	+ABS	[-]	**PF0537**	130,9×52,2×17,8	OK034	BD		[-]	**PF0197**	105×56×11	
1.9 TD LX - SX - Exclusive	96→			ATE		[-]	**PF0196**	141,4×47,5×17,2		BD		[-]	**PF0197**	105×56×11	
1.9 TD	00→			BSC	+ABS	[-]	**PF0537**	130,9×52,2×17,8	OK034	BD		[-]	**PF0197**	105×56×11	
1.9 D LX - SX	96→			ATE		[-]	**PF0196**	141,4×47,5×17,2		BD		[-]	**PF0197**	105×56×11	
1.9 D	00→			BSC	+ABS	[-]	**PF0537**	130,9×52,2×17,8	OK034	BD		[-]	**PF0197**	105×56×11	
1.9 D	09/00→			BSC		[-]	**PF0170**	136,9×51,6×19	OK012/ OK038	BD		[-]	**PF0197**	105×56×11	
1.9 D	09/00→			BSC		[-]	**PF0176**	136,9×57×19	OK012/ OK038	BD		[-]	**PF0197**	105×56×11	
2.0i 16V	04/97→			LG		[+]	**PF0202**	130×56×19	OK030	BD	+ABS	[-]	**PF0197**	105×56×11	
2.0i 16V	09/00→			BSC		[-]	**PF0170**	136,9×51,6×19	OK012/ OK038	BD	+ABS	[-]	**PF0197**	105×56×11	
2.0 Hdi	02/99→9/00			LG		[+]	**PF0202**	130×56×19	OK030	BD	+ABS	[-]	**PF0197**	105×56×11	
2.0i Hdi	00→		90	BSC	+ABS	[-]	**PF0537**	130,9×52,2×17,8	OK034	BD	+ABS	[-]	**PF0197**	105×56×11	
2.0i Hdi	00→		90	BSC	+ABS	[-]	**PF0537**	130,9×52,2×17,8	OK034	BD	+ABS	[-]	**PF0790**	105×56×11	
2.0 HDI	09/00→		90	LG		[-]	**PF0199**	130×56,3×19	OK030	BD	+ABS	[-]	**PF0790**	105×56×11	
2.0 HDI	09/00→		90	BSC		[-]	**PF0176**	136,9×57×19	OK012/ OK038	BD	+ABS	[-]	**PF0790**	105×56×11	
2.0 HDI	05/01→		109	LG		[+]	**PF0202**	130×56×19	OK030	BD	+ABS	[-]	**PF0790**	105×56×11	
2.0 HDI	05/01→		109	BSC		[+]	**PF0176**	136,9×57×19	OK012/ OK038	BD	+ABS	[-]	**PF0790**	105×56×11	
Xsara Break (N2)															
1.4 HDi	01/03→08/05	50	68	ATE		[-]	**PF0196**	141,4×47,5×17,2							
1.4 HDi	01/03→08/05	50	68	LG		[-]	**PF0199**	130×56,3×19	OK030						
1.4 i	10/97→08/05	55	75	ATE		[-]	**PF0196**	141,4×47,5×17,2							
1.4 i	10/97→08/05	55	75	LG		[-]	**PF0199**	130×56,3×19	OK030						





KW	CV	SiS	i	W.i.	MAGNETI MARELLI	W×H×Th (mm)	Extra kit [Opt]	SiS	i	W.i.	MAGNETI MARELLI	W×H×Th (mm)	Extra kit [Opt]

CITROËN

Xsara Break (N2)

1.5 D	10/97 → 09/00	42	57	ATE		[-]	**PF0196**	141,4×47,5×17,2									
1.5 D	10/97 → 09/00	42	57	LG		[-]	**PF0199**	130×56,3×19	OK030								
1.6 16V	09/00 → 08/05	80	109	ATE		[-]	**PF0196**	141,4×47,5×17,2									
1.6 16V	09/00 → 08/05	80	109	LG		[-]	**PF0199**	130×56,3×19	OK030								
1.6 i	10/97 → 09/00	65	88	ATE		[-]	**PF0196**	141,4×47,5×17,2									
1.6 i	10/97 → 09/00	65	88	LG		[-]	**PF0199**	130×56,3×19	OK030								
1.8 D	10/97 → 09/00	43	58	ATE		[-]	**PF0196**	141,4×47,5×17,2									
1.8 D	10/97 → 09/00	43	58	LG		[-]	**PF0199**	130×56,3×19	OK030								
1.8 i	10/97 → 09/00	66	90	ATE		[-]	**PF0196**	141,4×47,5×17,2									
1.8 i	10/97 → 09/00	66	90	LG		[-]	**PF0199**	130×56,3×19	OK030								
1.8 i 16V	10/97 → 09/00	81	110	ATE		[-]	**PF0196**	141,4×47,5×17,2									
1.8 i 16V	10/97 → 09/00	81	110	LG		[-]	**PF0199**	130×56,3×19	OK030								
1.8 i Aut.	10/97 → 09/00	74	101	ATE		[-]	**PF0196**	141,4×47,5×17,2									
1.8 i Aut.	10/97 → 09/00	74	101	LG		[-]	**PF0199**	130×56,3×19	OK030								
1.9 D	10/97 → 09/00	50	68	ATE		[-]	**PF0196**	141,4×47,5×17,2									
1.9 D	10/97 → 09/00	50	68	LG		[-]	**PF0199**	130×56,3×19	OK030								
1.9 D	01/98 → 09/00	55	75	ATE		[-]	**PF0196**	141,4×47,5×17,2									
1.9 D	01/98 → 09/00	55	75	LG		[-]	**PF0199**	130×56,3×19	OK030								
1.9 D	07/98 → 08/05	51	70	ATE		[-]	**PF0196**	141,4×47,5×17,2									
1.9 D	07/98 → 08/05	51	70	LG		[-]	**PF0199**	130×56,3×19	OK030								
1.9 TD	10/97 → 09/00	66	90	ATE		[-]	**PF0196**	141,4×47,5×17,2									
1.9 TD	10/97 → 09/00	66	90	LG		[-]	**PF0199**	130×56,3×19	OK030								
2.0 16V	07/98 → 09/00	97	132	ATE		[-]	**PF0196**	141,4×47,5×17,2									
2.0 16V	07/98 → 09/00	97	132	LG		[-]	**PF0199**	130×56,3×19	OK030								
2.0 16V	09/00 → 08/05	100	136	ATE		[-]	**PF0196**	141,4×47,5×17,2									
2.0 16V	09/00 → 08/05	100	136	LG		[-]	**PF0199**	130×56,3×19	OK030								
2.0 HDi 109	05/01 → 08/05	80	109	ATE		[-]	**PF0196**	141,4×47,5×17,2									
2.0 HDi 109	05/01 → 08/05	80	109	LG		[-]	**PF0199**	130×56,3×19	OK030								
2.0 HDI 90	02/99 → 08/05	66	90	ATE		[-]	**PF0196**	141,4×47,5×17,2									
2.0 HDI 90	02/99 → 08/05	66	90	LG		[-]	**PF0199**	130×56,3×19	OK030								

Xsara Coupé (N0)

1.4 HDi	01/03 → 03/05	50	68	LG		[-]	**PF0199**	130×56,3×19	OK030	BD		[-]	**PF0790**	105×56×11			
1.4 i	03/98 → 03/05	55	75	LG		[-]	**PF0199**	130×56,3×19	OK030	BD		[-]	**PF0790**	105×56×11			
1.6 16V	09/00 → 03/05	80	109	LG		[-]	**PF0199**	130×56,3×19	OK030	BD		[-]	**PF0790**	105×56×11			
1.6 i	02/98 → 09/00	65	88	LG		[-]	**PF0199**	130×56,3×19	OK030	BD		[-]	**PF0790**	105×56×11			
1.8 i	02/98 → 09/00	66	90	LG		[-]	**PF0199**	130×56,3×19	OK030	BD		[-]	**PF0790**	105×56×11			
1.8 i	02/98 → 09/00	74	101	LG		[-]	**PF0199**	130×56,3×19	OK030	BD		[-]	**PF0790**	105×56×11			
1.8 i 16V	02/98 → 09/00	81	110	LG		[-]	**PF0199**	130×56,3×19	OK030	BD		[-]	**PF0790**	105×56×11			
1.8 VTS	09/00 → 10/04	85	116	LG		[-]	**PF0199**	130×56,3×19	OK030	BD		[-]	**PF0790**	105×56×11			
1.9 D	02/99 → 03/05	51	70	LG		[-]	**PF0199**	130×56,3×19	OK030	BD		[-]	**PF0790**	105×56×11			
1.9 D	02/98 → 09/00	50	68	LG		[-]	**PF0199**	130×56,3×19	OK030	BD		[-]	**PF0790**	105×56×11			
1.9 D	02/98 → 05/99	55	75	LG		[-]	**PF0199**	130×56,3×19	OK030	BD		[-]	**PF0790**	105×56×11			
1.9 TD	02/98 → 09/00	66	90	LG		[-]	**PF0199**	130×56,3×19	OK030	BD		[-]	**PF0790**	105×56×11			
2.0	08/98 → 08/00	97	132	LG		[-]	**PF0199**	130×56,3×19	OK030	BD		[-]	**PF0790**	105×56×11			

		KW	CV	SiS	i	W.i.	MAGNETI MARELLI	W×H×Th (mm)	Extra kit [Opt]	SiS	i	W.i.	MAGNETI MARELLI	W×H×Th (mm)	Extra kit [Opt]
CITROËN															
Xsara Coupé (N0)															
2.0 16V	09/00 → 03/05	100	136	LG		[-]	**PF0199**	130×56,3×19	OK030	BD		[-]	**PF0790**	105×56×11	
2.0 HDi 109	05/01 → 03/05	80	109	LG		[-]	**PF0199**	130×56,3×19	OK030	BD		[-]	**PF0790**	105×56×11	
2.0 HDI 90	02/99 → 03/05	66	90	LG		[-]	**PF0199**	130×56,3×19	OK030	BD		[-]	**PF0790**	105×56×11	
2.0 i 16V	02/98 → 03/05	120	163	LG		[-]	**PF0199**	130×56,3×19	OK030	BD		[-]	**PF0790**	105×56×11	
Xsara Picasso (N68)															
1.6i 16V	99 → 09/01			LG		[-]	**PF0199**	130×56,3×19	OK030	LG		[-]	**PF0131**	87×53×17	OK039
1.6i 16V	10/01 → 10			BSC	-ESP	[-]	**PF0170**	136,9×51,6×19	OK012/ OK038	LG		[-]	**PF0131**	87×53×17	OK039
1.6i 16V	10/01 → 10			BSC	+ESP	[-]	**PF0176**	136,9×57×19	OK012/ OK038	LG		[-]	**PF0131**	87×53×17	OK039
1.8i 16V	99 → 09/01			LG		[-]	**PF0199**	130×56,3×19	OK030	LG		[-]	**PF0131**	87×53×17	OK039
1.8i 16V	10/01 → 10			BSC	-ESP	[-]	**PF0170**	136,9×51,6×19	OK012/ OK038	LG		[-]	**PF0131**	87×53×17	OK039
1.8i 16V	10/01 → 10			BSC	+ESP	[-]	**PF0176**	136,9×57×19	OK012/ OK038	LG		[-]	**PF0131**	87×53×17	OK039
2.0i 16V	01/03 → 10	100		BSC	-ESP	[-]	**PF0170**	136,9×51,6×19	OK012/ OK038	LG		[-]	**PF0131**	87×53×17	OK039
2.0i 16V	01/03 → 10	100		BSC	+ESP	[-]	**PF0176**	136,9×57×19	OK012/ OK038	LG		[-]	**PF0131**	87×53×17	OK039
2.0 HDI	00 → 09/01			LG		[-]	**PF0199**	130×56,3×19	OK030	LG		[-]	**PF0131**	87×53×17	OK039
2.0 HDI	10/01 → 10	66		BSC	-ESP	[-]	**PF0170**	136,9×51,6×19	OK012/ OK038	LG		[-]	**PF0131**	87×53×17	OK039
2.0 HDI	10/01 → 10	66		BSC	+ESP	[-]	**PF0176**	136,9×57×19	OK012/ OK038	LG		[-]	**PF0131**	87×53×17	OK039
ZX (N2)															
1.4I Avantage Reflex	91 →			BD		[+]	**PF0168**	105×54,3×18							
1.6 Aura	91 →									BD		[+]	**PF0197**	105×56×11	
1.8 Furio	91 →									BD		[+]	**PF0197**	105×56×11	
1.9 TD Avantage Aura - Volcane	91 →									BD		[+]	**PF0197**	105×56×11	
1.9 D Avantage Reflex	91 →			BD		[+]	**PF0168**	105×54,3×18							
2.0 16V	92 →									BD		[+]	**PF0197**	105×56×11	
2.0i 16V	05/96 → 06/97		163	LG		[+]	**PF0202**	130×56×19	OK030						
2.0 Volcane	91 →									BD		[+]	**PF0197**	105×56×11	
ZX Break (N2)															
1.4 i	10/93 → 10/97	55	75							BD		[+]	**PF0197**	105×56×11	
1.5 D	06/96 → 02/98	42	57							BD		[+]	**PF0197**	105×56×11	
1.6 i	10/93 → 10/97	65	88							BD		[+]	**PF0197**	105×56×11	
1.8 D	10/93 → 10/97	44	60							BD		[+]	**PF0197**	105×56×11	
1.8 i	10/93 → 10/97	74	101							BD		[+]	**PF0197**	105×56×11	
1.8 i 16V	01/96 → 02/98	81	110							BD		[+]	**PF0197**	105×56×11	

		KW	CV	SiS	i	W.i.	MAGNETI MARELLI	W×H×Th (mm)	Extra kit [Opt]	SiS	i	W.i.	MAGNETI MARELLI	W×H×Th (mm)	Extra kit [Opt]
CITROËN															
ZX Break (N2)															
1.9 D	10/93 → 10/97	47	64							BD		[+]	**PF0197**	105×56×11	
1.9 D	06/94 → 10/97	50	68							BD		[+]	**PF0197**	105×56×11	
1.9 TD	10/93 → 10/97	66	90							BD		[+]	**PF0197**	105×56×11	
DACIA															
Dokker															
1.2 Tce	12→	84	115	ATE	+ESP/15"	[-]	**PF0429**	155,3×64,5×17,9							
1.2 Tce	12→	84	115	LG	-ESP	[-]	**PF0347**	116,5×52,4×17	OK030						
1.5 Dci 8V	12→	55	75	ATE	+ESP/15"	[-]	**PF0429**	155,3×64,5×17,9							
1.5 Dci 8V	12→	55	75	LG	-ESP	[-]	**PF0347**	116,5×52,4×17	OK030						
1.5 Dci 8V	12→	66	90	ATE	+ESP/15"	[-]	**PF0429**	155,3×64,5×17,9							
1.5 Dci 8V	12→	66	90	LG	-ESP	[-]	**PF0347**	116,5×52,4×17	OK030						
1.6 Mpi 8V	12→	61	85	ATE	+ESP/15"	[-]	**PF0429**	155,3×64,5×17,9							
1.6 Mpi 8V	12→	61	85	LG	-ESP	[-]	**PF0347**	116,5×52,4×17	OK030						
1.6 16V	12→	61	83	ATE	+ESP/15"	[-]	**PF0429**	155,3×64,5×17,9							
1.6 16V	12→	61	83	LG	-ESP	[-]	**PF0347**	116,5×52,4×17	OK030						
1.6 16V Flexifuel	12→	77	105	ATE	+ESP/15"	[-]	**PF0429**	155,3×64,5×17,9							
1.6 16V Flexifuel	12→	77	105	LG	-ESP	[-]	**PF0347**	116,5×52,4×17	OK030						
Dokker Express															
1.5 dCi	12→	55	75	LG	-ESP	[-]	**PF0347**	116,5×52,4×17	OK030						
1.5 dCi	12→	55	75	ATE	+ESP/15"	[-]	**PF0429**	155,3×64,5×17,9							
1.5 dCi	12→	66	90	LG	-ESP	[-]	**PF0347**	116,5×52,4×17	OK030						
1.5 dCi	12→	66	90	ATE	+ESP/15"	[-]	**PF0429**	155,3×64,5×17,9							
1.6 16V	12→	61	83	LG	-ESP	[-]	**PF0347**	116,5×52,4×17	OK030						
1.6 16V	12→	61	83	ATE	+ESP/15"	[-]	**PF0429**	155,3×64,5×17,9							
Duster II															
1.5 dCi	10/10→	66	90	LG		[-]	**PF0429**	155,3×64,5×17,9							
1.5 dCi	04/10→	63	86	LG		[-]	**PF0429**	155,3×64,5×17,9							
1.5 dCi	06/10→	79	107	LG		[-]	**PF0429**	155,3×64,5×17,9							
1.5 dCi 4x4	10/10→	66	90	LG		[-]	**PF0429**	155,3×64,5×17,9							
1.5 dCi 4x4	06/10→	79	107	LG		[-]	**PF0429**	155,3×64,5×17,9							
1.6 16V	04/10→	77	105	LG		[-]	**PF0347**	116,5×52,4×17	OK030/ OK058						
1.6 16V 4x4	06/10→	77	105	LG		[-]	**PF0347**	116,5×52,4×17	OK030/ OK058						
1.6 16V LPG	04/11→	74	100	LG		[-]	**PF0347**	116,5×52,4×17	OK030/ OK058						
Lodgy															
1.2 TCe	03/12→	85	115	LG	-ESP	[-]	**PF0347**	116,5×52,4×17	OK030/ OK058						
1.2 TCe	03/12→	85	115	ATE	+ESP	[-]	**PF0429**	155,3×64,5×17,9							

		KW	CV	SiS	i	W.i.	MAGNETI MARELLI	W×H×Th (mm)	Extra kit [Opt]	SiS	i	W.i.	MAGNETI MARELLI	W×H×Th (mm)	Extra kit [Opt]
DACIA															
Lodgy															
1.6	03/12→	61	83	LG	-ESP	[-]	**PF0347**	116,5×52,4×17	OK030/ OK058						
1.6	03/12→	61	83	ATE	+ESP	[-]	**PF0429**	155,3×64,5×17,9							
1.5 dCi	03/12→	66	90	LG	-ESP	[-]	**PF0347**	116,5×52,4×17	OK030/ OK058						
1.5 dCi	03/12→	66	90	ATE	+ESP	[-]	**PF0429**	155,3×64,5×17,9							
1.5 dCi	06/10→	79	107	LG	-ESP	[-]	**PF0347**	116,5×52,4×17	OK030/ OK058						
1.5 dCi	03/12→	79	107	ATE	+ESP	[-]	**PF0429**	155,3×64,5×17,9							
Logan Berlina (LS)															
1.2 16V	02/06→	55	75	LG		[+]	**PF0203**	99,9×64,8×18	OK030						
1.4	09/04→	55	75	LG	(LSOA, LSOC, LSOE, LSOG)	[+]	**PF0203**	99,9×64,8×18	OK030						
1.4 MPI LPG	02/06→	55	75	LG	(LS0C)	[+]	**PF0203**	99,9×64,8×18	OK030						
1.5 dCi	05/10→	65	88	LG	(LS04)	[+]	**PF0203**	99,9×64,8×18	OK030						
1.5 dCi	05/10→	55	75	LG	(LS04)	[+]	**PF0203**	99,9×64,8×18	OK030						
1.5 dCi	09/05→	48	65	LG	(LS0J, LS0Y)	[+]	**PF0203**	99,9×64,8×18	OK030						
1.5 dCi	01/06→	50	68	LG	(LS0K)	[+]	**PF0203**	99,9×64,8×18	OK030						
1.5 dCi	09/07→	63	86	LG	(LS0W)	[+]	**PF0203**	99,9×64,8×18	OK030						
1.6	09/04→	64	87	LG	(LSOB, LSOD, LSOF, LSOH)	[+]	**PF0203**	99,9×64,8×18	OK030						
1.6 16V	02/06→	77	105	LG	(LS0M)	[+]	**PF0203**	99,9×64,8×18	OK030						
1.6 Bifuel	05/10→	62	84	LG		[+]	**PF0203**	99,9×64,8×18	OK030						
1.6 MPI 85	05/10→	62	84	LG		[+]	**PF0203**	99,9×64,8×18	OK030						
Logan SW (KS)															
1.4	02/07→			LG		[+]	**PF0203**	99,9×64,8×18	OK030						
1.4	02/07→			ATE		[-]	**PF0545**	150,3×52,5×17,5							
1.5 Dci	02/07→			LG		[+]	**PF0203**	99,9×64,8×18	OK030						
1.5 Dci	02/07→			ATE		[-]	**PF0545**	150,3×52,5×17,5							
1.6	02/07→			LG		[+]	**PF0203**	99,9×64,8×18	OK030						
1.6	02/07→			ATE		[-]	**PF0545**	150,3×52,5×17,5							
1.6 16V	02/07→			LG		[+]	**PF0203**	99,9×64,8×18	OK030						
1.6 16V	02/07→			ATE		[-]	**PF0545**	150,3×52,5×17,5							
Logan Express (FS)															
1.4	03/09→	55	75	ATE		[-]	**PF0545**	150,3×52,5×17,5							
1.5 dCi	05/10→	55	75	ATE		[-]	**PF0545**	150,3×52,5×17,5							
1.5 dCi	05/10→	65	88	ATE		[-]	**PF0545**	150,3×52,5×17,5							
1.5 dCi	03/09→	50	68	ATE	(FS0K)	[-]	**PF0545**	150,3×52,5×17,5							
1.5 dCi	03/09→	63	86	ATE	(FS0W)	[-]	**PF0545**	150,3×52,5×17,5							
1.6	03/09→	64	87	ATE		[-]	**PF0545**	150,3×52,5×17,5							
1.6 Bifuel	05/10→	62	84	ATE		[-]	**PF0545**	150,3×52,5×17,5							

		KW	CV	SiS	i	W.i.	MAGNETI MARELLI	W×H×Th (mm)	Extra kit [Opt]	SiS	i	W.i.	MAGNETI MARELLI	W×H×Th (mm)	Extra kit [Opt]
DACIA															
Logan Express (FS)															
1.6 MPI 85	05/10→	62	84	ATE		[-]	**PF0545**	150,3×52,5×17,5							
Logan Pickup (US)															
1.4	01/09→	55	75	ATE		[-]	**PF0545**	150,3×52,5×17,5							
1.5 dCi	05/10→	55	75	ATE		[-]	**PF0545**	150,3×52,5×17,5							
1.5 dCi	05/10→	65	88	ATE		[-]	**PF0545**	150,3×52,5×17,5							
1.5 dCi	03/08→	50	68	ATE	(US0K)	[-]	**PF0545**	150,3×52,5×17,5							
1.5 dCi	03/08→	63	86	ATE	(US0W)	[-]	**PF0545**	150,3×52,5×17,5							
1.6	03/08→	64	87	ATE		[-]	**PF0545**	150,3×52,5×17,5							
1.6 Bifuel	05/10→	62	84	ATE		[-]	**PF0545**	150,3×52,5×17,5							
1.6 MPI 85	05/10→	62	84	ATE		[-]	**PF0545**	150,3×52,5×17,5							
Logan II															
TCe 90	10/12→	66	90	ATE		[-]	**PF0718**	140,2×40×18,1							
1.2	10/12→	55	75	ATE		[-]	**PF0718**	140,2×40×18,1							
1.5 dCi	10/12→	55	75	ATE		[-]	**PF0718**	140,2×40×18,1							
1.5 dCi	10/12→	66	90	ATE		[-]	**PF0718**	140,2×40×18,1							
Logan MCV II															
1.2	02/13→	55	75	ATE		[-]	**PF0718**	140,2×40×18,1							
1.2 LPG	02/13→	55	75	ATE		[-]	**PF0718**	140,2×40×18,1							
1.5 dCi	02/13→	66	90	ATE		[-]	**PF0718**	140,2×40×18,1							
TCe 90	02/13→	66	90	ATE		[-]	**PF0718**	140,2×40×18,1							
Sandero															
1.2 16V	11/08→	55	75	LG		[+]	**PF0203**	99,9×64,8×18	OK030						
1.2 16V Bifuel	11/08→	55	75	LG		[+]	**PF0203**	99,9×64,8×18	OK030						
1.4	06/08→	55	75	LG		[+]	**PF0203**	99,9×64,8×18	OK030						
1.4 MPI LPG	01/09→	53	72	LG		[+]	**PF0203**	99,9×64,8×18	OK030						
1.5 dCi	05/10→	55	75	LG		[+]	**PF0203**	99,9×64,8×18	OK030						
1.5 dCi	05/10→	65	88	LG		[+]	**PF0203**	99,9×64,8×18	OK030						
1.5 dCi	11/08→	50	68	LG		[+]	**PF0203**	99,9×64,8×18	OK030						
1.5 dCi	11/08→	63	86	LG		[+]	**PF0203**	99,9×64,8×18	OK030						
1.6	06/08→	64	87	LG		[+]	**PF0203**	99,9×64,8×18	OK030						
1.6 MPI 85	05/10→	62	84	LG		[+]	**PF0203**	99,9×64,8×18	OK030						
1.6 16V Bifuel	06/11→	77	105	LG		[+]	**PF0203**	99,9×64,8×18	OK030						
Sandero II															
1.2	01/13→	55	75	ATE		[-]	**PF0718**	140,2×40×18,1							
1.2 LPG	01/13→	55	75	ATE		[-]	**PF0718**	140,2×40×18,1							
TCe 90	01/13→	66	90	ATE		[-]	**PF0718**	140,2×40×18,1							
1.5 dCi	01/13→	66	90	ATE		[-]	**PF0718**	140,2×40×18,1							
Solenza															
1.4	02/03→	55	75	LG		[+]	**PF0203**	99,9×64,8×18	OK030						
1.9 D	02/03→	46	63	LG		[+]	**PF0203**	99,9×64,8×18	OK030						

		KW	CV	SiS	i	W.i.	MAGNETI MARELLI	W×H×Th (mm)	Extra kit [Opt]	SiS	i	W.i.	MAGNETI MARELLI	W×H×Th (mm)	Extra kit [Opt]
DAEWOO (CHEVROLET)															
Aranos															
1.5	01/95 → 11/97	66	90	ATE		[-]	**PF0208**	140,1×48,4×16,5							
Espero (KLEJ)															
1.5	10/97 → 09/99	55	75	ST		[+]	**PF0207**	143×51×17							
1.5 16V	02/95 → 06/99	66	90	ST		[+]	**PF0207**	143×51×17							
1.5 16V	10/93 → 09/94	65	88	ST		[+]	**PF0207**	143×51×17							
1.8	02/95 → 09/99	66	90	ST		[-]	**PF0510**	143×51×17							
1.8	02/95 → 06/99	70	95	ST		[+]	**PF0207**	143×51×17							
2.0i CD	96 → 99			ST		[-]	**PF0510**	143×51×17							
2.0	10/93 → 09/94	81	110	ST		[+]	**PF0207**	143×51×17							
Evanda (KLAL)															
2.0	08/02 →	96	131	ST		[+]	**PF0206**	143×51,5×17							
Kalos (KLAS)															
1.2	04/03 →	53	72	AK		[-]	**PF0163**	133,2×49×17,8							
1.4	09/02 →	61	83	AK		[-]	**PF0163**	133,2×49×17,8							
1.4 16V	04/03 →	69	94	AK		[-]	**PF0163**	133,2×49×17,8							
1.5	11/02 → 12/04	62	84	AK		[-]	**PF0163**	133,2×49×17,8							
Kalos 3 Volumi (KLAS)															
1.4	11/02 → 12/04	61	83	AK		[-]	**PF0163**	133,2×49×17,8							
1.4	05/03 → 12/04	69	94	AK		[-]	**PF0163**	133,2×49×17,8							
1.5	11/02 → 12/04	62	84	AK		[-]	**PF0163**	133,2×49×17,8							
Lacetti (KLAN)															
1.4	02/04 →	70	95	ST		[+]	**PF0207**	143×51×17							
1.6	02/04 →	80	109	ST		[+]	**PF0207**	143×51×17							
1.8	02/04 →	90	122	ST		[+]	**PF0207**	143×51×17							
Lanos (KLAT)															
1.4	05/97 →	55	75	ATE		[-]	**PF0208**	140,1×48,4×16,5							
1.5	05/97 →	63	86	ATE		[-]	**PF0208**	140,1×48,4×16,5							
1.5	10/97 → 06/99	73	99	ATE		[-]	**PF0208**	140,1×48,4×16,5							
Lanos 3 Volumi (KLAT)															
1.4	05/97 →	55	75	ATE		[-]	**PF0208**	140,1×48,4×16,5							
1.5	05/97 →	63	86	ATE		[-]	**PF0208**	140,1×48,4×16,5							
Leganza (KLAV)															
1.8 CD	06/97 → 07/03	70	95	ST		[+]	**PF0206**	143×51,5×17							
2.0	01/01 → 12/02	133	181	ST		[+]	**PF0206**	143×51,5×17							
2.0 16V	06/97 → 12/02	98	133	ST		[+]	**PF0206**	143×51,5×17							
2.0 16V	07/00 →	93	126	ST		[+]	**PF0206**	143×51,5×17							
2.2 16V	04/99 → 12/02	100	136	ST		[+]	**PF0206**	143×51,5×17							
Matiz (KLYA)															
0.8	09/98 →	38	52	AK		[-]	**PF0164**	127×48×16							
1.0	01/03 →	47	64	AK		[-]	**PF0164**	127×48×16							
Matiz Van (KLA4)															
0.8	08/98 →	38	52	AK		[-]	**PF0164**	127×48×16							

		KW	CV	SiS	i	W.i.	MAGNETI MARELLI	W×H×Th (mm)	Extra kit [Opt]	SiS	i	W.i.	MAGNETI MARELLI	W×H×Th (mm)	Extra kit [Opt]
DAEWOO (CHEVROLET)															
Nexia															
1.5i GLX/GTX	95 → 97			ATE		[-]	**PF0208**	140,1×48,4×16,5							
1.5i 8V	97 → 04			DM	13"	[-]	**PF0354**	100×59×15,6							
1.5i 8V	04 →			AK	13"	[-]	**PF0164**	127×48×16							
1.5i 16V	03 →			ST	14"	[-]	**PF0206**	143×51,5×17							
1.5i 16V	03 →			ST	14"	[-]	**PF0510**	143×51×17							
Nubira Berlina (KL.)															
1.6i 16V	97 → 03/05			ST		[-]	**PF0510**	143×51×17							
1.6i 16V	97 → 03/05			ST		[+]	**PF0207**	143×51×17							
2.0i 16V	97 → 03/05			ST		[-]	**PF0510**	143×51×17							
2.0i 16V	97 → 03/05			ST		[+]	**PF0207**	143×51×17							
Nubira SW (KL.)															
1.6i 16V	97 → 03/05			ST		[-]	**PF0510**	143×51×17							
1.6i 16V	97 → 03/05			ST		[+]	**PF0207**	143×51×17							
2.0i 16V	97 → 03/05			ST		[-]	**PF0510**	143×51×17							
2.0i 16V	97 → 03/05			ST		[+]	**PF0207**	143×51×17							
Rezzo (KLAU)															
1.6	09/00 →	77	105	ST		[+]	**PF0207**	143×51×17							
1.6 SX	08/01 → 12/04	66	90	ST		[+]	**PF0207**	143×51×17							
1.8	09/00 →	74	101	ST		[+]	**PF0207**	143×51×17							
1.8	09/00 →	72	98	ST		[+]	**PF0207**	143×51×17							
1.8	09/00 →	66	90	ST		[+]	**PF0207**	143×51×17							
1.8	09/00 →	67	91	ST		[+]	**PF0207**	143×51×17							
2.0	09/00 →	94	128	ST		[+]	**PF0207**	143×51×17							
2.0	09/01 →	89	121	ST		[+]	**PF0207**	143×51×17							
Tacuma (KLAU)															
1.6i 16V	01 → 01/05			ST		[+]	**PF0207**	143×51×17							
1.8i	00 → 01			ST		[+]	**PF0207**	143×51×17							
2.0i 16V	00 → 04			ST		[+]	**PF0207**	143×51×17							
DAIHATSU															
Atria Van															
0.7 CL	08/99 →	35	48	ST		[+]	**PF0333**	114,1×19,9×15							
0.7 Custom 4x4	08/99 →	35	48	ST		[+]	**PF0333**	114,1×19,9×15							
Atria Bus															
0.7	06/92 → 07/99	32	44	ST		[+]	**PF0333**	114,1×19,9×15							
0.7	08/99 →	35	48	ST		[+]	**PF0333**	114,1×19,9×15							
0.7 4x4	08/99 →	35	48	ST		[+]	**PF0333**	114,1×19,9×15							
0.7 CL 4x4	08/99 →	47	64	ST		[+]	**PF0333**	114,1×19,9×15							
BEGO															
1.3 DVVT	11/05 →	63	86	ST		[+]	**PF0333**	114,1×19,9×15							
1.3 DVVT 4x4	11/05 →	63	86	ST		[+]	**PF0333**	114,1×19,9×15							
1.5 DVVT	11/05 →	77	105	ST		[+]	**PF0333**	114,1×19,9×15							
1.5 DVVT 4x4	11/05 →	77	105	ST		[+]	**PF0333**	114,1×19,9×15							

		KW	CV	SiS	i	W.i.	MAGNETI MARELLI	W×H×Th (mm)	Extra kit [Opt]	SiS	i	W.i.	MAGNETI MARELLI	W×H×Th (mm)	Extra kit [Opt]
DAIHATSU															
Charade V (L2)															
1.0	03→	43	58	ST		[+]	**PF0791**	122,1×43,4×15,3							
1.0	03→	51	69	ST		[+]	**PF0791**	122,1×43,4×15,3							
Charade VI															
1.3 16v	05/11→	77	99	ATE	Made in (F)	[+]	**PF0404**	150,3×58×17,5							
1.3 16v	05/11→	77	99	AK	Made in (J)/-ABS	[-]	**PF0628**	122,8×49,7×17							
1.3 16v	05/11→	77	99	AK	Made in (J)	[-]	**PF0627**	122,8×54,3×17,5							
Coo															
1.0	10/06→	40	54	LG		[+]	**PF0684**	125,7×51.4×16,5	OK033/ OK084						
1.0	10/06→	43	58	LG		[+]	**PF0684**	125,7×51.4×16,5	OK033/ OK084						
1.3	10/06→	67	91	LG		[+]	**PF0684**	125,7×51.4×16,5	OK033/ OK084						
1.3 Turbo	10/06→	95	129	LG		[+]	**PF0684**	125,7×51.4×16,5	OK033/ OK084						
1.5	10/06→	76	103	LG		[+]	**PF0684**	125,7×51.4×16,5	OK033/ OK084						
1.5 4x4	10/06→	76	103	LG		[+]	**PF0684**	125,7×51.4×16,5	OK033/ OK084						
Copen															
0.7	09/03→	50	68	ST		[+]	**PF0471**	108,7×45,4×16							
0.7	09/03→	47	64	ST		[+]	**PF0471**	108,7×45,4×16							
1.3	03/06→	64	87	ST		[+]	**PF0471**	108,7×45,4×16							
Cuore VII (L251)															
0.7	03/03→	47	64	ST		[+]	**PF0791**	122,1×43,4×15,3							
0.7	03/03→	35	48	ST		[+]	**PF0791**	122,1×43,4×15,3							
0.7	03/03→	43	58	ST		[+]	**PF0791**	122,1×43,4×15,3							
0.7	03/03→	43	58	ST	All-wheel Drive	[+]	**PF0791**	122,1×43,4×15,3							
0.7 Turbo Avy	03/03→	47	64	ST	All-wheel Drive	[+]	**PF0791**	122,1×43,4×15,3							
1.0	05/03→	43	58	ST		[+]	**PF0791**	122,1×43,4×15,3							
Cuore VIII (L251)															
1.0	04/07→	51	70	ST		[+]	**PF0791**	122,1×43,4×15,3							
Extol Bus (S22_, S23_)															
1.3	07/00→	63	86	ST		[+]	**PF0333**	114,1×19,9×15							
1.3 4x4	07/00→09/03	66	90	ST		[+]	**PF0333**	114,1×19,9×15							
1.3 4x4	10/03→	68	92	ST		[+]	**PF0333**	114,1×19,9×15							
1.3 L	10/03→	68	92	ST		[+]	**PF0333**	114,1×19,9×15							

		KW	CV	SiS	i	W.i.	MAGNETI MARELLI	W×H×Th (mm)	Extra kit [Opt]	SiS	i	W.i.	MAGNETI MARELLI	W×H×Th (mm)	Extra kit [Opt]
DAIHATSU															
Materia (M4)															
1.0	10/06 →	40	54	LG		[-]	**PF0254**	125,7×51.4×16,5	OK033/ OK084						
1.0	10/06 →	40	54	LG		[+]	**PF0684**	125,7×51.4×16,5	OK033/ OK084						
1.0 DVVT	10/06 →	43	58	LG		[-]	**PF0254**	125,7×51.4×16,5	OK033/ OK084						
1.0 DVVT	10/06 →	43	58	LG		[+]	**PF0684**	125,7×51.4×16,5	OK033/ OK084						
1.3	10/06 →	67	91	LG		[-]	**PF0254**	125,7×51.4×16,5	OK033/ OK084						
1.3	10/06 →	67	91	LG		[+]	**PF0684**	125,7×51.4×16,5	OK033/ OK084						
1.3 DVVT Turbo	10/06 →	95	129	LG		[-]	**PF0254**	125,7×51.4×16,5	OK033/ OK084						
1.3 DVVT Turbo	10/06 →	95	129	LG		[+]	**PF0684**	125,7×51.4×16,5	OK033/ OK084						
1.5	10/06 →	76	103	LG		[-]	**PF0254**	125,7×51.4×16,5	OK033/ OK084						
1.5	10/06 →	76	103	LG		[+]	**PF0684**	125,7×51.4×16,5	OK033/ OK084						
1.5 4WD	10/06 →			LG		[-]	**PF0254**	125,7×51.4×16,5	OK033/ OK084						
1.5 4WD	10/06 →			LG		[+]	**PF0684**	125,7×51.4×16,5	OK033/ OK084						
1.5 ECO 4WD	10/06 →	76	103	LG		[-]	**PF0254**	125,7×51.4×16,5	OK033/ OK084						
1.5 ECO 4WD	10/06 →	76	103	LG		[+]	**PF0684**	125,7×51.4×16,5	OK033/ OK084						
Move (L6/L9)															
0.7	09/98 → 09/02	33	45	AK		[+]	**PF0209**	115,5×49,6×15,3							
0.7	09/98 → 09/02	43	58	AK		[+]	**PF0209**	115,5×49,6×15,3							
0.7	09/98 → 09/02	47	64	AK		[+]	**PF0209**	115,5×49,6×15,3							
0.7	06/94 → 08/98	38	52	AK		[+]	**PF0209**	115,5×49,6×15,3							
0.7 4x4	09/98 → 09/02	43	58	AK		[+]	**PF0209**	115,5×49,6×15,3							
0.7 4x4	04/97 → 09/02	47	64	AK		[+]	**PF0209**	115,5×49,6×15,3							
0.7 4x4	06/94 → 08/98	41	56	AK		[+]	**PF0209**	115,5×49,6×15,3							
0.7 CX	06/94 → 08/98	41	56	AK		[+]	**PF0209**	115,5×49,6×15,3							
0.8	10/96 →	31	42	AK		[+]	**PF0209**	115,5×49,6×15,3							
1.0 i	10/98 →	41	55	AK		[+]	**PF0209**	115,5×49,6×15,3							
Rush															
1.3	11/05 →	63	86	ST		[+]	**PF0333**	114,1×19,9×15							
1.5	11/05 →	77	105	ST		[+]	**PF0333**	114,1×19,9×15							
1.5 4x4	11/05 →	77	105	ST		[+]	**PF0333**	114,1×19,9×15							

		KW	CV	SiS	i	W.i.	MAGNETI MARELLI	W×H×Th (mm)	Extra kit [Opt]	SiS	i	W.i.	MAGNETI MARELLI	W×H×Th (mm)	Extra kit [Opt]
DAIHATSU															
Sirion (M1)															
0.7 Turbo 4WD	98 → 05	88	120	AK		[+]	**PF0209**	115,5×49,6×15,3							
1.0i	98 → 05	43	58	AK		[+]	**PF0209**	115,5×49,6×15,3							
1.0i	05 →			ST		[+]	**PF0471**	108,7×45,4×16							
1.0i 4WD	04/99 → 05	43	58	AK		[+]	**PF0209**	115,5×49,6×15,3							
1.3	05 →			ST		[+]	**PF0471**	108,7×45,4×16							
1.3 Sport	00 → 01/05	75	102	AK		[+]	**PF0209**	115,5×49,6×15,3							
1.3 Sport 4WD	00 → 01/05	75	102	AK		[+]	**PF0209**	115,5×49,6×15,3							
1.3 GTV-i	01 → 04/05	75	102	AK		[+]	**PF0209**	115,5×49,6×15,3							
1.3 DVVT CX 16V 4x4	01 → 02	75	102	AK		[+]	**PF0209**	115,5×49,6×15,3							
Sirion II (M3)															
1.0	01/05 →	51	70	LG		[-]	**PF0254**	125,7×51.4×16,5	OK033/ OK084						
1.0 DVVT 4WD	04/05 →	51	69	LG		[-]	**PF0254**	125,7×51.4×16,5	OK033/ OK084						
1.3	01/05 →	64	87	LG		[-]	**PF0254**	125,7×51.4×16,5	OK033/ OK084						
1.3	03/08 →	67	91	LG		[-]	**PF0254**	125,7×51.4×16,5	OK033/ OK084						
1.3 4WD	04/05 →	64	87	LG		[-]	**PF0254**	125,7×51.4×16,5	OK033/ OK084						
1.3 4WD	03/08 →	67	91	LG		[-]	**PF0254**	125,7×51.4×16,5	OK033/ OK084						
1.5	03/08 →	76	103	LG		[-]	**PF0254**	125,7×51.4×16,5	OK033/ OK084						
1.5 4WD	05/06 → 10/08	76	103	LG		[-]	**PF0254**	125,7×51.4×16,5	OK033/ OK084						
Storia															
1.0	04/05 →	51	69	AK		[+]	**PF0209**	115,5×49,6×15,3							
1.3 4x4	04/05 →	64	87	AK		[+]	**PF0209**	115,5×49,6×15,3							
Terios I (J1)															
0.7	09/00 →	44	60	ST		[+]	**PF0333**	114,1×19,9×15							
0.7	09/00 →	47	64	ST		[+]	**PF0333**	114,1×19,9×15							
0.7 4WD	05/97 → 08/00	44	60	ST		[+]	**PF0333**	114,1×19,9×15							
0.7 4WD	05/97 → 08/00	47	64	ST		[+]	**PF0333**	114,1×19,9×15							
1.3	09/01 → 10/05	63	86	ST		[+]	**PF0333**	114,1×19,9×15							
1.3 4WD	10/97 → 10/00	61	83	ST		[+]	**PF0333**	114,1×19,9×15							
1.3 4WD	10/00 → 10/05	63	86	ST		[+]	**PF0333**	114,1×19,9×15							
1.3 DVVT FWD	10/02 → 10/05	63	86	ST		[+]	**PF0333**	114,1×19,9×15							
1.3 DVVT Turbo 4WD	10/02 → 10/05	103	140	ST		[+]	**PF0333**	114,1×19,9×15							
1.5	05/99 → 10/05	63	86	ST		[+]	**PF0333**	114,1×19,9×15							
1.6	05/99 → 10/05	66	90	ST		[+]	**PF0333**	114,1×19,9×15							

		KW	CV	SiS	i	W.i.	MAGNETI MARELLI	W×H×Th (mm)	Extra kit [Opt]	SiS	i	W.i.	MAGNETI MARELLI	W×H×Th (mm)	Extra kit [Opt]
DAIHATSU															
Terios II (J2)															
1.3 DVVT	11/05→	63	86	ST		[+]	PF0333	114,1×19,9×15							
1.3 DVVT 4x4	11/05→	63	86	ST		[+]	PF0333	114,1×19,9×15							
1.5	11/05→	77	105	ST		[+]	PF0333	114,1×19,9×15							
1.5 4WD	05/06→	77	105	ST		[+]	PF0333	114,1×19,9×15							
1.5 DVVT	09/10→	75	102	ST		[+]	PF0333	114,1×19,9×15							
Trevis															
1.0	06/06→	43	58	ST		[+]	PF0791	122,1×43,4×15,3							
YRV (M2)															
1.0	02/01→	43	58	AK		[+]	PF0209	115,5×49,6×15,3							
1.3	02/01→	64	87	AK		[+]	PF0209	115,5×49,6×15,3							
1.3 4WD	02/01→	64	87	AK		[+]	PF0209	115,5×49,6×15,3							
1.3 GTti	07/02→	95	129	ST		[+]	PF0471	108,7×45,4×16							
DODGE															
Avenger															
2.0	06/07→	115	156	ST	17"	[+]	PF0338	144,9×54,9×15,6		AK	Ø Disc 302	[+]	PF0340	91×44,8 ×15,4	
2.0	06/07→	115	156							AK	Ø Disc 262	[+]	PF0285	85,5×38,7×15,5	
2.0 CRD	06/07→	103	140	ST	17"	[+]	PF0338	144,9×54,9×15,6		AK	Ø Disc 302	[+]	PF0340	91×44,8 ×15,4	
2.0 CRD	06/07→	103	140							AK	Ø Disc 262	[+]	PF0285	85,5×38,7×15,5	
2.4	06/07→	125	170	ST	17"	[+]	PF0338	144,9×54,9×15,6		AK	Ø Disc 302	[+]	PF0340	91×44,8 ×15,4	
2.4	06/07→	125	170							AK	Ø Disc 262	[+]	PF0285	85,5×38,7×15,5	
2.4	06/07→	129	175	ST	17"	[+]	PF0338	144,9×54,9×15,6		AK	Ø Disc 302	[+]	PF0340	91×44,8 ×15,4	
2.4	06/07→	129	175							AK	Ø Disc 262	[+]	PF0285	85,5×38,7×15,5	
2.7	06/07→	137	186	ST	17"	[+]	PF0338	144,9×54,9×15,6		AK	Ø Disc 302	[+]	PF0340	91×44,8 ×15,4	
2.7	06/07→	137	186							AK	Ø Disc 262	[+]	PF0285	85,5×38,7×15,5	
2.7 Flex-Fuel	06/07→	139	189	ST	17"	[+]	PF0338	144,9×54,9×15,6		AK	Ø Disc 302	[+]	PF0340	91×44,8 ×15,4	
2.7 Flex-Fuel	06/07→	139	189							AK	Ø Disc 262	[+]	PF0285	85,5×38,7×15,5	
Caliber															
1.8	06/06→	110	150	ST		[+]	PF0338	144,9×54,9×15,6		AK		[+]	PF0285	85,5×38,7×15,5	
1.8	06/06→	110	150							AK		[+]	PF0285	85,5×38,7×15,5	
2.0	06/06→	115	156	ST		[+]	PF0338	144,9×54,9×15,6		AK		[+]	PF0285	85,5×38,7×15,5	
2.0	06/06→	115	156							AK		[+]	PF0285	85,5×38,7×15,5	
2.0 CRD	06/06→	103	140	ST		[+]	PF0338	144,9×54,9×15,6		AK		[+]	PF0285	85,5×38,7×15,5	
2.0 CRD	06/06→	103	140							AK		[+]	PF0285	85,5×38,7×15,5	
2.4	10/06→	125	170	ST		[+]	PF0338	144,9×54,9×15,6		AK		[+]	PF0285	85,5×38,7×15,5	
2.4	10/06→	125	170							AK		[+]	PF0285	85,5×38,7×15,5	
2.4 Turbo	12/07→	217	295	ST		[+]	PF0338	144,9×54,9×15,6		AK		[+]	PF0285	85,5×38,7×15,5	
2.4 Turbo	12/07→	217	295							AK		[+]	PF0285	85,5×38,7×15,5	
2.4 VVT AWD	10/06→	223	303	ST		[+]	PF0338	144,9×54,9×15,6		AK		[+]	PF0285	85,5×38,7×15,5	
2.4 VVT AWD	10/06→	223	303							AK		[+]	PF0285	85,5×38,7×15,5	

		KW	CV												
				SiS	i	W.i.	MAGNETI MARELLI	W×H×Th (mm)	Extra kit [Opt]	SiS	i	W.i.	MAGNETI MARELLI	W×H×Th (mm)	Extra kit [Opt]
DODGE															
Caravan I															
3.0	10/88 → 09/90	100	136	KH		[-]	**PF0785**	165,2×51,6×17							
3.3	10/89 → 09/90	112	152	KH		[-]	**PF0785**	165,2×51,6×17							
3.3	10/90 → 09/95	120	163	KH		[-]	**PF0785**	165,2×51,6×17							
3.3 AWD	10/90 → 09/95	120	163	KH		[-]	**PF0785**	165,2×51,6×17							
Caravan II															
2.0 i	01/95 → 03/01	98	133	KH		[-]	**PF0785**	165,2×51,6×17							
2.4 i	01/95 → 03/01	111	151	KH		[-]	**PF0785**	165,2×51,6×17							
2.5 TD	01/95 → 03/01	85	116	KH		[-]	**PF0785**	165,2×51,6×17							
3.0	01/95 → 03/01	112	152	KH		[-]	**PF0785**	165,2×51,6×17							
3.3 i	01/95 → 03/01	116	158	KH		[-]	**PF0785**	165,2×51,6×17							
3.8 i	01/95 → 03/01	122	166	KH		[-]	**PF0785**	165,2×51,6×17							
3.8 i	01/95 → 03/01	131	178	KH		[-]	**PF0785**	165,2×51,6×17							
3.8 i AWD	01/95 → 03/01	122	166	KH		[-]	**PF0785**	165,2×51,6×17							
3.8 i AWD	01/95 → 03/01	131	178	KH		[-]	**PF0785**	165,2×51,6×17							
Colt 3 Volumi															
1.5 12V	01/93 → 12/94	69	94	ST		[+]	**PF0333**	114,1×19,9×15							
1.5 12V	01/93 → 12/94	69	94	ST		[+]	**PF0333**	114,1×19,9×15							
1.8 16V	01/93 → 12/94	84	114	ST		[+]	**PF0333**	114,1×19,9×15							
1.8 16V	01/94 → 12/94	84	114	ST		[+]	**PF0333**	114,1×19,9×15							
2.4	01/93 → 12/94	101	137	ST		[+]	**PF0333**	114,1×19,9×15							
2.4	01/94 → 12/94	101	137	ST		[+]	**PF0333**	114,1×19,9×15							
Grand Caravan															
3.3	06/07 →	127	173	KH		[+]	**PF0785**	165,2×51,6×17							
3.8	06/07 →	148	201	KH		[+]	**PF0785**	165,2×51,6×17							
4.0	06/07 →	173	235	KH		[+]	**PF0785**	165,2×51,6×17							
Intrepid															
2.7	10/97 → 09/04	149	203	KH		[+]	**PF0785**	165,2×51,6×17							
3.2	04/98 → 09/04	168	228	KH		[+]	**PF0785**	165,2×51,6×17							
3.3	10/92 → 12/94	110	150	KH		[+]	**PF0785**	165,2×51,6×17							
3.3	01/95 → 12/98	120	163	KH		[+]	**PF0785**	165,2×51,6×17							
3.5	10/92 → 12/98	160	218	KH		[+]	**PF0785**	165,2×51,6×17							
3.5 ES	04/98 → 09/04	187	254	KH		[+]	**PF0785**	165,2×51,6×17							
Journey															
2.0 CRD	06/08 →	103	140	ST		[+]	**PF0211**	146×64×18		LG		[+]	**PF0210**	116,7×52,6×17	
2.4	01/09 →	125	170	ST		[+]	**PF0211**	146×64×18		LG		[+]	**PF0210**	116,7×52,6×17	
2.4 ECO+	03/09 →	125	170	ST		[+]	**PF0211**	146×64×18		LG		[+]	**PF0210**	116,7×52,6×17	
2.7	01/09 →	136	185	ST		[+]	**PF0211**	146×64×18		LG		[+]	**PF0210**	116,7×52,6×17	
2.7 FLEXFUEL	01/09 →	136	185	ST		[+]	**PF0211**	146×64×18		LG		[+]	**PF0210**	116,7×52,6×17	
3.5	06/08 →	173	235	ST		[+]	**PF0211**	146×64×18		LG		[+]	**PF0210**	116,7×52,6×17	
3.5 AWD	06/08 →	173	235	ST		[+]	**PF0211**	146×64×18		LG		[+]	**PF0210**	116,7×52,6×17	

		KW	CV	SiS	i	W.i.	MAGNETI MARELLI	W×H×Th (mm)	Extra kit [Opt]	SiS	i	W.i.	MAGNETI MARELLI	W×H×Th (mm)	Extra kit [Opt]
DODGE															
Nitro															
2.8 CRD	06/07→	130	177	ST		[+]	**PF0211**	146×64×18							
2.8 CRD 4WD	06/07→	130	177	ST		[+]	**PF0211**	146×64×18							
3.7 V6 4WD	06/07→	151	205	ST		[+]	**PF0211**	146×64×18							
4.0 4WD	06/07→	191	260	ST		[+]	**PF0211**	146×64×18							
DR															
DR1															
1.0	03/10→	50	68	AK		[+]	**PF0534**	106,4×50,2×15							
1.0 LPG	03/10→	50	68	AK		[+]	**PF0534**	106,4×50,2×15							
1.0 Flex	03/10→	50	68	AK		[+]	**PF0534**	106,4×50,2×15							
1.3	03/10→	61	83	AK		[+]	**PF0534**	106,4×50,2×15							
1.3 LPG	03/10→	61	83	AK		[+]	**PF0534**	106,4×50,2×15							
1.3 Flex	03/10→	61	83	AK		[+]	**PF0534**	106,4×50,2×15							
DR2															
1.3	09/10→	61	83	AK		[+]	**PF0534**	106,4×50,2×15							
1.3 LPG	09/10→	61	83	AK		[+]	**PF0534**	106,4×50,2×15							
1.3 Flex	09/10→	61	83	AK		[+]	**PF0534**	106,4×50,2×15							
DR5															
1.6	01/11→	80	109	LG		[+]	**PF0599**	119,2×69,5×17,9	OK032	AK		[+]	**PF0578**	78,3×54,1×14	
1.6 GPL	01/11→	80	109	LG		[+]	**PF0599**	119,2×69,5×17,9	OK032	AK		[+]	**PF0578**	78,3×54,1×14	
1.6	01/11→	87	118	LG		[+]	**PF0599**	119,2×69,5×17,9	OK032	AK		[+]	**PF0578**	78,3×54,1×14	
1.6 Flex	01/11→	80	109	LG		[+]	**PF0599**	119,2×69,5×17,9	OK032	AK		[+]	**PF0578**	78,3×54,1×14	
1.8	01/11→	97	132	LG		[+]	**PF0599**	119,2×69,5×17,9	OK032	AK		[+]	**PF0578**	78,3×54,1×14	
1.9 D	01/11→	88	120	LG		[+]	**PF0599**	119,2×69,5×17,9	OK032	AK		[+]	**PF0578**	78,3×54,1×14	
2.0	01/11→	94	128	LG		[+]	**PF0599**	119,2×69,5×17,9	OK032	AK		[+]	**PF0578**	78,3×54,1×14	
2.0	01/11→	102	139	LG		[+]	**PF0599**	119,2×69,5×17,9	OK032	AK		[+]	**PF0578**	78,3×54,1×14	
2.0 Flex	01/11→	94	128	LG		[+]	**PF0599**	119,2×69,5×17,9	OK032	AK		[+]	**PF0578**	78,3×54,1×14	
2.0 GPL	01/11→	94	128	LG		[+]	**PF0599**	119,2×69,5×17,9	OK032	AK		[+]	**PF0578**	78,3×54,1×14	
FERRARI															
360 Modena (F131)															
360 F1	03/99→	294	400	BR		[+]	**PF0107**	109,7×69,3×17,8		BR		[+]	**PF0107**	109,7×69,3×17,8	
Challenge Stradale	03/99→	313	425	BR		[+]	**PF0107**	109,7×69,3×17,8		BR		[+]	**PF0107**	109,7×69,3×17,8	
360 Modena Spider (F131)															
3.6	02/00→	294	400	BR		[+]	**PF0107**	109,7×69,3×17,8		BR		[+]	**PF0107**	109,7×69,3×17,8	
FIAT															
131															
Mirafiori 1.4 CL/Super	82→85			BD		[+]	**PF0212**	108,8×47,4×18	OK028						
Mirafiori 1.6 D	82→85			BD		[+]	**PF0212**	108,8×47,4×18	OK028						
Mirafiori 2.5 D	82→85			BD		[+]	**PF0212**	108,8×47,4×18	OK028						

		KW	CV	SiS	i	W.i.	MAGNETI MARELLI	W×H×Th (mm)	Extra kit [Opt]	SiS	i	W.i.	MAGNETI MARELLI	W×H×Th (mm)	Extra kit [Opt]
FIAT															
500															
0.9 TwinAir	09/10 →	48	65	ATE	+2 w.i.	[+]	**PF0453**	115×55,6×17		LG		[-]	**PF0216**	95,8×43,9×13,7	OK039
0.9 TwinAir	09/12 →	48	65	ATE	Solid Disc	[+]	**PF0440**	149,3×52,5×17,4		LG		[-]	**PF0216**	95,8×43,9×13,7	OK039
0.9 TwinAir	07/10 →	63	86	ATE	Solid Disc	[+]	**PF0440**	149,3×52,5×17,4		LG		[-]	**PF0216**	95,8×43,9×13,7	OK039
0.9 TwinAir	07/10 →		105	BSC		[+]	**PF0214**	137×57,3×19	OK033	LG		[-]	**PF0216**	95,8×43,9×13,7	OK039
1.2	10/07 →	51	69	BD		[+]	**PF0454**	115×55,6×17	OK029/ OK094	LG		[-]	**PF0216**	95,8×43,9×13,7	OK039
1.2	10/07 →	51	69	BD	+KIT	[+]	**PF0455**	115×55,6×17	OK029/ OK094	LG		[-]	**PF0216**	95,8×43,9×13,7	OK039
1.2	06/13 →	48	65	ATE	+2 w.i.	[+]	**PF0453**	115×55,6×17		LG		[-]	**PF0216**	95,8×43,9×13,7	OK039
1.2 LPG	12/10 →	51	69	BD		[+]	**PF0454**	115×55,6×17	OK029/ OK094	LG		[-]	**PF0216**	95,8×43,9×13,7	OK039
1.2 LPG	12/10 →	51	69	BD	+KIT	[+]	**PF0455**	115×55,6×17	OK029/ OK094	LG		[-]	**PF0216**	95,8×43,9×13,7	OK039
1.3 D Multijet	10/07 →	55	75	BSC		[+]	**PF0215**	122,9×51,7×17,5	OK012/ OK040	LG		[-]	**PF0216**	95,8×43,9×13,7	OK039
1.3 D Multijet	12/09 →	70	95	BSC		[+]	**PF0215**	122,9×51,7×17,5	OK012/ OK040	LG		[-]	**PF0216**	95,8×43,9×13,7	OK039
1.4	10/07 →	74	100	BSC		[+]	**PF0430**	122,9×53,4×18	OK012	LG		[-]	**PF0216**	95,8×43,9×13,7	OK039
500 Abarth															
1.4 Abarth	08/08 →	99	135	BSC		[+]	**PF0214**	137×57,3×19	OK033/ OK038	LG		[-]	**PF0216**	95,8×43,9×13,7	OK039
1.4 Abarth	08/08 →	118	160	BR	+2 w.i.	[+]	**PF0591**	124,7×70,7×15,1		LG		[-]	**PF0216**	95,8×43,9×13,7	OK039
1.4 Abarth	08/08 →	132	180	BR	+2 w.i.	[+]	**PF0591**	124,7×70,7×15,1		LG		[-]	**PF0216**	95,8×43,9×13,7	OK039
1.4 Abarth	08/08 →	140	190	BR	+2 w.i.	[+]	**PF0591**	124,7×70,7×15,1		LG		[-]	**PF0216**	95,8×43,9×13,7	OK039
500 C															
0.9	09/12 →	48	65	BSC		[+]	**PF0215**	122,9×51,7×17,5	OK012/ OK040	LG		[-]	**PF0216**	95,8×43,9×13,7	OK039
0.9	09/09 →	63	86	BSC		[+]	**PF0215**	122,9×51,7×17,5	OK012/ OK040	LG		[-]	**PF0216**	95,8×43,9×13,7	OK039
1.2	09/09 →	51	69	BSC		[+]	**PF0215**	122,9×51,7×17,5	OK012/ OK040	LG		[-]	**PF0216**	95,8×43,9×13,7	OK039
1.3 D Multijet	09/09 →	55	75	BSC		[+]	**PF0215**	122,9×51,7×17,5	OK012/ OK040	LG		[-]	**PF0216**	95,8×43,9×13,7	OK039
1.3 D Multijet	09/09 →	70	95	BSC		[+]	**PF0215**	122,9×51,7×17,5	OK012/ OK040	LG		[-]	**PF0216**	95,8×43,9×13,7	OK039
1.4	09/09 →	74	100	BSC		[+]	**PF0430**	122,9×53,4×18	OK012	LG		[-]	**PF0216**	95,8×43,9×13,7	OK039
1.4 Abarth	09/09 →	103	140	BSC		[+]	**PF0214**	137×57,3×19	OK033/ OK038	LG		[-]	**PF0216**	95,8×43,9×13,7	OK039
500 L															
0.9	09/12 →	77	105	BSC		[+]	**PF0562**	137×57,3×19	OK012/ OK079	LG		[+]	**PF0688**	95,8×43,9×17	OK039
0.9 CNG	03/13 →	63	86	BSC		[+]	**PF0562**	137×57,3×19	OK012/ OK079	LG		[+]	**PF0688**	95,8×43,9×17	OK039

		KW	CV	SiS	i	W.i.	MAGNETI MARELLI	W×H×Th (mm)	Extra kit [Opt]	SiS	i	W.i.	MAGNETI MARELLI	W×H×Th (mm)	Extra kit [Opt]
FIAT															
500 L															
1.3 D Multijet	09/12→	62	84	BSC		[+]	**PF0562**	137×57,3×19	OK012/ OK079	LG		[+]	**PF0688**	95,8×43,9×17	OK039
1.4	09/12→	70	95	BSC		[+]	**PF0562**	137×57,3×19	OK012/ OK079	LG		[+]	**PF0688**	95,8×43,9×17	OK039
1.4	10/13→	88	120	BSC		[+]	**PF0562**	137×57,3×19	OK012/ OK079	LG		[+]	**PF0688**	95,8×43,9×17	OK039
1.4 LPG	02/14→	88	120	BSC		[+]	**PF0562**	137×57,3×19	OK012/ OK079	LG		[+]	**PF0688**	95,8×43,9×17	OK039
1.6 D Multijet	09/12→	77	105	BSC		[+]	**PF0562**	137×57,3×19	OK012/ OK079	LG		[+]	**PF0688**	95,8×43,9×17	OK039
1.6 D Multijet	09/13→	88	120	BSC		[+]	**PF0562**	137×57,3×19	OK012/ OK079	LG		[+]	**PF0688**	95,8×43,9×17	OK039
500L Living															
0.9	13→	77	105	BSC		[+]	**PF0562**	137×57,3×19	OK012/ OK079	LG		[+]	**PF0688**	95,8×43,9×17	OK039
0.9 CNG	13→	59	80	BSC		[+]	**PF0562**	137×57,3×19	OK012/ OK079	LG		[+]	**PF0688**	95,8×43,9×17	OK039
1.4	13→	88	120	BSC		[+]	**PF0562**	137×57,3×19	OK012/ OK079	LG		[+]	**PF0688**	95,8×43,9×17	OK039
1.3 D Multijet	13→	62	84	BSC		[+]	**PF0562**	137×57,3×19	OK012/ OK079	LG		[+]	**PF0688**	95,8×43,9×17	OK039
1.6 D Multijet	13→	77	105	BSC		[+]	**PF0562**	137×57,3×19	OK012/ OK079	LG		[+]	**PF0688**	95,8×43,9×17	OK039
1.6 D Multijet	13→	88	120	BSC		[+]	**PF0562**	137×57,3×19	OK012/ OK079	LG		[+]	**PF0688**	95,8×43,9×17	OK039
500X															
1.4 M-AIR	14→	103	140	ATE		[+]	**PF0792**	155,3×64,5×19,2		TRW		[+]	**PF0794**	115,5×49,5×17,2	OK039
1.6 D	14→	88	120	ATE		[+]	**PF0792**	155,3×64,5×19,2		TRW		[+]	**PF0794**	115,5×49,5×17,2	OK039
1.6	14→	81		MN		[+]	**PF0793**	140,9×63,3×20,5		TRW		[+]	**PF0794**	115,5×49,5×17,2	OK039
2.0 D	14→	81		MN		[+]	**PF0793**	140,9×63,3×20,5		TRW		[+]	**PF0794**	115,5×49,5×17,2	OK039
900															
0.9	01/78→01/86	26	35	BD		[+]	**PF0212**	108,8×47,4×18	OK028						
Albea															
1.2	02→			BSC		[-]	**PF0558**	122,9×53,4×18	OK012						
1.6	02→			BSC		[-]	**PF0558**	122,9×53,4×18	OK012						
Argenta (132A)															
1600	04/81→12/85	72	98	LG	ex Ref. 222.0	[+]	**PF0105**	104×66,4×17	OK030						
1600 i.e	04/81→12/85	66	90	LG	ex Ref. 222.0	[+]	**PF0105**	104×66,4×17	OK030						
2000	06/78→12/85	83	113	LG	ex Ref. 222.0	[+]	**PF0105**	104×66,4×17	OK030						
2000 i.e.	06/81→07/86	90	122	LG	ex Ref. 222.0	[+]	**PF0105**	104×66,4×17	OK030						

		KW	CV	SiS	i	W.i.	MAGNETI MARELLI	W×H×Th (mm)	Extra kit [Opt]	SiS	i	W.i.	MAGNETI MARELLI	W×H×Th (mm)	Extra kit [Opt]
FIAT															
Argenta (132A)															
2000 Volumex	06/84 → 07/85	99	135	LG	ex Ref. 222.0	[+]	**PF0105**	104×66,4×17	OK030						
2500 Diesel	06/81 → 11/85	53	72	LG	ex Ref. 222.0	[+]	**PF0105**	104×66,4×17	OK030						
2500 Turbodiesel	07/83 → 08/85	66	90	LG	ex Ref. 222.0	[+]	**PF0105**	104×66,4×17	OK030						
Barchetta (183)															
1.8 16V	04/95 →	96	130	ATE		[+]	**PF0104**	156,4×52,5×17,8		LG		[-]	**PF0783**	87,2×44,5×14,3	OK032
1.8 16V	04/95 →	96	130	ATE		[+]	**PF0104**	156,4×52,5×17,8		LG		[-]	**PF0106**	86,8×44,6×14,2	OK032
1.8 16V	04/95 →	96	130	ATE		[+]	**PF0102**	156,4×52,5×17,8		LG		[-]	**PF0106**	86,8×44,6×14,2	OK032
Brava (182)															
1.2 16V	12/98 → 10/00	60	82	ATE		[+]	**PF0222**	151,4×52×18							
1.2 16V	10/00 → 10/01	59	80	ATE		[+]	**PF0222**	151,4×52×18							
1.4	95 → 02			ATE		[+]	**PF0782**	151,4×52×18		LG		[-]	**PF0783**	87,2×44,5×14,3	OK032
1.4	10/95 → 10/01	55	75	ATE	(182.BG)	[+]	**PF0222**	151,4×52×18							
1.4 12V	10/95 → 08/98	59	80	ATE	(182.BA)	[+]	**PF0222**	151,4×52×18							
1.6	95 → 02			ATE		[+]	**PF0782**	151,4×52×18		LG		[-]	**PF0783**	87,2×44,5×14,3	OK032
1.6 16V	10/95 → 10/01	66	90	ATE	(182.BH)	[+]	**PF0102**	156,4×52,5×17,8		LG		[-]	**PF0783**	87,2×44,5×14,3	OK032
1.6 16V	02/96 → 10/01	76	103	ATE	(182.BB)	[+]	**PF0222**	151,4×52×18							
1.6 16V	01/99 → 12/02	76	103	ATE	(182.BU)	[+]	**PF0222**	151,4×52×18							
1.8 GT 16V	10/95 → 10/01	83	113	ATE	(182.BC)	[+]	**PF0104**	156,4×52,5×17,8		LG		[-]	**PF0783**	87,2×44,5×14,3	OK032
1.8 GT 16V	10/95 → 10/01	83	113	ATE	(182.BC)	[+]	**PF0102**	156,4×52,5×17,8		LG		[-]	**PF0783**	87,2×44,5×14,3	OK032
1.9 TD	03/96 → 10/01	55	75	ATE	(182.BF)	[+]	**PF0222**	151,4×52×18							
1.9 TD	03/96 → 10/01	74	100	ATE	(182.BF)	[+]	**PF0102**	156,4×52,5×17,8		LG		[-]	**PF0783**	87,2×44,5×14,3	OK032
1.9 JTD	12/98 → 10/01	77	105	ATE		[+]	**PF0102**	156,4×52,5×17,8		LG		[-]	**PF0783**	87,2×44,5×14,3	OK032
1.9 D	10/95 → 10/01	48	65	ATE		[+]	**PF0782**	151,4×52×18		LG		[-]	**PF0783**	87,2×44,5×14,3	OK032
1.9 JTD	09/00 → 10/01	74	100	ATE		[+]	**PF0102**	156,4×52,5×17,8		LG		[-]	**PF0783**	87,2×44,5×14,3	OK032
Bravo I (182)															
1.2 16V	12/98 → 10/00	60	82	ATE		[+]	**PF0782**	151,4×52×18							
1.2 16V	10/00 → 10/01	59	80	ATE		[+]	**PF0222**	151,4×52×18							
1.4	10/95 → 10/01	59	80	ATE	(182.AA)	[+]	**PF0782**	151,4×52×18		LG		[-]	**PF0783**	87,2×44,5×14,3	OK032
1.4	10/95 → 10/01	55	75	ATE	(182.AG)	[+]	**PF0222**	151,4×52×18							
1.6	09/00 → 02/02	76	103	ATE		[+]	**PF0102**	156,4×52,5×17,8		LG		[-]	**PF0783**	87,2×44,5×14,3	OK032
1.6	09/00 → 02/02	76	103	ATE		[+]	**PF0782**	151,4×52×18		LG		[-]	**PF0783**	87,2×44,5×14,3	OK032
1.6 16V	03/96 → 10/01	76	103	ATE	(182.AB)	[+]	**PF0222**	151,4×52×18							
1.8 GT	10/95 → 10/01	83	113	ATE	(182.AC)	[+]	**PF0104**	156,4×52,5×17,8		LG		[-]	**PF0783**	87,2×44,5×14,3	OK032
1.8 GT	10/95 → 10/01	83	113	ATE	(182.AC)	[+]	**PF0102**	156,4×52,5×17,8		LG		[-]	**PF0783**	87,2×44,5×14,3	OK032
1.9 D	10/95 → 10/01	48	65	ATE		[+]	**PF0222**	151,4×52×18							
1.9 JTD	12/98 → 10/01	77	105	ATE		[+]	**PF0102**	156,4×52,5×17,8		LG		[-]	**PF0783**	87,2×44,5×14,3	OK032
1.9 JTD	09/00 → 10/01	74	100	ATE		[+]	**PF0782**	151,4×52×18		LG		[-]	**PF0783**	87,2×44,5×14,3	OK032
1.9 TD	03/96 → 10/01	74	100	ATE	(182.AF)	[+]	**PF0102**	156,4×52,5×17,8		LG		[-]	**PF0783**	87,2×44,5×14,3	OK032
1.9 TD	03/96 → 10/01	55	75	ATE	(182.AF)	[+]	**PF0222**	151,4×52×18							
2.0 HGT 20V	10/95 → 07/98	108	147	ATE	(182.AD)	[+]	**PF0101**	155,1×59,1×19,3		LG		[-]	**PF0783**	87,2×44,5×14,3	OK032
2.0 HGT 20V	07/98 → 10/01	113	154	ATE	(182AQ)	[+]	**PF0103**	155,1×59,1×19,3		LG		[-]	**PF0783**	87,2×44,5×14,3	OK032

		KW	CV	SiS	i	W.i.	MAGNETI MARELLI	W×H×Th (mm)	Extra kit [Opt]	SiS	i	W.i.	MAGNETI MARELLI	W×H×Th (mm)	Extra kit [Opt]
FIAT															
Bravo I (182)															
2.0i 16V HGT	97 → 02			ATE	pinza post. in alluminio	[+]	**PF0101**	155,1×59,1×19,3		LG		[-]	**PF0106**	86,8×44,6×14,2	OK032
Bravo II (198)															
1.4	04/07 →	66	90	BSC		[+]	**PF0126**	122,9×53,4×18	OK012/ OK040	BSC		[+]	**PF0125**	94,9×42,8×16,4	OK033/ OK040
1.4	07/10 →	66	90	BSC	+2 w.i.	[+]	**PF0560**	122,9×53,4×18	OK012/ OK040	BSC	+2 w.i.	[+]	**PF0568**	94,9×42,8×17,4	OK033/ OK040
1.4 16V	03/08 →	103	140	BSC		[+]	**PF0126**	122,9×53,4×18	OK012/ OK040	BSC		[-]	**PF0125**	94,9×42,8×16,4	OK033/ OK040
1.4 16V	07/10 →	103	140	BSC	+2 w.i.	[+]	**PF0560**	122,9×53,4×18	OK012/ OK040	BSC	+2 w.i.	[+]	**PF0568**	94,9×42,8×17,4	OK033/ OK040
1.4 LPG	11/09 →	66	90	BSC		[+]	**PF0126**	122,9×53,4×18	OK012/ OK040	BSC		[-]	**PF0125**	94,9×42,8×16,4	OK033/ OK040
1.4 LPG	07/10 →	66	90	BSC	+2 w.i.	[+]	**PF0560**	122,9×53,4×18	OK012/ OK040	BSC	+2 w.i.	[+]	**PF0568**	94,9×42,8×17,4	OK033/ OK040
1.4 T-Jet	09/07 →	88	120	BSC		[+]	**PF0214**	137×57,3×19	OK033/ OK038	BSC		[-]	**PF0125**	94,9×42,8×16,4	OK033/ OK040
1.4 T-Jet	07/10 →	88	120	BSC		[+]	**PF0214**	137×57,3×19	OK033/ OK038	BSC	+2 w.i.	[+]	**PF0568**	94,9×42,8×17,4	OK033/ OK040
1.4 T-Jet	09/07 →	110	150	BSC		[+]	**PF0563**	151×57,4×19	OK012/ OK038	BSC		[-]	**PF0125**	94,9×42,8×16,4	OK033/ OK040
1.4 T-Jet	07/10 →	110	150	BSC		[+]	**PF0563**	151×57,4×19	OK012/ OK038	BSC	+2 w.i.	[+]	**PF0568**	94,9×42,8×17,4	OK033/ OK040
1.4 T-Jet	10 →	110	150	BSC	+2 w.i.	[+]	**PF0124**	151×57,4×19	OK012/ OK038	BSC	+2 w.i.	[+]	**PF0568**	94,9×42,8×17,4	OK033/ OK040
1.4 T-Jet	06/11 →	112	152	BSC		[+]	**PF0563**	151×57,4×19	OK012/ OK038	BSC		[-]	**PF0125**	94,9×42,8×16,4	OK033/ OK040
1.4 T-Jet	07/10 →	112	152	BSC	+2 w.i.	[+]	**PF0124**	151×57,4×19	OK012/ OK038	BSC	+2 w.i.	[+]	**PF0568**	94,9×42,8×17,4	OK033/ OK040
1.6 D Multijet	03/08 →	66	90	BSC		[+]	**PF0214**	137×57,3×19	OK033/ OK038	BSC		[-]	**PF0125**	94,9×42,8×16,4	OK033/ OK040
1.6 D Multijet	07/10 →	66	90	BSC		[+]	**PF0214**	137×57,3×19	OK033/ OK038	BSC	+2 w.i.	[+]	**PF0568**	94,9×42,8×17,4	OK033/ OK040
1.6 D Multijet	03/08 →	77	105	BSC		[+]	**PF0214**	137×57,3×19	OK033/ OK038	BSC		[-]	**PF0125**	94,9×42,8×16,4	OK033/ OK040
1.6 D Multijet	07/10 →	77	105	BSC		[+]	**PF0214**	137×57,3×19	OK033/ OK038	BSC	+2 w.i.	[+]	**PF0568**	94,9×42,8×17,4	OK033/ OK040
1.6 D Multijet	03/08 →	88	120	BSC		[+]	**PF0214**	137×57,3×19	OK033/ OK038	BSC		[-]	**PF0125**	94,9×42,8×16,4	OK033/ OK040
1.6 D Multijet	07/10 →	88	120	BSC		[+]	**PF0214**	137×57,3×19	OK033/ OK038	BSC	+2 w.i.	[+]	**PF0568**	94,9×42,8×17,4	OK033/ OK040
1.8 16V	09/08 →	96	130	BSC		[+]	**PF0214**	137×57,3×19	OK033/ OK038	BSC		[-]	**PF0125**	94,9×42,8×16,4	OK033/ OK040

		KW	CV	SiS	i	W.i.	MAGNETI MARELLI	W×H×Th (mm)	Extra kit [Opt]	SiS	i	W.i.	MAGNETI MARELLI	W×H×Th (mm)	Extra kit [Opt]
FIAT															
Bravo II (198)															
1.8 16V	07/10 →	96	130	BSC		[+]	**PF0214**	137×57,3×19	OK033/ OK038	BSC	+2 w.i.	[+]	**PF0568**	94,9×42,8×17,4	OK033/ OK040
1.9 D Multijet	04/07 → 12/08	66	90	BSC		[+]	**PF0214**	137×57,3×19	OK033/ OK038	BSC		[-]	**PF0125**	94,9×42,8×16,4	OK033/ OK040
1.9 D Multijet	04/07 →	110	150	BSC		[+]	**PF0214**	137×57,3×19	OK033/ OK038	BSC		[-]	**PF0125**	94,9×42,8×16,4	OK033/ OK040
1.9 D Multijet	07/10 →	110	150	BSC		[+]	**PF0214**	137×57,3×19	OK033/ OK038	BSC	+2 w.i.	[+]	**PF0568**	94,9×42,8×17,4	OK033/ OK040
1.9 D Multijet	11/06 →	85	116	BSC		[+]	**PF0214**	137×57,3×19	OK033/ OK038	BSC		[-]	**PF0125**	94,9×42,8×16,4	OK033/ OK040
1.9 D Multijet	07/10 →	85	116	BSC		[+]	**PF0214**	137×57,3×19	OK033/ OK038	BSC	+2 w.i.	[+]	**PF0568**	94,9×42,8×17,4	OK033/ OK040
1.9 D Multijet	04/07 →	88	120	BSC		[+]	**PF0214**	137×57,3×19	OK033/ OK038	BSC		[-]	**PF0125**	94,9×42,8×16,4	OK033/ OK040
1.9 D Multijet	07/10 →	88	120	BSC		[+]	**PF0214**	137×57,3×19	OK033/ OK038	BSC	+2 w.i.	[+]	**PF0568**	94,9×42,8×17,4	OK033/ OK040
2.0 D Multijet	09/08 →	120	163	BSC		[+]	**PF0214**	137×57,3×19	OK033/ OK038	BSC		[-]	**PF0125**	94,9×42,8×16,4	OK033/ OK040
2.0 D Multijet	07/10 →	120	163	BSC		[+]	**PF0214**	137×57,3×19	OK033/ OK038	BSC	+2 w.i.	[+]	**PF0568**	94,9×42,8×17,4	OK033/ OK040
2.0 D Multijet	09/08 →	121	165	BSC		[+]	**PF0214**	137×57,3×19	OK033/ OK038	BSC		[-]	**PF0125**	94,9×42,8×16,4	OK033/ OK040
2.0 D Multijet	07/10 →	121	165	BSC		[+]	**PF0214**	137×57,3×19	OK033/ OK038	BSC	+2 w.i.	[+]	**PF0568**	94,9×42,8×17,4	OK033/ OK040
Bravo II Van (198)															
1.6 Multijet	03/08 →	77	105	BSC		[+]	**PF0214**	137×57,3×19	OK033/ OK038	BSC		[-]	**PF0125**	94,9×42,8×16,4	OK033/ OK040
Cinquecento (170)															
0.7	12/91 → 01/96	23	31	BD	(170AA)	[-]	**PF0223**	115×55,4×17							
0.7i	07/94 → 01/98	22	30	BD	(170AD)	[-]	**PF0223**	115×55,4×17							
0.9	07/91 → 12/93	30	41	BD	(170AB)	[-]	**PF0223**	115×55,4×17							
0.9 i.e.	07/91 → 12/93	30	41	BD	(170AC)	[-]	**PF0223**	115×55,4×17							
0.9 i.e. S	07/91 → 07/99	29	40	BD	(170AF, 170CF)	[-]	**PF0223**	115×55,4×17							
1.1 Sporting	10/94 → 01/98	40	54	BD	(170AH)	[-]	**PF0223**	115×55,4×17							
Coupé (FA/175)															
1.8 16V	03/96 → 08/00	96	131	LG		[+]	**PF0122**	129,9×59×19	OK030	LG		[-]	**PF0783**	87,2×44,5×14,3	OK032
2.0 16V	11/93 → 08/96	102	139	LG		[+]	**PF0122**	129,9×59×19	OK030	LG		[-]	**PF0783**	87,2×44,5×14,3	OK032
2.0 20V	08/96 → 04/98	108	147	ATE		[+]	**PF0101**	155,1×59,1×19,3		LG		[-]	**PF0783**	87,2×44,5×14,3	OK032
2.0 20V	04/98 → 08/00	113	154	ATE		[+]	**PF0101**	155,1×59,1×19,3		LG		[-]	**PF0783**	87,2×44,5×14,3	OK032
2.0 16V Turbo	11/93 → 08/96	140	190	BR		[+]	**PF0107**	109,7×69,3×17,8		LG		[-]	**PF0106**	86,8×44,6×14,2	OK032
2.0 20V Turbo	08/96 → 08/00	162	220	ATE		[+]	**PF0101**	155,1×59,1×19,3		LG		[-]	**PF0106**	86,8×44,6×14,2	OK032

		KW	CV	SiS	i	W.i.	MAGNETI MARELLI	W×H×Th (mm)	Extra kit [Opt]	SiS	i	W.i.	MAGNETI MARELLI	W×H×Th (mm)	Extra kit [Opt]
FIAT															
Croma (154)															
1.9 TD	88→									LG	(AE)	[-]	**PF0116**	87×66,7×16,5	OK032
1.9 TD	88→									LG	(AE)	[-]	**PF0116**	87×66,7×16,5	OK032
2.0 CHT	86→									LG		[-]	**PF0116**	87×66,7×16,5	OK032
2.0 I S/SL IE	88→									LG		[-]	**PF0116**	87×66,7×16,5	OK032
2.0i E T.	88→									LG		[-]	**PF0116**	87×66,7×16,5	OK032
2.0i E T.	88→									LG		[-]	**PF0116**	87×66,7×16,5	OK032
2.0i iE/iE	86→									LG		[-]	**PF0116**	87×66,7×16,5	OK032
2.0i SX ie	90→									LG		[-]	**PF0116**	87×66,7×16,5	OK032
2.0i T. iE	86→									LG		[-]	**PF0116**	87×66,7×16,5	OK032
2.5 D	86→89									LG		[-]	**PF0116**	87×66,7×16,5	OK032
2.5 TD	89→									LG		[-]	**PF0116**	87×66,7×16,5	OK032
2.5 TD	86→89									LG		[-]	**PF0116**	87×66,7×16,5	OK032
Croma II (194)															
1.8 16V	12/05→11	103	140	LG		[+]	**PF0224**	146,7×60×19	OK030	LG	Solid Disc	[-]	**PF0225**	105,5×46,6×16,8	OK039/ OK045
1.8 16V	12/05→11	103	140	LG		[+]	**PF0224**	146,7×60×19	OK030	LG	Vented Disc	[-]	**PF0225**	105,5×46,6×16,8	OK039/ OK046
1.8	03/06→11			ATE		[o]	**PF0588**	155,2×69×20,2		LG	Solid Disc	[-]	**PF0225**	105,5×46,6×16,8	OK039/ OK045
1.8	03/06→11			ATE		[o]	**PF0588**	155,2×69×20,2		LG	Vented Disc	[-]	**PF0225**	105,5×46,6×16,8	OK039/ OK046
1.9 Mjt	07/05→11			ATE		[o]	**PF0588**	155,2×69×20,2		LG	Solid Disc	[-]	**PF0225**	105,5×46,6×16,8	OK039/ OK045
1.9 Mjt	07/05→11			ATE		[o]	**PF0588**	155,2×69×20,2		LG	Vented Disc	[-]	**PF0225**	105,5×46,6×16,8	OK039/ OK046
1.9 Mjt 16V	07/05→11			LG		[+]	**PF0224**	146,7×60×19	OK030	LG	Solid Disc	[-]	**PF0225**	105,5×46,6×16,8	OK039/ OK045
1.9 Mjt 16V	07/05→11			LG		[+]	**PF0224**	146,7×60×19	OK030	LG	Vented Disc	[-]	**PF0225**	105,5×46,6×16,8	OK039/ OK046
1.9 8V	03/06→11			ATE		[o]	**PF0588**	155,2×69×20,2		LG	Solid Disc	[-]	**PF0225**	105,5×46,6×16,8	OK039/ OK045
1.9 8V	03/06→11			ATE		[o]	**PF0588**	155,2×69×20,2		LG	Vented Disc	[-]	**PF0225**	105,5×46,6×16,8	OK039/ OK046
2.2 16V	06/05→11	108	147	ATE		[o]	**PF0588**	155,2×69×20,2		LG	Solid Disc	[-]	**PF0225**	105,5×46,6×16,8	OK039/ OK045
2.2 16V	06/05→11	108	147	ATE		[o]	**PF0588**	155,2×69×20,2		LG	Vented Disc	[-]	**PF0225**	105,5×46,6×16,8	OK039/ OK046
2.4 D Multijet	06/05→11	147	200	LG		[+]	**PF0224**	146,7×60×19	OK030	LG	Solid Disc	[-]	**PF0225**	105,5×46,6×16,8	OK039/ OK045
2.4 D Multijet	06/05→11	147	200	LG		[+]	**PF0224**	146,7×60×19	OK030	LG	Vented Disc	[-]	**PF0225**	105,5×46,6×16,8	OK039/ OK046

		KW	CV	SiS	i	W.i.	MAGNETI MARELLI	W×H×Th (mm)	Extra kit [Opt]	SiS	i	W.i.	MAGNETI MARELLI	W×H×Th (mm)	Extra kit [Opt]
FIAT															
Doblò Cargo (223)															
1.2	03/01 →	48	65	ATE	(223ZXA1A)	[-]	**PF0227**	150,3×52,5×18		LG		[-]	**PF0216**	95,8×43,9×13,7	OK039
1.2 16V	09/05 →	59	80	ATE		[-]	**PF0227**	150,3×52,5×18		LG		[-]	**PF0216**	95,8×43,9×13,7	OK039
1.3 D Multijet	10/05 →	55	75	ATE		[-]	**PF0227**	150,3×52,5×18		LG		[-]	**PF0216**	95,8×43,9×13,7	OK039
1.3 JTD 16V	05/04 →	51	70	ATE		[-]	**PF0227**	150,3×52,5×18		LG		[-]	**PF0216**	95,8×43,9×13,7	OK039
1.3 JTD 16V Multijet	08/06 →	62	84	ATE		[-]	**PF0227**	150,3×52,5×18		LG		[-]	**PF0216**	95,8×43,9×13,7	OK039
1.4	08/09 →	63	86	ATE		[-]	**PF0227**	150,3×52,5×18		LG		[-]	**PF0216**	95,8×43,9×13,7	OK039
1.4	10/05 →	57	77	ATE		[-]	**PF0227**	150,3×52,5×18		LG		[-]	**PF0216**	95,8×43,9×13,7	OK039
1.6 16V	10/01 →	76	103	ATE	(223ZXD1A)	[-]	**PF0227**	150,3×52,5×18		LG		[-]	**PF0216**	95,8×43,9×13,7	OK039
1.6 Natural Power	09/02 →	76	103	ATE		[-]	**PF0227**	150,3×52,5×18		LG		[-]	**PF0216**	95,8×43,9×13,7	OK039
1.8	09/05 →	76	103	ATE		[-]	**PF0227**	150,3×52,5×18		LG		[-]	**PF0216**	95,8×43,9×13,7	OK039
1.8	01/06 →	84	114	ATE		[-]	**PF0227**	150,3×52,5×18		LG		[-]	**PF0216**	95,8×43,9×13,7	OK039
1.9 D	03/01 →	46	63	ATE	(223ZXB1A)	[-]	**PF0227**	150,3×52,5×18		LG		[-]	**PF0216**	95,8×43,9×13,7	OK039
1.9 JTD	07/03 →	77	105	ATE		[-]	**PF0227**	150,3×52,5×18		LG		[-]	**PF0216**	95,8×43,9×13,7	OK039
1.9 JTD	10/01 →	74	100	ATE	(223ZXE1A)	[-]	**PF0227**	150,3×52,5×18		LG		[-]	**PF0216**	95,8×43,9×13,7	OK039
1.9 JTD Multijet	12/06 →	88	120	ATE		[-]	**PF0227**	150,3×52,5×18		LG		[-]	**PF0216**	95,8×43,9×13,7	OK039
Doblò II (119)															
1.3 D Multijet	10/05 → 01/10	62	84	BSC		[+]	**PF0214**	137×57,3×19	OK033/ OK038						
1.3 D Multijet	10/05 → 01/10	62	84	BSC		[-]	**PF0228**	137×57,3×19	OK033/ OK038						
1.3 JTD	05/05 → 01/10	55	75	BSC		[+]	**PF0214**	137×57,3×19	OK033/ OK038						
1.3 JTD	05/05 → 01/10	55	75	BSC		[-]	**PF0228**	137×57,3×19	OK033/ OK038						
1.4	08/09 → 01/10	63	86	BSC		[+]	**PF0214**	137×57,3×19	OK033/ OK038						
1.4	10/05 → 01/10	57	77	BSC		[+]	**PF0214**	137×57,3×19	OK033/ OK038						
1.6 Natural Power	09/02 → 01/10	76	103	BSC		[+]	**PF0126**	122,9×53,4×18	OK012/ OK040						
1.6 Natural Power	09/02 → 01/10	76	103	BSC		[-]	**PF0228**	137×57,3×19	OK033/ OK038						
1.8	09/05 → 01/10	76	103	BSC		[+]	**PF0126**	122,9×53,4×18	OK012/ OK040						
1.8	01/06 → 01/10	84	114	BSC		[+]	**PF0126**	122,9×53,4×18	OK012/ OK040						
1.9 JTD	10/01 → 01/10	74	100	BSC	(223AXE1A)	[+]	**PF0214**	137×57,3×19	OK033/ OK038						
1.9 JTD	10/01 → 01/10	74	100	BSC	(223AXE1A)	[-]	**PF0228**	137×57,3×19	OK033/ OK038						
1.9 D Multijet	10/05 → 01/10	88	120	BSC		[+]	**PF0214**	137×57,3×19	OK033/ OK038						

		KW	CV	SiS	i	W.i.	MAGNETI MARELLI	W×H×Th (mm)	Extra kit [Opt]	SiS	i	W.i.	MAGNETI MARELLI	W×H×Th (mm)	Extra kit [Opt]
FIAT															
Doblò II (119)															
1.9 D Multijet	10/05 → 01/10	88	120	BSC		[-]	**PF0228**	137×57,3×19	OK033/ OK038						
Doblò III (152)															
1.4	02/10 →	70	95	BSC		[+]	**PF0214**	137×57,3×19	OK033/ OK038						
1.4	02/10 →	70	95	ATE	Ø Disc 305×28	[+]	**PF0288**	155,2×71,3×20							
1.4 Natural Power	02/10 →	88	120	BSC		[+]	**PF0214**	137×57,3×19	OK033/ OK038						
1.4 Natural Power	02/10 →	88	120	ATE	Ø Disc 305×28	[+]	**PF0288**	155,2×71,3×20							
1.3 D Multijet	02/10 →	66	90	BSC		[+]	**PF0214**	137×57,3×19	OK033/ OK038						
1.3 D Multijet	02/10 →	66	90	ATE	Ø Disc 305×28	[+]	**PF0288**	155,2×71,3×20							
1.6 D 16V Multijet	02/10 →	66	90	BSC		[+]	**PF0214**	137×57,3×19	OK033/ OK038						
1.6 D Multijet	02/10 →	77	105	ATE	Ø Disc 305×28	[+]	**PF0288**	155,2×71,3×20							
1.8 MPI Flex	08/10 →	96	131	ATE		[+]	**PF0288**	155,2×71,3×20							
2.0 D Multijet	02/10 →	99	135	ATE	Ø Disc 305×28	[+]	**PF0288**	155,2×71,3×20							
Doblò Cargo III (263)															
1.3 D Multijet	11/13 →	55	75	BSC		[+]	**PF0214**	137×57,3×19	OK033/ OK038						
1.3 D Multijet	11/13 →	55	75	ATE	Ø Disc 305×28	[+]	**PF0288**	155,2×71,3×20							
1.3 D Multijet	02/10 →	66	90	BSC		[+]	**PF0214**	137×57,3×19	OK033/ OK038						
1.3 D Multijet	02/10 →	66	90	ATE	Ø Disc 305×28	[+]	**PF0288**	155,2×71,3×20							
1.4	02/10 →	70	95	BSC		[+]	**PF0214**	137×57,3×19	OK033/ OK038						
1.4	02/10 →	70	95	ATE	Ø Disc 305×28	[+]	**PF0288**	155,2×71,3×20							
1.4 Flex	01/14 →	63	86	BSC		[+]	**PF0214**	137×57,3×19	OK033/ OK038						
1.4 Flex	01/14 →	63	86	ATE	Ø Disc 305×28	[+]	**PF0288**	155,2×71,3×20							
1.4 Natural Power	06/10 →	88	120	BSC		[+]	**PF0214**	137×57,3×19	OK033/ OK038						
1.4 Natural Power	06/10 →	88	120	ATE	Ø Disc 305×28	[+]	**PF0288**	155,2×71,3×20							

		KW	CV	SiS	i	W.i.	MAGNETI MARELLI	W×H×Th (mm)	Extra kit [Opt]	SiS	i	W.i.	MAGNETI MARELLI	W×H×Th (mm)	Extra kit [Opt]
FIAT															
Doblò Cargo III (263)															
1.6 D Multijet	02/10→	66	90	BSC		[+]	**PF0214**	137×57,3×19	OK033/ OK038						
1.6 D Multijet	02/10→	77	105	ATE	Ø Disc 305×28	[+]	**PF0288**	155,2×71,3×20							
1.6 D Multijet	02/10→	74	100	BSC		[+]	**PF0214**	137×57,3×19	OK033/ OK038						
1.6 Mit	02/10→	99	135	ATE	Ø Disc 305×28	[+]	**PF0288**	155,2×71,3×20							
2.0 D Multijet	02/10→	99	135	ATE	Ø Disc 305×28	[+]	**PF0288**	155,2×71,3×20							
Doblò Cargo Piatto III (263)															
1.3 D Multijet	11/13→	55	75	BSC		[+]	**PF0214**	137×57,3×19	OK033/ OK038						
1.3 D Multijet	11/13→	55	75	ATE	Ø Disc 305×28	[+]	**PF0288**	155,2×71,3×20							
1.4	04/10→	70	95	BSC		[+]	**PF0214**	137×57,3×19	OK033/ OK038						
1.4	04/10→	70	95	ATE	Ø Disc 305×28	[+]	**PF0288**	155,2×71,3×20							
1.3 D Multijet	02/10→	66	90	BSC		[+]	**PF0214**	137×57,3×19	OK033/ OK038						
1.6 D Multijet	02/10→	77	105	BSC		[+]	**PF0214**	137×57,3×19	OK033/ OK038						
1.6 D Multijet	02/11→	74	101	BSC		[+]	**PF0214**	137×57,3×19	OK033/ OK038						
2.0 D Multijet	02/10→	99	135	ATE	Ø Disc 305×28	[+]	**PF0288**	155,2×71,3×20							
Ducato 10-14Q (280)															
1.8	81→93			LG		[+]	**PF0175**	130×71,2×19	OK032						
1.9 D	81→93			LG		[+]	**PF0175**	130×71,2×19	OK032						
1.9 TD	81→93			LG		[+]	**PF0175**	130×71,2×19	OK032						
2.0	81→93			LG		[+]	**PF0175**	130×71,2×19	OK032						
2.5 TD	81→93			LG		[+]	**PF0175**	130×71,2×19	OK032						
2.5 D	81→93			LG		[+]	**PF0175**	130×71,2×19	OK032						
Ducato (230)															
1.9 D 10q	94→11/99			LG		[+]	**PF0789**	145,1×61×19,5	OK030						
1.9 D 10q	12/99→08/01			LG		[+]	**PF0183**	145,1×61×19,5	OK030						
1.9 TD 10q	94→11/99			LG		[+]	**PF0789**	145,1×61×19,5	OK030						
1.9 TD 10q	12/99→08/01			LG		[+]	**PF0183**	145,1×61×19,5	OK030						
2.0 10q	94→11/99			LG		[+]	**PF0789**	145,1×61×19,5	OK030						
2.0 10q	12/99→08/01			LG		[+]	**PF0183**	145,1×61×19,5	OK030						
2.0 18q	94→11/99			LG		[+]	**PF0184**	160×64×19,5	OK030						
2.0 18q	12/99→08/01			LG		[+]	**PF0185**	160×64×19,5	OK030						
2.5 D 10q	94→11/99			LG		[+]	**PF0789**	145,1×61×19,5	OK030						

		KW	CV	SiS	i	W.i.	MAGNETI MARELLI	W×H×Th (mm)	Extra kit [Opt]	SiS	i	W.i.	MAGNETI MARELLI	W×H×Th (mm)	Extra kit [Opt]
FIAT															
Ducato (230)															
2.5 D 10q	12/99 → 08/01			LG		[+]	**PF0183**	145,1×61×19,5	OK030						
2.5 D 14q	94 → 11/99			LG		[+]	**PF0789**	145,1×61×19,5	OK030						
2.5 D 14q	12/99 → 08/01			LG		[+]	**PF0183**	145,1×61×19,5	OK030						
2.5 D 18q	94 → 11/99			LG		[+]	**PF0184**	160×64×19,5	OK030						
2.5 D 18q	12/99 → 08/01			LG		[+]	**PF0185**	160×64×19,5	OK030						
2.5 TD 10q	94 → 11/99			LG		[+]	**PF0789**	145,1×61×19,5	OK030						
2.5 TD 10q	12/99 → 08/01			LG		[+]	**PF0183**	145,1×61×19,5	OK030						
2.5 TD 14q	94 → 11/99			LG		[+]	**PF0789**	145,1×61×19,5	OK030						
2.5 TD 14q	12/99 → 08/01			LG		[+]	**PF0183**	145,1×61×19,5	OK030						
2.5 TD 18q	94 → 11/99			LG		[+]	**PF0184**	160×64×19,5	OK030						
2.5 TD 18q	12/99 → 08/01			LG		[+]	**PF0185**	160×64×19,5	OK030						
2.8 D 10q	94 → 11/99			LG		[+]	**PF0789**	145,1×61×19,5	OK030						
2.8 D 10q	12/99 → 08/01			LG		[+]	**PF0183**	145,1×61×19,5	OK030						
2.8 D 14q	94 → 11/99			LG		[+]	**PF0789**	145,1×61×19,5	OK030						
2.8 D 14q	12/99 → 08/01			LG		[+]	**PF0183**	145,1×61×19,5	OK030						
2.8 D 18q	94 → 11/99			LG		[+]	**PF0184**	160×64×19,5	OK030						
2.8 D 18q	12/99 → 08/01			LG		[+]	**PF0185**	160×64×19,5	OK030						
2.8 TD 18q	94 → 11/99			LG		[+]	**PF0184**	160×64×19,5	OK030						
2.8 TD 18q	12/99 → 08/01			LG		[+]	**PF0185**	160×64×19,5	OK030						
2.8 TDI 10q	94 → 11/99			LG		[+]	**PF0789**	145,1×61×19,5	OK030						
2.8 TDI 10q	12/99 → 08/01			LG		[+]	**PF0183**	145,1×61×19,5	OK030						
2.8 TDI 14q	94 → 11/99			LG		[+]	**PF0789**	145,1×61×19,5	OK030						
2.8 TDI 14q	12/99 → 08/01			LG		[+]	**PF0183**	145,1×61×19,5	OK030						
Ducato 10Q/14Q (244)															
2.0	09/01 → 06			BR		[+]	**PF0186**	140,5×65,9×19,3	OK060/ OK013	BR		[-]	**PF0188**	109,7×49,6×20	OK014
2.0 BipPower	09/01 → 06			BR		[+]	**PF0186**	140,5×65,9×19,3	OK060/ OK013	BR		[-]	**PF0188**	109,7×49,6×20	OK014
2.0 JTD	09/01 → 06			BR		[+]	**PF0186**	140,5×65,9×19,3	OK060/ OK013	BR		[-]	**PF0188**	109,7×49,6×20	OK014
2.3 JTD	09/01 → 06			BR		[+]	**PF0186**	140,5×65,9×19,3	OK060/ OK013	BR		[-]	**PF0188**	109,7×49,6×20	OK014
2.8 JTD	09/01 → 06			BR		[+]	**PF0186**	140,5×65,9×19,3	OK060/ OK013	BR		[-]	**PF0188**	109,7×49,6×20	OK014
Ducato 18Q (244)															
2.0	09/01 → 06			BR		[+]	**PF0187**	164,8×69,3×19,3	OK060/ OK013	BR		[-]	**PF0188**	109,7×49,6×20	OK014
2.0 BipPower	09/01 → 06			BR		[+]	**PF0187**	164,8×69,3×19,3	OK060/ OK013	BR		[-]	**PF0188**	109,7×49,6×20	OK014
2.0 JTD	09/01 → 06			BR		[+]	**PF0187**	164,8×69,3×19,3	OK060/ OK013	BR		[-]	**PF0188**	109,7×49,6×20	OK014
2.3 JTD	09/01 → 06			BR		[+]	**PF0187**	164,8×69,3×19,3	OK060/ OK013	BR		[-]	**PF0188**	109,7×49,6×20	OK014

		KW	CV	SiS	i	W.i.	MAGNETI MARELLI	W×H×Th (mm)	Extra kit [Opt]	SiS	i	W.i.	MAGNETI MARELLI	W×H×Th (mm)	Extra kit [Opt]
FIAT															
Ducato 18Q (244)															
2.8 JTD	09/01 → 06			BR		[+]	**PF0187**	164,8×69,3×19,3	OK060/ OK013	BR		[-]	**PF0188**	109,7×49,6×20	OK014
Ducato (250)															
11Q	06/06 →			BR		[+]	**PF0189**	169,3×61,5×19,2	OK060/ OK053	BR		[-]	**PF0191**	137×48,8×19	OK012/ OK038
11Q	06/11 →			BR	+2 w.i.	[+]	**PF0642**	169,3×61,5×19,2	OK060/ OK053	BR		[-]	**PF0191**	137×48,8×19	OK012/ OK038
15Q	06/06 →			BR		[+]	**PF0189**	169,3×61,5×19,2	OK060/ OK053	BR		[-]	**PF0191**	137×48,8×19	OK012/ OK038
15Q	06/11 →			BR	+2 w.i.	[+]	**PF0642**	169,3×61,5×19,2	OK060/ OK053	BR		[-]	**PF0191**	137×48,8×19	OK012/ OK038
17Q	06/06 →			BR	Light	[+]	**PF0189**	169,3×61,5×19,2	OK060/ OK052	BR		[-]	**PF0191**	137×48,8×19	OK012/ OK038
17Q	06/11 →			BR	Light/+2 w.i.	[+]	**PF0642**	169,3×61,5×19,2	OK060/ OK052	BR		[-]	**PF0191**	137×48,8×19	OK012/ OK038
17Q	06/06 →			BR	Heavy	[+]	**PF0190**	169,3×69,2×19	OK060/ OK051	BR		[-]	**PF0191**	137×48,8×19	OK012/ OK038
17Q	07/11 →			BR	Heavy/+2 w.i.	[+]	**PF0643**	169,3×69,2×19	OK060/ OK051	BR		[-]	**PF0191**	137×48,8×19	OK012/ OK038
20Q	06/06 →			BR		[+]	**PF0190**	169,3×69,2×19	OK060/ OK066	BR		[-]	**PF0191**	137×48,8×19	OK012/ OK038
20Q	07/11 →			BR	+2 w.i.	[+]	**PF0643**	169,3×69,2×19	OK060/ OK066	BR		[-]	**PF0191**	137×48,8×19	OK012/ OK038
Ducato FLP 250 (MY14)															
30Q	05/14 →			BR	Ø 280×24	[+]	**PF0642**	169,3×61,5×19,2	OK060						
30Q	05/14 →			BR	Ø Disc 280×24	[+]	**PF0642**	169,3×61,5×19,2	OK060						
33Q	05/14 →			BR	Ø 280×24	[+]	**PF0642**	169,3×61,5×19,2	OK060						
33Q	05/14 →			BR	Ø Disc 280×24	[+]	**PF0642**	169,3×61,5×19,2	OK060						
35Q Light	05/14 →			BR	Ø 280×28	[+]	**PF0642**	169,3×61,5×19,2	OK060						
35Q Light	05/14 →			BR	Ø Disc 280×24	[+]	**PF0642**	169,3×61,5×19,2	OK060						
Fiorino (127)															
1050	01/80 → 12/87	37	50	ATE		[-]	**PF0807**	151,5×49×17,8							
Fiorino (146/147)															
1.3	93 → 07			ATE		[-]	**PF0229**	151,5×49×17,8							
1.4	93 → 07			ATE		[-]	**PF0229**	151,5×49×17,8							
1.6	93 → 07			ATE		[-]	**PF0229**	151,5×49×17,8							
1.6 Combi	93 → 07			ATE		[-]	**PF0807**	151,5×49×17,8							
1.7 D	93 → 07			ATE		[-]	**PF0229**	151,5×49×17,8							

		KW	CV	SiS	i	W.i.	MAGNETI MARELLI	W×H×Th (mm)	Extra kit [Opt]	SiS	i	W.i.	MAGNETI MARELLI	W×H×Th (mm)	Extra kit [Opt]
FIAT															
Fiorino Pick up (146)															
1.6 Pick-up	93 → 07			ATE		[-]	**PF0807**	151,5×49×17,8							
1.7 TD Pick-up	97 → 07			ATE		[-]	**PF0229**	151,5×49×17,8							
Fiorino II (225)															
1.3 D Multijet	07/09 →	70	95	BSC		[+]	**PF0430**	122,9×53,4×18	OK012						
1.3 D Multijet	07/09 →	70	95	BSC	+2 w.i.	[+]	**PF0560**	122,9×53,4×18	OK012/ OK040						
1.3 D Multijet	02/08 →	55	75	BSC		[+]	**PF0430**	122,9×53,4×18	OK012						
1.3 D Multijet	02/08 →	55	75	BSC	+2 w.i.	[+]	**PF0560**	122,9×53,4×18	OK012/ OK040						
1.3 MPI	01/07 →	52	71	BSC		[+]	**PF0430**	122,9×53,4×18	OK012						
1.3 MPI	01/07 →	52	71	BSC	+2 w.i.	[+]	**PF0560**	122,9×53,4×18	OK012/ OK040						
1.4 Flex	11/13 →	65	88	BSC	+2 w.i.	[+]	**PF0560**	122,9×53,4×18	OK012/ OK040						
1.4	02/08 →	54	73	BSC		[+]	**PF0430**	122,9×53,4×18	OK012						
1.4	02/08 →	54	73	BSC	+2 w.i.	[+]	**PF0560**	122,9×53,4×18	OK012/ OK040						
1.4	11/13 →	63	85	BSC	+2 w.i.	[+]	**PF0560**	122,9×53,4×18	OK012/ OK040						
1.4 Natural Power	10/09 →	57	78	BSC		[+]	**PF0430**	122,9×53,4×18	OK012						
1.4 Natural Power	10/09 →	57	78	BSC	+2 w.i.	[+]	**PF0560**	122,9×53,4×18	OK012/ OK040						
Freemont (JC)															
2.0 JTD	08/11 →	100	136	ST		[+]	**PF0211**	146×64×18		LG		[+]	**PF0210**	116,7×52,6×17	
2.0 JTD	08/11 →	103	140	ST		[+]	**PF0211**	146×64×18		LG		[+]	**PF0210**	116,7×52,6×17	
2.0 JTD	08/11 →	120	163	ST		[+]	**PF0211**	146×64×18		LG		[+]	**PF0210**	116,7×52,6×17	
2.0 JTD	08/11 →	120	163	ST	4x4	[+]	**PF0211**	146×64×18		LG		[+]	**PF0210**	116,7×52,6×17	
2.0 JTD	08/11 →	125	170	ST		[+]	**PF0211**	146×64×18		LG		[+]	**PF0210**	116,7×52,6×17	
2.0 JTD	08/11 →	125	170	ST	4x4	[+]	**PF0211**	146×64×18		LG		[+]	**PF0210**	116,7×52,6×17	
2.4	08/12 →	126	171	ST		[+]	**PF0211**	146×64×18		LG		[+]	**PF0210**	116,7×52,6×17	
2.4	08/12 →	129	175	ST		[+]	**PF0211**	146×64×18		LG		[+]	**PF0210**	116,7×52,6×17	
2.4 Flexfuel	01/12 →	127	173	ST		[+]	**PF0211**	146×64×18		LG		[+]	**PF0210**	116,7×52,6×17	
3.6 V6	08/11 →	206	280	ST		[+]	**PF0211**	146×64×18		LG		[+]	**PF0210**	116,7×52,6×17	
3.6 V6	08/11 →	203	280	ST	4x4	[+]	**PF0211**	146×64×18		LG		[+]	**PF0210**	116,7×52,6×17	
Grande Punto (199)															
1.2	10/05 →	48	65	BSC		[+]	**PF0123**	122,9×53,4×18	OK012/ OK040	BSC		[-]	**PF0230**	102×47,1×17,2	OK033/ OK040
1.2	09/10 →	51	69	BSC		[+]	**PF0123**	122,9×53,4×18	OK012/ OK040	BSC		[-]	**PF0230**	102×47,1×17,2	OK033/ OK040
1.2	09/06 →	50	68	BSC		[+]	**PF0123**	122,9×53,4×18	OK012/ OK040	BSC		[-]	**PF0230**	102×47,1×17,2	OK033/ OK040
1.3 D Multijet	10/05 →	55	75	BSC		[+]	**PF0123**	122,9×53,4×18	OK012/ OK040	BSC		[-]	**PF0230**	102×47,1×17,2	OK033/ OK040

		KW	CV													
				SiS	i	W.i.	MAGNETI MARELLI	W×H×Th (mm)	Extra kit [Opt]	SiS	i	W.i.	MAGNETI MARELLI	W×H×Th (mm)	Extra kit [Opt]
FIAT																
Grande Punto (199)																
1.3 D Multijet	10/05→	66	90	BSC		[+]	**PF0214**	137×57,3×19	OK033/ OK038	BSC		[-]	**PF0230**	102×47,1×17,2	OK033/ OK040
1.4	06/06→	55	75	BSC		[+]	**PF0123**	122,9×53,4×18	OK012/ OK040	BSC		[-]	**PF0230**	102×47,1×17,2	OK033/ OK040
1.4	10/05→	57	77	BSC		[+]	**PF0123**	122,9×53,4×18	OK012/ OK040	BSC		[-]	**PF0230**	102×47,1×17,2	OK033/ OK040
1.4 16V	10/05→	70	95	BSC		[+]	**PF0123**	122,9×53,4×18	OK012/ OK040	BSC		[-]	**PF0230**	102×47,1×17,2	OK033/ OK040
1.4 Flex	04/08→	63	86	BSC		[+]	**PF0123**	122,9×53,4×18	OK012/ OK040	BSC		[-]	**PF0230**	102×47,1×17,2	OK033/ OK040
1.4 LPG	12/08→	57	78	BSC		[+]	**PF0123**	122,9×53,4×18	OK012/ OK040	BSC		[-]	**PF0230**	102×47,1×17,2	OK033/ OK040
1.4 T-Jet	09/07→	88	120	BSC		[+]	**PF0214**	137×57,3×19	OK033/ OK038	BSC		[-]	**PF0230**	102×47,1×17,2	OK033/ OK040
1.4 Natural Power	07/08→	57	78	BSC	+2 w.i.	[+]	**PF0560**	122,9×53,4×18	OK012/ OK040	BSC		[-]	**PF0230**	102×47,1×17,2	OK033/ OK040
1.6 D Multijet	07/08→	88	120	BSC		[+]	**PF0214**	137×57,3×19	OK033/ OK038	BSC		[-]	**PF0230**	102×47,1×17,2	OK033/ OK040
1.6 Flex	09/08→	85	117	BSC		[+]	**PF0214**	137×57,3×19	OK033/ OK038	BSC		[-]	**PF0230**	102×47,1×17,2	OK033/ OK040
1.6 Flex	09/08→	85	117	BSC		[+]	**PF0214**	137×57,3×19	OK033/ OK038	BSC		[-]	**PF0230**	102×47,1×17,2	OK033/ OK040
1.9 D Multijet	10/05→	88	120	BSC		[+]	**PF0214**	137×57,3×19	OK033/ OK038	BSC		[-]	**PF0230**	102×47,1×17,2	OK033/ OK040
1.9 D Multijet	10/05→	96	130	BSC		[+]	**PF0214**	137×57,3×19	OK033/ OK038	BSC		[-]	**PF0230**	102×47,1×17,2	OK033/ OK040
Grande Punto Abarth (199)																
1.4 Abarth	12/07→	114	155	BR		[+]	**PF0127**	124,7×70,7×15,1		BSC		[-]	**PF0230**	102×47,1×17,2	OK033/ OK040
1.4 Abarth	12/07→	114	155	BR	+2 w.i.	[+]	**PF0591**	124,7×70,7×15,1		BSC	+w.i.	[+]	**PF0446**	102×47,1×17,2	OK012/ OK040
1.4 Abarth	12/07→	132	180	BR		[+]	**PF0127**	124,7×70,7×15,1		BSC		[-]	**PF0230**	102×47,1×17,2	OK033/ OK040
1.4 Abarth	12/07→	132	180	BR	+2 w.i.	[+]	**PF0591**	124,7×70,7×15,1		BSC	+w.i.	[+]	**PF0446**	102×47,1×17,2	OK012/ OK040
Grande Punto Furgonato (199)																
1.4	04/08→	57	78	BSC		[+]	**PF0123**	122,9×53,4×18	OK012/ OK040	BSC		[-]	**PF0230**	102×47,1×17,2	OK033/ OK040
1.4 Natural Power	03/09→	57	78	BSC		[+]	**PF0123**	122,9×53,4×18	OK012/ OK040	BSC		[-]	**PF0230**	102×47,1×17,2	OK033/ OK040
1.4 LPG	03/09→	57	78	BSC		[+]	**PF0123**	122,9×53,4×18	OK012/ OK040	BSC		[-]	**PF0230**	102×47,1×17,2	OK033/ OK040

		KW	CV	SiS	i	W.i.	MAGNETI MARELLI	W×H×Th (mm)	Extra kit [Opt]	SiS	i	W.i.	MAGNETI MARELLI	W×H×Th (mm)	Extra kit [Opt]
FIAT															
Grande Punto Van (199)															
1.3 D Multijet	04/08 →	55	75	BSC		[+]	**PF0123**	122,9×53,4×18	OK012/ OK040	BSC		[-]	**PF0230**	102×47,1×17,2	OK033/ OK040
Grande Punto Evo (199)															
0.9 Bifuel	11/11 → 03/12	63	86	ATE	Vented Disc/ 257×22	[+]	**PF0427**	149,3×52,5×17,4							
1.2	10/09 → 05/10	51	69	BSC	+2 w.i.	[+]	**PF0560**	122,9×53,4×18	OK012/ OK040	BSC	+w.i.	[+]	**PF0446**	102×47,1×17,2	OK012
1.2	10/09 → 05/10	48	65	BSC	+2 w.i.	[+]	**PF0560**	122,9×53,4×18	OK012/ OK040	BSC	+w.i.	[+]	**PF0446**	102×47,1×17,2	OK012
1.2	05/10 → 03/12			ATE	Vented Disc/ 257×22	[+]	**PF0427**	149,3×52,5×17,4		BSC	+w.i.	[+]	**PF0446**	102×47,1×17,2	OK012
1.3 D Multijet	07/08 → 05/10	51	69	BSC	+2 w.i.	[+]	**PF0560**	122,9×53,4×18	OK012/ OK040	BSC	+w.i.	[+]	**PF0446**	102×47,1×17,2	OK012
1.3 D Multijet	10/09 → 05/10	55	75	BSC	+2 w.i.	[+]	**PF0560**	122,9×53,4×18	OK012/ OK040	BSC	+w.i.	[+]	**PF0446**	102×47,1×17,2	OK012
1.3 Mjt	05/10 → 03/12		75	ATE	Vented Disc/ 257×22	[+]	**PF0427**	149,3×52,5×17,4		BSC	+w.i.	[+]	**PF0446**	102×47,1×17,2	OK012
1.3 D Multijet	10/09 → 05/10	70	95	BSC	+2 w.i.	[+]	**PF0560**	122,9×53,4×18	OK012/ OK040	BSC	+w.i.	[+]	**PF0446**	102×47,1×17,2	OK012
1.3 D Multijet	10/09 → 05/10	66	90	BSC	+2 w.i.	[+]	**PF0560**	122,9×53,4×18	OK012/ OK040	BSC	+w.i.	[+]	**PF0446**	102×47,1×17,2	OK012
1.4	07/09 → 03/12	55	75	BSC	+2 w.i.	[+]	**PF0560**	122,9×53,4×18	OK012/ OK040	BSC	+w.i.	[+]	**PF0446**	102×47,1×17,2	OK012
1.4	10/09 → 03/12	57	77	BSC	+2 w.i.	[+]	**PF0560**	122,9×53,4×18	OK012/ OK040	BSC	+w.i.	[+]	**PF0446**	102×47,1×17,2	OK012
1.4 LPG	10/09 → 03/12	57	78	BSC	+2 w.i.	[+]	**PF0560**	122,9×53,4×18	OK012/ OK040	BSC	+w.i.	[+]	**PF0446**	102×47,1×17,2	OK012
1.4 Natural Power	06/09 → 03/12	57	78	BSC	+2 w.i.	[+]	**PF0560**	122,9×53,4×18	OK012/ OK040	BSC	+w.i.	[+]	**PF0446**	102×47,1×17,2	OK012
1.4 T.	10/09 → 05/10	77	105	BSC	+2 w.i.	[+]	**PF0221**	137×57,3×19	OK033/ OK040	BSC	+w.i.	[+]	**PF0446**	102×47,1×17,2	OK012
1.4 T.	10/09 → 05/10	99	135	BSC	+2 w.i.	[+]	**PF0221**	137×57,3×19	OK033/ OK040	BSC	+w.i.	[+]	**PF0446**	102×47,1×17,2	OK012
1.4 T.	05/10 → 03/12	99	135	ATE	Vented Disc/ 257×22	[+]	**PF0427**	149,3×52,5×17,4		BSC	+w.i.	[+]	**PF0446**	102×47,1×17,2	OK012
1.6 D Multijet	10/09 → 03/12	88	120	BSC	+2 w.i.	[+]	**PF0221**	137×57,3×19	OK033/ OK040	BSC	+w.i.	[+]	**PF0446**	102×47,1×17,2	OK012
Grande Punto Evo Abarth (199)															
1.4 Abarth	10/09 →	120	163	BR		[+]	**PF0127**	124,7×70,7×15,1		BSC		[-]	**PF0230**	102×47,1×17,2	OK033/ OK040
1.4 Abarth	10/09 →	120	163	BR		[+]	**PF0127**	124,7×70,7×15,1		BSC	+w.i.	[+]	**PF0446**	102×47,1×17,2	OK012
1.4 Abarth	04/10 →	120	163	BR	+2 w.i.	[+]	**PF0591**	124,7×70,7×15,1		BSC	+w.i.	[+]	**PF0446**	102×47,1×17,2	OK012
2.0 Abarth	10/09 →	199	271	BR		[+]	**PF0127**	124,7×70,7×15,1		BSC		[-]	**PF0230**	102×47,1×17,2	OK033/ OK040

		KW	CV													
				SiS	i	W.i.	MAGNETI MARELLI	W×H×Th (mm)	Extra kit [Opt]	SiS	i	W.i.	MAGNETI MARELLI	W×H×Th (mm)	Extra kit [Opt]
FIAT															
Grande Punto Evo Abarth (199)															
2.0 Abarth	10/09 →	199	271	BR		[+]	**PF0127**	124,7×70,7×15,1		BSC	+w.i.	[+]	**PF0446**	102×47,1×17,2	OK012
2.0 Abarth	04/10 →	199	271	BR	+2 w.i.	[+]	**PF0591**	124,7×70,7×15,1		BSC	+w.i.	[+]	**PF0446**	102×47,1×17,2	OK012
Grande Punto Evo Van (199)															
1.4	03/09 → 03/12	57	78	BSC	+2 w.i.	[+]	**PF0560**	122,9×53,4×18	OK012/ OK040	BSC	+w.i.	[+]	**PF0446**	102×47,1×17,2	OK012
1.3 D Multijet	03/09 → 03/12	55	75	BSC	+2 w.i.	[+]	**PF0560**	122,9×53,4×18	OK012/ OK040	BSC	+w.i.	[+]	**PF0446**	102×47,1×17,2	OK012
1.3 D Multijet	03/09 → 03/12	70	95	BSC	+2 w.i.	[+]	**PF0560**	122,9×53,4×18	OK012/ OK040	BSC	+w.i.	[+]	**PF0446**	102×47,1×17,2	OK012
Idea (135)															
1.2 16V	01/04 →	59	80	BSC		[+]	**PF0126**	122,9×53,4×18	OK012/ OK040						
1.3 D Multijet	05/08 →	70	95	BSC		[+]	**PF0126**	122,9×53,4×18	OK012/ OK040						
1.3 D Multijet	10/05 →	66	90	BSC		[+]	**PF0126**	122,9×53,4×18	OK012/ OK040						
1.3 JTD	01/04 →	51	70	BSC		[+]	**PF0126**	122,9×53,4×18	OK012/ OK040						
1.4	01/06 →	60	82	BSC		[+]	**PF0126**	122,9×53,4×18	OK012/ OK040						
1.4	08/10 →	59	78	BSC		[+]	**PF0126**	122,9×53,4×18	OK012/ OK040						
1.4	10/05 →	57	77	BSC		[+]	**PF0126**	122,9×53,4×18	OK012/ OK040						
1.4	12/03 →	66	90	BSC		[+]	**PF0126**	122,9×53,4×18	OK012/ OK040						
1.4 16V	01/04 →	70	95	BSC		[+]	**PF0126**	122,9×53,4×18	OK012/ OK040						
1.4 LPG	03/09 →	57	78	BSC		[+]	**PF0126**	122,9×53,4×18	OK012/ OK040						
1.6	08/10 →	85	116	BSC		[+]	**PF0126**	122,9×53,4×18	OK012/ OK040						
1.6 D Multijet	05/08 →	88	120	BSC		[+]	**PF0126**	122,9×53,4×18	OK012/ OK040						
1.8	01/06 →	84	114	BSC		[+]	**PF0126**	122,9×53,4×18	OK012/ OK040						
1.8 Flex	08/10 →	96	131	BSC		[+]	**PF0126**	122,9×53,4×18	OK012/ OK040						
1.9 JTD	01/04 →	74	101	BSC		[-]	**PF0228**	137×57,3×19	OK033/ OK038						
Linea (323)															
1.3 D Multijet	11/08 →	68	93	BSC		[+]	**PF0126**	122,9×53,4×18	OK012/ OK040	LG		[-]	**PF0109**	95,8×43,9×16,5	OK039/ OK069

		KW	CV													
				SiS	i	W.i.	MAGNETI MARELLI	W×H×Th (mm)	Extra kit [Opt]	SiS	i	W.i.	MAGNETI MARELLI	W×H×Th (mm)	Extra kit [Opt]
FIAT															
Linea (323)															
1.3 D Multijet	06/07 →	66	90	BSC		[+]	**PF0126**	122,9×53,4×18	OK012/ OK040	LG		[-]	**PF0109**	95,8×43,9×16,5	OK039/ OK069
1.3 D Multijet	09/09 →	70	95	BSC		[+]	**PF0126**	122,9×53,4×18	OK012/ OK040	LG		[-]	**PF0109**	95,8×43,9×16,5	OK039/ OK069
1.4	12/08 →	66	90	BSC		[+]	**PF0126**	122,9×53,4×18	OK012/ OK040	LG		[-]	**PF0109**	95,8×43,9×16,5	OK039/ OK069
1.4	06/07 →	57	77	BSC		[+]	**PF0126**	122,9×53,4×18	OK012/ OK040	LG		[-]	**PF0109**	95,8×43,9×16,5	OK039/ OK069
1.4 T-Jet	09/07 →	84	114	BSC		[+]	**PF0126**	122,9×53,4×18	OK012/ OK040	LG		[-]	**PF0109**	95,8×43,9×16,5	OK039/ OK069
1.4 T-Jet	09/07 →	88	120	BSC		[+]	**PF0126**	122,9×53,4×18	OK012/ OK040	LG		[-]	**PF0109**	95,8×43,9×16,5	OK039/ OK069
1.6 D Multijet	06/09 →	77	105	BSC		[+]	**PF0126**	122,9×53,4×18	OK012/ OK040						
1.8 Flex	09/10 →	93	126	BSC		[+]	**PF0126**	122,9×53,4×18	OK012/ OK040	LG		[-]	**PF0109**	95,8×43,9×16,5	OK039/ OK069
1.8 Flex	09/10 →	96	131	BSC		[+]	**PF0126**	122,9×53,4×18	OK012/ OK040	LG		[-]	**PF0109**	95,8×43,9×16,5	OK039/ OK069
1.9 16V	06/09 →	93	126	BSC		[+]	**PF0126**	122,9×53,4×18	OK012/ OK040	LG		[-]	**PF0109**	95,8×43,9×16,5	OK039/ OK069
1.9 16V	09/10 →	97	132	BSC		[+]	**PF0126**	122,9×53,4×18	OK012/ OK040	LG		[-]	**PF0109**	95,8×43,9×16,5	OK039/ OK069
1.4 T-Jet	10/08 →	112	152	BSC		[+]	**PF0214**	137×57,3×19	OK033/ OK038	LG		[-]	**PF0109**	95,8×43,9×16,5	OK039/ OK069
Marea Berlina (185)															
1.2 16V	10/98 →	60	82	ATE		[+]	**PF0222**	151,4×52×18							
1.4 80 12V	09/96 →	59	80	ATE		[+]	**PF0222**	151,4×52×18							
1.6 SX	09/00 → 08/02	72	98	ATE		[+]	**PF0782**	151,4×52×18							
1.6	06/05 →	78	106	ATE		[+]	**PF0782**	151,4×52×18							
1.6	03/99 → 08/00	68	92	ATE		[+]	**PF0782**	151,4×52×18							
1.6	09/00 → 08/02	76	103	ATE		[+]	**PF0782**	151,4×52×18							
1.6 100 16V	09/96 →	76	103	ATE		[+]	**PF0222**	151,4×52×18							
1.6 100 16V Bipower	04/99 →	76	103	ATE		[+]	**PF0222**	151,4×52×18							
1.6 16V	04/97 → 02/99	75	102	ATE		[+]	**PF0222**	151,4×52×18							
1.8 115 16V	09/96 →	83	113	ATE		[+]	**PF0104**	156,4×52,5×17,8							
1.9 JTD 105	04/99 → 01/01	77	105	ATE		[+]	**PF0102**	156,4×52,5×17,8							
1.9 JTD 110	01/01 →	81	110	ATE		[+]	**PF0102**	156,4×52,5×17,8							
1.9 TD 100	09/96 →	74	100	ATE		[+]	**PF0104**	156,4×52,5×17,8							
1.9 TD 75	09/96 →	55	75	ATE		[+]	**PF0222**	151,4×52×18							
2.0 150 20V	09/96 → 04/99	108	147	ATE		[+]	**PF0101**	155,1×59,1×19,3		LG		[-]	**PF0106**	86,8×44,6×14,2	OK032
2.0 150 20V	01/01 →	110	150	ATE		[+]	**PF0103**	155,1×59,1×19,3		LG		[-]	**PF0106**	86,8×44,6×14,2	OK032
2.0 155 20V	04/99 → 01/01	113	154	ATE		[+]	**PF0103**	155,1×59,1×19,3		LG		[-]	**PF0106**	86,8×44,6×14,2	OK032
2.4 TD 125	09/96 → 04/99	91	125	ATE		[+]	**PF0101**	155,1×59,1×19,3		LG		[-]	**PF0106**	86,8×44,6×14,2	OK032

		KW	CV	SiS	i	W.i.	MAGNETI MARELLI	W×H×Th (mm)	Extra kit [Opt]	SiS	i	W.i.	MAGNETI MARELLI	W×H×Th (mm)	Extra kit [Opt]
FIAT															
Marea Berlina (185)															
2.4 JTD 130	04/99 →	96	130	ATE		[+]	**PF0103**	155,1×59,1×19,3		LG		[-]	**PF0106**	86,8×44,6×14,2	OK032
Marea SW (185)															
1.2 16V	10/98 →	60	82	ATE		[+]	**PF0222**	151,4×52×18							
1.4 80 12V	09/96 →	59	80	ATE		[+]	**PF0222**	151,4×52×18							
1.6	06/05 →	78	106	ATE		[+]	**PF0782**	151,4×52×18							
1.6	09/00 → 08/02	76	103	ATE		[+]	**PF0782**	151,4×52×18							
1.6 100 16V	09/96 →	76	103	ATE		[+]	**PF0222**	151,4×52×18							
1.8	08/05 →	97	132	ATE		[+]	**PF0104**	156,4×52,5×17,8							
1.8 115 16V	09/96 →	83	113	ATE		[+]	**PF0104**	156,4×52,5×17,8							
1.9 JTD 105	04/99 →	77	105	ATE		[+]	**PF0104**	156,4×52,5×17,8							
1.9 JTD 110	01/01 →	81	110	ATE		[+]	**PF0102**	156,4×52,5×17,8							
1.9 TD 100	09/96 →	74	100	ATE		[+]	**PF0102**	156,4×52,5×17,8							
1.9 TD 75	09/96 →	55	75	ATE		[+]	**PF0104**	156,4×52,5×17,8							
2.0	08/05 →	134	182	ATE		[+]	**PF0101**	155,1×59,1×19,3		LG		[-]	**PF0106**	86,8×44,6×14,2	OK032
2.0 150 20V	09/96 → 04/99	108	147	ATE		[+]	**PF0101**	155,1×59,1×19,3		LG		[-]	**PF0106**	86,8×44,6×14,2	OK032
2.0 150 20V	01/01 →	110	150	ATE		[+]	**PF0103**	155,1×59,1×19,3		LG		[-]	**PF0106**	86,8×44,6×14,2	OK032
2.0 155 20V	04/99 → 01/01	113	154	ATE		[+]	**PF0103**	155,1×59,1×19,3		LG		[-]	**PF0106**	86,8×44,6×14,2	OK032
2.4 JTD 130	04/99 →	96	130	ATE		[+]	**PF0101**	155,1×59,1×19,3		LG		[-]	**PF0106**	86,8×44,6×14,2	OK032
2.4 TD 125	09/96 → 04/99	91	125	ATE		[+]	**PF0103**	155,1×59,1×19,3		LG		[-]	**PF0106**	86,8×44,6×14,2	OK032
Multipla I (186)															
1.6 16V Bipower	04/99 → 09/04	76	103	ATE	(186AMB1A)	[+]	**PF0103**	155,1×59,1×19,3		BSC		[-]	**PF0125**	94,9×42,8×16,4	OK033/ OK040
1.6 16V Bipower	10/01 → 09/04	76	103	BSC	(186AXC1A)	[+]	**PF0214**	137×57,3×19	OK033/ OK038	BSC		[-]	**PF0125**	94,9×42,8×16,4	OK033/ OK040
1.6 16V Blupower	04/99 → 09/04	70	95	ATE	(186AMA1A)	[+]	**PF0103**	155,1×59,1×19,3		BSC		[-]	**PF0125**	94,9×42,8×16,4	OK033/ OK040
1.6 16V Blupower	04/99 → 09/04	70	95	BSC	(186AMA1A)	[+]	**PF0214**	137×57,3×19	OK033/ OK038	BSC		[-]	**PF0125**	94,9×42,8×16,4	OK033/ OK040
1.6 16V	04/02 → 09/04	70	95	ATE	(186AGB1A)	[+]	**PF0103**	155,1×59,1×19,3		BSC		[-]	**PF0125**	94,9×42,8×16,4	OK033/ OK040
1.6 100 16V	04/99 → 09/04	76	103	ATE	(186AXA1A)	[+]	**PF0103**	155,1×59,1×19,3		BSC		[-]	**PF0125**	94,9×42,8×16,4	OK033/ OK040
1.6 100 16V	04/99 → 09/04	76	103	BSC	(186AXA1A)	[+]	**PF0214**	137×57,3×19	OK033/ OK038	BSC		[-]	**PF0125**	94,9×42,8×16,4	OK033/ OK040
1.9 JTD	04/99 → 09/04	77	105	ATE	(186AXB1A)	[+]	**PF0103**	155,1×59,1×19,3		BSC		[-]	**PF0125**	94,9×42,8×16,4	OK033/ OK040
1.9 JTD	04/99 → 09/04	77	105	BSC	(186AXB1A)	[+]	**PF0214**	137×57,3×19	OK033/ OK038	BSC		[-]	**PF0125**	94,9×42,8×16,4	OK033/ OK040
1.9 JTD	03/01 → 07/02	81	110	ATE		[+]	**PF0103**	155,1×59,1×19,3		BSC		[-]	**PF0125**	94,9×42,8×16,4	OK033/ OK040
1.9 JTD	07/02 → 09/04	85	115	ATE		[+]	**PF0103**	155,1×59,1×19,3		BSC		[-]	**PF0125**	94,9×42,8×16,4	OK033/ OK040
1.9 JTD	07/02 → 09/04	85	115	BSC		[+]	**PF0214**	137×57,3×19	OK033/ OK038	BSC		[-]	**PF0125**	94,9×42,8×16,4	OK033/ OK040

		KW	CV	SiS	i	W.i.	MAGNETI MARELLI	W×H×Th (mm)	Extra kit [Opt]	SiS	i	W.i.	MAGNETI MARELLI	W×H×Th (mm)	Extra kit [Opt]
FIAT															
Multipla II (186)															
1.6	05/04 → 08/05	68	92	ATE		[+]	**PF0103**	155,1×59,1×19,3		BSC		[-]	**PF0125**	94,9×42,8×16,4	OK033/ OK040
1.6 16V Bipower	07/04 →			ATE		[+]	**PF0103**	155,1×59,1×19,3		BSC		[-]	**PF0125**	94,9×42,8×16,4	OK033/ OK040
1.6 16V Bipower	10/04 →			BSC		[+]	**PF0214**	137×57,3×19	OK033/ OK038	BSC		[-]	**PF0125**	94,9×42,8×16,4	OK033/ OK040
1.9 JTD	07/04 →			ATE		[+]	**PF0103**	155,1×59,1×19,3		BSC		[-]	**PF0125**	94,9×42,8×16,4	OK033/ OK040
1.9 JTD	10/04 →			BSC		[+]	**PF0214**	137×57,3×19	OK033/ OK038	BSC		[-]	**PF0125**	94,9×42,8×16,4	OK033/ OK040
1.9 Mjt	07/04 →			ATE		[+]	**PF0103**	155,1×59,1×19,3		BSC		[-]	**PF0125**	94,9×42,8×16,4	OK033/ OK040
1.9 Mjt	10/04 →			BSC		[+]	**PF0214**	137×57,3×19	OK033/ OK038	BSC		[-]	**PF0125**	94,9×42,8×16,4	OK033/ OK040
Palio (178)															
All types	96 → 98			ATE		[-]	**PF0807**	151,5×49×17,8							
1.0	00 → 11/03			ATE		[+]	**PF0234**	151,5×49×17,8							
1.0 16V	00 → 11/03			ATE		[+]	**PF0234**	151,5×49×17,8							
1.2	97 → 01			ATE		[+]	**PF0234**	151,5×49×17,8							
1.6 16V	97 → 01			ATE		[+]	**PF0234**	151,5×49×17,8							
1.6i 16V	98 → 00			ATE		[+]	**PF0232**	151,4×52,5×18							
1.7 TD	97 → 01			ATE		[+]	**PF0234**	151,5×49×17,8							
1.7 DS	→ 03/98			ATE		[-]	**PF0235**	151,5×49×17,8							
1.7 D	97 → 01			ATE		[+]	**PF0234**	151,5×49×17,8							
Palio SW (178)															
1.2	97 → 08			ATE		[+]	**PF0234**	151,5×49×17,8							
1.6 16V	97 → 08			ATE		[+]	**PF0234**	151,5×49×17,8							
1.7 TD	97 → 08			ATE		[+]	**PF0234**	151,5×49×17,8							
1.9 D	01 → 08			ATE		[-]	**PF0233**	151,4×52,5×18							
1.9 jTD	02 → 08			ATE		[-]	**PF0233**	151,4×52,5×18							
Palio Turchia															
1.2	01/03 →			BSC		[-]	**PF0693**	123,3×49,3×17,8	OK033/ OK040						
Panda I (141A_)															
900	03/80 → 07/04	33	45	BD		[+]	**PF0212**	108,8×47,4×18	OK028						
900	03/80 → 07/04	29	40	BD		[+]	**PF0212**	108,8×47,4×18	OK028						
950	03/80 → 07/04	35	48	BD		[+]	**PF0212**	108,8×47,4×18	OK028						
1000	03/80 → 07/04	32	44	BD		[+]	**PF0212**	108,8×47,4×18	OK028						
1000	03/80 → 07/04	37	50	BD		[+]	**PF0212**	108,8×47,4×18	OK028						
1000 i.e. CAT	03/80 → 07/04	33	45	BD		[+]	**PF0212**	108,8×47,4×18	OK028						
1100	03/80 → 07/04	37	50	BD		[+]	**PF0212**	108,8×47,4×18	OK028						
1100	03/80 → 07/04	40	54	BD		[+]	**PF0212**	108,8×47,4×18	OK028						
1300 D	03/80 → 07/04	27	37	BD		[+]	**PF0212**	108,8×47,4×18	OK028						
All types	03/80 → 07/04			BD	- w.i.	[o]	**PF0237**	108,8×47,4×18	OK028						

		KW	CV	SiS	i	W.i.	MAGNETI MARELLI	W×H×Th (mm)	Extra kit [Opt]	SiS	i	W.i.	MAGNETI MARELLI	W×H×Th (mm)	Extra kit [Opt]
FIAT															
Panda I Van (141)															
750	01/86 → 07/92	25	34	BD		[+]	**PF0212**	108,8×47,4×18	OK028						
1.1	09/00 → 02/04	40	54	BD		[+]	**PF0212**	108,8×47,4×18	OK028						
1.1	05/91 → 03/95	37	50	BD		[+]	**PF0212**	108,8×47,4×18	OK028						
1.1 AWD	09/00 → 02/04	40	54	BD		[+]	**PF0212**	108,8×47,4×18	OK028						
1000	01/86 → 02/92	32	44	BD		[+]	**PF0212**	108,8×47,4×18	OK028						
1000 i.e	08/92 → 02/04	33	45	BD		[+]	**PF0212**	108,8×47,4×18	OK028						
All types	08/92 → 02/04			BD	- w.i.	[o]	**PF0237**	108,8×47,4×18	OK028						
Panda I 4x4 (141)															
950 4x4	03/80 → 07/04	35	48	BD		[+]	**PF0212**	108,8×47,4×18	OK028						
1000 4x4	03/80 → 07/04	32	44	BD		[+]	**PF0212**	108,8×47,4×18	OK028						
1000 4x4	03/80 → 07/04	37	50	BD		[+]	**PF0212**	108,8×47,4×18	OK028						
1100 4x4	03/80 → 07/04	40	54	BD		[+]	**PF0212**	108,8×47,4×18	OK028						
1100 Trekking 4x4	03/80 → 07/04	37	50	BD		[+]	**PF0212**	108,8×47,4×18	OK028						
All types	03/80 → 07/04			BD	- w.i.	[o]	**PF0237**	108,8×47,4×18	OK028						
Panda II (169)															
1.1	09/03 →	40	54	BD	+shim	[o]	**PF0219**	115×55,6×17	OK029/ OK094						
1.1	09/03 →	40	54	BD	-shim	[o]	**PF0220**	115×55,6×17	OK029/ OK094						
1.1	10/09 →	40	54	BD	+KIT	[-]	**PF0456**	115×55,6×17	OK029/ OK094						
1.2 8V	09/03 →	51	69	BD	+shim	[o]	**PF0219**	115×55,6×17	OK029/ OK094						
1.2 8V	09/03 →	51	69	BD	-shim	[o]	**PF0220**	115×55,6×17	OK029/ OK094						
1.2 8V	10/09 →	51	69	BD	+KIT	[-]	**PF0456**	115×55,6×17	OK029/ OK094						
1.2 8V	09/03 →	44	60	BD	+shim	[o]	**PF0219**	115×55,6×17	OK029/ OK094						
1.2 8V	09/03 →	44	60	BD	-shim	[o]	**PF0220**	115×55,6×17	OK029/ OK094						
1.2 8V	10/09 →	44	60	BD	+KIT	[-]	**PF0456**	115×55,6×17	OK029/ OK094						
1.2 Bi-Power / Natural Power	09/07 →	44	60	BD		[-]	**PF0236**	122,9×51,7×17,5	OK012						
1.2 LPG	09/03 →	51	69	BD	+shim	[o]	**PF0219**	115×55,6×17	OK029/ OK094						
1.2 LPG	09/03 →	51	69	BD	-shim	[o]	**PF0220**	115×55,6×17	OK029/ OK094						
1.2 LPG	10/09 →	51	69	BD	+KIT	[-]	**PF0456**	115×55,6×17	OK029/ OK094						
1.2 LPG	09/03 →	44	60	BD	+shim	[o]	**PF0219**	115×55,6×17	OK029/ OK094						

		KW	CV													
				SiS	i	W.i.	MAGNETI MARELLI	W×H×Th (mm)	Extra kit [Opt]	SiS	i	W.i.	MAGNETI MARELLI	W×H×Th (mm)	Extra kit [Opt]
FIAT															
Panda II (169)															
1.2 LPG	09/03→	44	60	BD	-shim	[o]	**PF0220**	115×55,6×17	OK029/ OK094						
1.2 LPG	10/09→	44	60	BD	+KIT	[-]	**PF0456**	115×55,6×17	OK029/ OK094						
1.3 D Multijet	09/03→	51	70	BSC		[-]	**PF0236**	122,9×51,7×17,5	OK012/ OK040						
1.3 D Multijet	09/03→	55	75	BSC		[-]	**PF0236**	122,9×51,7×17,5	OK012/ OK040						
1.4 8V Natural Power	01/10→	51	69	BSC		[-]	**PF0236**	122,9×51,7×17,5	OK012/ OK040						
1.4 Bi-Power / Natural Power	09/03→	57	78	BSC		[-]	**PF0236**	122,9×51,7×17,5	OK012/ OK040						
1.4 100HP	09/03→	74	100	BSC		[+]	**PF0126**	122,9×53,4×18	OK012/ OK040	LG		[-]	**PF0216**	95,8×43,9×13,7	OK039
Panda Van II (169)															
1.2	09/04→	44	60	BD	+shim	[o]	**PF0219**	115×55,6×17	OK029/ OK094						
1.2	09/04→	44	60	BD	-shim	[o]	**PF0220**	115×55,6×17	OK029/ OK094						
1.2 4x4	09/04→	44	60	BSC		[-]	**PF0236**	122,9×51,7×17,5	OK012/ OK040						
1.3 JTD	01/06→	55	75	BD		[-]	**PF0236**	122,9×51,7×17,5	OK012/ OK040						
1.3 JTD	03/04→	51	69	BSC		[-]	**PF0236**	122,9×51,7×17,5	OK012/ OK040						
1.4 Natural Power	10/09→	57	78	BSC		[-]	**PF0236**	122,9×51,7×17,5	OK012/ OK040						
Panda II Promiscuo (169)															
1.2	09/10→	51	69	BD	Box/+shim	[o]	**PF0219**	115×55,6×17	OK029/ OK094						
1.2	09/10→	51	69	BD	Box/-shim	[o]	**PF0220**	115×55,6×17	OK029/ OK094						
1.3 Multijet	01/06→	55	75	BSC	Box	[-]	**PF0236**	122,9×51,7×17,5	OK012/ OK040						
Panda II 4x4 (169)															
1.2	09/03→	51	69	BSC		[-]	**PF0236**	122,9×51,7×17,5	OK012/ OK040	LG		[-]	**PF0216**	95,8×43,9×13,7	OK039
1.2	09/03→	44	60	BSC		[-]	**PF0236**	122,9×51,7×17,5	OK012/ OK040	LG		[-]	**PF0216**	95,8×43,9×13,7	OK039
1.3 D Multijet	09/03→	55	75	BSC		[-]	**PF0236**	122,9×51,7×17,5	OK012/ OK040	LG		[-]	**PF0216**	95,8×43,9×13,7	OK039
1.3 D Multijet	09/03→	51	70	BSC		[-]	**PF0236**	122,9×51,7×17,5	OK012/ OK040	LG		[-]	**PF0216**	95,8×43,9×13,7	OK039
1.3 jTD 16V	01/08→			BSC		[-]	**PF0558**	122,9×53,4×18	OK012	LG		[-]	**PF0216**	95,8×43,9×13,7	OK039

		KW	CV	SiS	i	W.i.	MAGNETI MARELLI	W×H×Th (mm)	Extra kit [Opt]	SiS	i	W.i.	MAGNETI MARELLI	W×H×Th (mm)	Extra kit [Opt]
FIAT															
Panda II 4x4 (169)															
1.3 jTD 16V Cross	09/03 →	55	75	BSC		[-]	**PF0558**	122,9×53,4×18	OK012	LG		[-]	**PF0216**	95,8×43,9×13,7	OK039
Panda III (312)															
0.9	12/13 →	44	60	ATE	+2 w.i.	[+]	**PF0428**	149,3×52,5×17,4							
0.9	12/13 →	59	80	ATE	+2 w.i.	[+]	**PF0428**	149,3×52,5×17,4							
0.9	02/12 →	63	86	ATE	+2 w.i.	[+]	**PF0428**	149,3×52,5×17,4							
1.2	02/12 →	51	69	ATE	+2 w.i.	[+]	**PF0428**	149,3×52,5×17,4							
1.3 D Multijet	02/12 →	55	75	ATE	+2 w.i.	[+]	**PF0428**	149,3×52,5×17,4							
Natural Power	02/12 →			ATE	+2 w.i.	[+]	**PF0428**	149,3×52,5×17,4							
Gpl	02/12 →			ATE	+2 w.i.	[+]	**PF0428**	149,3×52,5×17,4							
Panda III 4x4 (312)															
0.9	09/12 →	63	86	ATE	+2 w.i.	[+]	**PF0428**	149,3×52,5×17,4		LG		[+]	**PF0689**	95,8×43,9×14,3	OK039
1.3 D Multijet	06/12 →	55	75	ATE	+2 w.i.	[+]	**PF0428**	149,3×52,5×17,4		LG		[+]	**PF0689**	95,8×43,9×14,3	OK039
Penny (257)															
1.1	01/86 → 12/90	43	58	ATE		[-]	**PF0807**	151,5×49×17,8							
1.3	01/86 → 12/90	49	67	ATE		[-]	**PF0807**	151,5×49×17,8							
1.7 D	01/86 → 12/90	44	60	ATE		[-]	**PF0807**	151,5×49×17,8							
Punto (176)															
55 1.1	09/93 → 09/99	40	54	LG		[+]	**PF0105**	104×66,4×17	OK030	LG		[-]	**PF0783**	87,2×44,5×14,3	OK032
55 6 Speed	93 → 97			BD	+shim	[+]	**PF0218**	115×55,6×17	OK029/ OK094						
55 6 Speed	93 → 97			BD	-shim	[+]	**PF0217**	115×55,6×17	OK029/ OK094						
60 1.2	01/94 → 09/99	43	58	BD	+shim	[+]	**PF0218**	115×55,6×17	OK029/ OK094						
60 1.2	01/94 → 09/99	43	58	BD	-shim	[+]	**PF0217**	115×55,6×17	OK029/ OK094						
60 1.2	03/94 → 09/99	44	60	BD	+shim	[+]	**PF0218**	115×55,6×17	OK029/ OK094						
60 1.2	03/94 → 09/99	44	60	BD	-shim	[+]	**PF0217**	115×55,6×17	OK029/ OK094						
60 TD 1.7	09/96 → 09/99	46	63	LG		[+]	**PF0105**	104×66,4×17	OK030	LG		[-]	**PF0783**	87,2×44,5×14,3	OK032
75 1.2	10/93 → 09/99	54	73	BD	+shim	[+]	**PF0218**	115×55,6×17	OK029/ OK094						
75 1.2	10/93 → 09/99	54	73	BD	-shim	[+]	**PF0217**	115×55,6×17	OK029/ OK094						
85 16V 1.2	04/97 → 09/99	63	86	BD	+shim	[+]	**PF0218**	115×55,6×17	OK029/ OK094						
85 16V 1.2	04/97 → 09/99	63	86	BD	-shim	[+]	**PF0217**	115×55,6×17	OK029/ OK094						
90 1.6	01/94 → 04/97	65	88	LG		[+]	**PF0105**	104×66,4×17	OK030	LG		[-]	**PF0783**	87,2×44,5×14,3	OK032
1.7 D	04/94 → 09/97	42	57	LG		[+]	**PF0105**	104×66,4×17	OK030	LG		[-]	**PF0783**	87,2×44,5×14,3	OK032
1.7 TD	01/94 → 09/99	52	71	ATE		[-]	**PF0239**	151,4×52×18		LG		[-]	**PF0783**	87,2×44,5×14,3	OK032
1.7 TD	01/94 → 09/99	51	69	ATE		[-]	**PF0239**	151,4×52×18		LG		[-]	**PF0783**	87,2×44,5×14,3	OK032

		KW	CV	SiS	i	W.i.	MAGNETI MARELLI	W×H×Th (mm)	Extra kit [Opt]	SiS	i	W.i.	MAGNETI MARELLI	W×H×Th (mm)	Extra kit [Opt]
FIAT															
Punto (176)															
1.4 GT Turbo	01/94 → 09/96	98	133	LG		[+]	**PF0105**	104×66,4×17	OK030	LG		[-]	**PF0783**	87,2×44,5×14,3	OK032
1.4 GT Turbo	09/96 → 09/99	96	131	LG		[+]	**PF0105**	104×66,4×17	OK030	LG		[-]	**PF0106**	86,8×44,6×14,2	OK032
Punto Cabriolet (176C)															
60 1.2	04/94 → 06/00	43	58	ATE		[-]	**PF0239**	151,4×52×18							
60 1.2	05/95 → 06/00	44	60	ATE		[-]	**PF0239**	151,4×52×18							
85 16V 1.2	04/97 → 06/00	63	86	ATE		[-]	**PF0239**	151,4×52×18							
90 1.6	04/94 → 04/97	65	88	ATE		[+]	**PF0222**	151,4×52×18							
Punto Van (176L)															
1.1	04/96 → 02/00	40	54	BD	+shim	[+]	**PF0218**	115×55,6×17	OK029/ OK094						
1.1	04/96 → 02/00	40	54	BD	-shim	[+]	**PF0217**	115×55,6×17	OK029/ OK094						
1.7 D	04/96 → 02/00	42	57	BD	+shim	[+]	**PF0218**	115×55,6×17	OK029/ OK094						
1.7 D	04/96 → 02/00	42	57	BD	-shim	[+]	**PF0217**	115×55,6×17	OK029/ OK094						
1.7 TD	04/96 → 02/00	52	71	BD	+shim	[+]	**PF0218**	115×55,6×17	OK029/ OK094						
1.7 TD	04/96 → 02/00	52	71	BD	-shim	[+]	**PF0217**	115×55,6×17	OK029/ OK094						
Punto II (188)															
1.2 16V	09/99 →	59	80	ATE	(188.233, 235, 253, 255, 333, 353, 639, 63)	[-]	**PF0239**	151,4×52×18		LG		[-]	**PF0106**	86,8×44,6×14,2	OK032
1.2 8V	07/03 → 11		60	BD	(188.030, 050, 130, 150, 230, 250)/+shim	[+]	**PF0218**	115×55,6×17	OK029/ OK094	LG		[-]	**PF0106**	86,8×44,6×14,2	OK032
1.2 8V	07/03 → 11		60	BD	(188.030, 050, 130, 150, 230, 250)/-shim	[+]	**PF0217**	115×55,6×17	OK029/ OK094	LG		[-]	**PF0106**	86,8×44,6×14,2	OK032
1.2 BiPower	07/03 → 11			BD	+shim	[o]	**PF0219**	115×55,6×17	OK029/ OK094	LG		[-]	**PF0106**	86,8×44,6×14,2	OK032
1.2 BiPower	07/03 → 11			BD	-shim	[o]	**PF0220**	115×55,6×17	OK029/ OK094	LG		[-]	**PF0106**	86,8×44,6×14,2	OK032
1.2 Natural Power	09/03 →	44	60	BD	+shim	[o]	**PF0219**	115×55,6×17	OK029/ OK094	LG		[-]	**PF0106**	86,8×44,6×14,2	OK032
1.2 Natural Power	09/03 →	44	60	BD	-shim	[o]	**PF0220**	115×55,6×17	OK029/ OK094	LG		[-]	**PF0106**	86,8×44,6×14,2	OK032
1.3 JTD 16V	06/03 →	51	70	ATE		[-]	**PF0238**	156,4×52,5×17,8		LG		[-]	**PF0106**	86,8×44,6×14,2	OK032
1.3 16V MJ	07/03 → 11			ATE		[-]	**PF0238**	156,4×52,5×17,8		LG		[-]	**PF0106**	86,8×44,6×14,2	OK032
1.4 16V	07/03 → 11			ATE		[-]	**PF0238**	156,4×52,5×17,8		LG		[-]	**PF0106**	86,8×44,6×14,2	OK032

		KW	CV	SiS	i	W.i.	MAGNETI MARELLI	W×H×Th (mm)	Extra kit [Opt]	SiS	i	W.i.	MAGNETI MARELLI	W×H×Th (mm)	Extra kit [Opt]
FIAT															
Punto II (188)															
1.8 16V	07/03 → 11			ATE		[+]	**PF0103**	155,1×59,1×19,3		LG		[-]	**PF0216**	95,8×43,9×13,7	OK039
1.8 HGT	09/99 →	96	130	ATE	(188.738, .718)	[-]	**PF0233**	151,4×52,5×18		LG		[-]	**PF0216**	95,8×43,9×13,7	OK039
1.9 DS	09/99 →	44	60	ATE	(188.031, 051, 231, 251)	[-]	**PF0240**	151,4×52×18		LG		[-]	**PF0106**	86,8×44,6×14,2	OK032
1.9 MJ	07/03 → 11	63		ATE		[-]	**PF0238**	156,4×52,5×17,8							
1.9 JTD	10/01 →	63	86	ATE		[+]	**PF0238**	156,4×52,5×17,8		LG		[-]	**PF0106**	86,8×44,6×14,2	OK032
1.9 MJ	07/03 → 11	74		ATE		[+]	**PF0103**	155,1×59,1×19,3							
1.9 JTD	06/03 →	74	101	ATE		[+]	**PF0238**	156,4×52,5×17,8		LG		[-]	**PF0106**	86,8×44,6×14,2	OK032
1.9 JTD	09/99 →	59	80	ATE	(188.237, 257, 337, 357)	[+]	**PF0238**	156,4×52,5×17,8		LG		[-]	**PF0106**	86,8×44,6×14,2	OK032
1.9 HGT	07/03 → 11	74		ATE		[+]	**PF0103**	155,1×59,1×19,3		LG		[-]	**PF0216**	95,8×43,9×13,7	OK039
Punto II Van (188AX)															
1.2 60	02/00 →	44	60	ATE		[-]	**PF0238**	156,4×52,5×17,8							
1.3 JTD	06/03 → 10/05	51	69	ATE		[-]	**PF0238**	156,4×52,5×17,8							
1.9 D 60	02/00 →	44	60	ATE		[-]	**PF0238**	156,4×52,5×17,8							
1.9 JTD	02/00 →	63	86	ATE		[-]	**PF0238**	156,4×52,5×17,8							
Punto (199)															
0.9 Twinair Turbo	03/12 →	63	86	ATE		[+]	**PF0427**	149,3×52,5×17,4		BSC	+w.i.	[+]	**PF0446**	102×47,1×17,2	OK012
0.9 Bifuel	03/12 →	63	86	ATE		[+]	**PF0427**	149,3×52,5×17,4		BSC	+w.i.	[+]	**PF0446**	102×47,1×17,2	OK012
0.9	12/13 →	74	101	ATE		[+]	**PF0427**	149,3×52,5×17,4		BSC	+w.i.	[+]	**PF0446**	102×47,1×17,2	OK012
0.9	07/13 →	77	105	ATE		[+]	**PF0427**	149,3×52,5×17,4		BSC	+w.i.	[+]	**PF0446**	102×47,1×17,2	OK012
1.2	02/14 →	49	67	ATE		[+]	**PF0427**	149,3×52,5×17,4		BSC	+w.i.	[+]	**PF0446**	102×47,1×17,2	OK012
1.2	03/12 →	51	69	ATE		[+]	**PF0427**	149,3×52,5×17,4		BSC	+w.i.	[+]	**PF0446**	102×47,1×17,2	OK012
1.3 D Multijet	12/13 →	59	80	ATE		[+]	**PF0427**	149,3×52,5×17,4		BSC	+w.i.	[+]	**PF0446**	102×47,1×17,2	OK012
1.3 D	03/12 →	55	75	ATE		[+]	**PF0427**	149,3×52,5×17,4		BSC	+w.i.	[+]	**PF0446**	102×47,1×17,2	OK012
1.3 D	03/12	62	84	BSC		[+]	**PF0221**	137×57,3×19	OK033	BSC	+w.i.	[+]	**PF0446**	102×47,1×17,2	OK012
1.3 D	03/12	70	95	BSC		[+]	**PF0221**	137×57,3×19	OK033	BSC	+w.i.	[+]	**PF0446**	102×47,1×17,2	OK012
1.4	03/12 →	55	75	ATE		[+]	**PF0427**	149,3×52,5×17,4		BSC	+w.i.	[+]	**PF0446**	102×47,1×17,2	OK012
1.4	03/12 →	57	78	ATE		[+]	**PF0427**	149,3×52,5×17,4		BSC	+w.i.	[+]	**PF0446**	102×47,1×17,2	OK012
1.4 Bifuel	03/12 →	57	78	ATE		[+]	**PF0427**	149,3×52,5×17,4		BSC	+w.i.	[+]	**PF0446**	102×47,1×17,2	OK012
1.4 Natural Power	03/12 →	57	78	ATE		[+]	**PF0427**	149,3×52,5×17,4		BSC	+w.i.	[+]	**PF0446**	102×47,1×17,2	OK012
1.4 Multi Air	03/12 →	77	105	ATE		[+]	**PF0427**	149,3×52,5×17,4		BSC	+w.i.	[+]	**PF0446**	102×47,1×17,2	OK012
1.4 Turbo Multi Air	03/12 →	99	135	ATE		[+]	**PF0427**	149,3×52,5×17,4		BSC	+w.i.	[+]	**PF0446**	102×47,1×17,2	OK012
Qubo															
1.3 D Multijet	07/10 →	70	95	BSC		[-]	**PF0430**	122,9×53,4×18	OK012						
1.3 D Multijet	09/08 →	55	75	BSC		[-]	**PF0430**	122,9×53,4×18	OK012						
1.4	09/08 →	54	73	BSC		[-]	**PF0430**	122,9×53,4×18	OK012						

		KW	CV												
				SiS	i	W.i.	MAGNETI MARELLI	W×H×Th (mm)	Extra kit [Opt]	SiS	i	W.i.	MAGNETI MARELLI	W×H×Th (mm)	Extra kit [Opt]
FIAT															
Qubo															
1.4 Natural Power	10/09→	57	78	BSC		[-]	**PF0430**	122,9×53,4×18	OK012						
Qubo Box															
1.3 D Multijet	07/10→	70	95	BSC		[-]	**PF0430**	122,9×53,4×18	OK012						
1.3 D Multijet	09/08→	55	75	BSC		[-]	**PF0430**	122,9×53,4×18	OK012						
1.4	09/08→	54	73	BSC		[-]	**PF0430**	122,9×53,4×18	OK012						
1.4 Natural Power	10/09→	57	78	BSC		[-]	**PF0430**	122,9×53,4×18	OK012						
Regata (138)															
1.3	83→90			BD		[+]	**PF0212**	108,8×47,4×18	OK028						
1.5	83→90			BD		[+]	**PF0212**	108,8×47,4×18	OK028						
1.5	83→90			LG		[+]	**PF0105**	104×66,4×17	OK030						
1.6	83→90			BD		[+]	**PF0212**	108,8×47,4×18	OK028						
1.6	83→90			LG		[+]	**PF0105**	104×66,4×17	OK030						
1.7 D	83→90			BD		[+]	**PF0212**	108,8×47,4×18	OK028						
1.9 D	83→90			BD		[+]	**PF0212**	108,8×47,4×18	OK028						
1.9 D	83→90			LG		[+]	**PF0105**	104×66,4×17	OK030						
1.9 TD	83→90			BD		[+]	**PF0212**	108,8×47,4×18	OK028						
1.9 TD	83→90			LG		[+]	**PF0105**	104×66,4×17	OK030						
Ritmo II (138)															
50 - 60 - 70 - ES/CL 1.1 - 75S - 85S	82→85			BD		[+]	**PF0212**	108,8×47,4×18	OK028						
50 - 60 - 70 - 75 - 85 - 85S	85→			BD		[+]	**PF0212**	108,8×47,4×18	OK028						
1.5 Super	88→		85	LG		[+]	**PF0105**	104×66,4×17	OK030						
Diesel CL - L	82→			BD		[+]	**PF0212**	108,8×47,4×18	OK028						
TD	85→			LG		[+]	**PF0105**	104×66,4×17	OK030						
Ritmo Cabriolet (138)															
1.3	10/79→09/83	48	65	LG		[+]	**PF0105**	104×66,4×17	OK030						
100 1.6	10/85→12/87	74	100	LG		[+]	**PF0105**	104×66,4×17	OK030						
100 1.6	10/85→12/87	77	105	LG		[+]	**PF0105**	104×66,4×17	OK030						
50 1.3	10/85→12/87	50	68	LG		[+]	**PF0105**	104×66,4×17	OK030						
85 1.5	01/80→07/89	63	86	LG		[+]	**PF0105**	104×66,4×17	OK030						
85 1.5	03/83→12/86	60	82	LG		[+]	**PF0105**	104×66,4×17	OK030						
Scudo I (220)															
1.6 EL	95→01/04			BD		[+]	**PF0192**	140×68,8×19	OK067						
1.6 EL	95→01/04			LG		[+]	**PF0787**	129,9×59×19	OK030						
1.8i	97→01/04			BD		[+]	**PF0192**	140×68,8×19	OK067						
1.9 D EL	96→01/04			BD		[+]	**PF0192**	140×68,8×19	OK067						
1.9 D EL	96→01/04			LG		[+]	**PF0787**	129,9×59×19	OK030						
1.9 TD EL	96→01/04			BD		[+]	**PF0192**	140×68,8×19	OK067						
1.9 TD EL	96→01/04			LG		[+]	**PF0787**	129,9×59×19	OK030						

		KW	CV	SiS	i	W.i.	MAGNETI MARELLI	W×H×Th (mm)	Extra kit [Opt]	SiS	i	W.i.	MAGNETI MARELLI	W×H×Th (mm)	Extra kit [Opt]
FIAT															
Scudo II (270_)															
1.9 D	04 → 07			BD		[+]	**PF0192**	140×68,8×19	OK067						
1.9 D	04 → 07			LG		[+]	**PF0787**	129,9×59×19	OK030						
1.9 D	04 → 07			LG		[+]	**PF0182**	146,7×60×19	OK037/ OK017						
2.0 16V	04 → 07			BD		[+]	**PF0192**	140×68,8×19	OK067						
2.0 16V	04 → 07			LG		[+]	**PF0787**	129,9×59×19	OK030						
2.0 16V	04 → 07			LG		[+]	**PF0182**	146,7×60×19	OK037/ OK017						
2.0 JTD	04 → 07			BD		[+]	**PF0192**	140×68,8×19	OK067						
2.0 JTD	04 → 07			LG		[+]	**PF0787**	129,9×59×19	OK030						
2.0 JTD	04 → 07			LG		[+]	**PF0182**	146,7×60×19	OK037/ OK017						
2.0 JTD 16V	04 → 07			BD		[+]	**PF0192**	140×68,8×19	OK067						
2.0 JTD 16V	04 → 07			LG		[+]	**PF0787**	129,9×59×19	OK030						
2.0 JTD 16V	04 → 07			LG		[+]	**PF0182**	146,7×60×19	OK037/ OK017						
Scudo III (270_)															
1.6 D Multijet	01/07 →	66	90	LG	MY07	[+]	**PF0193**	162×67,4×18,3	OK030/ OK059	LG		[-]	**PF0194**	113,5×58,3×16,7	OK030/ OK065
2.0 D Multijet	01/07 →	88	120	LG	MY07	[+]	**PF0193**	162×67,4×18,3	OK030/ OK059	LG		[-]	**PF0194**	113,5×58,3×16,7	OK030/ OK065
2.0 D Multijet	01/07 →	100	136	LG	MY07	[+]	**PF0193**	162×67,4×18,3	OK030/ OK059	LG		[-]	**PF0194**	113,5×58,3×16,7	OK030/ OK065
Sedici															
1.6 16V	06/06 →	88	120	LG		[+]	**PF0241**	131,6×57×16	OK030/ OK054	AK		[+]	**PF0464**	88,9×47,5×14,7	
1.6 16V	06/06 →	79	107	LG		[+]	**PF0241**	131,6×57×16	OK030/ OK054	AK		[+]	**PF0464**	88,9×47,5×14,7	
1.6 16V	03/06 →		107	ST		[+]	**PF0695**	137×53×16,8		AK		[+]	**PF0464**	88,9×47,5×14,7	
1.6 16V 4x4	06/06 →	88	120	LG		[+]	**PF0241**	131,6×57×16	OK030/ OK054	AK		[+]	**PF0464**	88,9×47,5×14,7	
1.6 16V 4x4	06/06 →	79	107	LG		[+]	**PF0241**	131,6×57×16	OK030/ OK054	AK		[+]	**PF0464**	88,9×47,5×14,7	
1.9 D Multijet	06/06 →	88	120	LG		[+]	**PF0241**	131,6×57×16	OK030/ OK054	AK		[+]	**PF0464**	88,9×47,5×14,7	
1.9 Mjt	03/06 →		120	ST		[+]	**PF0695**	137×53×16,8		AK		[+]	**PF0464**	88,9×47,5×14,7	
2.0 D Multijet	06/06 →	99	135	LG		[+]	**PF0241**	131,6×57×16	OK030/ OK054	AK		[+]	**PF0464**	88,9×47,5×14,7	
2.0 D Multijet 4x4	06/06 →	99	135	LG		[+]	**PF0241**	131,6×57×16	OK030/ OK054	AK		[+]	**PF0464**	88,9×47,5×14,7	
2.0 16V	03/06 →			LG		[+]	**PF0241**	131,6×57×16	OK030/ OK054	AK		[+]	**PF0464**	88,9×47,5×14,7	

		KW	CV	SiS	i	W.i.	MAGNETI MARELLI	W×H×Th (mm)	Extra kit [Opt]	SiS	i	W.i.	MAGNETI MARELLI	W×H×Th (mm)	Extra kit [Opt]
FIAT															
Seicento (187)															
0.9	01/98 →	29	39	BD	(187AXA, 187AXA1A) /+shim	[o]	**PF0219**	115×55,6×17	OK029/ OK094						
0.9	01/98 →	29	39	BD	(187AXA, 187AXA1A) /shim	[o]	**PF0220**	115×55,6×17	OK029/ OK094						
1.1	01/98 →	40	54	BD	(187AXB, 187AXB1A) /+shim	[o]	**PF0219**	115×55,6×17	OK029/ OK094						
1.1	01/98 →	40	54	BD	(187AXB, 187AXB1A) /shim	[o]	**PF0220**	115×55,6×17	OK029/ OK094						
Elektra	01/99 →	30	41	BD	(187AEA1A, 187BEA1A) /+shim	[o]	**PF0219**	115×55,6×17	OK029/ OK094						
Elektra	01/99 →	30	41	BD	(187AEA1A, 187BEA1A) /shim	[o]	**PF0220**	115×55,6×17	OK029/ OK094						
Elettrica	03/00 → 10/02	22	30	BD	+shim	[o]	**PF0219**	115×55,6×17	OK029/ OK094						
Elettrica	03/00 → 10/02	22	30	BD	-shim	[o]	**PF0220**	115×55,6×17	OK029/ OK094						
Elettrica	06/98 → 02/00	21	29	BD	+shim	[o]	**PF0219**	115×55,6×17	OK029/ OK094						
Elettrica	06/98 → 02/00	21	29	BD	-shim	[o]	**PF0220**	115×55,6×17	OK029/ OK094						
Seicento Van (187)															
0.9	01/98 →	29	39	BD	(187AXA)/ +shim	[o]	**PF0219**	115×55,6×17	OK029/ OK094						
0.9	01/98 →	29	39	BD	(187AXA)/- shim	[o]	**PF0220**	115×55,6×17	OK029/ OK094						
1.1	01/98 →	40	54	BD	(187CXB/ C)/+shim	[o]	**PF0219**	115×55,6×17	OK029/ OK094						
1.1	01/98 →	40	54	BD	(187CXB/ C)/-shim	[o]	**PF0220**	115×55,6×17	OK029/ OK094						
Siena I (178)															
1.2i 16V	97 → 01			ATE		[+]	**PF0234**	151,5×49×17,8							
1.4i 16V	97 → 01			ATE		[+]	**PF0234**	151,5×49×17,8							
1.4i 16V	04/96 →			ATE		[-]	**PF0235**	151,5×49×17,8							
1.6i 16V	97 → 01			ATE		[+]	**PF0234**	151,5×49×17,8							

		KW	CV													
				SiS	i	W.i.	MAGNETI MARELLI	W×H×Th (mm)	Extra kit [Opt]	SiS	i	W.i.	MAGNETI MARELLI	W×H×Th (mm)	Extra kit [Opt]
FIAT															
Siena II (178) MY02															
1.2 8V	06/02→	57	78	BSC		[-]	**PF0558**	122,9×53,4×18	OK012						
1.2 16V	09/01→	59	80	BSC		[-]	**PF0558**	122,9×53,4×18	OK012						
1.3 JTD	09/03→	51	70	BSC		[-]	**PF0558**	122,9×53,4×18	OK012						
1.6 16V	02→			BSC		[-]	**PF0558**	122,9×53,4×18	OK012						
Stilo Berlina (192)															
1.2 16V	02/02→	59	80	BSC	(192_XA1B)	[+]	**PF0126**	122,9×53,4×18	OK012/ OK040	BSC		[-]	**PF0125**	94,9×42,8×16,4	OK033/ OK040
1.4 16V	01/04→	70	95	BSC		[+]	**PF0126**	122,9×53,4×18	OK012/ OK040	BSC		[-]	**PF0125**	94,9×42,8×16,4	OK033/ OK040
1.4 16V	03/05→	66	90	BSC		[+]	**PF0126**	122,9×53,4×18	OK012/ OK040	BSC		[-]	**PF0125**	94,9×42,8×16,4	OK033/ OK040
1.6	04/05→	100	136	BSC		[+]	**PF0126**	122,9×53,4×18	OK012/ OK040	BSC		[-]	**PF0125**	94,9×42,8×16,4	OK033/ OK040
1.6 16V	05/05→	77	105	BSC		[+]	**PF0126**	122,9×53,4×18	OK012/ OK040	BSC		[-]	**PF0125**	94,9×42,8×16,4	OK033/ OK040
1.6 16V	10/01→	76	103	BSC	(192_XB1A)	[+]	**PF0126**	122,9×53,4×18	OK012/ OK040	BSC		[-]	**PF0125**	94,9×42,8×16,4	OK033/ OK040
1.8	01/04→	76	103	BSC		[+]	**PF0214**	137×57,3×19	OK033/ OK038	BSC		[-]	**PF0125**	94,9×42,8×16,4	OK033/ OK040
1.8	01/04→	90	122	BSC		[+]	**PF0214**	137×57,3×19	OK033/ OK038	BSC		[-]	**PF0125**	94,9×42,8×16,4	OK033/ OK040
1.8	09/05→	84	114	BSC		[+]	**PF0214**	137×57,3×19	OK033/ OK038	BSC		[-]	**PF0125**	94,9×42,8×16,4	OK033/ OK040
1.8 16V	10/01→	98	133	BSC	(192_XC1A)	[+]	**PF0214**	137×57,3×19	OK033/ OK038	BSC		[-]	**PF0125**	94,9×42,8×16,4	OK033/ OK040
1.9 JTD	01/04→	103	140	BSC		[+]	**PF0214**	137×57,3×19	OK033/ OK038	BSC		[-]	**PF0125**	94,9×42,8×16,4	OK033/ OK040
1.9 JTD	09/03→	93	126	BSC		[+]	**PF0214**	137×57,3×19	OK033/ OK038	BSC		[-]	**PF0125**	94,9×42,8×16,4	OK033/ OK040
1.9 JTD	04/04→	100	136	BSC		[+]	**PF0214**	137×57,3×19	OK033/ OK038	BSC		[-]	**PF0125**	94,9×42,8×16,4	OK033/ OK040
1.9 JTD	09/04→	66	90	BSC	(192AXS1B, 192BXS1B)	[+]	**PF0214**	137×57,3×19	OK033/ OK038	BSC		[-]	**PF0125**	94,9×42,8×16,4	OK033/ OK040
1.9 JTD	10/01→	85	115	BSC	(192_ XE1A)	[+]	**PF0214**	137×57,3×19	OK033/ OK038	BSC		[-]	**PF0125**	94,9×42,8×16,4	OK033/ OK040
1.9 JTD	02/02→	59	80	BSC	(192_XF1A)	[+]	**PF0214**	137×57,3×19	OK033/ OK038	BSC		[-]	**PF0125**	94,9×42,8×16,4	OK033/ OK040
1.9 D Multijet	09/05→	88	120	BSC		[+]	**PF0563**	151×57,4×19	OK012/ OK038	BSC		[-]	**PF0125**	94,9×42,8×16,4	OK033/ OK040
1.9 D Multijet	09/05→	110	150	BSC		[+]	**PF0563**	151×57,4×19	OK012/ OK038	BSC		[-]	**PF0125**	94,9×42,8×16,4	OK033/ OK040
1.9 D Multijet	09/05→	74	100	BSC		[+]	**PF0563**	151×57,4×19	OK012/ OK038	BSC		[-]	**PF0125**	94,9×42,8×16,4	OK033/ OK040

		KW	CV	SiS	i	W.i.	MAGNETI MARELLI	W×H×Th (mm)	Extra kit [Opt]	SiS	i	W.i.	MAGNETI MARELLI	W×H×Th (mm)	Extra kit [Opt]
FIAT															
Stilo Berlina (192)															
2.4 20V	01/04 →	123	167	BSC		[+]	**PF0563**	151×57,4×19	OK012/ OK038	BSC		[-]	**PF0125**	94,9×42,8×16,4	OK033/ OK040
2.4 20V	10/01 →	125	170	BSC	(192_XD1A)	[+]	**PF0563**	151×57,4×19	OK012/ OK038	BSC		[-]	**PF0125**	94,9×42,8×16,4	OK033/ OK040
Stilo SW (192)															
1.4 16V	01/04 →	70	95	BSC		[+]	**PF0126**	122,9×53,4×18	OK012/ OK040	BSC		[-]	**PF0125**	94,9×42,8×16,4	OK033/ OK040
1.4 16V	03/05 →	66	90	BSC		[+]	**PF0126**	122,9×53,4×18	OK012/ OK040	BSC		[-]	**PF0125**	94,9×42,8×16,4	OK033/ OK040
1.6 16V	01/03 →	76	103	BSC		[+]	**PF0126**	122,9×53,4×18	OK012/ OK040	BSC		[-]	**PF0125**	94,9×42,8×16,4	OK033/ OK040
1.8	01/04 →	76	103	BSC		[+]	**PF0214**	137×57,3×19	OK033/ OK038	BSC		[-]	**PF0125**	94,9×42,8×16,4	OK033/ OK040
1.8	01/04 →	90	122	BSC		[+]	**PF0214**	137×57,3×19	OK033/ OK038	BSC		[-]	**PF0125**	94,9×42,8×16,4	OK033/ OK040
1.8	09/05 →	84	114	BSC		[+]	**PF0214**	137×57,3×19	OK033/ OK038	BSC		[-]	**PF0125**	94,9×42,8×16,4	OK033/ OK040
1.8 16V	01/03 →	98	133	BSC		[+]	**PF0214**	137×57,3×19	OK033/ OK038	BSC		[-]	**PF0125**	94,9×42,8×16,4	OK033/ OK040
1.9 D	09/04 →	66	90	BSC		[+]	**PF0214**	137×57,3×19	OK033/ OK038	BSC		[-]	**PF0125**	94,9×42,8×16,4	OK033/ OK040
1.9 D Multijet	09/05 →	88	120	BSC		[+]	**PF0563**	151×57,4×19	OK012/ OK038	BSC		[-]	**PF0125**	94,9×42,8×16,4	OK033/ OK040
1.9 D Multijet	09/05 →	110	150	BSC		[+]	**PF0563**	151×57,4×19	OK012/ OK038	BSC		[-]	**PF0125**	94,9×42,8×16,4	OK033/ OK040
1.9 D Multijet	09/05 →	74	100	BSC		[+]	**PF0563**	151×57,4×19	OK012/ OK038	BSC		[-]	**PF0125**	94,9×42,8×16,4	OK033/ OK040
1.9 JTD	01/03 →	59	80	BSC		[+]	**PF0214**	137×57,3×19	OK033/ OK038	BSC		[-]	**PF0125**	94,9×42,8×16,4	OK033/ OK040
1.9 JTD	01/03 →	85	115	BSC		[+]	**PF0214**	137×57,3×19	OK033/ OK038	BSC		[-]	**PF0125**	94,9×42,8×16,4	OK033/ OK040
1.9 JTD	01/04 →	103	140	BSC		[+]	**PF0214**	137×57,3×19	OK033/ OK038	BSC		[-]	**PF0125**	94,9×42,8×16,4	OK033/ OK040
1.9 JTD	09/03 →	93	126	BSC		[+]	**PF0214**	137×57,3×19	OK033/ OK038	BSC		[-]	**PF0125**	94,9×42,8×16,4	OK033/ OK040
1.9 JTD	04/04 →	100	136	BSC		[+]	**PF0214**	137×57,3×19	OK033/ OK038	BSC		[-]	**PF0125**	94,9×42,8×16,4	OK033/ OK040
2.4 20V	01/04 →	123	167	BSC		[+]	**PF0563**	151×57,4×19	OK012/ OK038	BSC		[-]	**PF0125**	94,9×42,8×16,4	OK033/ OK040
Strada (178E)															
1.0	07/09 →	55	75	ATE		[-]	**PF0233**	151,4×52,5×18							
1.2	06/04 →	49	67	ATE		[-]	**PF0233**	151,4×52,5×18							
1.2	06/99 →	54	73	ATE		[-]	**PF0233**	151,4×52,5×18							
1.2	04/03 →	44	60	ATE		[-]	**PF0233**	151,4×52,5×18							

		KW	CV													
				SiS	i	W.i.	MAGNETI MARELLI	W×H×Th (mm)	Extra kit [Opt]	SiS	i	W.i.	MAGNETI MARELLI	W×H×Th (mm)	Extra kit [Opt]
FIAT																
Strada (178E)																
1.2 Trekking	11/05→	60	82	ATE		[-]	**PF0233**	151,4×52,5×18								
1.3 D Multijet	05/06→	62	85	ATE		[-]	**PF0233**	151,4×52,5×18								
1.4	01/06→98	60	82	ATE		[-]	**PF0235**	151,5×49×17,8								
1.4	07/09→	63	86	ATE		[-]	**PF0233**	151,4×52,5×18								
1.6	11/10→	85	116	ATE		[-]	**PF0233**	151,4×52,5×18								
1.6 Trekking	11/05→	76	103	ATE		[-]	**PF0233**	151,4×52,5×18								
1.7 TD	06/99→	51	69	ATE		[-]	**PF0233**	151,4×52,5×18								
1.8	06/04→	81	110	ATE		[-]	**PF0233**	151,4×52,5×18								
1.8	05/06→	84	114	ATE		[-]	**PF0233**	151,4×52,5×18								
1.8	11/10→	96	131	ATE		[-]	**PF0233**	151,4×52,5×18								
1.9 D	12/00→	46	63	ATE		[-]	**PF0233**	151,4×52,5×18								
1.9 JTD	04/03→	59	80	ATE		[-]	**PF0233**	151,4×52,5×18								
Talento (290)																
1.9 D	03/89→03/94	52	71	LG	(290UK)	[+]	**PF0175**	130×71,2×19	OK032							
2.0	03/89→03/94	55	75	LG	(290U4)	[+]	**PF0175**	130×71,2×19	OK032							
1.9 D	03/89→03/94	52	71	LG	(290UEHK)	[+]	**PF0175**	130×71,2×19	OK032							
2.0	03/89→03/94	55	75	LG	(290UEH4)	[+]	**PF0175**	130×71,2×19	OK032							
1.9 D	03/89→03/94	52	71	LG	(290UAK, 290UTK)	[+]	**PF0175**	130×71,2×19	OK032							
2.0	03/89→03/94	55	75	LG	(290UA4)	[+]	**PF0175**	130×71,2×19	OK032							
Tempra Berlina (159)																
1.8 i.e.	03/92→08/96	77	105	LG	(159.AN)	[+]	**PF0105**	104×66,4×17	OK030	LG		[-]	**PF0783**	87,2×44,5×14,3	OK032
1.8 i.e.	03/90→08/96	81	110	LG	(159.AN)	[+]	**PF0105**	104×66,4×17	OK030	LG		[-]	**PF0783**	87,2×44,5×14,3	OK032
1.8 i.e.	09/93→08/96	76	103	LG	(159.AV)	[+]	**PF0105**	104×66,4×17	OK030	LG		[-]	**PF0783**	87,2×44,5×14,3	OK032
1.8 i.e.	09/93→08/96	66	90	LG	(159.AZ)	[+]	**PF0105**	104×66,4×17	OK030	LG		[-]	**PF0783**	87,2×44,5×14,3	OK032
1.8 i.e.	10/94→08/96	74	101	LG	(159.BY)	[+]	**PF0105**	104×66,4×17	OK030	LG		[-]	**PF0783**	87,2×44,5×14,3	OK032
1.9 D	07/91→08/96	48	65	LG	(159.AG)	[+]	**PF0105**	104×66,4×17	OK030	LG		[-]	**PF0783**	87,2×44,5×14,3	OK032
1.9 TD	07/92→08/96	59	80	LG	(159.AQ)	[+]	**PF0105**	104×66,4×17	OK030	LG		[-]	**PF0783**	87,2×44,5×14,3	OK032
1.9 TD	05/90→08/96	66	90	LG	(159.CU, 159.AU, 159.AI, 159.BI)	[+]	**PF0105**	104×66,4×17	OK030	LG		[-]	**PF0783**	87,2×44,5×14,3	OK032
2.0 i.e.	10/90→08/96	83	113	LG	(159.AP)	[+]	**PF0105**	104×66,4×17	OK030	LG		[-]	**PF0783**	87,2×44,5×14,3	OK032
Tempra SW (159)																
1.8 4x4	07/92→06/93	80	109	LG		[+]	**PF0105**	104×66,4×17	OK030	LG		[-]	**PF0783**	87,2×44,5×14,3	OK032
1.8 i.e.	03/92→12/93	77	105	LG	(159.AN)	[+]	**PF0105**	104×66,4×17	OK030	LG		[-]	**PF0783**	87,2×44,5×14,3	OK032
1.8 i.e.	03/90→08/96	81	110	LG	(159.AN)	[+]	**PF0105**	104×66,4×17	OK030	LG		[-]	**PF0783**	87,2×44,5×14,3	OK032
1.8 i.e.	09/93→08/96	76	103	LG	(159.AV)	[+]	**PF0105**	104×66,4×17	OK030	LG		[-]	**PF0783**	87,2×44,5×14,3	OK032
1.8 i.e.	09/93→08/96	66	90	LG	(159.AZ)	[+]	**PF0105**	104×66,4×17	OK030	LG		[-]	**PF0783**	87,2×44,5×14,3	OK032
1.8 i.e.	10/94→08/96	74	101	LG	(159.BY)	[+]	**PF0105**	104×66,4×17	OK030	LG		[-]	**PF0783**	87,2×44,5×14,3	OK032
1.9 D	07/91→08/96	48	65	LG	(159.AG)	[+]	**PF0105**	104×66,4×17	OK030	LG		[-]	**PF0783**	87,2×44,5×14,3	OK032

		KW	CV	SiS	i	W.i.	MAGNETI MARELLI	W×H×Th (mm)	Extra kit [Opt]	SiS	i	W.i.	MAGNETI MARELLI	W×H×Th (mm)	Extra kit [Opt]
FIAT															
Tempra SW (159)															
1.9 TD	07/91 → 02/95	66	90	LG	(159.AI, 159.BI, 159.CU, 159.AU)	[+]	**PF0105**	104×66,4×17	OK030	LG		[-]	**PF0783**	87,2×44,5×14,3	OK032
1.9 TD	03/92 → 06/93	59	80	LG	(159.AQ)	[+]	**PF0105**	104×66,4×17	OK030	LG		[-]	**PF0783**	87,2×44,5×14,3	OK032
2.0 i.e.	01/91 → 03/95	83	113	LG	(159.AP)	[+]	**PF0105**	104×66,4×17	OK030	LG		[-]	**PF0783**	87,2×44,5×14,3	OK032
2.0 i.e. 4x4	03/92 → 03/95	83	113	LG	(159.AP)	[+]	**PF0105**	104×66,4×17	OK030	LG		[-]	**PF0783**	87,2×44,5×14,3	OK032
Tipo (160)															
1.8 i.e	03/93 → 04/95	71	97	LG		[+]	**PF0105**	104×66,4×17	OK030	LG		[-]	**PF0783**	87,2×44,5×14,3	OK032
1.8 i.e.	09/93 → 04/95	66	90	LG		[+]	**PF0105**	104×66,4×17	OK030	LG		[-]	**PF0783**	87,2×44,5×14,3	OK032
1.8 i.e.	10/90 → 06/93	81	110	LG		[+]	**PF0105**	104×66,4×17	OK030	LG		[-]	**PF0783**	87,2×44,5×14,3	OK032
1.8 i.e.	10/94 → 04/95	74	101	LG	(160.AM)	[+]	**PF0105**	104×66,4×17	OK030	LG		[-]	**PF0783**	87,2×44,5×14,3	OK032
1.8 i.e.	10/90 → 06/93	77	105	LG	(160.AY)	[+]	**PF0105**	104×66,4×17	OK030	LG		[-]	**PF0783**	87,2×44,5×14,3	OK032
1.8 i.e.	04/93 → 04/95	76	103	LG	(160.ED)	[+]	**PF0105**	104×66,4×17	OK030	LG		[-]	**PF0783**	87,2×44,5×14,3	OK032
1.8 i.e. 16V	88 →			LG	+ABS	[+]	**PF0105**	104×66,4×17	OK030	LG		[-]	**PF0783**	87,2×44,5×14,3	OK032
1.9 D	07/91 → 08/96	48	65	LG		[+]	**PF0105**	104×66,4×17	OK030						
1.9 TD	03/92 → 06/93	59	80	LG	(160.AW)	[+]	**PF0105**	104×66,4×17	OK030	LG		[-]	**PF0783**	87,2×44,5×14,3	OK032
1.9 TD	09/90 → 04/95	66	90	LG	(160.EL, 160.GL, 160.AQ, 160.EI, 160.AR)	[+]	**PF0105**	104×66,4×17	OK030	LG		[-]	**PF0783**	87,2×44,5×14,3	OK032
2.0	10/90 → 10/92	85	116							LG		[-]	**PF0783**	87,2×44,5×14,3	OK032
2.0 16V	07/91 → 04/95	107	146							LG		[-]	**PF0783**	87,2×44,5×14,3	OK032
2.0 i.e.	06/90 → 03/92	80	109							LG		[-]	**PF0783**	87,2×44,5×14,3	OK032
2.0 i.e.	03/90 → 04/95	83	113							LG		[-]	**PF0783**	87,2×44,5×14,3	OK032
2.0 i.e. 16V Sport	03/93 → 04/95	102	139							LG		[-]	**PF0783**	87,2×44,5×14,3	OK032
Ulysse I (220)															
1.8	05/97 → 08/02	73	99	BD	(220.BB5)	[+]	**PF0192**	140×68,8×19	OK067	ATE		[+]	**PF0788**	123,1×43,1×17	
1.9 TD	02/95 → 08/02	66	90	LG	(220AH5)	[+]	**PF0787**	129,9×59×19	OK030	ATE		[+]	**PF0788**	123,1×43,1×17	
1.9 TD	02/95 → 08/02	66	90	BD	(220AH5)	[+]	**PF0192**	140×68,8×19	OK067	ATE		[-]	**PF0242**	123,1×43,1×17	
2.0	06/94 → 08/02	89	121	LG	(220.AC5)	[+]	**PF0787**	129,9×59×19	OK030	ATE		[+]	**PF0788**	123,1×43,1×17	
2.0	06/94 → 08/02	89	121	BD	(220.AC5)	[+]	**PF0192**	140×68,8×19	OK067	ATE		[-]	**PF0242**	123,1×43,1×17	
2.0 16V	05/98 → 09/00	97	132	LG		[+]	**PF0787**	129,9×59×19	OK030	ATE		[+]	**PF0788**	123,1×43,1×17	
2.0 16V	05/98 → 09/00	97	132	BD		[+]	**PF0192**	140×68,8×19	OK067	ATE		[-]	**PF0242**	123,1×43,1×17	
2.0 16V	09/00 → 08/02	100	136	LG		[+]	**PF0787**	129,9×59×19	OK030	ATE		[+]	**PF0788**	123,1×43,1×17	
2.0 16V	09/00 → 08/02	100	136	BD		[+]	**PF0192**	140×68,8×19	OK067	ATE		[-]	**PF0242**	123,1×43,1×17	
2.0 JTD	10/99 → 08/02	80	109	LG		[+]	**PF0787**	129,9×59×19	OK030	ATE		[+]	**PF0788**	123,1×43,1×17	
2.0 JTD	10/99 → 08/02	80	109	BD		[+]	**PF0192**	140×68,8×19	OK067	ATE		[-]	**PF0242**	123,1×43,1×17	
2.0 Turbo	06/94 → 08/02	108	147	LG	(220.AD5)	[+]	**PF0787**	129,9×59×19	OK030	ATE		[-]	**PF0242**	123,1×43,1×17	
2.0 Turbo	06/94 → 08/02	108	147	BD	(220.AD5)	[+]	**PF0192**	140×68,8×19	OK067	ATE		[-]	**PF0242**	123,1×43,1×17	
2.1 TD	03/96 → 10/99	80	109	LG		[+]	**PF0787**	129,9×59×19	OK030	ATE		[-]	**PF0242**	123,1×43,1×17	
2.1 TD	03/96 → 10/99	80	109	BD		[+]	**PF0192**	140×68,8×19	OK067	ATE		[-]	**PF0242**	123,1×43,1×17	

		KW	CV	SiS	i	W.i.	MAGNETI MARELLI	W×H×Th (mm)	Extra kit [Opt]	SiS	i	W.i.	MAGNETI MARELLI	W×H×Th (mm)	Extra kit [Opt]
FIAT															
Ulysse II (179)															
2.0	08/02 →	100	136	LG		[+]	**PF0182**	146,7×60×19	OK037/ OK017	LG		[-]	**PF0131**	87×53×17	OK039/ OK041
2.0 D Multijet	05/06 →	88	120	LG		[+]	**PF0182**	146,7×60×19	OK037/ OK017	LG		[-]	**PF0131**	87×53×17	OK039/ OK041
2.0 D Multijet	05/06 →	100	136	LG		[+]	**PF0182**	146,7×60×19	OK037/ OK017	LG		[-]	**PF0131**	87×53×17	OK039/ OK041
2.0 JTD	08/02 →	80	109	LG		[+]	**PF0182**	146,7×60×19	OK037/ OK017	LG		[-]	**PF0131**	87×53×17	OK039/ OK041
2.0 JTD	05/03 →	79	107	LG		[+]	**PF0182**	146,7×60×19	OK037/ OK017	LG		[-]	**PF0131**	87×53×17	OK039/ OK041
2.2 JTD	03/08 →	120	163	LG		[+]	**PF0182**	146,7×60×19	OK037/ OK017	LG		[-]	**PF0131**	87×53×17	OK039/ OK041
2.2 JTD	08/02 →	94	128	LG		[+]	**PF0182**	146,7×60×19	OK037/ OK017	LG		[-]	**PF0131**	87×53×17	OK039/ OK041
2.2 D Multijet	03/08 →	125	170							LG		[-]	**PF0131**	87×53×17	OK039/ OK041
3.0 V6	08/02 →	150	204	BR		[+]	**PF0500**	131,8×77,3×15,2		LG		[-]	**PF0131**	87×53×17	OK039/ OK041
Uno (146A/E)															
45 0.9	03/83 → 09/92	33	45	BD		[+]	**PF0212**	108,8×47,4×18	OK028						
45 0.9	02/84 → 12/88	34	46	BD		[+]	**PF0212**	108,8×47,4×18	OK028						
45 1.0	06/86 → 12/93	32	44	BD	(146A.ED)	[+]	**PF0212**	108,8×47,4×18	OK028						
45 1.0	06/86 → 12/93	37	50	BD	(146A.ED)	[+]	**PF0212**	108,8×47,4×18	OK028						
45 1.0i.e.	04/84 → 10/95	33	45	BD		[+]	**PF0212**	108,8×47,4×18	OK028						
50 1.1	01/86 → 12/93	37	50	BD		[+]	**PF0212**	108,8×47,4×18	OK028						
50 1.1i.e.	06/92 → 12/93	36	49	BD		[+]	**PF0212**	108,8×47,4×18	OK028						
55 1.0	04/94 → 08/00	41	56	BD		[+]	**PF0212**	108,8×47,4×18	OK028						
55 1.1	01/83 → 08/89	40	54	BD		[+]	**PF0212**	108,8×47,4×18	OK028						
60 1.1	04/89 → 12/92	42	57	BD		[+]	**PF0212**	108,8×47,4×18	OK028						
60 1.1	05/85 → 08/89	43	58	BD	(146A.EG)	[+]	**PF0212**	108,8×47,4×18	OK028						
60 Diesel 1.7	07/86 → 08/89	44	60	BD		[+]	**PF0212**	108,8×47,4×18	OK028						
60 Diesel 1.7	09/89 → 12/93	42	57	BD		[+]	**PF0212**	108,8×47,4×18	OK028						
70 1.3	05/85 → 08/89	48	65	BD		[+]	**PF0212**	108,8×47,4×18	OK028						
70 1.3	01/83 → 04/85	50	68	BD		[+]	**PF0212**	108,8×47,4×18	OK028						
70 i.e. 1.4	09/89 → 12/93	51	70	BD		[+]	**PF0212**	108,8×47,4×18	OK028						
70 i.e. 1.4	09/89 → 12/93	53	72	BD		[+]	**PF0212**	108,8×47,4×18	OK028						
70 S 1.4	09/89 → 10/92	52	71	BD		[+]	**PF0212**	108,8×47,4×18	OK028						
70 TD 1.4	10/86 → 10/90	52	71	BD		[+]	**PF0212**	108,8×47,4×18	OK028						
75 i.e. 1.5	10/85 → 12/93	55	75	BD		[+]	**PF0212**	108,8×47,4×18	OK028						
1.3 Super Diesel	06/83 → 03/92	33	45	LG		[+]	**PF0105**	104×66,4×17	OK030	LG		[-]	**PF0783**	87,2×44,5×14,3	OK032
1.3 Turbo i.e.	01/87 → 12/87	73	99	LG		[+]	**PF0105**	104×66,4×17	OK030	LG		[-]	**PF0783**	87,2×44,5×14,3	OK032
1.3 Turbo i.e.	04/85 → 08/89	77	105							LG		[-]	**PF0783**	87,2×44,5×14,3	OK032
1.3 Turbo i.e.	09/89 → 03/91	74	101							LG		[-]	**PF0783**	87,2×44,5×14,3	OK032

		KW	CV													
				SiS	i	W.i.	MAGNETI MARELLI	W×H×Th (mm)	Extra kit [Opt]	SiS	i	W.i.	MAGNETI MARELLI	W×H×Th (mm)	Extra kit [Opt]
FIAT															
Uno (146A/E)															
1.4 Turbo i.e.	09/89 → 09/93	82	112							LG		[-]	**PF0783**	87,2×44,5×14,3	OK032
1.4 Turbo i.e.	12/89 → 12/96	87	118							LG		[-]	**PF0783**	87,2×44,5×14,3	OK032
1.5	03/87 → 09/93	53	72	LG		[+]	**PF0105**	104×66,4×17	OK030	LG		[-]	**PF0783**	87,2×44,5×14,3	OK032
1.5 75 iE	01/94 → 10/95	56	76	LG		[+]	**PF0105**	104×66,4×17	OK030	LG		[-]	**PF0783**	87,2×44,5×14,3	OK032
1.5 SPI	10/93 → 01/96	49	67	LG		[+]	**PF0105**	104×66,4×17	OK030	LG		[-]	**PF0783**	87,2×44,5×14,3	OK032
1.6	12/89 → 12/93	65	88	LG		[+]	**PF0105**	104×66,4×17	OK030	LG		[-]	**PF0783**	87,2×44,5×14,3	OK032
1.6 R	12/92 → 12/95	66	90	LG		[+]	**PF0105**	104×66,4×17	OK030	LG		[-]	**PF0783**	87,2×44,5×14,3	OK032
1.7 D	11/94 → 08/00	43	58	LG		[+]	**PF0105**	104×66,4×17	OK030	LG		[-]	**PF0783**	87,2×44,5×14,3	OK032
1.9 D	09/89 → 03/94	44	60	LG		[+]	**PF0105**	104×66,4×17	OK030	LG		[-]	**PF0783**	87,2×44,5×14,3	OK032
1.9 D	01/89 → 12/91	58	79	LG		[+]	**PF0105**	104×66,4×17	OK030	LG		[-]	**PF0783**	87,2×44,5×14,3	OK032
All types	01/83 → 12/93			BD	- w.i.	[o]	**PF0237**	108,8×47,4×18	OK028						
FORD															
B-Max															
1.0 EcoBoost	10/12 →	74	100	LG		[-]	**PF0712**	131,7×60,1×17,6	OK030						
1.0 EcoBoost	10/12 →	88	120	LG		[-]	**PF0712**	131,7×60,1×17,6	OK030						
1.4	10/12 →	66	90	LG		[-]	**PF0712**	131,7×60,1×17,6	OK030						
1.4 LPG	08/13 →	63	86	LG		[-]	**PF0712**	131,7×60,1×17,6	OK030						
1.5 TDCi	10/12 →	55	75	LG		[-]	**PF0712**	131,7×60,1×17,6	OK030						
1.6 Ti	10/12 →	77	105	LG		[-]	**PF0712**	131,7×60,1×17,6	OK030						
1.6 TDCi	10/12 →	70	95	LG		[-]	**PF0712**	131,7×60,1×17,6	OK030						
C-Max I - II															
1.0 EcoBoost	10/12 →	74	100	ATE		[-]	**PF0244**	155,2×62,3×18,2		ATE		[-]	**PF0431**	123,1×52×16,4	
1.0 EcoBoost	10/12 →	92	125	ATE		[-]	**PF0244**	155,2×62,3×18,2		ATE		[-]	**PF0431**	123,1×52×16,4	
1.6	12/10 →	63	85	ATE		[-]	**PF0244**	155,2×62,3×18,2		ATE		[-]	**PF0431**	123,1×52×16,4	
1.6	12/10 →	92	125	ATE		[-]	**PF0244**	155,2×62,3×18,2		ATE		[-]	**PF0431**	123,1×52×16,4	
1.6	12/10 →	77	105	ATE		[-]	**PF0244**	155,2×62,3×18,2		ATE		[-]	**PF0431**	123,1×52×16,4	
1.6 EcoBoost	12/10 →	110	150	ATE		[-]	**PF0244**	155,2×62,3×18,2		ATE		[-]	**PF0431**	123,1×52×16,4	
1.6 EcoBoost	12/10 →	134	182	ATE		[-]	**PF0244**	155,2×62,3×18,2		ATE		[-]	**PF0431**	123,1×52×16,4	
1.6 TDCi	02/07 →	66	90	ATE		[-]	**PF0244**	155,2×62,3×18,2		ATE		[-]	**PF0431**	123,1×52×16,4	
1.6 TDCi	02/07 →	80	109	ATE		[-]	**PF0244**	155,2×62,3×18,2		ATE		[-]	**PF0431**	123,1×52×16,4	
1.6 TDCi	12/10 →	70	95	ATE		[-]	**PF0244**	155,2×62,3×18,2		ATE		[-]	**PF0431**	123,1×52×16,4	
1.6 TDCi	12/10 →	85	115	ATE		[-]	**PF0244**	155,2×62,3×18,2		ATE		[-]	**PF0431**	123,1×52×16,4	
1.8	02/07 →	90	122	ATE		[-]	**PF0244**	155,2×62,3×18,2		ATE		[-]	**PF0431**	123,1×52×16,4	
1.8	02/07 →	92	125	ATE		[-]	**PF0244**	155,2×62,3×18,2		ATE		[-]	**PF0431**	123,1×52×16,4	
1.8 Flexifuel	02/07 →	92	125	ATE		[-]	**PF0244**	155,2×62,3×18,2		ATE		[-]	**PF0431**	123,1×52×16,4	
1.8 TDCi	02/07 →	85	115	ATE		[-]	**PF0244**	155,2×62,3×18,2		ATE		[-]	**PF0431**	123,1×52×16,4	
2.0	02/07 →	107	145	ATE		[-]	**PF0244**	155,2×62,3×18,2		ATE		[-]	**PF0431**	123,1×52×16,4	
2.0 CNG	04/09 →	107	145	ATE		[-]	**PF0244**	155,2×62,3×18,2		ATE		[-]	**PF0431**	123,1×52×16,4	
2.0 LPG	06/08 →	107	145	ATE		[-]	**PF0244**	155,2×62,3×18,2		ATE		[-]	**PF0431**	123,1×52×16,4	
2.0 TDCi	02/07 →	100	136	ATE		[-]	**PF0244**	155,2×62,3×18,2		ATE		[-]	**PF0431**	123,1×52×16,4	
2.0 TDCi	02/08 →	81	110	ATE		[-]	**PF0244**	155,2×62,3×18,2		ATE		[-]	**PF0431**	123,1×52×16,4	
2.0 TDCi	12/10 →	120	163	ATE		[-]	**PF0244**	155,2×62,3×18,2		ATE		[-]	**PF0431**	123,1×52×16,4	
2.0 TDCi	02/11 →	85	115	ATE		[-]	**PF0244**	155,2×62,3×18,2		ATE		[-]	**PF0431**	123,1×52×16,4	

		KW	CV	SiS	i	W.i.	MAGNETI MARELLI	W×H×Th (mm)	Extra kit [Opt]	SiS	i	W.i.	MAGNETI MARELLI	W×H×Th (mm)	Extra kit [Opt]
FORD															
C-Max I - II															
2.0 TDCi	02/11 →	103	140	ATE		[-]	**PF0244**	155,2×62,3×18,2		ATE		[-]	**PF0431**	123,1×52×16,4	
2.0 TDCi	02/11 →	100	136	ATE		[-]	**PF0244**	155,2×62,3×18,2		ATE		[-]	**PF0431**	123,1×52×16,4	
Connect															
1.8 16V	06/02 →	85	116	ATE	Tourneo	[-]	**PF0256**	156,3×62×17,6		ATE		[-]	**PF0431**	123,1×52×16,4	
1.8 Di	06/02 →	55	75	ATE	Tourneo	[-]	**PF0256**	156,3×62×17,6		ATE		[-]	**PF0431**	123,1×52×16,4	
1.8 TDCi	08/06 →	81	110	ATE	Tourneo	[-]	**PF0256**	156,3×62×17,6		ATE		[-]	**PF0431**	123,1×52×16,4	
1.8 Turbo Di	06/02 →	66	90	ATE	Tourneo	[-]	**PF0256**	156,3×62×17,6		ATE		[-]	**PF0431**	123,1×52×16,4	
EcoSport															
1.0 EcoBoost	02/14 →	92	125	ATE		[-]	**PF0244**	155,2×62,3×18,2							
1.0 Ti-VCT Ecoboost	08/12 →	88	120	ATE		[-]	**PF0244**	155,2×62,3×18,2							
1.5 TDCi	02/14 →	66	90	ATE		[-]	**PF0244**	155,2×62,3×18,2							
1.5 Ti	02/14 →	82	112	ATE		[-]	**PF0244**	155,2×62,3×18,2							
1.6 Flex 4x4	08/12 →	81	110	ATE		[-]	**PF0244**	155,2×62,3×18,2							
1.6 Flex	08/12 →	81	110	ATE		[-]	**PF0244**	155,2×62,3×18,2							
2.0 Flex 4x4	08/12 →	104	141	ATE		[-]	**PF0244**	155,2×62,3×18,2							
2.0 Flex	08/12 →	104	141	ATE		[-]	**PF0244**	155,2×62,3×18,2							
2.0	04/04 → 07	105	143	ATE		[-]	**PF0244**	155,2×62,3×18,2							
Escort IV (GAF,AWF,ABFT)															
1.1	12/85 → 07/90	37	50	BD		[-]	**PF0246**	131×57,5×18	OK030						
1.3	01/86 → 07/90	44	60	BD		[-]	**PF0246**	131×57,5×18	OK030						
1.3	11/86 → 07/88	51	69	BD		[-]	**PF0246**	131×57,5×18	OK030						
1.3	07/88 → 10/90	46	63	BD		[-]	**PF0246**	131×57,5×18	OK030						
1.4	01/86 → 07/90	54	73	BD		[-]	**PF0246**	131×57,5×18	OK030						
1.4	01/86 → 07/90	55	75	BD		[-]	**PF0246**	131×57,5×18	OK030						
1.4	10/85 → 10/90	51	70	BD		[-]	**PF0246**	131×57,5×18	OK030						
1.6	04/89 → 07/90	65	88	BD		[-]	**PF0246**	131×57,5×18	OK030						
1.6	01/86 → 12/88	58	79	BD		[-]	**PF0246**	131×57,5×18	OK030						
1.6 D	01/86 → 01/89	40	54	BD		[-]	**PF0246**	131×57,5×18	OK030						
1.6 i	01/86 → 05/90	66	90	BD		[-]	**PF0246**	131×57,5×18	OK030						
1.6 i	08/89 → 07/90	75	102	BD		[-]	**PF0246**	131×57,5×18	OK030						
1.6 Turbo RS	01/86 → 07/90	97	132	BD		[-]	**PF0246**	131×57,5×18	OK030						
1.6 XR3i	01/86 → 08/89	77	105	BD		[-]	**PF0246**	131×57,5×18	OK030						
1.8 D	01/89 → 07/90	44	60	BD		[-]	**PF0246**	131×57,5×18	OK030						
Escort IV Cabriolet (ALF)															
1.4	02/87 → 07/90	54	73	BD		[-]	**PF0246**	131×57,5×18	OK030						
1.4	01/86 → 07/90	55	75	BD		[-]	**PF0246**	131×57,5×18	OK030						
1.6	01/86 → 12/87	58	79	BD		[-]	**PF0246**	131×57,5×18	OK030						
1.6 i	01/86 → 07/90	66	90	BD		[-]	**PF0246**	131×57,5×18	OK030						
1.6 i	08/89 → 07/90	75	102	BD		[-]	**PF0246**	131×57,5×18	OK030						
1.6 XR3i	01/86 → 07/90	77	105	BD		[-]	**PF0246**	131×57,5×18	OK030						

		KW	CV	SiS	i	W.i.	MAGNETI MARELLI	W×H×Th (mm)	Extra kit [Opt]	SiS	i	W.i.	MAGNETI MARELLI	W×H×Th (mm)	Extra kit [Opt]
FORD															
Escort IV SW (AWF,AVF)															
1.1	10/85 → 09/90	37	50	BD		[-]	**PF0246**	131×57,5×18	OK030						
1.3	01/86 → 07/90	44	60	BD		[-]	**PF0246**	131×57,5×18	OK030						
1.3	11/86 → 07/88	51	69	BD		[-]	**PF0246**	131×57,5×18	OK030						
1.4	01/86 → 07/90	54	73	BD		[-]	**PF0246**	131×57,5×18	OK030						
1.4	01/86 → 07/90	55	75	BD		[-]	**PF0246**	131×57,5×18	OK030						
1.4	10/85 → 10/90	51	70	BD		[-]	**PF0246**	131×57,5×18	OK030						
1.6	01/86 → 07/90	58	79	BD		[-]	**PF0246**	131×57,5×18	OK030						
1.6	04/87 → 08/89	75	102	BD		[-]	**PF0246**	131×57,5×18	OK030						
1.6	04/87 → 08/89	77	105	BD		[-]	**PF0246**	131×57,5×18	OK030						
1.6 D	01/86 → 01/89	40	54	BD		[-]	**PF0246**	131×57,5×18	OK030						
1.6 i	01/86 → 07/90	66	90	BD		[-]	**PF0246**	131×57,5×18	OK030						
1.8 D	01/89 → 07/90	44	60	BD		[-]	**PF0246**	131×57,5×18	OK030						
Escort V (GAL)															
1.3	07/90 → 09/92	44	60	BD		[-]	**PF0247**	131×57,5×18							
1.4	07/90 → 09/92	52	71	BD		[-]	**PF0247**	131×57,5×18							
1.6	07/90 → 12/92	77	105	BD		[-]	**PF0247**	131×57,5×18							
1.6	07/90 → 08/92	66	90	BD		[-]	**PF0247**	131×57,5×18							
1.8 16V XR3i	02/92 → 12/92	77	105	BD		[-]	**PF0247**	131×57,5×18							
1.8 16V XR3i	02/92 → 12/92	96	130	BD		[-]	**PF0247**	131×57,5×18							
1.8 D	07/90 → 12/92	44	60	BD		[-]	**PF0247**	131×57,5×18							
RS 2000	05/91 → 12/92	110	150	BD		[-]	**PF0247**	131×57,5×18							
Escort V Cabriolet (ALL)															
1.4	07/90 → 12/92	52	71	BD		[-]	**PF0247**	131×57,5×18							
1.6	07/90 → 12/92	77	105	BD		[-]	**PF0247**	131×57,5×18							
1.8 16V XR3i	02/92 → 12/92	77	105	BD		[-]	**PF0247**	131×57,5×18							
1.8 16V XR3i	02/92 → 12/92	96	130	BD		[-]	**PF0247**	131×57,5×18							
Escort V SW (GAL,AVL)															
1.3	09/91 → 09/92	44	60	BD		[-]	**PF0247**	131×57,5×18							
1.4	07/90 → 09/92	52	71	BD		[-]	**PF0247**	131×57,5×18							
1.6	07/90 → 09/92	77	105	BD		[-]	**PF0247**	131×57,5×18							
1.6	07/90 → 08/92	66	90	BD		[-]	**PF0247**	131×57,5×18							
1.8 16V	02/92 → 12/92	77	105	BD		[-]	**PF0247**	131×57,5×18							
1.8 D	07/90 → 12/92	44	60	BD		[-]	**PF0247**	131×57,5×18							
1.8 TD	05/91 → 12/92	55	75	BD		[-]	**PF0247**	131×57,5×18							
Escort VI (GAL)															
1.3	09/92 → 01/95	44	60	BD		[-]	**PF0247**	131×57,5×18							
1.4	09/92 → 01/95	52	71	BD		[-]	**PF0247**	131×57,5×18							
1.4	01/94 → 01/95	55	75	BD		[-]	**PF0247**	131×57,5×18							
1.6 i 16V	09/92 → 01/95	66	90	BD		[-]	**PF0247**	131×57,5×18							
1.6 i 16V	01/94 → 01/95	65	88	BD		[-]	**PF0247**	131×57,5×18							
1.8 16V XR3i	09/92 → 01/95	96	130	BD		[-]	**PF0247**	131×57,5×18							
1.8 D	09/92 → 01/95	44	60	BD		[-]	**PF0247**	131×57,5×18							
1.8 i 16V	09/92 → 01/95	77	105	BD		[-]	**PF0247**	131×57,5×18							
1.8 TD	02/93 → 01/95	66	90	BD		[-]	**PF0247**	131×57,5×18							

		KW	CV	SiS	i	W.i.	MAGNETI MARELLI	W×H×Th (mm)	Extra kit [Opt]	SiS	i	W.i.	MAGNETI MARELLI	W×H×Th (mm)	Extra kit [Opt]
FORD															
Escort VI (GAL)															
1.8 XR3i 16V 4x4	08/93 → 01/95	77	105	BD		[-]	**PF0247**	131×57,5×18							
1.8 XR3i 16V 4x4	08/93 → 01/95	96	130	BD		[-]	**PF0247**	131×57,5×18							
RS 2000	09/92 → 01/95	110	150	BD		[-]	**PF0247**	131×57,5×18							
RS 2000 4x4	08/93 → 01/95	110	150	BD		[-]	**PF0247**	131×57,5×18							
RS Cosworth 4x4	09/92 → 01/95	162	220	BD		[-]	**PF0247**	131×57,5×18							
Escort VI Cabriolet (ALL)															
1.4	12/92 → 04/94	52	71	BD		[-]	**PF0247**	131×57,5×18							
1.4 i	07/93 → 01/95	55	75	BD		[-]	**PF0247**	131×57,5×18							
1.6 16V XR3i	12/92 → 01/95	66	90	BD		[-]	**PF0247**	131×57,5×18							
1.6 i 16V	02/94 → 01/95	65	88	BD		[-]	**PF0247**	131×57,5×18							
1.8 16V XR3i	12/92 → 01/95	96	130	BD		[-]	**PF0247**	131×57,5×18							
1.8 16V XR3i	12/92 → 01/95	77	105	BD		[-]	**PF0247**	131×57,5×18							
Escort VI SW (GAL)															
1.3	09/92 → 01/95	44	60	BD		[-]	**PF0247**	131×57,5×18							
1.4	01/94 → 01/95	55	75	BD		[-]	**PF0247**	131×57,5×18							
1.4	09/92 → 01/94	52	71	BD		[-]	**PF0247**	131×57,5×18							
1.6 i 16V	09/92 → 01/95	66	90	BD		[-]	**PF0247**	131×57,5×18							
1.6 i 16V	01/94 → 01/95	65	88	BD		[-]	**PF0247**	131×57,5×18							
1.8 D	09/92 → 01/95	44	60	BD		[-]	**PF0247**	131×57,5×18							
1.8 i 16V	02/93 → 01/95	96	130	BD		[-]	**PF0247**	131×57,5×18							
1.8 i 16V	01/93 → 01/95	77	105	BD		[-]	**PF0247**	131×57,5×18							
1.8 TD	02/93 → 01/95	66	90	BD		[-]	**PF0247**	131×57,5×18							
Escort VI 3 Volumi (GAL)															
1.3	08/93 → 01/95	44	60	BD		[-]	**PF0247**	131×57,5×18							
1.4	08/93 → 01/95	55	75	BD		[-]	**PF0247**	131×57,5×18							
1.4	08/93 → 04/94	52	71	BD		[-]	**PF0247**	131×57,5×18							
1.6 i 16V	01/94 → 01/95	65	88	BD		[-]	**PF0247**	131×57,5×18							
1.6 i 16V	08/93 → 01/95	66	90	BD		[-]	**PF0247**	131×57,5×18							
1.8 D	08/93 → 01/95	44	60	BD		[-]	**PF0247**	131×57,5×18							
1.8 i 16V	08/93 → 01/95	77	105	BD		[-]	**PF0247**	131×57,5×18							
1.8 TD	08/93 → 01/95	66	90	BD		[-]	**PF0247**	131×57,5×18							
Escort VII (GAL,AAL,ABL)															
1.3	01/95 → 10/98	44	60	BD		[-]	**PF0247**	131×57,5×18							
1.4	01/95 → 10/98	55	75	BD		[-]	**PF0247**	131×57,5×18							
1.6 16V	01/95 → 10/98	66	90	BD		[-]	**PF0247**	131×57,5×18							
1.6 16V 4x4	01/95 → 10/98	66	90	BD		[-]	**PF0247**	131×57,5×18							
1.6 i 16V	01/95 → 08/95	65	88	BD		[-]	**PF0247**	131×57,5×18							
1.8 16V	01/95 → 10/98	85	115	BD		[-]	**PF0247**	131×57,5×18							
1.8 16V	01/95 → 08/95	77	105	BD		[-]	**PF0247**	131×57,5×18							
1.8 D	01/95 → 12/96	44	60	BD		[-]	**PF0247**	131×57,5×18							
1.8 TD	01/95 → 10/98	66	90	BD		[-]	**PF0247**	131×57,5×18							

		KW	CV	SiS	i	W.i.	MAGNETI MARELLI	W×H×Th (mm)	Extra kit [Opt]	SiS	i	W.i.	MAGNETI MARELLI	W×H×Th (mm)	Extra kit [Opt]
FORD															
Escort VII (GAL,AAL,ABL)															
1.8 Turbo D	12/95 → 10/98	51	70	BD		[-]	**PF0247**	131×57,5×18							
RS 2000	02/95 → 02/98	110	150	BD		[-]	**PF0247**	131×57,5×18							
RS 2000 4x4	02/95 → 10/98	110	150	BD		[-]	**PF0247**	131×57,5×18							
RS Cosworth 4x4	02/95 → 10/98	162	220	BD		[-]	**PF0247**	131×57,5×18							
Escort VII Cabriolet (ALL)															
1.4	02/95 → 08/98	55	75	BD		[-]	**PF0247**	131×57,5×18							
1.6 16V XR3i	02/95 → 12/96	65	88	BD		[-]	**PF0247**	131×57,5×18							
1.6 16V XR3i	02/95 → 09/99	66	90	BD		[-]	**PF0247**	131×57,5×18							
1.8 16V XR3i	10/95 → 08/98	85	115	BD		[-]	**PF0247**	131×57,5×18							
1.8 16V XR3i	02/95 → 08/00	96	130	BD		[-]	**PF0247**	131×57,5×18							
1.8 16V XR3i	02/95 → 08/98	77	105	BD		[-]	**PF0247**	131×57,5×18							
1.8 TD	09/95 → 08/98	66	90	BD		[-]	**PF0247**	131×57,5×18							
1.8 Turbo D	10/96 → 08/99	51	70	BD		[-]	**PF0247**	131×57,5×18							
Escort VII SW (GAL,ANL)															
1.3	01/95 → 10/98	44	60	BD		[-]	**PF0247**	131×57,5×18							
1.4	01/95 → 02/99	55	75	BD		[-]	**PF0247**	131×57,5×18							
1.6 16V	01/95 → 02/99	66	90	BD		[-]	**PF0247**	131×57,5×18							
1.6 i 16V	01/95 → 08/95	65	88	BD		[-]	**PF0247**	131×57,5×18							
1.8 16V	01/95 → 02/99	85	115	BD		[-]	**PF0247**	131×57,5×18							
1.8 16V	01/95 → 08/95	77	105	BD		[-]	**PF0247**	131×57,5×18							
1.8 D	01/95 → 02/99	44	60	BD		[-]	**PF0247**	131×57,5×18							
1.8 TD	01/95 → 02/99	66	90	BD		[-]	**PF0247**	131×57,5×18							
1.8 Turbo D	12/95 → 02/99	51	70	BD		[-]	**PF0247**	131×57,5×18							
Fiesta IV (JA_, JB_)															
All types	09/95 → 04/00			ATE		[-]	**PF0250**	141,4×44,6×17,5							
1.0 i	02/97 → 09/99	38	52	ATE	Vented Disc	[-]	**PF0248**	151,3×46,4×18							
1.0 i	09/99 → 01/02	48	65	ATE	Vented Disc	[-]	**PF0248**	151,3×46,4×18							
1.1	09/95 → 12/96	37	50	ATE	Vented Disc	[-]	**PF0248**	151,3×46,4×18							
1.25 i 16V	08/95 → 01/02	55	75	ATE	Vented Disc	[-]	**PF0248**	151,3×46,4×18							
1.3 i	08/95 → 01/02	37	50	ATE	Vented Disc	[-]	**PF0248**	151,3×46,4×18							
1.3 i	08/95 → 01/02	44	60	ATE	Vented Disc	[-]	**PF0248**	151,3×46,4×18							
1.4 i 16V	04/96 → 01/02	66	90	ATE	Vented Disc	[-]	**PF0248**	151,3×46,4×18							
1.6 16V Sport	02/00 → 01/02	76	103	ATE	Vented Disc	[-]	**PF0248**	151,3×46,4×18							
1.8 D	08/95 → 04/00	44	60	ATE	Vented Disc	[-]	**PF0248**	151,3×46,4×18							
1.8 DI	04/00 → 01/02	55	75	ATE	Vented Disc	[-]	**PF0248**	151,3×46,4×18							
Fiesta V (JH_, JD_)															
1.0	05/02 → 03/08	49	67	ATE	+ABS	[-]	**PF0252**	150,3×58×18,6							
1.2i 16V Ambiente	02/00 → 05			ATE		[-]	**PF0251**	150,3×51×18,6							
1.2i 16V Ambiente	02/00 → 05			ATE	+ABS	[-]	**PF0252**	150,3×58×18,6							
1.2i 16V Four	02/00 → 05			ATE		[-]	**PF0251**	150,3×51×18,6							
1.2i 16V Four	02/00 → 05			ATE	+ABS	[-]	**PF0252**	150,3×58×18,6							

		KW	CV	SiS	i	W.i.	MAGNETI MARELLI	W×H×Th (mm)	Extra kit [Opt]	SiS	i	W.i.	MAGNETI MARELLI	W×H×Th (mm)	Extra kit [Opt]
FORD															
Fiesta V (JH_, JD_)															
1.2i 16V Ghia	02/00 → 05			ATE		[-]	**PF0251**	150,3×51×18,6							
1.2i 16V Ghia	02/00 → 05			ATE	+ABS	[-]	**PF0252**	150,3×58×18,6							
1.2i 16V Zetec	02/00 → 05			ATE		[-]	**PF0251**	150,3×51×18,6							
1.2i 16V Zetec	02/00 → 05			ATE	+ABS	[-]	**PF0252**	150,3×58×18,6							
1.2i My06	01/06 → 10/08			ATE	+ABS	[-]	**PF0252**	150,3×58×18,6							
1.3	11/01 →	44	60	ATE	+ABS	[-]	**PF0252**	150,3×58×18,6							
1.3	11/01 →	51	69	ATE	+ABS	[-]	**PF0252**	150,3×58×18,6							
1.3i 16V	03/03 → 05			ATE	+ABS	[-]	**PF0252**	150,3×58×18,6							
1.4 16V	11/01 →	59	80	ATE	+ABS	[-]	**PF0252**	150,3×58×18,6							
1.4i 16V	02/00 → 05			ATE	+ABS	[-]	**PF0252**	150,3×58×18,6							
1.4i My06	01/06 → 10/08			ATE	+ABS	[-]	**PF0252**	150,3×58×18,6							
1.4 TDci	11/01 → 05			ATE	+ABS	[-]	**PF0252**	150,3×58×18,6							
1.4 TDCi	11/01 →	50	68	ATE	+ABS	[-]	**PF0252**	150,3×58×18,6							
1.6i 16V Zetec S	02/00 → 05			ATE		[-]	**PF0251**	150,3×51×18,6							
1.6 16V	11/01 →	74	100	ATE	+ABS	[-]	**PF0252**	150,3×58×18,6							
1.6i My06	01/06 → 10/08			ATE	+ABS	[-]	**PF0252**	150,3×58×18,6							
1.6 TDCi	11/04 →	66	90	ATE	+ABS	[-]	**PF0252**	150,3×58×18,6							
1.8 TDdi Ambiente	02/00 → 05			ATE		[-]	**PF0251**	150,3×51×18,6							
1.8 TDdi Ambiente	02/00 → 05			ATE	+ABS	[-]	**PF0252**	150,3×58×18,6							
1.8 TDdi Ghia	02/00 → 05			ATE		[-]	**PF0251**	150,3×51×18,6							
1.8 TDdi Ghia	02/00 → 05			ATE	+ABS	[-]	**PF0252**	150,3×58×18,6							
1.8 TDdi Zetec	02/00 → 05			ATE		[-]	**PF0251**	150,3×51×18,6							
1.8 TDdi Zetec	02/00 → 05			ATE	+ABS	[-]	**PF0252**	150,3×58×18,6							
2.0 My06	01/06 → 10/08			ATE	+ABS	[-]	**PF0252**	150,3×58×18,6							
ST150	03/05 →	110	150							LG		[-]	**PF0253**	87,2×42,5×14,5	OK030
Fiesta V Van															
1.3	10/03 →	51	69	ATE	+ABS	[-]	**PF0252**	150,3×58×18,6							
1.3i Courier	02/00 →			ATE		[-]	**PF0251**	150,3×51×18,6							
1.4 TDCi	10/03 →	50	68	ATE	+ABS	[-]	**PF0252**	150,3×58×18,6							
1.4i Courier	02/00 →			ATE		[-]	**PF0251**	150,3×51×18,6							
1.8 Ddi Courier	02/00 →			ATE		[-]	**PF0251**	150,3×51×18,6							
1.8 Ddi Van	02/00 →			ATE		[-]	**PF0251**	150,3×51×18,6							
Fiesta VI															
1.0 Flex	04/10 →	51	69	LG		[-]	**PF0254**	125,7×51.4×16,5	OK033/ OK084						
1.0 Flex	06/09 → 03/10	52	70	LG		[-]	**PF0254**	125,7×51.4×16,5	OK033/ OK084						
1.2	10/08 →	44	60	LG		[-]	**PF0254**	125,7×51.4×16,5	OK033/ OK084						

		KW	CV													
				SiS	i	W.i.	MAGNETI MARELLI	W×H×Th (mm)	Extra kit [Opt]	SiS	i	W.i.	MAGNETI MARELLI	W×H×Th (mm)	Extra kit [Opt]
FORD																
Fiesta VI																
1.2	10/08→	60	82	LG		[-]	**PF0254**	125,7×51.4×16,5	OK033/ OK084						
1.4	10/08→	71	97	LG		[-]	**PF0254**	125,7×51.4×16,5	OK033/ OK084						
1.4 LPG	01/09→	71	97	LG		[-]	**PF0254**	125,7×51.4×16,5	OK033/ OK084						
1.4 TDCi	07/10→	51	70	LG		[-]	**PF0254**	125,7×51.4×16,5	OK033/ OK084						
1.4 TDCi	01/09→	50	68	LG		[-]	**PF0254**	125,7×51.4×16,5	OK033/ OK084						
1.6	10/08→	70	95	LG		[-]	**PF0254**	125,7×51.4×16,5	OK033/ OK084						
1.6 Flex	06/11→	81	110	LG		[-]	**PF0254**	125,7×51.4×16,5	OK033/ OK084						
1.6	04/10→	72	98	LG		[-]	**PF0254**	125,7×51.4×16,5	OK033/ OK084						
1.6 Flex	04/10→	74	101	LG		[-]	**PF0254**	125,7×51.4×16,5	OK033/ OK084						
1.5	09/11→	81	110	LG		[-]	**PF0254**	125,7×51.4×16,5	OK033/ OK084						
1.6 TDCi	10/08→	66	90	LG		[-]	**PF0254**	125,7×51.4×16,5	OK033/ OK084						
1.6 TDCi	10/08→	55	75	LG		[-]	**PF0254**	125,7×51.4×16,5	OK033/ OK084						
1.6 TDCi	02/10→	70	95	LG		[-]	**PF0254**	125,7×51.4×16,5	OK033/ OK084						
1.6 Ti	12/10→	99	134	LG		[-]	**PF0254**	125,7×51.4×16,5	OK033/ OK084						
1.6 Ti	10/08→	88	120	LG		[-]	**PF0254**	125,7×51.4×16,5	OK033/ OK084						
Fiesta Tre volumi VI																
1.0 Flex	04/10→	51	69	LG		[-]	**PF0254**	125,7×51.4×16,5	OK033/ OK084						
1.0 Flex	06/09→ 03/10	52	70	LG		[-]	**PF0254**	125,7×51.4×16,5	OK033/ OK084						
1.6 Flex	09/10→	81	110	LG		[-]	**PF0254**	125,7×51.4×16,5	OK033/ OK084						
1.6	04/10→	72	98	LG		[-]	**PF0254**	125,7×51.4×16,5	OK033/ OK084						
1.6 Flex	04/10→	74	101	LG		[-]	**PF0254**	125,7×51.4×16,5	OK033/ OK084						

		KW	CV	SiS	i	W.i.	MAGNETI MARELLI	W×H×Th (mm)	Extra kit [Opt]	SiS	i	W.i.	MAGNETI MARELLI	W×H×Th (mm)	Extra kit [Opt]
FORD																
Fiesta VI My13																
1.0	09/12 →	48	65	LG		[-]	**PF0254**	125,7×51.4×16,5	OK033						
1.0	09/12 →	59	80	LG		[-]	**PF0254**	125,7×51.4×16,5	OK033						
1.0 EcoBoost	09/12 →	74	101	LG		[-]	**PF0254**	125,7×51.4×16,5	OK033						
1.0 EcoBoost	09/12 →	92	125	LG		[-]	**PF0254**	125,7×51.4×16,5	OK033						
1.4 LPG	09/12 →	68	92	LG		[-]	**PF0254**	125,7×51.4×16,5	OK033						
1.5 TDCi	09/12 →	55	75	LG		[-]	**PF0254**	125,7×51.4×16,5	OK033						
1.6 Ti	09/12 →	77	105	LG		[-]	**PF0254**	125,7×51.4×16,5	OK033						
Fiesta VI Van																
1.25	01/09 →	60	82	LG		[-]	**PF0254**	125,7×51.4×16,5	OK033/ OK084						
1.4 TDCi	07/10 →	51	70	LG		[-]	**PF0254**	125,7×51.4×16,5	OK033/ OK084						
1.4 TDCi	01/09 →	50	68	LG		[-]	**PF0254**	125,7×51.4×16,5	OK033/ OK084						
1.6 TDCi	02/10 →	70	95	LG		[-]	**PF0254**	125,7×51.4×16,5	OK033/ OK084						
1.6 TDCi	01/09 →	66	90	LG		[-]	**PF0254**	125,7×51.4×16,5	OK033/ OK084						
Focus (DAW, DBW)																
1.4 16V	10/98 → 11/04	55	75	ATE		[-]	**PF0255**	177,8×58,4×18,5		LG		[-]	**PF0253**	87,2×42,5×14,5	OK030
1.6 16V	10/98 → 11/04	74	100	ATE		[-]	**PF0255**	177,8×58,4×18,5		LG		[-]	**PF0253**	87,2×42,5×14,5	OK030
1.6 16V Flexifuel	01/02 → 11/04	75	102	ATE		[-]	**PF0255**	177,8×58,4×18,5		LG		[-]	**PF0253**	87,2×42,5×14,5	OK030
1.8 16V	10/98 → 11/04	85	115	ATE		[-]	**PF0255**	177,8×58,4×18,5		LG		[-]	**PF0253**	87,2×42,5×14,5	OK030
1.8 DI / TDDi	08/99 → 11/04	55	75	ATE		[-]	**PF0255**	177,8×58,4×18,5		LG		[-]	**PF0253**	87,2×42,5×14,5	OK030
1.8 TDCi	03/01 → 11/04	85	115	ATE		[-]	**PF0255**	177,8×58,4×18,5		LG		[-]	**PF0253**	87,2×42,5×14,5	OK030
1.8 TDCi	08/02 → 11/04	74	100	ATE		[-]	**PF0255**	177,8×58,4×18,5		LG		[-]	**PF0253**	87,2×42,5×14,5	OK030
1.8 Turbo DI / TDDi	10/98 → 11/04	66	90	ATE		[-]	**PF0255**	177,8×58,4×18,5		LG		[-]	**PF0253**	87,2×42,5×14,5	OK030
2.0 16V	10/98 → 11/04	96	131	ATE		[-]	**PF0255**	177,8×58,4×18,5		LG		[-]	**PF0253**	87,2×42,5×14,5	OK030
ST170	03/02 → 11/04	127	173	ATE		[-]	**PF0256**	156,3×62×17,6		LG		[-]	**PF0253**	87,2×42,5×14,5	OK030
RS	10/02 → 11/04	158	215							LG		[-]	**PF0253**	87,2×42,5×14,5	OK030
Focus SW (DNW)																
1.4 16V	02/99 → 11/04	55	75	ATE		[-]	**PF0255**	177,8×58,4×18,5		LG		[-]	**PF0253**	87,2×42,5×14,5	OK030
1.6 16V	02/99 → 11/04	74	100	ATE		[-]	**PF0255**	177,8×58,4×18,5		LG		[-]	**PF0253**	87,2×42,5×14,5	OK030
1.6 16V Flexifuel	01/02 → 11/04	75	102	ATE		[-]	**PF0255**	177,8×58,4×18,5		LG		[-]	**PF0253**	87,2×42,5×14,5	OK030
1.8 16V	02/99 → 11/04	85	115	ATE		[-]	**PF0255**	177,8×58,4×18,5		LG		[-]	**PF0253**	87,2×42,5×14,5	OK030
1.8 BiFuel	02/03 → 01/05	82	111	ATE		[-]	**PF0255**	177,8×58,4×18,5		LG		[-]	**PF0253**	87,2×42,5×14,5	OK030
1.8 DI / TDDi	08/99 → 11/04	55	75	ATE		[-]	**PF0255**	177,8×58,4×18,5		LG		[-]	**PF0253**	87,2×42,5×14,5	OK030
1.8 TDCi	03/01 → 11/04	85	115	ATE		[-]	**PF0255**	177,8×58,4×18,5		LG		[-]	**PF0253**	87,2×42,5×14,5	OK030
1.8 TDCi	08/02 → 11/04	74	100	ATE		[-]	**PF0255**	177,8×58,4×18,5		LG		[-]	**PF0253**	87,2×42,5×14,5	OK030
1.8 Turbo DI / TDDi	02/99 → 11/04	66	90	ATE		[-]	**PF0255**	177,8×58,4×18,5		LG		[-]	**PF0253**	87,2×42,5×14,5	OK030

		KW	CV	SiS		W.i.	MAGNETI MARELLI	W×H×Th (mm)	Extra kit [Opt]	SiS		W.i.	MAGNETI MARELLI	W×H×Th (mm)	Extra kit [Opt]
FORD															
Focus SW (DNW)															
2.0 16V	02/99 → 11/04	96	131	ATE		[-]	**PF0256**	156,3×62×17,6		LG		[-]	**PF0253**	87,2×42,5×14,5	OK030
Focus C-Max I															
1.6	10/03 → 03/07	74	100	ATE		[-]	**PF0244**	155,2×62,3×18,2		ATE		[-]	**PF0431**	123,1×52×16,4	
1.6	05 → 04/07	74	100	ATE		[-]	**PF0244**	155,2×62,3×18,2		ATE		[-]	**PF0431**	123,1×52×16,4	
1.6 Ti	08/04 → 03/07	85	115	ATE		[-]	**PF0244**	155,2×62,3×18,2		ATE		[-]	**PF0431**	123,1×52×16,4	
1.6 TDCi	10/03 → 03/07	80	109	ATE		[-]	**PF0244**	155,2×62,3×18,2		ATE		[-]	**PF0431**	123,1×52×16,4	
1.6 TDCi	02/05 → 03/07	66	90	ATE		[-]	**PF0244**	155,2×62,3×18,2		ATE		[-]	**PF0431**	123,1×52×16,4	
1.6 TDCi	05 → 04/07	66	90	ATE		[-]	**PF0244**	155,2×62,3×18,2		ATE		[-]	**PF0431**	123,1×52×16,4	
1.8	10/03 → 03/07	88	120	ATE		[-]	**PF0244**	155,2×62,3×18,2		ATE		[-]	**PF0431**	123,1×52×16,4	
1.8	04/04 → 03/07	92	125	ATE		[-]	**PF0244**	155,2×62,3×18,2		ATE		[-]	**PF0431**	123,1×52×16,4	
1.8 TDCi	01/05 → 03/07	85	115	ATE		[-]	**PF0244**	155,2×62,3×18,2		ATE		[-]	**PF0431**	123,1×52×16,4	
1.8 Flexifuel	01/06 → 03/07	92	125	ATE		[-]	**PF0244**	155,2×62,3×18,2		ATE		[-]	**PF0431**	123,1×52×16,4	
2.0	03/04 → 03/07	107	145	ATE		[-]	**PF0244**	155,2×62,3×18,2		ATE		[-]	**PF0431**	123,1×52×16,4	
2.0	05 → 04/07	107	145	ATE		[-]	**PF0244**	155,2×62,3×18,2		ATE		[-]	**PF0431**	123,1×52×16,4	
2.0 TDCi	10/03 → 03/07	100	136	ATE		[-]	**PF0244**	155,2×62,3×18,2		ATE		[-]	**PF0431**	123,1×52×16,4	
2.0 TDCi	10/03 → 03/07	100	136	ATE		[-]	**PF0244**	155,2×62,3×18,2		ATE		[-]	**PF0431**	123,1×52×16,4	
Focus II Berlina (DAW,DBW)															
1.4	11/04 →	59	80	ATE		[-]	**PF0244**	155,2×62,3×18,2		ATE		[-]	**PF0431**	123,1×52×16,4	
1.6	11/04 →	74	100	ATE		[-]	**PF0244**	155,2×62,3×18,2		ATE		[-]	**PF0431**	123,1×52×16,4	
1.6	02/10 →	81	110	ATE		[-]	**PF0244**	155,2×62,3×18,2		ATE		[-]	**PF0431**	123,1×52×16,4	
1.6 LPG	10/09 →	85	115	ATE		[-]	**PF0244**	155,2×62,3×18,2		ATE		[-]	**PF0431**	123,1×52×16,4	
1.6 TDCi	11/04 →	74	100	ATE		[-]	**PF0244**	155,2×62,3×18,2		ATE		[-]	**PF0431**	123,1×52×16,4	
1.6 TDCi	11/04 →	80	109	ATE		[-]	**PF0244**	155,2×62,3×18,2		ATE		[-]	**PF0431**	123,1×52×16,4	
1.6 TDCi	01/05 →	66	90	ATE		[-]	**PF0244**	155,2×62,3×18,2		ATE		[-]	**PF0431**	123,1×52×16,4	
1.6 Ti	11/04 →	85	115	ATE		[-]	**PF0244**	155,2×62,3×18,2		ATE		[-]	**PF0431**	123,1×52×16,4	
1.6 Flex	04/07 → 11/09	77	105	ATE		[-]	**PF0244**	155,2×62,3×18,2		ATE		[-]	**PF0431**	123,1×52×16,4	
1.8	03/06 →	92	125	ATE		[-]	**PF0244**	155,2×62,3×18,2		ATE		[-]	**PF0431**	123,1×52×16,4	
1.8 Flexifuel	01/06 →	92	125	ATE		[-]	**PF0244**	155,2×62,3×18,2		ATE		[-]	**PF0431**	123,1×52×16,4	
1.8 Flexifuel	12/05 →	96	131	ATE		[-]	**PF0244**	155,2×62,3×18,2		ATE		[-]	**PF0431**	123,1×52×16,4	
1.8 TDCi	01/05 →	85	115	ATE		[-]	**PF0244**	155,2×62,3×18,2		ATE		[-]	**PF0431**	123,1×52×16,4	
2.0	11/04 →	107	145	ATE		[-]	**PF0244**	155,2×62,3×18,2		ATE		[-]	**PF0431**	123,1×52×16,4	
2.0 CNG	04/09 →	107	145	ATE		[-]	**PF0244**	155,2×62,3×18,2		ATE		[-]	**PF0431**	123,1×52×16,4	
2.0 LPG	06/08 →	107	145	ATE		[-]	**PF0244**	155,2×62,3×18,2		ATE		[-]	**PF0431**	123,1×52×16,4	
2.0 TDCi	11/04 →	98	133	ATE		[-]	**PF0244**	155,2×62,3×18,2		ATE		[-]	**PF0431**	123,1×52×16,4	
2.0 TDCi	11/04 →	100	136	ATE		[-]	**PF0244**	155,2×62,3×18,2		ATE		[-]	**PF0431**	123,1×52×16,4	
2.0 TDCi	02/08 →	81	110	ATE		[-]	**PF0244**	155,2×62,3×18,2		ATE		[-]	**PF0431**	123,1×52×16,4	
2.0 Flex	04/10 →	105	143	ATE		[-]	**PF0244**	155,2×62,3×18,2		ATE		[-]	**PF0431**	123,1×52×16,4	
2.5 RS	01/09 →	224	305	ATE		[-]	**PF0244**	155,2×62,3×18,2		ATE		[-]	**PF0431**	123,1×52×16,4	
2.5 RS 500	05/10 →	257	350	ATE		[-]	**PF0244**	155,2×62,3×18,2		ATE		[-]	**PF0431**	123,1×52×16,4	
2.5 ST	10/05 →	166	225	ATE		[-]	**PF0244**	155,2×62,3×18,2		ATE		[-]	**PF0431**	123,1×52×16,4	

		KW	CV												
				SiS	i	W.i.	MAGNETI MARELLI	W×H×Th (mm)	Extra kit [Opt]	SiS	i	W.i.	MAGNETI MARELLI	W×H×Th (mm)	Extra kit [Opt]
FORD															
Focus II SW (DAW)															
1.4	11/04 →	59	80	ATE		[-]	PF0244	155,2×62,3×18,2		ATE		[-]	PF0431	123,1×52×16,4	
1.6	11/04 →	74	100	ATE		[-]	PF0244	155,2×62,3×18,2		ATE		[-]	PF0431	123,1×52×16,4	
1.6 LPG	10/09 →	85	115	ATE		[-]	PF0244	155,2×62,3×18,2		ATE		[-]	PF0431	123,1×52×16,4	
1.6 TDCi	11/04 →	74	100	ATE		[-]	PF0244	155,2×62,3×18,2		ATE		[-]	PF0431	123,1×52×16,4	
1.6 TDCi	12/07 →	81	110	ATE		[-]	PF0244	155,2×62,3×18,2		ATE		[-]	PF0431	123,1×52×16,4	
1.6 TDCi	11/04 →	80	109	ATE		[-]	PF0244	155,2×62,3×18,2		ATE		[-]	PF0431	123,1×52×16,4	
1.6 TDCi	11/04 →	66	90	ATE		[-]	PF0244	155,2×62,3×18,2		ATE		[-]	PF0431	123,1×52×16,4	
1.6 Ti	11/04 →	85	115	ATE		[-]	PF0244	155,2×62,3×18,2		ATE		[-]	PF0431	123,1×52×16,4	
1.8	03/06 →	92	125	ATE		[-]	PF0244	155,2×62,3×18,2		ATE		[-]	PF0431	123,1×52×16,4	
1.8 Flexifuel	01/06 →	92	125	ATE		[-]	PF0244	155,2×62,3×18,2		ATE		[-]	PF0431	123,1×52×16,4	
1.8 Flexifuel	12/05 →	97	132	ATE		[-]	PF0244	155,2×62,3×18,2		ATE		[-]	PF0431	123,1×52×16,4	
1.8 TDCi	11/04 →	85	115	ATE		[-]	PF0244	155,2×62,3×18,2		ATE		[-]	PF0431	123,1×52×16,4	
2.0	11/04 →	107	145	ATE		[-]	PF0244	155,2×62,3×18,2		ATE		[-]	PF0431	123,1×52×16,4	
2.0 LPG	06/08 →	107	145	ATE		[-]	PF0244	155,2×62,3×18,2		ATE		[-]	PF0431	123,1×52×16,4	
2.0 TDCi	11/04 →	98	133	ATE		[-]	PF0244	155,2×62,3×18,2		ATE		[-]	PF0431	123,1×52×16,4	
2.0 TDCi	11/04 →	100	136	ATE		[-]	PF0244	155,2×62,3×18,2		ATE		[-]	PF0431	123,1×52×16,4	
2.0 TDCi	02/08 →	81	110	ATE		[-]	PF0244	155,2×62,3×18,2		ATE		[-]	PF0431	123,1×52×16,4	
Focus II 3 Volumi (DAW,DBW)															
1.4	04/05 →	59	80	ATE		[-]	PF0244	155,2×62,3×18,2		ATE		[-]	PF0431	123,1×52×16,4	
1.6	04/05 →	74	100	ATE		[-]	PF0244	155,2×62,3×18,2		ATE		[-]	PF0569	123,1×52×16,4	
1.6	01/10 →	81	110	ATE		[-]	PF0244	155,2×62,3×18,2		ATE		[-]	PF0569	123,1×52×16,4	
1.6 TDCi	04/05 →	66	90	ATE		[-]	PF0244	155,2×62,3×18,2		ATE		[-]	PF0431	123,1×52×16,4	
1.6 TDCi	04/05 →	80	109	ATE		[-]	PF0244	155,2×62,3×18,2		ATE		[-]	PF0569	123,1×52×16,4	
1.6 Ti	04/05 →	85	115	ATE		[-]	PF0244	155,2×62,3×18,2		ATE		[-]	PF0431	123,1×52×16,4	
1.6 Flex	04/07 → 11/09	77	105	ATE		[-]	PF0244	155,2×62,3×18,2		ATE		[-]	PF0431	123,1×52×16,4	
1.6 Flex	01/10 →	80	110	ATE		[-]	PF0244	155,2×62,3×18,2		ATE		[-]	PF0431	123,1×52×16,4	
1.8	03/06 →	92	125	ATE		[-]	PF0244	155,2×62,3×18,2		ATE		[-]	PF0569	123,1×52×16,4	
1.8 Flexifuel	06/06 →	92	125	ATE		[-]	PF0244	155,2×62,3×18,2		ATE		[-]	PF0431	123,1×52×16,4	
1.8 Flexifuel	12/05 →	96	131	ATE		[-]	PF0244	155,2×62,3×18,2		ATE		[-]	PF0431	123,1×52×16,4	
1.8 TDCi	04/05 →	85	115	ATE		[-]	PF0244	155,2×62,3×18,2		ATE		[-]	PF0569	123,1×52×16,4	
2.0	04/05 →	107	145	ATE		[-]	PF0244	155,2×62,3×18,2		ATE		[-]	PF0431	123,1×52×16,4	
2.0 TDCi	04/05 →	100	136	ATE		[-]	PF0244	155,2×62,3×18,2		ATE		[-]	PF0569	123,1×52×16,4	
2.0 TDCi	02/08 →	81	110	ATE		[-]	PF0244	155,2×62,3×18,2		ATE		[-]	PF0431	123,1×52×16,4	
2.0 Flex	04/10 →	105	145	ATE		[-]	PF0244	155,2×62,3×18,2		ATE		[-]	PF0431	123,1×52×16,4	
2.5 ST	10/05 →			ATE		[-]	PF0244	155,2×62,3×18,2		ATE		[-]	PF0431	123,1×52×16,4	
Focus II CC															
1.6	10/06 →	74	100	ATE		[-]	PF0244	155,2×62,3×18,2							
2.0	10/06 →	107	145	ATE		[-]	PF0244	155,2×62,3×18,2							
2.0 TDCi	10/06 →	100	136	ATE		[-]	PF0244	155,2×62,3×18,2							
Focus III															
1.0 EcoBoost	02/12 →	92	125	ATE		[-]	PF0244	155,2×62,3×18,2		ATE		[-]	PF0431	123,1×52×16,4	
1.0 EcoBoost	02/12 →	74	100	ATE		[-]	PF0244	155,2×62,3×18,2		ATE		[-]	PF0431	123,1×52×16,4	
1.6 EcoBoost	04/11 →	110	150	ATE		[-]	PF0244	155,2×62,3×18,2		ATE		[-]	PF0431	123,1×52×16,4	
1.6 EcoBoost	04/11 →	134	182	ATE		[-]	PF0244	155,2×62,3×18,2		ATE		[-]	PF0431	123,1×52×16,4	

		KW	CV	SiS	i	W.i.	MAGNETI MARELLI	W×H×Th (mm)	Extra kit [Opt]	SiS	i	W.i.	MAGNETI MARELLI	W×H×Th (mm)	Extra kit [Opt]
FORD															
Focus III															
1.6 Flexifuel	04/11→	88	120	ATE		[-]	PF0244	155,2×62,3×18,2		ATE		[-]	PF0431	123,1×52×16,4	
1.6 TDCi	04/11→	70	95	ATE		[-]	PF0244	155,2×62,3×18,2		ATE		[-]	PF0431	123,1×52×16,4	
1.6 TDCi	04/11→	85	115	ATE		[-]	PF0244	155,2×62,3×18,2		ATE		[-]	PF0431	123,1×52×16,4	
1.6 Ti	08/11→	63	85	ATE		[-]	PF0244	155,2×62,3×18,2		ATE		[-]	PF0431	123,1×52×16,4	
1.6 Ti	04/11→	77	105	ATE		[-]	PF0244	155,2×62,3×18,2		ATE		[-]	PF0431	123,1×52×16,4	
1.6 Ti	04/11→	92	125	ATE		[-]	PF0244	155,2×62,3×18,2		ATE		[-]	PF0431	123,1×52×16,4	
1.6 LPG	02/12→	88	120	ATE		[-]	PF0244	155,2×62,3×18,2		ATE		[-]	PF0431	123,1×52×16,4	
1.6 TDCi ECOnetic	05/12→	77	105	ATE		[-]	PF0244	155,2×62,3×18,2		ATE		[-]	PF0431	123,1×52×16,4	
2.0 TDCi	04/11→	85	115	ATE		[-]	PF0244	155,2×62,3×18,2		ATE		[-]	PF0431	123,1×52×16,4	
2.0 TDCi	04/11→	103	140	ATE		[-]	PF0244	155,2×62,3×18,2		ATE		[-]	PF0431	123,1×52×16,4	
2.0 TDCi	04/11→	120	163	ATE		[-]	PF0244	155,2×62,3×18,2		ATE		[-]	PF0431	123,1×52×16,4	
2.0 ST	07/12→	184	250	ATE		[-]	PF0743	180,1×54,4×17,4		ATE		[-]	PF0431	123,1×52×16,4	
Focus III Tre Volumi															
1.0 EcoBoost	02/12→	74	100	ATE		[-]	PF0244	155,2×62,3×18,2		ATE		[-]	PF0431	123,1×52×16,4	
1.0 EcoBoost	02/12→	92	125	ATE		[-]	PF0244	155,2×62,3×18,2		ATE		[-]	PF0431	123,1×52×16,4	
1.6	04/11→	77	105	ATE		[-]	PF0244	155,2×62,3×18,2		ATE		[-]	PF0431	123,1×52×16,4	
1.6	04/11→	92	125	ATE		[-]	PF0244	155,2×62,3×18,2		ATE		[-]	PF0431	123,1×52×16,4	
1.6 EcoBoost	04/11→	110	150	ATE		[-]	PF0244	155,2×62,3×18,2		ATE		[-]	PF0431	123,1×52×16,4	
1.6 EcoBoost	04/11→	134	182	ATE		[-]	PF0244	155,2×62,3×18,2		ATE		[-]	PF0431	123,1×52×16,4	
1.6 Flexifuel	04/11→	88	120	ATE		[-]	PF0244	155,2×62,3×18,2		ATE		[-]	PF0431	123,1×52×16,4	
1.6 Ti	08/11→	63	85	ATE		[-]	PF0244	155,2×62,3×18,2		ATE		[-]	PF0431	123,1×52×16,4	
1.6 TDCi	04/11→	70	95	ATE		[-]	PF0244	155,2×62,3×18,2		ATE		[-]	PF0431	123,1×52×16,4	
1.6 TDCi	04/11→	85	115	ATE		[-]	PF0244	155,2×62,3×18,2		ATE		[-]	PF0431	123,1×52×16,4	
2.0 TDCi	04/11→	85	115	ATE		[-]	PF0244	155,2×62,3×18,2		ATE		[-]	PF0431	123,1×52×16,4	
2.0 TDCi	04/11→	100	136	ATE		[-]	PF0244	155,2×62,3×18,2		ATE		[-]	PF0431	123,1×52×16,4	
2.0 TDCi	04/11→	103	140	ATE		[-]	PF0244	155,2×62,3×18,2		ATE		[-]	PF0431	123,1×52×16,4	
2.0 TDCi	04/11→	120	163	ATE		[-]	PF0244	155,2×62,3×18,2		ATE		[-]	PF0431	123,1×52×16,4	
Focus III SW															
1.0 EcoBoost	02/12→	74	100	ATE		[-]	PF0244	155,2×62,3×18,2		ATE		[-]	PF0431	123,1×52×16,4	
1.0 EcoBoost	02/12→	92	125	ATE		[-]	PF0244	155,2×62,3×18,2		ATE		[-]	PF0431	123,1×52×16,4	
1.6 EcoBoost	05/11→	110	150	ATE		[-]	PF0244	155,2×62,3×18,2		ATE		[-]	PF0431	123,1×52×16,4	
1.6 EcoBoost	05/11→	134	182	ATE		[-]	PF0244	155,2×62,3×18,2		ATE		[-]	PF0431	123,1×52×16,4	
1.6 Flexifuel	05/11→	88	120	ATE		[-]	PF0244	155,2×62,3×18,2		ATE		[-]	PF0431	123,1×52×16,4	
1.6 Ti	08/11→	63	85	ATE		[-]	PF0244	155,2×62,3×18,2		ATE		[-]	PF0431	123,1×52×16,4	
1.6 LPG	02/12→	88	120	ATE		[-]	PF0244	155,2×62,3×18,2		ATE		[-]	PF0431	123,1×52×16,4	
1.6 TDCi	05/11→	70	95	ATE		[-]	PF0244	155,2×62,3×18,2		ATE		[-]	PF0431	123,1×52×16,4	
1.6 TDCi	05/11→	85	115	ATE		[-]	PF0244	155,2×62,3×18,2		ATE		[-]	PF0431	123,1×52×16,4	
1.6 Ti	05/11→	77	105	ATE		[-]	PF0244	155,2×62,3×18,2		ATE		[-]	PF0431	123,1×52×16,4	
1.6 Ti	05/11→	92	125	ATE		[-]	PF0244	155,2×62,3×18,2		ATE		[-]	PF0431	123,1×52×16,4	
2.0 TDCi	05/11→	85	115	ATE		[-]	PF0244	155,2×62,3×18,2		ATE		[-]	PF0431	123,1×52×16,4	
2.0 TDCi	05/11→	100	136	ATE		[-]	PF0244	155,2×62,3×18,2		ATE		[-]	PF0431	123,1×52×16,4	
2.0 TDCi	05/11→	103	140	ATE		[-]	PF0244	155,2×62,3×18,2		ATE		[-]	PF0431	123,1×52×16,4	
2.0 TDCi	05/11→	120	163	ATE		[-]	PF0244	155,2×62,3×18,2		ATE		[-]	PF0431	123,1×52×16,4	

		KW	CV	SiS	i	W.i.	MAGNETI MARELLI	W×H×Th (mm)	Extra kit [Opt]	SiS	i	W.i.	MAGNETI MARELLI	W×H×Th (mm)	Extra kit [Opt]
FORD															
Focus III SW															
2.0 ST	07/12→	184	250	ATE		[-]	**PF0743**	180,1×54,4×17,4		ATE		[-]	**PF0431**	123,1×52×16,4	
Fusion (JU)															
1.25	08/04→	55	75	ATE	+ABS	[-]	**PF0252**	150,3×58×18,6							
1.3	11/02→	44	60	ATE	+ABS	[-]	**PF0252**	150,3×58×18,6							
1.4	08/02→	59	80	ATE	+ABS	[-]	**PF0252**	150,3×58×18,6							
1.4 TDCi	08/02→	50	68	ATE	+ABS	[-]	**PF0252**	150,3×58×18,6							
1.6	08/02→	74	100	ATE	+ABS	[-]	**PF0252**	150,3×58×18,6							
1.6 TDCi	11/04→	66	90	ATE	+ABS	[-]	**PF0252**	150,3×58×18,6							
Fusion My07 (JU)															
1.4 16V	01/07→			ATE	+ABS	[-]	**PF0252**	150,3×58×18,6							
1.4 TDci	01/07→			ATE	+ABS	[-]	**PF0252**	150,3×58×18,6							
1.6 16V	01/07→			ATE	+ABS	[-]	**PF0252**	150,3×58×18,6							
1.6 TDci	01/07→			ATE	+ABS	[-]	**PF0252**	150,3×58×18,6							
Galaxy I (WGR)															
1.9 TDI	95→06			ATE		[-]	**PF0260**	156,4×74,2×19		LG		[-]	**PF0131**	87×53×17	OK039/ OK041
1.9 TDI	05/00→06			ATE	16"	[+]	**PF0262**	156,4×78,7×19		LG		[+]	**PF0259**	87×53×17	OK039
1.9 TDI	05/00→06			ATE	SOHC/16"/- V6/-w.i.	[-]	**PF0540**	156,4×78,7×19		LG		[+]	**PF0259**	87×53×17	OK039
2.0i	95→06			ATE		[-]	**PF0260**	156,4×74,2×19		LG		[-]	**PF0131**	87×53×17	OK039/ OK041
2.0i	05/00→06			ATE	16"	[+]	**PF0262**	156,4×78,7×19		LG		[+]	**PF0259**	87×53×17	OK039
2.0i	05/00→06			ATE	SOHC/16"/- V6/-w.i.	[-]	**PF0540**	156,4×78,7×19		LG		[+]	**PF0259**	87×53×17	OK039
2.3i 16V	95→06			ATE		[-]	**PF0260**	156,4×74,2×19		LG		[-]	**PF0131**	87×53×17	OK039/ OK041
2.3i 16V	05/00→06			ATE	16"	[+]	**PF0262**	156,4×78,7×19		LG		[+]	**PF0259**	87×53×17	OK039
2.3i 16V	05/00→06			ATE	SOHC/16"/- V6/-w.i.	[-]	**PF0540**	156,4×78,7×19		LG		[+]	**PF0259**	87×53×17	OK039
2.8i 16V	95→06			ATE		[-]	**PF0260**	156,4×74,2×19		LG		[-]	**PF0131**	87×53×17	OK039/ OK041
2.8i 16V	95→06			ATE	16"	[+]	**PF0262**	156,4×78,7×19		LG		[+]	**PF0259**	87×53×17	OK039
2.8i 16V	95→06			ATE	SOHC/16"/- V6/-w.i.	[-]	**PF0540**	156,4×78,7×19		LG		[+]	**PF0259**	87×53×17	OK039
2.8i V6 4x4	00→06									LG	+2 w.i.	[+]	**PF0258**	94,9×51×16,8	OK030
2.8i V6	00→06									LG	+2 w.i.	[+]	**PF0258**	94,9×51×16,8	OK030
Galaxy II															
1.6 EcoBoost	02/11→	118	160	ATE		[-]	**PF0263**	155,2×66,6×19,2		LG	+EPB	[-]	**PF0264**	106,3×48,6×16,8	OK030/ OK083
1.6 EcoBoost	02/11→	118	160	ATE		[-]	**PF0263**	155,2×66,6×19,2		LG	-EPB	[-]	**PF0257**	95,2×43,2×15,8	OK030/ OK082
1.6 TDCi	02/11→	85	115	ATE		[-]	**PF0263**	155,2×66,6×19,2		LG	+EPB	[-]	**PF0264**	106,3×48,6×16,8	OK030/ OK083

		KW	CV													
				SiS	i	W.i.	MAGNETI MARELLI	W×H×Th (mm)	Extra kit [Opt]	SiS	i	W.i.	MAGNETI MARELLI	W×H×Th (mm)	Extra kit [Opt]
FORD															
Galaxy II															
1.6 TDCi	02/11→	85	115	ATE		[-]	**PF0263**	155,2×66,6×19,2		LG	-EPB	[-]	**PF0257**	95,2×43,2×15,8	OK030/ OK082
1.8 TDCi	05/06→	74	100	ATE		[-]	**PF0263**	155,2×66,6×19,2		LG	+EPB	[-]	**PF0264**	106,3×48,6×16,8	OK030/ OK083
1.8 TDCi	05/06→	74	100	ATE		[-]	**PF0263**	155,2×66,6×19,2		LG	+EPB	[-]	**PF0264**	106,3×48,6×16,8	OK030/ OK083
1.8 TDCi	05/06→	92	125	ATE		[-]	**PF0263**	155,2×66,6×19,2		LG	-EPB	[-]	**PF0257**	95,2×43,2×15,8	OK030/ OK082
1.8 TDCi	05/06→	92	125	ATE		[-]	**PF0263**	155,2×66,6×19,2		LG	-EPB	[-]	**PF0257**	95,2×43,2×15,8	OK030/ OK082
2.0	05/06→	107	145	ATE		[-]	**PF0263**	155,2×66,6×19,2		LG	+EPB	[-]	**PF0264**	106,3×48,6×16,8	OK030/ OK083
2.0	05/06→	107	145	ATE		[-]	**PF0263**	155,2×66,6×19,2		LG	-EPB	[-]	**PF0257**	95,2×43,2×15,8	OK030/ OK082
2.0 Flexifuel	05/06→	107	145	ATE		[-]	**PF0263**	155,2×66,6×19,2		LG	+EPB	[-]	**PF0264**	106,3×48,6×16,8	OK030/ OK083
2.0 Flexifuel	05/06→	107	145	ATE		[-]	**PF0263**	155,2×66,6×19,2		LG	-EPB	[-]	**PF0257**	95,2×43,2×15,8	OK030/ OK082
2.0 TDCi	05/06→	100	136	ATE		[-]	**PF0263**	155,2×66,6×19,2		LG	+EPB	[-]	**PF0264**	106,3×48,6×16,8	OK030/ OK083
2.0 TDCi	05/06→	100	136	ATE		[-]	**PF0263**	155,2×66,6×19,2		LG	-EPB	[-]	**PF0257**	95,2×43,2×15,8	OK030/ OK082
2.0 TDCi	05/06→	96	130	ATE		[-]	**PF0263**	155,2×66,6×19,2		LG	+EPB	[-]	**PF0264**	106,3×48,6×16,8	OK030/ OK083
2.0 TDCi	05/06→	96	130	ATE		[-]	**PF0263**	155,2×66,6×19,2		LG	-EPB	[-]	**PF0257**	95,2×43,2×15,8	OK030/ OK082
2.0 TDCi	05/06→	103	140	ATE		[-]	**PF0263**	155,2×66,6×19,2		LG	+EPB	[-]	**PF0264**	106,3×48,6×16,8	OK030/ OK083
2.0 TDCi	05/06→	103	140	ATE		[-]	**PF0263**	155,2×66,6×19,2		LG	-EPB	[-]	**PF0257**	95,2×43,2×15,8	OK030/ OK082
2.0 TDCi	11/07→	85	115	ATE		[-]	**PF0263**	155,2×66,6×19,2		LG	+EPB	[-]	**PF0264**	106,3×48,6×16,8	OK030/ OK083
2.0 TDCi	11/07→	85	115	ATE		[-]	**PF0263**	155,2×66,6×19,2		LG	-EPB	[-]	**PF0257**	95,2×43,2×15,8	OK030/ OK082
2.0 TDCi	03/10→	120	163	ATE		[-]	**PF0263**	155,2×66,6×19,2		LG	+EPB	[-]	**PF0264**	106,3×48,6×16,8	OK030/ OK083
2.0 TDCi	03/10→	120	163	ATE		[-]	**PF0263**	155,2×66,6×19,2		LG	-EPB	[-]	**PF0257**	95,2×43,2×15,8	OK030/ OK082
2.0 SCTi	03/10→	149	203	ATE		[-]	**PF0263**	155,2×66,6×19,2		LG	-EPB	[-]	**PF0257**	95,2×43,2×15,8	OK030/ OK082
2.0 SCTi	03/10→	149	203	ATE		[-]	**PF0263**	155,2×66,6×19,2		LG	+EPB	[-]	**PF0264**	106,3×48,6×16,8	OK030/ OK083
2.2 TDCi	07/10→	147	200	ATE		[-]	**PF0263**	155,2×66,6×19,2		LG	-EPB	[-]	**PF0257**	95,2×43,2×15,8	OK030/ OK082

		KW	CV													
				SiS	i	W.i.	MAGNETI MARELLI	W×H×Th (mm)	Extra kit [Opt]	SiS	i	W.i.	MAGNETI MARELLI	W×H×Th (mm)	Extra kit [Opt]
FORD																
Galaxy II																
2.2 TDCi	03/08 →	129	175	ATE		[-]	**PF0263**	155,2×66,6×19,2		LG	-EPB	[-]	**PF0257**	95,2×43,2×15,8	OK030/ OK082
2.3	07/07 →	118	160	ATE		[-]	**PF0263**	155,2×66,6×19,2		LG	-EPB	[-]	**PF0257**	95,2×43,2×15,8	OK030/ OK082
Grand C-Max															
1.6	12/10 →	77	105	ATE		[-]	**PF0244**	155,2×62,3×18,2		ATE		[-]	**PF0431**	123,1×52×16,4	
1.6	12/10 →	92	125	ATE		[-]	**PF0244**	155,2×62,3×18,2		ATE		[-]	**PF0431**	123,1×52×16,4	
1.6 EcoBoost	12/10 →	110	150	ATE		[-]	**PF0244**	155,2×62,3×18,2		ATE		[-]	**PF0431**	123,1×52×16,4	
1.6 EcoBoost	12/10 →	134	182	ATE		[-]	**PF0244**	155,2×62,3×18,2		ATE		[-]	**PF0431**	123,1×52×16,4	
1.6 TDCi	12/10 →	70	95	ATE		[-]	**PF0244**	155,2×62,3×18,2		ATE		[-]	**PF0431**	123,1×52×16,4	
1.6 TDCi	12/10 →	85	115	ATE		[-]	**PF0244**	155,2×62,3×18,2		ATE		[-]	**PF0431**	123,1×52×16,4	
2.0 TDCi	12/10 →	120	163	ATE		[-]	**PF0244**	155,2×62,3×18,2		ATE		[-]	**PF0431**	123,1×52×16,4	
2.0 TDCi	02/11 →	85	115	ATE		[-]	**PF0244**	155,2×62,3×18,2		ATE		[-]	**PF0431**	123,1×52×16,4	
2.0 TDCi	02/11 →	103	140	ATE		[-]	**PF0244**	155,2×62,3×18,2		ATE		[-]	**PF0431**	123,1×52×16,4	
2.0 TDCi	02/11 →	100	136	ATE		[-]	**PF0244**	155,2×62,3×18,2		ATE		[-]	**PF0431**	123,1×52×16,4	
Ka I (RB)															
All types	96 → 00			ATE	Vented Disc	[-]	**PF0248**	151,3×46,4×18							
1.0 i	07/97 → 09/99	38	52	ATE		[-]	**PF0250**	141,4×44,6×17,5							
1.0 i	09/99 → 11/08	48	65	ATE		[-]	**PF0251**	150,3×51×18,6							
1.3 i	08/02 → 11/08	51	70	ATE		[-]	**PF0251**	150,3×51×18,6							
1.3 i	06/98 → 11/08	36	49	ATE		[-]	**PF0251**	150,3×51×18,6							
1.3 i	09/96 → 11/08	44	60	ATE		[-]	**PF0251**	150,3×51×18,6							
1.3 i	09/96 → 10/02	37	50	ATE		[-]	**PF0251**	150,3×51×18,6							
1.6	10/06 → 12/07	68	92	ATE	+ABS	[-]	**PF0252**	150,3×58×18,6							
1.6 i	07/03 → 11/08	70	95	ATE	+ABS	[-]	**PF0252**	150,3×58×18,6							
Ka II (B420)															
1.0	11/10 →	48	65	BD	+2 w.i. (EURO 5-6)	[-]	**PF0453**	115×55,6×17	OK029						
1.0	10/08 → 11/10	48	65	BD	+1 w.i.	[-]	**PF0454**	115×55,6×17	OK029						
1.0 Flex	11/10 →	51	69	BD	+2 w.i. (EURO 5-6)	[-]	**PF0453**	115×55,6×17	OK029						
1.0 Flex	10/08 → 11/10	51	69	BD	+1 w.i.	[-]	**PF0454**	115×55,6×17	OK029						
1.2	11/10 →	51	69	BD	+2 w.i. (EURO 5-6)	[-]	**PF0453**	115×55,6×17	OK029						
1.2	10/08 → 11/10	51	69	BD	+1 w.i.	[-]	**PF0454**	115×55,6×17	OK029						
1.3 TDCi	10/08 →	55	75	BSC	+1 w.i.	[+]	**PF0215**	122,9×51,7×17,5	OK012/ OK040						
1.6	10/08 →	70	95	BSC	+1 w.i.	[+]	**PF0215**	122,9×51,7×17,5	OK012/ OK040						
1.6 Flex	10/08 →	75	102	BSC	+1 w.i.	[+]	**PF0215**	122,9×51,7×17,5	OK012/ OK040						

		KW	CV												
				SiS	i	W.i.	MAGNETI MARELLI	W×H×Th (mm)	Extra kit [Opt]	SiS	i	W.i.	MAGNETI MARELLI	W×H×Th (mm)	Extra kit [Opt]
FORD															
Kuga															
2.0 TDCi	03/08 →	100	136	ATE		[-]	**PF0244**	155,2×62,3×18,2		LG		[-]	**PF0257**	95,2×43,2×15,8	OK030/ OK082
2.0 TDCi	03/10 →	103	140	ATE		[-]	**PF0244**	155,2×62,3×18,2		LG		[-]	**PF0257**	95,2×43,2×15,8	OK030/ OK082
2.0 TDCi 4x4	03/08 →	100	136	ATE		[-]	**PF0244**	155,2×62,3×18,2		LG		[-]	**PF0257**	95,2×43,2×15,8	OK030/ OK082
2.0 TDCi 4x4	03/10 →	103	140	ATE		[-]	**PF0244**	155,2×62,3×18,2		LG		[-]	**PF0257**	95,2×43,2×15,8	OK030/ OK082
2.0 TDCi 4x4	03/10 →	120	163	ATE		[-]	**PF0244**	155,2×62,3×18,2		LG		[-]	**PF0257**	95,2×43,2×15,8	OK030/ OK082
2.5	03/09 →	147	200	ATE		[-]	**PF0244**	155,2×62,3×18,2		LG		[-]	**PF0257**	95,2×43,2×15,8	OK030/ OK082
2.5 4x4	03/09 →	147	200	ATE		[-]	**PF0244**	155,2×62,3×18,2		LG		[-]	**PF0257**	95,2×43,2×15,8	OK030/ OK082
Kuga II															
1.6 EcoBoost	03/13 →	110	150	ATE	Ø Disc 300	[-]	**PF0604**	155,2×62,3×18		ATE		[-]	**PF0796**	123,1×52×15,3	
1.6 EcoBoost	03/13 →	134	182	ATE	4x4	[-]	**PF0743**	180,1×54,4×17,4		ATE		[-]	**PF0796**	123,1×52×15,3	
1.6	03/13 →	133	181	ATE	4x4	[-]	**PF0743**	180,1×54,4×17,4		ATE		[-]	**PF0796**	123,1×52×15,3	
2.0 TDCi	03/13 →	100	136	ATE		[-]	**PF0743**	180,1×54,4×17,4		ATE		[-]	**PF0796**	123,1×52×15,3	
2.0 TDCi	03/13 →	100	136	ATE	4x4	[-]	**PF0743**	180,1×54,4×17,4		ATE		[-]	**PF0796**	123,1×52×15,3	
2.0 TDCi	03/13 →	103	140	ATE	Ø Disc 300	[-]	**PF0604**	155,2×62,3×18		ATE		[-]	**PF0796**	123,1×52×15,3	
2.0 TDCi	03/13 →	103	140	ATE	4x4	[-]	**PF0743**	180,1×54,4×17,4		ATE		[-]	**PF0796**	123,1×52×15,3	
2.0 TDCi	03/13 →	120	163	ATE	4x4	[-]	**PF0743**	180,1×54,4×17,4		ATE		[-]	**PF0796**	123,1×52×15,3	
2.5 TDCi	09/13 →	125	170							ATE		[-]	**PF0796**	123,1×52×15,3	
Maverick I (UDS,UNS)															
2.4 i	02/93 → 08/96	91	124	LG		[-]	**PF0352**	145×55,6×15,7							
2.7 TD	02/93 → 08/96	74	100	LG		[-]	**PF0352**	145×55,6×15,7							
Maverick II															
2.4 i	09/96 → 04/98	87	118	LG		[-]	**PF0352**	145×55,6×15,7							
2.4 i	09/96 → 04/98	85	116	LG		[-]	**PF0352**	145×55,6×15,7							
2.4i	10/96 → 03/98	91		LG		[-]	**PF0352**	145×55,6×15,7							
2.7 TD	09/96 → 04/98	92	125	LG		[-]	**PF0352**	145×55,6×15,7							
2.7 TD	10/96 → 03/98	92		LG		[-]	**PF0352**	145×55,6×15,7							
Mondeo I															
1.6i	93 → 01			ATE		[-]	**PF0245**	155,2×58,5×18							
1.8 TD - LX - GLX	93 → 01			ATE		[-]	**PF0245**	155,2×58,5×18							
1.8i GLX	93 → 01			ATE		[-]	**PF0245**	155,2×58,5×18							
1.8i LX	93 → 01			ATE		[-]	**PF0245**	155,2×58,5×18							
2.0i GLX	93 → 01			ATE		[-]	**PF0245**	155,2×58,5×18							

		KW	CV													
				SiS	i	W.i.	MAGNETI MARELLI	W×H×Th (mm)	Extra kit [Opt]	SiS	i	W.i.	MAGNETI MARELLI	W×H×Th (mm)	Extra kit [Opt]
FORD															
Mondeo II Berlina (B5Y)															
1.8 16V	11/00 → 08/07	81	110	BSC		[+]	**PF0550**	149×60,4×18,5	OK033	BSC		[-]	**PF0265**	116×50×16,8	OK012
1.8 16V	11/00 → 08/07	81	110	BSC		[-]	**PF0266**	149×60,4×18,5	OK033	BSC		[-]	**PF0265**	116×50×16,8	OK012
1.8 16V	11/00 → 08/07	92	125	BSC		[-]	**PF0266**	149×60,4×18,5	OK033	BSC		[-]	**PF0267**	101,9×50,9×16,3	OK033/ OK040
1.8i TD	01 → 07			BSC		[+]	**PF0550**	149×60,4×18,5	OK033	BSC		[-]	**PF0265**	116×50×16,8	OK012
1.8i TD	01 → 07			BSC		[-]	**PF0266**	149×60,4×18,5	OK033	BSC		[-]	**PF0265**	116×50×16,8	OK012
1.8i TD	03 → 07			BSC		[-]	**PF0266**	149×60,4×18,5	OK033	BSC		[-]	**PF0267**	101,9×50,9×16,3	OK033/ OK040
1.8 SCi	06/03 → 08/07	96	130	BSC		[-]	**PF0266**	149×60,4×18,5	OK033	BSC		[-]	**PF0265**	116×50×16,8	OK012
1.8 SCi	06/03 → 08/07	96	130	BSC		[-]	**PF0266**	149×60,4×18,5	OK033	BSC		[-]	**PF0267**	101,9×50,9×16,3	OK033/ OK040
2.0 16V	11/00 → 08/07	107	146	BSC		[+]	**PF0550**	149×60,4×18,5	OK033	BSC		[-]	**PF0265**	116×50×16,8	OK012
2.0 16V	11/00 → 08/07	107	146	BSC		[-]	**PF0266**	149×60,4×18,5	OK033	BSC		[-]	**PF0265**	116×50×16,8	OK012
2.0i 16V	03 → 07			BSC		[-]	**PF0266**	149×60,4×18,5	OK033	BSC		[-]	**PF0267**	101,9×50,9×16,3	OK033/ OK040
2.0 TDCi	10/01 → 08/07	96	130	BSC		[-]	**PF0266**	149×60,4×18,5	OK033	BSC		[-]	**PF0265**	116×50×16,8	OK012
2.0 TDCi	10/01 → 08/07	96	130	BSC		[-]	**PF0266**	149×60,4×18,5	OK033	BSC		[-]	**PF0267**	101,9×50,9×16,3	OK033/ OK040
2.0 TDCi	02/03 → 06/05	92	125	BSC		[-]	**PF0266**	149×60,4×18,5	OK033	BSC		[-]	**PF0265**	116×50×16,8	OK012
2.0 TDCi	02/03 → 06/05	92	125	BSC		[-]	**PF0266**	149×60,4×18,5	OK033	BSC		[-]	**PF0267**	101,9×50,9×16,3	OK033/ OK040
2.0 16V TDDi / TDCi	11/00 → 08/07	85	115	BSC		[-]	**PF0266**	149×60,4×18,5	OK033	BSC		[-]	**PF0265**	116×50×16,8	OK012
2.0 16V TDDi / TDCi	11/00 → 08/07	85	115	BSC		[-]	**PF0266**	149×60,4×18,5	OK033	BSC		[-]	**PF0267**	101,9×50,9×16,3	OK033/ OK040
2.0 16V DI / TDDi / TDCi	11/00 → 08/07	66	90	BSC		[-]	**PF0266**	149×60,4×18,5	OK033	BSC		[-]	**PF0265**	116×50×16,8	OK012
2.0 16V DI / TDDi / TDCi	11/00 → 08/07	66	90	BSC		[-]	**PF0266**	149×60,4×18,5	OK033	BSC		[-]	**PF0267**	101,9×50,9×16,3	OK033/ OK040
2.2 TDCi	09/04 → 08/07	114	155	BSC		[-]	**PF0266**	149×60,4×18,5	OK033	BSC		[-]	**PF0265**	116×50×16,8	OK012
2.2 TDCi	09/04 → 08/07	114	155	BSC		[-]	**PF0266**	149×60,4×18,5	OK033	BSC		[-]	**PF0267**	101,9×50,9×16,3	OK033/ OK040
2.5i 24V	01 → 07			BSC		[+]	**PF0550**	149×60,4×18,5	OK033	BSC		[-]	**PF0265**	116×50×16,8	OK012
2.5i 24V	01 → 07			BSC		[-]	**PF0266**	149×60,4×18,5	OK033	BSC		[-]	**PF0265**	116×50×16,8	OK012
2.5i 24V	03 → 07			BSC		[-]	**PF0266**	149×60,4×18,5	OK033	BSC		[-]	**PF0267**	101,9×50,9×16,3	OK033/ OK040
2.5i 24V	01 → 07			BSC	+AUT	[+]	**PF0550**	149×60,4×18,5	OK033	BSC		[-]	**PF0265**	116×50×16,8	OK012
2.5i 24V	01 → 07			BSC	+AUT	[-]	**PF0266**	149×60,4×18,5	OK033	BSC		[-]	**PF0265**	116×50×16,8	OK012
2.5i 24V	03 → 07			BSC	+AUT	[-]	**PF0266**	149×60,4×18,5	OK033	BSC		[-]	**PF0267**	101,9×50,9×16,3	OK033/ OK040
2.5 V6 24V	11/00 → 08/07	125	170	BSC		[+]	**PF0550**	149×60,4×18,5	OK033	BSC		[-]	**PF0265**	116×50×16,8	OK012
2.5 V6 24V	11/00 → 08/07	125	170	BSC		[-]	**PF0266**	149×60,4×18,5	OK033	BSC		[-]	**PF0265**	116×50×16,8	OK012
2.5 V6 24V	11/00 → 08/07	125	170	BSC		[-]	**PF0266**	149×60,4×18,5	OK033	BSC		[-]	**PF0267**	101,9×50,9×16,3	OK033/ OK040

		KW	CV														
				SiS	i	W.i.	MAGNETI MARELLI	W×H×Th (mm)	Extra kit [Opt]	SiS	i	W.i.	MAGNETI MARELLI	W×H×Th (mm)	Extra kit [Opt]
FORD															
Mondeo II Berlina (B5Y)															
3.0 V6 24V	09/04 → 08/07	150	204	BSC		[-]	**PF0266**	149×60,4×18,5	OK033	BSC		[-]	**PF0265**	116×50×16,8	OK012
3.0 V6 24V	09/04 → 08/07	150	204	BSC		[-]	**PF0266**	149×60,4×18,5	OK033	BSC		[-]	**PF0267**	101,9×50,9×16,3	OK033/ OK040
ST220	04/02 → 08/07	166	226	BSC		[-]	**PF0266**	149×60,4×18,5	OK033	BSC		[-]	**PF0265**	116×50×16,8	OK012
Mondeo II 3 Volumi (B5Y)															
1.8 16V	11/00 → 08/07	81	110	BSC		[-]	**PF0266**	149×60,4×18,5	OK033	BSC		[-]	**PF0265**	116×50×16,8	OK012
1.8 16V	11/00 → 08/07	92	125	BSC		[-]	**PF0266**	149×60,4×18,5	OK033	BSC		[-]	**PF0265**	116×50×16,8	OK012
1.8 SCi	06/03 → 08/07	96	130	BSC		[-]	**PF0266**	149×60,4×18,5	OK033	BSC		[-]	**PF0265**	116×50×16,8	OK012
2.0 16V	11/00 → 08/07	107	146	BSC		[-]	**PF0266**	149×60,4×18,5	OK033	BSC		[-]	**PF0265**	116×50×16,8	OK012
2.0 16V DI / TDDi / TDCi	11/00 → 08/07	66	90	BSC		[-]	**PF0266**	149×60,4×18,5	OK033	BSC		[-]	**PF0265**	116×50×16,8	OK012
2.0 16V TDDi / TDCi	11/00 → 08/07	85	115	BSC		[-]	**PF0266**	149×60,4×18,5	OK033	BSC		[-]	**PF0265**	116×50×16,8	OK012
2.0 TDCi	10/01 → 08/07	96	130	BSC		[-]	**PF0266**	149×60,4×18,5	OK033	BSC		[-]	**PF0265**	116×50×16,8	OK012
2.0 TDCi	02/03 → 06/05	92	125	BSC		[-]	**PF0266**	149×60,4×18,5	OK033	BSC		[-]	**PF0265**	116×50×16,8	OK012
2.2 TDCi	09/04 → 08/07	114	155	BSC		[-]	**PF0266**	149×60,4×18,5	OK033	BSC		[-]	**PF0265**	116×50×16,8	OK012
2.5 V6 24V	11/00 → 08/07	125	170	BSC		[-]	**PF0266**	149×60,4×18,5	OK033	BSC		[-]	**PF0265**	116×50×16,8	OK012
3.0 V6 24V	09/04 → 08/07	150	204	BSC		[-]	**PF0266**	149×60,4×18,5	OK033	BSC		[-]	**PF0265**	116×50×16,8	OK012
ST220	04/02 → 08/07	166	226	BSC		[-]	**PF0266**	149×60,4×18,5	OK033	BSC		[-]	**PF0265**	116×50×16,8	OK012
Mondeo II SW (B5Y)															
1.8 16V	11/00 → 08/07	81	110	BSC		[-]	**PF0266**	149×60,4×18,5	OK033	BSC		[-]	**PF0265**	116×50×16,8	OK012
1.8 16V	11/00 → 08/07	92	125	BSC		[-]	**PF0266**	149×60,4×18,5	OK033	BSC		[-]	**PF0265**	116×50×16,8	OK012
1.8 SCi	06/03 → 08/07	96	130	BSC		[-]	**PF0266**	149×60,4×18,5	OK033	BSC		[-]	**PF0265**	116×50×16,8	OK012
2.0 16V	11/00 → 08/07	107	146	BSC		[-]	**PF0266**	149×60,4×18,5	OK033	BSC		[-]	**PF0265**	116×50×16,8	OK012
2.0 16V DI / TDDi / TDCi	11/00 → 08/07	66	90	BSC		[-]	**PF0266**	149×60,4×18,5	OK033	BSC		[-]	**PF0265**	116×50×16,8	OK012
2.0 16V TDDi / TDCi	11/00 → 08/07	85	115	BSC		[-]	**PF0266**	149×60,4×18,5	OK033	BSC		[-]	**PF0265**	116×50×16,8	OK012
2.0 TDCi	10/01 → 08/07	96	130	BSC		[-]	**PF0266**	149×60,4×18,5	OK033	BSC		[-]	**PF0265**	116×50×16,8	OK012
2.2 TDCi	09/04 → 08/07	110	150	BSC		[-]	**PF0266**	149×60,4×18,5	OK033	BSC		[-]	**PF0265**	116×50×16,8	OK012
2.2 TDCi	09/04 → 08/07	114	155	BSC		[-]	**PF0266**	149×60,4×18,5	OK033	BSC		[-]	**PF0265**	116×50×16,8	OK012
2.5 V6 24V	11/00 → 08/07	125	170	BSC		[-]	**PF0266**	149×60,4×18,5	OK033	BSC		[-]	**PF0265**	116×50×16,8	OK012
3.0 V6 24V	09/04 → 08/07	150	204	BSC		[-]	**PF0266**	149×60,4×18,5	OK033	BSC		[-]	**PF0265**	116×50×16,8	OK012
ST220	04/02 → 08/07	166	226	BSC		[-]	**PF0266**	149×60,4×18,5	OK033	BSC		[-]	**PF0265**	116×50×16,8	OK012
Mondeo III															
1.6 EcoBoost	02/11 →	118	160	ATE		[-]	**PF0263**	155,2×66,6×19,2		LG		[-]	**PF0257**	95,2×43,2×15,8	OK030/ OK082
1.6 TDCi	02/11 →	85	115	ATE		[-]	**PF0263**	155,2×66,6×19,2		LG		[-]	**PF0257**	95,2×43,2×15,8	OK030/ OK082
1.6 Ti	07/10 →	88	120	ATE		[-]	**PF0263**	155,2×66,6×19,2		LG		[-]	**PF0257**	95,2×43,2×15,8	OK030/ OK082
1.6 Ti	03/07 →	81	110	ATE		[-]	**PF0263**	155,2×66,6×19,2		LG		[-]	**PF0257**	95,2×43,2×15,8	OK030/ OK082

MAGNETI MARELLI

		KW	CV												
				SiS	i	W.i.	MAGNETI MARELLI	W×H×Th (mm)	Extra kit [Opt]	SiS	i	W.i.	MAGNETI MARELLI	W×H×Th (mm)	Extra kit [Opt]
FORD															
Mondeo III															
1.6 Ti	03/07→	92	125	ATE		[-]	**PF0263**	155,2×66,6×19,2		LG		[-]	**PF0257**	95,2×43,2×15,8	OK030/ OK082
1.8 TDCi	03/07→	74	100	ATE		[-]	**PF0263**	155,2×66,6×19,2		LG		[-]	**PF0257**	95,2×43,2×15,8	OK030/ OK082
1.8 TDCi	06/07→	92	125	ATE		[-]	**PF0263**	155,2×66,6×19,2		LG		[-]	**PF0257**	95,2×43,2×15,8	OK030/ OK082
2.0	03/07→	107	145	ATE		[-]	**PF0263**	155,2×66,6×19,2		LG		[-]	**PF0257**	95,2×43,2×15,8	OK030/ OK082
2.0 EcoBoost	07/10→	176	240	ATE		[-]	**PF0263**	155,2×66,6×19,2		LG		[-]	**PF0257**	95,2×43,2×15,8	OK030/ OK082
2.0 Flexifuel	03/07→	107	145	ATE		[-]	**PF0263**	155,2×66,6×19,2		LG		[-]	**PF0257**	95,2×43,2×15,8	OK030/ OK082
2.0 LPG	07/09→	107	145	ATE		[-]	**PF0263**	155,2×66,6×19,2		LG		[-]	**PF0257**	95,2×43,2×15,8	OK030/ OK082
2.0 SCTi	03/10→	149	203	ATE		[-]	**PF0263**	155,2×66,6×19,2		LG		[-]	**PF0257**	95,2×43,2×15,8	OK030/ OK082
2.0 TDCi	03/07→	100	136	ATE		[-]	**PF0263**	155,2×66,6×19,2		LG		[-]	**PF0257**	95,2×43,2×15,8	OK030/ OK082
2.0 TDCi	03/07→	96	130	ATE		[-]	**PF0263**	155,2×66,6×19,2		LG		[-]	**PF0257**	95,2×43,2×15,8	OK030/ OK082
2.0 TDCi	03/07→	103	140	ATE		[-]	**PF0263**	155,2×66,6×19,2		LG		[-]	**PF0257**	95,2×43,2×15,8	OK030/ OK082
2.0 TDCi	11/07→	85	115	ATE		[-]	**PF0263**	155,2×66,6×19,2		LG		[-]	**PF0257**	95,2×43,2×15,8	OK030/ OK082
2.0 TDCi	03/10→	120	163	ATE		[-]	**PF0263**	155,2×66,6×19,2		LG		[-]	**PF0257**	95,2×43,2×15,8	OK030/ OK082
2.2 TDCi	07/10→	147	200	ATE		[-]	**PF0263**	155,2×66,6×19,2		LG		[-]	**PF0257**	95,2×43,2×15,8	OK030/ OK082
2.2 TDCi	03/08→	129	175	ATE		[-]	**PF0263**	155,2×66,6×19,2		LG		[-]	**PF0257**	95,2×43,2×15,8	OK030/ OK082
2.3	07/07→	118	160	ATE		[-]	**PF0263**	155,2×66,6×19,2		LG		[-]	**PF0257**	95,2×43,2×15,8	OK030/ OK082
2.5	03/07→	162	220	ATE		[-]	**PF0263**	155,2×66,6×19,2		LG		[-]	**PF0257**	95,2×43,2×15,8	OK030/ OK082
Mondeo III 3 Volumi															
1.6 Ti	03/07→	92	125	ATE		[-]	**PF0263**	155,2×66,6×19,2		LG		[-]	**PF0257**	95,2×43,2×15,8	OK030/ OK082
1.6 Ti	03/07→	81	110	ATE		[-]	**PF0263**	155,2×66,6×19,2		LG		[-]	**PF0257**	95,2×43,2×15,8	OK030/ OK082
1.8 TDCi	06/07→	92	125	ATE		[-]	**PF0263**	155,2×66,6×19,2		LG		[-]	**PF0257**	95,2×43,2×15,8	OK030/ OK082
1.8 TDCi	03/07→	74	100	ATE		[-]	**PF0263**	155,2×66,6×19,2		LG		[-]	**PF0257**	95,2×43,2×15,8	OK030/ OK082

		KW	CV	SiS	i	W.i.	MAGNETI MARELLI	W×H×Th (mm)	Extra kit [Opt]	SiS	i	W.i.	MAGNETI MARELLI	W×H×Th (mm)	Extra kit [Opt]
FORD															
Mondeo III 3 Volumi															
2.0	03/07→	107	145	ATE		[-]	**PF0263**	155,2×66,6×19,2		LG		[-]	**PF0257**	95,2×43,2×15,8	OK030/ OK082
2.0 Flexifuel	03/07→	107	145	ATE		[-]	**PF0263**	155,2×66,6×19,2		LG		[-]	**PF0257**	95,2×43,2×15,8	OK030/ OK082
2.0 LPG	07/09→	107	145	ATE		[-]	**PF0263**	155,2×66,6×19,2		LG		[-]	**PF0257**	95,2×43,2×15,8	OK030/ OK082
2.0 TDCi	03/07→	96	130	ATE		[-]	**PF0263**	155,2×66,6×19,2		LG		[-]	**PF0257**	95,2×43,2×15,8	OK030/ OK082
2.0 TDCi	03/07→	103	140	ATE		[-]	**PF0263**	155,2×66,6×19,2		LG		[-]	**PF0257**	95,2×43,2×15,8	OK030/ OK082
2.0 TDCi	11/07→	85	115	ATE		[-]	**PF0263**	155,2×66,6×19,2		LG		[-]	**PF0257**	95,2×43,2×15,8	OK030/ OK082
2.2 TDCi	03/08→	129	175	ATE		[-]	**PF0263**	155,2×66,6×19,2		LG		[-]	**PF0257**	95,2×43,2×15,8	OK030/ OK082
2.3	07/07→	118	160	ATE		[-]	**PF0263**	155,2×66,6×19,2		LG		[-]	**PF0257**	95,2×43,2×15,8	OK030/ OK082
2.5	03/07→	162	220	ATE		[-]	**PF0263**	155,2×66,6×19,2		LG		[-]	**PF0257**	95,2×43,2×15,8	OK030/ OK082
Mondeo III SW															
1.6 EcoBoost	02/11→	118	160	ATE		[-]	**PF0263**	155,2×66,6×19,2		LG		[-]	**PF0257**	95,2×43,2×15,8	OK030/ OK082
1.6 TDCi	02/11→	85	115	ATE		[-]	**PF0263**	155,2×66,6×19,2		LG		[-]	**PF0257**	95,2×43,2×15,8	OK030/ OK082
1.6 Ti	07/10→	88	120	ATE		[-]	**PF0263**	155,2×66,6×19,2		LG		[-]	**PF0257**	95,2×43,2×15,8	OK030/ OK082
1.6 Ti	03/07→	81	110	ATE		[-]	**PF0263**	155,2×66,6×19,2		LG		[-]	**PF0257**	95,2×43,2×15,8	OK030/ OK082
1.6 Ti	03/07→	92	125	ATE		[-]	**PF0263**	155,2×66,6×19,2		LG		[-]	**PF0257**	95,2×43,2×15,8	OK030/ OK082
1.8 TDCi	03/07→	74	100	ATE		[-]	**PF0263**	155,2×66,6×19,2		LG		[-]	**PF0257**	95,2×43,2×15,8	OK030/ OK082
1.8 TDCi	06/07→	92	125	ATE		[-]	**PF0263**	155,2×66,6×19,2		LG		[-]	**PF0257**	95,2×43,2×15,8	OK030/ OK082
2.0	03/07→	107	145	ATE		[-]	**PF0263**	155,2×66,6×19,2		LG		[-]	**PF0257**	95,2×43,2×15,8	OK030/ OK082
2.0 EcoBoost	07/10→	176	240	ATE		[-]	**PF0263**	155,2×66,6×19,2		LG		[-]	**PF0257**	95,2×43,2×15,8	OK030/ OK082
2.0 Flexifuel	03/07→	107	145	ATE		[-]	**PF0263**	155,2×66,6×19,2		LG		[-]	**PF0257**	95,2×43,2×15,8	OK030/ OK082
2.0 LPG	07/09→	107	145	ATE		[-]	**PF0263**	155,2×66,6×19,2		LG		[-]	**PF0257**	95,2×43,2×15,8	OK030/ OK082
2.0 SCTi	03/10→	149	203	ATE		[-]	**PF0263**	155,2×66,6×19,2		LG		[-]	**PF0257**	95,2×43,2×15,8	OK030/ OK082

		KW	CV	SiS	i	W.i.	MAGNETI MARELLI	W×H×Th (mm)	Extra kit [Opt]	SiS	i	W.i.	MAGNETI MARELLI	W×H×Th (mm)	Extra kit [Opt]
FORD															
Mondeo III SW															
2.0 TDCi	03/07 →	100	136	ATE		[-]	**PF0263**	155,2×66,6×19,2		LG		[-]	**PF0257**	95,2×43,2×15,8	OK030/ OK082
2.0 TDCi	03/07 →	96	130	ATE		[-]	**PF0263**	155,2×66,6×19,2		LG		[-]	**PF0257**	95,2×43,2×15,8	OK030/ OK082
2.0 TDCi	03/07 →	103	140	ATE		[-]	**PF0263**	155,2×66,6×19,2		LG		[-]	**PF0257**	95,2×43,2×15,8	OK030/ OK082
2.0 TDCi	11/07 →	85	115	ATE		[-]	**PF0263**	155,2×66,6×19,2		LG		[-]	**PF0257**	95,2×43,2×15,8	OK030/ OK082
2.0 TDCi	03/10 →	120	163	ATE		[-]	**PF0263**	155,2×66,6×19,2		LG		[-]	**PF0257**	95,2×43,2×15,8	OK030/ OK082
2.2 TDCi	07/10 →	147	200	ATE		[-]	**PF0263**	155,2×66,6×19,2		LG		[-]	**PF0257**	95,2×43,2×15,8	OK030/ OK082
2.2 TDCi	03/08 →	129	175	ATE		[-]	**PF0263**	155,2×66,6×19,2		LG		[-]	**PF0257**	95,2×43,2×15,8	OK030/ OK082
2.3	07/07 →	118	160	ATE		[-]	**PF0263**	155,2×66,6×19,2		LG		[-]	**PF0257**	95,2×43,2×15,8	OK030/ OK082
2.5	03/07 →	162	220	ATE		[-]	**PF0263**	155,2×66,6×19,2		LG		[-]	**PF0257**	95,2×43,2×15,8	OK030/ OK082
Orion II															
1.4 I CL - CLX - CTX	90 →			BD		[-]	**PF0246**	131×57,5×18	OK030						
1.4 GL	90 →			BD	+AUT	[-]	**PF0246**	131×57,5×18	OK030						
1.6 CLX	91 →			BD		[-]	**PF0246**	131×57,5×18	OK030						
1.6i CLX	91 →			BD		[-]	**PF0246**	131×57,5×18	OK030						
1.6 Ghia SI	91 →			BD		[-]	**PF0246**	131×57,5×18	OK030						
1.6 CTX	91 →			BD		[-]	**PF0246**	131×57,5×18	OK030						
1.8 D	91 →			BD		[-]	**PF0246**	131×57,5×18	OK030						
1.8 XLD	91 →			BD		[-]	**PF0246**	131×57,5×18	OK030						
1.8 TD	91 →			BD		[-]	**PF0246**	131×57,5×18	OK030						
Puma (EC)															
1.4i 16V	98 → 00			ATE		[-]	**PF0248**	151,3×46,4×18							
1.4 16V	11/97 → 10/00	66	90	ATE	+ABS	[-]	**PF0252**	150,3×58×18,6							
1.6 16V	08/00 →	76	103	ATE	+ABS	[-]	**PF0252**	150,3×58×18,6							
1.7i 16V	98 → 00			ATE		[-]	**PF0248**	151,3×46,4×18							
1.7 16V	03/97 → 12/01	92	125	ATE	+ABS	[-]	**PF0252**	150,3×58×18,6							
Ranger II (TU)															
2.3	10/05 → 12	105	143	ST		[+]	**PF0439**	145,1×58,4×14	OK093						
2.5 TDdi	05/05 → 12	105	143	ST		[+]	**PF0439**	145,1×58,4×14	OK093						
2.5 TDdi 4x4	05/05 → 12	105	143	ST		[+]	**PF0439**	145,1×58,4×14	OK093						
3.0	10/05 → 12	109	148	ST		[+]	**PF0439**	145,1×58,4×14	OK093						
3.0 4x4	10/05 → 12	109	148	ST		[+]	**PF0439**	145,1×58,4×14	OK093						
3.0 TDCi	05/05 → 12	115	156	ST		[+]	**PF0439**	145,1×58,4×14	OK093						
3.0 TDCi 4x4	05/05 → 12	115	156	ST		[+]	**PF0439**	145,1×58,4×14	OK093						
4.0	10/05 → 12	152	207	ST		[+]	**PF0439**	145,1×58,4×14	OK093						

		KW	CV	SiS	i	W.i.	MAGNETI MARELLI	W×H×Th (mm)	Extra kit [Opt]	SiS	i	W.i.	MAGNETI MARELLI	W×H×Th (mm)	Extra kit [Opt]
FORD															
Ranger II (TU)															
4.0 4x4	10/05 → 12	152	207	ST		[+]	**PF0439**	145,1×58,4×14	OK093						
Scorpio															
All types	85 → 92			ATE		[-]	**PF0249**	151,4×52,5×18							
Scorpio II															
2.0i 16V/SW	95 →			ATE		[-]	**PF0245**	155,2×58,5×18							
2.5 TD/SW	95 →			ATE		[-]	**PF0245**	155,2×58,5×18							
S-Max															
1.6 EcoBoost	02/11 →	118	160	ATE		[-]	**PF0263**	155,2×66,6×19,2		LG	+EPB	[-]	**PF0264**	106,3×48,6×16,8	OK030/ OK083
1.6 EcoBoost	02/11 →	118	160	ATE		[-]	**PF0263**	155,2×66,6×19,2		LG	-EPB	[-]	**PF0257**	95,2×43,2×15,8	OK030/ OK082
1.6 TDCi	02/11 →	85	115	ATE		[-]	**PF0263**	155,2×66,6×19,2		LG	+EPB	[-]	**PF0264**	106,3×48,6×16,8	OK030/ OK083
1.6 TDCi	02/11 →	85	115	ATE		[-]	**PF0263**	155,2×66,6×19,2		LG	-EPB	[-]	**PF0257**	95,2×43,2×15,8	OK030/ OK082
1.8 TDCi	05/06 →	92	125	ATE		[-]	**PF0263**	155,2×66,6×19,2		LG	+EPB	[-]	**PF0264**	106,3×48,6×16,8	OK030/ OK083
1.8 TDCi	05/06 →	92	125	ATE		[-]	**PF0263**	155,2×66,6×19,2		LG	-EPB	[-]	**PF0257**	95,2×43,2×15,8	OK030/ OK082
1.8 TDCi	01/07 →	74	100	ATE		[-]	**PF0263**	155,2×66,6×19,2		LG	+EPB	[-]	**PF0264**	106,3×48,6×16,8	OK030/ OK083
1.8 TDCi	01/07 →	74	100	ATE		[-]	**PF0263**	155,2×66,6×19,2		LG	-EPB	[-]	**PF0257**	95,2×43,2×15,8	OK030/ OK082
2.0	05/06 →	107	145	ATE		[-]	**PF0263**	155,2×66,6×19,2		LG	+EPB	[-]	**PF0264**	106,3×48,6×16,8	OK030/ OK083
2.0	05/06 →	107	145	ATE		[-]	**PF0263**	155,2×66,6×19,2		LG	-EPB	[-]	**PF0257**	95,2×43,2×15,8	OK030/ OK082
2.0 EcoBoost	03/10 →	149	203	ATE	17"	[-]	**PF0797**	155,2×74,9×19,8		LG	+EPB	[-]	**PF0264**	106,3×48,6×16,8	OK030/ OK083
2.0 EcoBoost	07/10 →	176	240	ATE		[-]	**PF0263**	155,2×66,6×19,2		LG	+EPB	[-]	**PF0264**	106,3×48,6×16,8	OK030/ OK083
2.0 EcoBoost	07/10 →	176	240	ATE		[-]	**PF0263**	155,2×66,6×19,2		LG	-EPB	[-]	**PF0257**	95,2×43,2×15,8	OK030/ OK082
2.0 EcoBoost	07/10 →	176	240	ATE	17"	[-]	**PF0797**	155,2×74,9×19,8		LG	-EPB	[-]	**PF0257**	95,2×43,2×15,8	OK030/ OK082
2.0 Flexifuel	05/06 →	107	145	ATE		[-]	**PF0263**	155,2×66,6×19,2		LG	+EPB	[-]	**PF0264**	106,3×48,6×16,8	OK030/ OK083
2.0 Flexifuel	05/06 →	107	145	ATE		[-]	**PF0263**	155,2×66,6×19,2		LG	-EPB	[-]	**PF0257**	95,2×43,2×15,8	OK030/ OK082
2.0 SCTi	03/10 →	149	203	ATE		[-]	**PF0263**	155,2×66,6×19,2		LG	+EPB	[-]	**PF0264**	106,3×48,6×16,8	OK030/ OK083
2.0 SCTi	03/10 →	149	203	ATE		[-]	**PF0263**	155,2×66,6×19,2		LG	-EPB	[-]	**PF0257**	95,2×43,2×15,8	OK030/ OK082

MAGNETI MARELLI

		KW	CV													
				SiS	i	W.i.	MAGNETI MARELLI	W×H×Th (mm)	Extra kit [Opt]	SiS	i	W.i.	MAGNETI MARELLI	W×H×Th (mm)	Extra kit [Opt]
FORD															
S-Max															
2.0 TDCi	05/06 →	100	136	ATE		[-]	**PF0263**	155,2×66,6×19,2		LG	+EPB	[-]	**PF0264**	106,3×48,6×16,8	OK030/ OK083
2.0 TDCi	05/06 →	100	136	ATE		[-]	**PF0263**	155,2×66,6×19,2		LG	-EPB	[-]	**PF0257**	95,2×43,2×15,8	OK030/ OK082
2.0 TDCi	05/06 →	96	130	ATE		[-]	**PF0263**	155,2×66,6×19,2		LG	+EPB	[-]	**PF0264**	106,3×48,6×16,8	OK030/ OK083
2.0 TDCi	05/06 →	96	130	ATE		[-]	**PF0263**	155,2×66,6×19,2		LG	-EPB	[-]	**PF0257**	95,2×43,2×15,8	OK030/ OK082
2.0 TDCi	05/06 →	103	140	ATE		[-]	**PF0263**	155,2×66,6×19,2		LG	+EPB	[-]	**PF0264**	106,3×48,6×16,8	OK030/ OK083
2.0 TDCi	05/06 →	103	140	ATE		[-]	**PF0263**	155,2×66,6×19,2		LG	-EPB	[-]	**PF0257**	95,2×43,2×15,8	OK030/ OK082
2.0 TDCi	11/07 →	85	115	ATE		[-]	**PF0263**	155,2×66,6×19,2		LG	+EPB	[-]	**PF0264**	106,3×48,6×16,8	OK030/ OK083
2.0 TDCi	11/07 →	85	115	ATE		[-]	**PF0263**	155,2×66,6×19,2		LG	-EPB	[-]	**PF0257**	95,2×43,2×15,8	OK030/ OK082
2.0 TDCi	11/07 →	85	115	ATE	17"	[-]	**PF0797**	155,2×74,9×19,8		LG	+EPB	[-]	**PF0264**	106,3×48,6×16,8	OK030/ OK083
2.0 TDCi	11/07 →	85	115	ATE	17"	[-]	**PF0797**	155,2×74,9×19,8		LG	-EPB	[-]	**PF0257**	95,2×43,2×15,8	OK030/ OK082
2.0 TDCi	03/10 →	120	163	ATE		[-]	**PF0263**	155,2×66,6×19,2		LG	+EPB	[-]	**PF0264**	106,3×48,6×16,8	OK030/ OK083
2.0 TDCi	03/10 →	120	163	ATE		[-]	**PF0263**	155,2×66,6×19,2		LG	-EPB	[-]	**PF0257**	95,2×43,2×15,8	OK030/ OK082
2.2 TDCi	07/10 →	147	200	ATE		[-]	**PF0263**	155,2×66,6×19,2		LG	+EPB	[-]	**PF0264**	106,3×48,6×16,8	OK030/ OK083
2.2 TDCi	07/10 →	147	200	ATE		[-]	**PF0263**	155,2×66,6×19,2		LG	-EPB	[-]	**PF0257**	95,2×43,2×15,8	OK030/ OK082
2.2 TDCi	03/08 →	129	175	ATE		[-]	**PF0263**	155,2×66,6×19,2		LG	+EPB	[-]	**PF0264**	106,3×48,6×16,8	OK030/ OK083
2.2 TDCi	03/08 →	129	175	ATE		[-]	**PF0263**	155,2×66,6×19,2		LG	-EPB	[-]	**PF0257**	95,2×43,2×15,8	OK030/ OK082
2.2 TDCi	03/08 →	129	175	ATE	17"	[-]	**PF0797**	155,2×74,9×19,8		LG	+EPB	[-]	**PF0264**	106,3×48,6×16,8	OK030/ OK083
2.2 TDCi	03/08 →	129	175	ATE	17"	[-]	**PF0797**	155,2×74,9×19,8		LG	-EPB	[-]	**PF0257**	95,2×43,2×15,8	OK030/ OK082
2.3	07/07 →	118	160	ATE		[-]	**PF0263**	155,2×66,6×19,2		LG	+EPB	[-]	**PF0264**	106,3×48,6×16,8	OK030/ OK083
2.3	07/07 →	118	160	ATE		[-]	**PF0263**	155,2×66,6×19,2		LG	-EPB	[-]	**PF0257**	95,2×43,2×15,8	OK030/ OK082
2.5 ST	05/06 →	162	220	ATE		[-]	**PF0263**	155,2×66,6×19,2		LG	+EPB	[-]	**PF0264**	106,3×48,6×16,8	OK030/ OK083
2.5 ST	05/06 →	162	220	ATE		[-]	**PF0263**	155,2×66,6×19,2		LG	-EPB	[-]	**PF0257**	95,2×43,2×15,8	OK030/ OK082

		KW	CV	SiS	i	W.i.	MAGNETI MARELLI	W×H×Th (mm)	Extra kit [Opt]	SiS	i	W.i.	MAGNETI MARELLI	W×H×Th (mm)	Extra kit [Opt]
FORD															
S-Max															
2.5 ST	05/06 →	162	220	ATE	17"	[-]	**PF0797**	155,2×74,9×19,8		LG	+EPB	[-]	**PF0264**	106,3×48,6×16,8	OK030/ OK083
2.5 ST	05/06 →	162	220	ATE	17"	[-]	**PF0797**	155,2×74,9×19,8		LG	-EPB	[-]	**PF0257**	95,2×43,2×15,8	OK030/ OK082
StreetKa															
1.6	05/03 → 07/05	70	95	ATE	+ABS	[-]	**PF0252**	150,3×58×18,6							
Transit III															
FT 80 - FT 100 - FT 120	91 → 00			BD	+KIT/14"	[-]	**PF0268**	138,8×64×17,9							
FT 80 - FT 100 - FT 120	91 → 00			BD	14"	[-]	**PF0269**	138,8×64×17,9							
FT 150 - FT 190	91 → 00			BD	+KIT/15"	[-]	**PF0270**	138,8×71,7×18,1							
Transit Tourneo (→ 01)															
2.4 D	08/94 → 06/00	55	74	BD	+KIT/14"	[-]	**PF0268**	138,8×64×17,9							
2.4 D	08/94 → 06/00	55	74	BD	+KIT	[-]	**PF0270**	138,8×71,7×18,1							
2.4 D	10/83 → 09/85	50	68	BD	+KIT/14"	[-]	**PF0268**	138,8×64×17,9							
2.4 D	10/83 → 09/85	50	68	BD	+KIT	[-]	**PF0270**	138,8×71,7×18,1							
2.5 DI	11/94 → 12/00	51	69	BD	+KIT/14"	[-]	**PF0268**	138,8×64×17,9							
2.5 DI	11/94 → 12/00	51	69	BD	+KIT	[-]	**PF0270**	138,8×71,7×18,1							
2.5 DI	11/94 → 12/00	56	76	BD	+KIT/14"	[-]	**PF0268**	138,8×64×17,9							
2.5 DI	11/94 → 12/00	56	76	BD	+KIT	[-]	**PF0270**	138,8×71,7×18,1							
2.5 TD	11/94 → 12/00	63	85	BD	+KIT/14"	[-]	**PF0268**	138,8×64×17,9							
2.5 TD	11/94 → 12/00	63	85	BD	+KIT	[-]	**PF0270**	138,8×71,7×18,1							
2.5 TD	04/98 → 12/00	74	100	BD	+KIT/14"	[-]	**PF0268**	138,8×64×17,9							
2.5 TD	04/98 → 12/00	74	100	BD	+KIT	[-]	**PF0270**	138,8×71,7×18,1							
Transit III Van															
80	91 → 00			BD	+KIT/14"	[-]	**PF0268**	138,8×64×17,9							
80	91 → 00			BD	14"	[-]	**PF0269**	138,8×64×17,9							
100	91 → 00			BD	+KIT/14"	[-]	**PF0268**	138,8×64×17,9							
100	91 → 00			BD	14"	[-]	**PF0269**	138,8×64×17,9							
120	91 → 00			BD	+KIT/14"	[-]	**PF0268**	138,8×64×17,9							
120	91 → 00			BD	14"	[-]	**PF0269**	138,8×64×17,9							
130	91 → 00			BD	+KIT	[-]	**PF0270**	138,8×71,7×18,1							
150	91 → 00			BD	+KIT	[-]	**PF0270**	138,8×71,7×18,1							
190	91 → 00			BD	+KIT	[-]	**PF0270**	138,8×71,7×18,1							
Transit Connect (P65,P70,P80)															
1.8 16V	06/02 →	85	116	ATE		[-]	**PF0256**	156,3×62×17,6		ATE		[-]	**PF0431**	123,1×52×16,4	
1.8 Di	06/02 →	55	75	ATE		[-]	**PF0256**	156,3×62×17,6		ATE		[-]	**PF0431**	123,1×52×16,4	
1.8 TDCi	06/02 →	66	90	ATE		[-]	**PF0256**	156,3×62×17,6		ATE		[-]	**PF0431**	123,1×52×16,4	
1.8 TDCi	08/06 →	81	110	ATE		[-]	**PF0256**	156,3×62×17,6		ATE		[-]	**PF0431**	123,1×52×16,4	

		KW	CV	SiS	i	W.i.	MAGNETI MARELLI	W×H×Th (mm)	Extra kit [Opt]	SiS	i	W.i.	MAGNETI MARELLI	W×H×Th (mm)	Extra kit [Opt]
FORD															
Transit IV (FWD)															
2.0	09/00 → 03/06	84	114	BSC	(FWD)	[+]	**PF0271**	168,5×63,8×18,4	OK012						
2.3	03/01 → 03/06	107	145	BSC	(FWD)	[+]	**PF0271**	168,5×63,8×18,4	OK012						
2.3	03/01 → 03/06	105	143	BSC	(FWD)	[+]	**PF0271**	168,5×63,8×18,4	OK012						
2.4 DI	01/00 → 05/06	66	90	BSC	(FWD)	[+]	**PF0271**	168,5×63,8×18,4	OK012						
2.0	09/00 → 03/06	84	114	BSC	(FWD)	[+]	**PF0271**	168,5×63,8×18,4	OK012						
2.3	08/00 → 03/06	107	145	BSC	(FWD)	[+]	**PF0271**	168,5×63,8×18,4	OK012						
2.4 DI	01/00 → 05/06	66	90	BSC	(FWD)	[+]	**PF0271**	168,5×63,8×18,4	OK012						
Transit IV (RWD)															
2.0	09/00 → 03/06	84	114	BSC	(RWD)	[+]	**PF0556**	168,8×65,1×18,4	OK012						
2.3 16V	08/00 → 05/06	107	146	BSC	(RWD)	[+]	**PF0556**	168,8×65,1×18,4	OK012						
2.4 DI	01/00 → 05/06	88	120	BSC	(RWD)	[+]	**PF0556**	168,8×65,1×18,4	OK012						
2.4 DI	01/00 → 05/06	55	75	BSC	(RWD)	[+]	**PF0556**	168,8×65,1×18,4	OK012						
Transit V															
260	07/06 →			BSC		[+]	**PF0648**	164,9×65,4×18,9	OK072/ OK038	BSC		[+]	**PF0273**	122,9×63,6×17,3	OK012/ OK040
260	07/06 →			BSC	(3500Kg)	[+]	**PF0648**	164,9×65,4×18,9	OK072/ OK038	BR		[+]	**PF0474**	109,5×63,8×20	
280	07/06 →			BSC		[+]	**PF0648**	164,9×65,4×18,9	OK072/ OK038	BSC		[+]	**PF0273**	122,9×63,6×17,3	OK012/ OK040
280	07/06 →			BSC	(3500Kg)	[+]	**PF0648**	164,9×65,4×18,9	OK072/ OK038	BR		[+]	**PF0474**	109,5×63,8×20	
300	07/06 →			BSC		[+]	**PF0648**	164,9×65,4×18,9	OK072/ OK038	BSC		[+]	**PF0273**	122,9×63,6×17,3	OK012/ OK040
300	07/06 →			BSC	(3500Kg)	[+]	**PF0648**	164,9×65,4×18,9	OK072/ OK038	BR		[+]	**PF0474**	109,5×63,8×20	
330	07/06 →			BSC		[+]	**PF0272**	164,9×66,8×18,7	OK072/ OK038	BSC		[+]	**PF0273**	122,9×63,6×17,3	OK012/ OK040
330	07/06 →			BSC	(3500Kg)	[+]	**PF0272**	164,9×66,8×18,7	OK072/ OK038	BR		[+]	**PF0474**	109,5×63,8×20	
350	07/06 →			BSC		[+]	**PF0272**	164,9×66,8×18,7	OK072/ OK038	BSC		[+]	**PF0273**	122,9×63,6×17,3	OK012/ OK040
350	07/06 →			BSC	(3500Kg)	[+]	**PF0272**	164,9×66,8×18,7	OK072/ OK038	BR		[+]	**PF0474**	109,5×63,8×20	
Transit V Tourneo (06 →)															
2.2 TDCi	07/06 →	81	110	BSC	(260-280-300)	[+]	**PF0648**	164,9×65,4×18,9	OK072/ OK038	BSC		[+]	**PF0273**	122,9×63,6×17,3	OK012/ OK040
2.2 TDCi	07/06 →	81	110	BSC	(330-350)	[+]	**PF0272**	164,9×66,8×18,7	OK072/ OK038	BSC		[+]	**PF0273**	122,9×63,6×17,3	OK012/ OK040
2.2 TDCi	07/06 →	96	131	BSC	(260-280-300)	[+]	**PF0648**	164,9×65,4×18,9	OK072/ OK038	BSC		[+]	**PF0273**	122,9×63,6×17,3	OK012/ OK040
2.2 TDCi	07/06 →	96	131	BSC	(330-350)	[+]	**PF0272**	164,9×66,8×18,7	OK072/ OK038	BSC		[+]	**PF0273**	122,9×63,6×17,3	OK012/ OK040
2.2 TDCi	10/07 →	103	140	BSC	(260-280-300)	[+]	**PF0648**	164,9×65,4×18,9	OK072/ OK038	BSC		[+]	**PF0273**	122,9×63,6×17,3	OK012/ OK040

		KW	CV	SiS	i	W.i.	MAGNETI MARELLI	W×H×Th (mm)	Extra kit [Opt]	SiS	i	W.i.	MAGNETI MARELLI	W×H×Th (mm)	Extra kit [Opt]
FORD															
Transit V Tourneo (06→)															
2.2 TDCi	10/07→	103	140	BSC	(330-350)	[+]	**PF0272**	164,9×66,8×18,7	OK072/ OK038	BSC		[+]	**PF0273**	122,9×63,6×17,3	OK012/ OK040
2.2 TDCi	10/08→	85	115	BSC	(260-280-300)	[+]	**PF0648**	164,9×65,4×18,9	OK072/ OK038	BSC		[+]	**PF0273**	122,9×63,6×17,3	OK012/ OK040
2.2 TDCi	10/08→	85	115	BSC	(330-350)	[+]	**PF0272**	164,9×66,8×18,7	OK072/ OK038	BSC		[+]	**PF0273**	122,9×63,6×17,3	OK012/ OK040
Transit Connect															
1.0 EcoBoost	11/13→	74	100	ATE	Non per elevata portata utile	[-]	**PF0244**	155,2×62,3×18,2		ATE		[-]	**PF0431**	123,1×52×16,4	
1.6 EcoBoost	11/13→	110	150	ATE	Non per elevata portata utile	[-]	**PF0244**	155,2×62,3×18,2		ATE		[-]	**PF0431**	123,1×52×16,4	
1.6 TDCi	09/13→	55	75	ATE	Non per elevata portata utile	[-]	**PF0244**	155,2×62,3×18,2		ATE		[-]	**PF0431**	123,1×52×16,4	
1.6 TDCi	09/13→	70	95	ATE	Non per elevata portata utile	[-]	**PF0244**	155,2×62,3×18,2		ATE		[-]	**PF0431**	123,1×52×16,4	
1.6 TDCi	09/13→	85	115	ATE	Non per elevata portata utile	[-]	**PF0244**	155,2×62,3×18,2		ATE		[-]	**PF0431**	123,1×52×16,4	
Transit Connect SW															
1.6 EcoBoost	11/13→	110	150	ATE	Non per elevata portata utile	[-]	**PF0244**	155,2×62,3×18,2		ATE		[-]	**PF0431**	123,1×52×16,4	
1.6 TDCi	09/13→	55	75	ATE	Non per elevata portata utile	[-]	**PF0244**	155,2×62,3×18,2		ATE		[-]	**PF0431**	123,1×52×16,4	
1.6 TDCi	09/13→	70	95	ATE	Non per elevata portata utile	[-]	**PF0244**	155,2×62,3×18,2		ATE		[-]	**PF0431**	123,1×52×16,4	
1.6 TDCi	09/13→	85	115	ATE	Non per elevata portata utile	[-]	**PF0244**	155,2×62,3×18,2		ATE		[-]	**PF0431**	123,1×52×16,4	
Transit Tourneo															
1.0 EcoBoost	11/13→	74	100	ATE	Non per elevata portata utile	[-]	**PF0244**	155,2×62,3×18,2		ATE		[-]	**PF0431**	123,1×52×16,4	
1.6 EcoBoost	11/13→	110	150	ATE	Non per elevata portata utile	[-]	**PF0244**	155,2×62,3×18,2		ATE		[-]	**PF0431**	123,1×52×16,4	

		KW	CV	SiS	i	W.i.	MAGNETI MARELLI	W×H×Th (mm)	Extra kit [Opt]	SiS	i	W.i.	MAGNETI MARELLI	W×H×Th (mm)	Extra kit [Opt]
FORD															
Transit Tourneo															
1.6 TDCi	09/13→	55	75	ATE	Non per elevata portata utile	[-]	**PF0244**	155,2×62,3×18,2		ATE		[-]	**PF0431**	123,1×52×16,4	
1.6 TDCi	09/13→	70	95	ATE	Non per elevata portata utile	[-]	**PF0244**	155,2×62,3×18,2		ATE		[-]	**PF0431**	123,1×52×16,4	
1.6 TDCi	09/13→	85	115	ATE	Non per elevata portata utile	[-]	**PF0244**	155,2×62,3×18,2		ATE		[-]	**PF0431**	123,1×52×16,4	
Transit Tourneo SW															
1.0 EcoBoost	02/14→	74	101	ATE	Non per elevata portata utile	[-]	**PF0244**	155,2×62,3×18,2		ATE		[-]	**PF0431**	123,1×52×16,4	
1.5 TDCi	02/14→	55	75	ATE	Non per elevata portata utile	[-]	**PF0244**	155,2×62,3×18,2		ATE		[-]	**PF0431**	123,1×52×16,4	
1.6 TDCi	02/14→	70	95	ATE	Non per elevata portata utile	[-]	**PF0244**	155,2×62,3×18,2		ATE		[-]	**PF0431**	123,1×52×16,4	
Transit Custom Kombi															
2.2 TDCi	12→	114	155	BR	-DWR	[+]	**PF0741**	171,7×68,7×17		BR		[o]	**PF0740**	139,9×58,4×17,8	OK033
2.2 TDCi	12→	114	155	BR	-DWR	[o]	**PF0742**	171,7×68,7×17		BR		[o]	**PF0740**	139,9×58,4×17,8	OK033
2.2 TDCi	12→	114	155							BR		[o]	**PF0740**	139,9×58,4×17,8	OK033
2.2 TDCi	12→	74	100	BR	-DWR	[+]	**PF0741**	171,7×68,7×17		BR		[o]	**PF0740**	139,9×58,4×17,8	OK033
2.2 TDCi	12→	74	100	BR	-DWR	[o]	**PF0742**	171,7×68,7×17		BR		[o]	**PF0740**	139,9×58,4×17,8	OK033
2.2 TDCi	12→	74	100							BR		[o]	**PF0740**	139,9×58,4×17,8	OK033
2.2 TDCi	12→	92	125	BR	-DWR	[+]	**PF0741**	171,7×68,7×17		BR		[o]	**PF0740**	139,9×58,4×17,8	OK033
2.2 TDCi	12→	92	125	BR	-DWR	[o]	**PF0742**	171,7×68,7×17		BR		[o]	**PF0740**	139,9×58,4×17,8	OK033
2.2 TDCi	12→	92	125							BR		[o]	**PF0740**	139,9×58,4×17,8	OK033
Transit Custom SW															
2.2 TDCi	12→	114	155	BR	-DWR	[+]	**PF0741**	171,7×68,7×17		BR		[o]	**PF0740**	139,9×58,4×17,8	OK033
2.2 TDCi	12→	114	155	BR	-DWR	[o]	**PF0742**	171,7×68,7×17		BR		[o]	**PF0740**	139,9×58,4×17,8	OK033
2.2 TDCi	12→	114	155							BR		[o]	**PF0740**	139,9×58,4×17,8	OK033
2.2 TDCi	12→	74	100	BR	-DWR	[+]	**PF0741**	171,7×68,7×17		BR		[o]	**PF0740**	139,9×58,4×17,8	OK033
2.2 TDCi	12→	74	100	BR	-DWR	[o]	**PF0742**	171,7×68,7×17		BR		[o]	**PF0740**	139,9×58,4×17,8	OK033
2.2 TDCi	12→	74	100							BR		[o]	**PF0740**	139,9×58,4×17,8	OK033
2.2 TDCi	12→	92	125	BR	-DWR	[+]	**PF0741**	171,7×68,7×17		BR		[o]	**PF0740**	139,9×58,4×17,8	OK033
2.2 TDCi	12→	92	125	BR	-DWR	[o]	**PF0742**	171,7×68,7×17		BR		[o]	**PF0740**	139,9×58,4×17,8	OK033
2.2 TDCi	12→	92	125							BR		[o]	**PF0740**	139,9×58,4×17,8	OK033
Transit Custom Tourneo															
2.2 TDCi	12→	114	155	BR	-DWR	[+]	**PF0741**	171,7×68,7×17		BR		[o]	**PF0740**	139,9×58,4×17,8	OK033
2.2 TDCi	12→	114	155	BR	-DWR	[o]	**PF0742**	171,7×68,7×17		BR		[o]	**PF0740**	139,9×58,4×17,8	OK033
2.2 TDCi	12→	114	155							BR		[o]	**PF0740**	139,9×58,4×17,8	OK033
2.2 TDCi	12→	74	100	BR	-DWR	[+]	**PF0741**	171,7×68,7×17		BR		[o]	**PF0740**	139,9×58,4×17,8	OK033

		KW	CV													
				SiS	i	W.i.	MAGNETI MARELLI	W×H×Th (mm)	Extra kit [Opt]	SiS	i	W.i.	MAGNETI MARELLI	W×H×Th (mm)	Extra kit [Opt]
FORD															
Transit Custom Tourneo															
2.2 TDCi	12→	74	100	BR	-DWR	[o]	**PF0742**	171,7×68,7×17		BR		[o]	**PF0740**	139,9×58,4×17,8	OK033
2.2 TDCi	12→	74	100							BR		[o]	**PF0740**	139,9×58,4×17,8	OK033
2.2 TDCi	12→	92	125	BR	-DWR	[+]	**PF0741**	171,7×68,7×17		BR		[o]	**PF0740**	139,9×58,4×17,8	OK033
2.2 TDCi	12→	92	125	BR	-DWR	[o]	**PF0742**	171,7×68,7×17		BR		[o]	**PF0740**	139,9×58,4×17,8	OK033
2.2 TDCi	12→	92	125							BR		[o]	**PF0740**	139,9×58,4×17,8	OK033
GEO															
Metro															
1.0 T. Xfi	91→			AK		[+]	**PF0491**	107,3×44,6×15							
Prizm															
1.6i 16V	93→			AK		[+]	**PF0406**	133,2×53×17,5							
1.8i 16V Lsi	89→92			AK		[+]	**PF0405**	119,7×47,5×15							
Storm															
1.8i 16V	91→			AK		[+]	**PF0406**	133,2×53×17,5							
1.8i 16V Lsi	89→92			AK		[+]	**PF0405**	119,7×47,5×15							
HOLDEN															
Apollo SW (JM)															
2.2 i	03/93→05/95	93	126	AK		[+]	**PF0405**	119,7×47,5×15							
3.0 i	03/93→05/95	136	185	AK		[+]	**PF0405**	119,7×47,5×15							
2.2 i	01/95→05/97	93	124	AK		[+]	**PF0405**	119,7×47,5×15							
3.0 i	01/95→05/97	136	185	AK		[+]	**PF0405**	119,7×47,5×15							
Apollo 3 Volumi (JM)															
2.2	03/93→01/95	88	120	AK		[+]	**PF0405**	119,7×47,5×15							
2.2 i	03/93→05/95	93	126	AK		[+]	**PF0405**	119,7×47,5×15							
3.0	03/93→08/95	136	185	AK		[+]	**PF0405**	119,7×47,5×15							
3.0 i	03/93→05/95	136	185	AK		[+]	**PF0405**	119,7×47,5×15							
2.2 i	01/95→05/97	93	124	AK		[+]	**PF0405**	119,7×47,5×15							
3.0 i	01/95→05/97	136	185	AK		[+]	**PF0405**	119,7×47,5×15							
Barina															
1.3	93→			DM		[-]	**PF0354**	100×59×15,6							
HONDA															
Accord I / II / III															
2.0i 16V EX	86→89			AK		[+]				AK		[+]	**PF0457**	88,9×35,2×13	
2.0i Aerodeck EX - Luxe	88→89			AK		[+]				AK		[+]	**PF0457**	88,9×35,2×13	
2.0i EX - Luxe - 4WS	89→			AK		[+]				AK		[+]	**PF0457**	88,9×35,2×13	
2.0i SW	90→			AK		[+]				AK		[+]	**PF0457**	88,9×35,2×13	
Accord IV (CB3, CB7)															
1.8	01/90→12/91	77	105	AK		[+]	**PF0274**	148,7×57,7×17,3		AK		[+]	**PF0462**	88,9×47,5×14,7	
2.0 16V	01/90→03/93	66	90	AK	(CB3)	[+]	**PF0274**	148,7×57,7×17,3		AK		[+]	**PF0462**	88,9×47,5×14,7	
2.0 16V	01/90→03/93	66	90							AK		[+]	**PF0462**	88,9×47,5×14,7	

		KW	CV													
				SiS	i	W.i.	MAGNETI MARELLI	W×H×Th (mm)	Extra kit [Opt]	SiS	i	W.i.	MAGNETI MARELLI	W×H×Th (mm)	Extra kit [Opt]
HONDA																
Accord IV (CB3, CB7)																
2.0 16V	01/90 → 03/93	81	110	AK	(CB3)	[+]	PF0274	148,7×57,7×17,3		AK		[+]	PF0462	88,9×47,5×14,7	
2.0i 16V	01/90 → 03/93	98	133							AK		[+]	PF0462	88,9×47,5×14,7	
2.2	10/91 → 10/93	103	140	AK		[+]	PF0274	148,7×57,7×17,3		AK		[+]	PF0462	88,9×47,5×14,7	
2.2i 16V	01/90 → 03/93	110	150	AK	(CB7)	[+]	PF0274	148,7×57,7×17,3		AK		[+]	PF0462	88,9×47,5×14,7	
2.2i 16V Automatik	01/90 → 03/93	108	147	AK	(CB7)	[+]	PF0274	148,7×57,7×17,3		AK		[+]	PF0462	88,9×47,5×14,7	
Accord IV Aerodeck (CB8, CB9)																
2.0i 16V	03/93 → 12/93	98	133	AK	(CC9)	[+]	PF0274	148,7×57,7×17,3		AK		[+]	PF0462	88,9×47,5×14,7	
2.2	05/92 → 12/94	103	140	AK		[+]	PF0274	148,7×57,7×17,3		AK		[+]	PF0462	88,9×47,5×14,7	
2.2i 16V	01/91 → 12/93	108	147	AK	(CB8)	[+]	PF0274	148,7×57,7×17,3		AK		[+]	PF0462	88,9×47,5×14,7	
2.2i 16V	01/91 → 12/93	110	150	AK	(CB8)	[+]	PF0274	148,7×57,7×17,3		AK		[+]	PF0462	88,9×47,5×14,7	
2.0i 16V	01/92 → 09/93	98	133	AK		[+]	PF0274	148,7×57,7×17,3		AK		[+]	PF0462	88,9×47,5×14,7	
Accord V (CC7, CD)																
1.8i 16V	96 → 96									AK		[+]	PF0462	88,9×47,5×14,7	
2.0 i	03/93 → 01/96	85	116	AK		[+]	PF0274	148,7×57,7×17,3		AK		[+]	PF0462	88,9×47,5×14,7	
2.0 i S	03/93 → 01/96	96	131	AK		[+]	PF0274	148,7×57,7×17,3		AK		[+]	PF0462	88,9×47,5×14,7	
2.2 Exi	10/93 → 12/97	103	140	AK	(CD5)	[+]	PF0274	148,7×57,7×17,3		AK		[+]	PF0462	88,9×47,5×14,7	
2.2 Vti	10/93 → 12/97	107	146	AK	(CD5)	[+]	PF0274	148,7×57,7×17,3		AK		[+]	PF0462	88,9×47,5×14,7	
2.3 i SR	03/93 → 01/96	116	158	AK		[+]	PF0274	148,7×57,7×17,3		AK		[+]	PF0462	88,9×47,5×14,7	
Accord V Aerodeck (CE)																
2.0 i LS 16V	09/93 → 02/98	100	136	AK		[+]	PF0274	148,7×57,7×17,3		AK		[+]	PF0462	88,9×47,5×14,7	
2.2 i ES	09/93 → 02/98	110	150	AK		[+]	PF0274	148,7×57,7×17,3							
2.0	09/93 → 12/97	100	136	AK		[+]	PF0274	148,7×57,7×17,3		AK		[+]	PF0462	88,9×47,5×14,7	
2.2 i ES	09/93 → 02/98	110	150	AK		[+]	PF0274	148,7×57,7×17,3		AK		[+]	PF0462	88,9×47,5×14,7	
Accord VI (CE-CF)																
1.8i 16V	96 → 98			AK	(CE7)	[+]	PF0274	148,7×57,7×17,3		AK		[+]	PF0462	88,9×47,5×14,7	
1.9i	02/96 → 10/98	85	116							AK		[+]	PF0462	88,9×47,5×14,7	
2.0i LS	02/96 → 10/98	96	131	AK	(CE8)	[+]	PF0274	148,7×57,7×17,3		AK		[+]	PF0462	88,9×47,5×14,7	
2.0 Tdi	04/96 → 10/98	77	105	AK	(CF1)	[+]	PF0274	148,7×57,7×17,3		AK		[+]	PF0462	88,9×47,5×14,7	
2.2	04/96 → 12/97	103	140	AK		[+]	PF0274	148,7×57,7×17,3		AK		[+]	PF0462	88,9×47,5×14,7	
2.2	06/94 → 06/96	107	146	AK	(CE1)	[+]	PF0274	148,7×57,7×17,3		AK		[+]	PF0462	88,9×47,5×14,7	
2.2i VTEC	02/96 → 10/98	110	150	AK	(CE9)	[+]	PF0274	148,7×57,7×17,3		AK		[+]	PF0462	88,9×47,5×14,7	
Accord VI (CG-CK)																
1.8i	12/99 →			LG	(CG)	[+]	PF0567	131,7×58,5×17,2	OK033						
2.0i	10/98 →			LG	(CG)	[+]	PF0567	131,7×58,5×17,2	OK033						
2.0 T	02/99 →			LG	(CG)	[+]	PF0567	131,7×58,5×17,2	OK033						
2.2i R	99 →			AK	(CG)	[+]	PF0274	148,7×57,7×17,3							
2.3	01/01 →			LG		[+]	PF0567	131,7×58,5×17,2	OK033						
3.0i V6 24V Coupé	98 →			AK	(CG)	[+]	PF0274	148,7×57,7×17,3		AK		[+]	PF0462	88,9×47,5×14,7	
Accord Berlina VII																
2.0	03 →			AK		[+]	PF0691	155,1×64,6×17,2		AK		[+]	PF0461	88,9×47,5×14,7	
2.2 CTDI	03 →			AK		[+]	PF0691	155,1×64,6×17,2		AK		[+]	PF0461	88,9×47,5×14,7	
2.4	03 →			AK		[+]	PF0691	155,1×64,6×17,2		AK		[+]	PF0461	88,9×47,5×14,7	

		KW	CV	SiS	i	W.i.	MAGNETI MARELLI	W×H×Th (mm)	Extra kit [Opt]	SiS	i	W.i.	MAGNETI MARELLI	W×H×Th (mm)	Extra kit [Opt]
HONDA															
Accord SW VII															
2.0	04→			AK		[+]	**PF0691**	155,1×64,6×17,2		AK		[+]	**PF0461**	88,9×47,5×14,7	
2.4	04→			AK		[+]	**PF0691**	155,1×64,6×17,2		AK		[+]	**PF0461**	88,9×47,5×14,7	
Accord Berlina VIII (CU)															
2.0	07/08→			ATE		[+]	**PF0706**	154,8×55,2×17,7		NI		[+]	**PF0703**	93,5×46,8×14,7	
2.0	07/08→			ATE		[+]	**PF0706**	154,8×55,2×17,7		AKE		[+]	**PF0463**	88,9×47,5×14,7	
2.0	11→13			ATE	U.S.A./ Giappone	[+]	**PF0706**	154,8×55,2×17,7		NI	U.S.A./ Giappone	[+]	**PF0704**	93,5×46,8×15,1	
2.0 i	07/08→	110	150							NI		[+]	**PF0703**	93,5×46,8×14,7	
2.2	07/08→			ATE		[-]	**PF0706**	154,8×55,2×17,7		NI		[+]	**PF0703**	93,5×46,8×14,7	
2.2	07/08→			ATE		[-]	**PF0706**	154,8×55,2×17,7		AKE		[+]	**PF0463**	88,9×47,5×14,7	
2.2	11→13			ATE	U.S.A./ Giappone	[-]	**PF0706**	154,8×55,2×17,7		NI	U.S.A./ Giappone	[+]	**PF0704**	93,5×46,8×15,1	
2.2	07/08→									NI		[+]	**PF0703**	93,5×46,8×14,7	
2.2 i-DTEC	07/08→			ATE		[-]	**PF0706**	154,8×55,2×17,7		NI		[+]	**PF0703**	93,5×46,8×14,7	
2.2 i-DTEC	07/08→			ATE		[-]	**PF0706**	154,8×55,2×17,7		AKE		[+]	**PF0463**	88,9×47,5×14,7	
2.2 i-DTEC	11→13			ATE	U.S.A./ Giappone	[-]	**PF0706**	154,8×55,2×17,7		NI	U.S.A./ Giappone	[+]	**PF0704**	93,5×46,8×15,1	
2.2 i-DTEC	07/08→									NI		[+]	**PF0703**	93,5×46,8×14,7	
Accord SW VIII															
2.0	07/08→			ATE		[-]	**PF0706**	154,8×55,2×17,7		NI		[+]	**PF0703**	93,5×46,8×14,7	
2.0	07/08→			ATE		[-]	**PF0706**	154,8×55,2×17,7		AKE		[+]	**PF0463**	88,9×47,5×14,7	
2.0	07/08→			ATE		[-]	**PF0706**	154,8×55,2×17,7		NI	U.S.A./ Giappone	[+]	**PF0704**	93,5×46,8×15,1	
2.0	07/08→									NI		[+]	**PF0703**	93,5×46,8×14,7	
2.2 i-DTEC	07/08→			ATE		[-]	**PF0706**	154,8×55,2×17,7		NI		[+]	**PF0703**	93,5×46,8×14,7	
2.2 i-DTEC	07/08→			ATE		[-]	**PF0706**	154,8×55,2×17,7		AKE		[+]	**PF0463**	88,9×47,5×14,7	
2.2 i-DTEC	07/08→			ATE		[-]	**PF0706**	154,8×55,2×17,7		NI	U.S.A./ Giappone	[+]	**PF0704**	93,5×46,8×15,1	
2.2 i-DTEC	07/08→									NI		[+]	**PF0703**	93,5×46,8×14,7	
2.4	07/08→			ATE		[-]	**PF0706**	154,8×55,2×17,7		NI		[+]	**PF0703**	93,5×46,8×14,7	
2.4	07/08→			ATE		[-]	**PF0706**	154,8×55,2×17,7		AKE		[+]	**PF0463**	88,9×47,5×14,7	
2.4	07/08→			ATE		[-]	**PF0706**	154,8×55,2×17,7		NI	U.S.A./ Giappone	[+]	**PF0704**	93,5×46,8×15,1	
2.4	07/08→									NI		[+]	**PF0703**	93,5×46,8×14,7	
Civic I / II / III															
Civic 1.3i 16V EX	94→			AK		[+]	**PF0276**	131,5×54,5×15							
Civic 1.4i 16V	94→			AK		[+]	**PF0276**	131,5×54,5×15							
Civic 1.6 16V	88→92									AK		[+]	**PF0457**	88,9×35,2×13	
Civic 1.6 Coupé	88→92									AK		[+]	**PF0457**	88,9×35,2×13	
Civic 1.6 CRX	88→92									AK		[+]	**PF0457**	88,9×35,2×13	
Civic 1.8i Aerodeck	95→98			AK	(MC2)	[+]	**PF0274**	148,7×57,7×17,3							

		KW	CV												
				SiS	i	W.i.	MAGNETI MARELLI	W×H×Th (mm)	Extra kit [Opt]	SiS	i	W.i.	MAGNETI MARELLI	W×H×Th (mm)	Extra kit [Opt]
HONDA															
Civic IV															
1.4i	94 → 97			LG	(MA8)	[+]	**PF0484**	129,2×69,7×18	OK037	AK		[+]	**PF0457**	88,9×35,2×13	
1.4i Limousine	95 →			AK		[+]	**PF0276**	131,5×54,5×15		AK		[+]	**PF0460**	99×36,6×12,7	
1.5i 16V	91 → 95			AK	(EG4)	[+]	**PF0276**	131,5×54,5×15		AK		[+]	**PF0460**	99×36,6×12,7	
1.5i 16V LS	94 → 96			AK	(EJ2)	[+]	**PF0276**	131,5×54,5×15		AK		[+]	**PF0460**	99×36,6×12,7	
1.5i 16V LS TEC	94 → 96			AK	(EJ2)	[+]	**PF0276**	131,5×54,5×15		AK		[+]	**PF0460**	99×36,6×12,7	
1.5i VTEC	94 → 97			LG	(MA9)	[+]	**PF0484**	129,2×69,7×18	OK037	AK		[+]	**PF0457**	88,9×35,2×13	
1.6i	95 →			AK	(EJ6)	[+]	**PF0276**	131,5×54,5×15		AK		[+]	**PF0460**	99×36,6×12,7	
1.6i	94 → 97			LG	(MB1)	[+]	**PF0484**	129,2×69,7×18	OK037	AK		[+]	**PF0457**	88,9×35,2×13	
1.6i 16V VT	91 → 95			AK	(EG5)	[+]	**PF0276**	131,5×54,5×15		AK		[+]	**PF0460**	99×36,6×12,7	
1.6i 16V	91 → 95	117		ST		[+]	**PF0275**	136,5×57,8×17		AK		[+]	**PF0457**	88,9×35,2×13	
1.6i	94 → 96	92		ST		[+]	**PF0275**	136,5×57,8×17		AK		[+]	**PF0457**	88,9×35,2×13	
1.6i VTEC	94 → 97			LG	(MB1)	[+]	**PF0484**	129,2×69,7×18	OK037	AK		[+]	**PF0457**	88,9×35,2×13	
Civic IV Coupé (EJ_;EM_)															
1.5i	94 → 00			AK		[+]	**PF0276**	131,5×54,5×15		AK	(EJ_)(EM_)	[+]	**PF0460**	99×36,6×12,7	
1.6i	94 → 00			AK		[+]	**PF0276**	131,5×54,5×15		AK	(EJ_)(EM_)	[+]	**PF0460**	99×36,6×12,7	
Civic V															
1.4i	95 →			AK	(EJ9)	[+]	**PF0276**	131,5×54,5×15		AK	(EG_)(EH_) (EJ_)	[+]	**PF0460**	99×36,6×12,7	
1.4i 16V	97 →			AK	(MB2)	[+]	**PF0276**	131,5×54,5×15		AK	(EG_)(EH_) (EJ_)	[+]	**PF0460**	99×36,6×12,7	
1.4i S	95 →			AK	(EJ9)	[+]	**PF0276**	131,5×54,5×15		AK	(EG_)(EH_) (EJ_)	[+]	**PF0460**	99×36,6×12,7	
1.5i	95 → 97			ST		[+]	**PF0275**	136,5×57,8×17		AK	(EG_)(EH_) (EJ_)	[+]	**PF0460**	99×36,6×12,7	
1.5i 16V	97 →			AK	(MB3)	[+]	**PF0276**	131,5×54,5×15		AK	(EG_)(EH_) (EJ_)	[+]	**PF0460**	99×36,6×12,7	
1.6i	95 → 97			ST		[+]	**PF0275**	136,5×57,8×17		AK	(EG_)(EH_) (EJ_)	[+]	**PF0460**	99×36,6×12,7	
1.6i VTI-VTEC	95 → 97			ST		[+]	**PF0275**	136,5×57,8×17		AK	(EG_)(EH_) (EJ_)	[+]	**PF0460**	99×36,6×12,7	
1.6i 16V	97 →			AK	(MB4)	[+]	**PF0276**	131,5×54,5×15		AK	(EG_)(EH_) (EJ_)	[+]	**PF0460**	99×36,6×12,7	
1.8i 16V	97 →			AK		[+]	**PF0274**	148,7×57,7×17,3		AK	(EG_)(EH_) (EJ_)	[+]	**PF0460**	99×36,6×12,7	
1.8i VTI	97 →			AK	(MB6)	[+]	**PF0274**	148,7×57,7×17,3		AK	(MB6)	[+]	**PF0462**	88,9×47,5×14,7	
1.8i VTEC	97 →			AK	(MB6)	[+]	**PF0274**	148,7×57,7×17,3		AK	(MB6)	[+]	**PF0462**	88,9×47,5×14,7	
2.0i TD	97 →			AK		[+]	**PF0276**	131,5×54,5×15		AK	(EG_)(EH_) (EJ_)	[+]	**PF0460**	99×36,6×12,7	
2.3i 16V	95 → 00			AK		[+]	**PF0274**	148,7×57,7×17,3		AK	(EG_)(EH_) (EJ_)	[+]	**PF0460**	99×36,6×12,7	

		KW	CV													
				SiS	i	W.i.	MAGNETI MARELLI	W×H×Th (mm)	Extra kit [Opt]	SiS	i	W.i.	MAGNETI MARELLI	W×H×Th (mm)	Extra kit [Opt]
HONDA															
Civic Coupé VI (EM2)															
1.6 i	02/01 → 12/05	81	110	LG		[+]	**PF0484**	129,2×69,7×18	OK037	AK		[+]	**PF0462**	88,9×47,5×14,7	
1.7 i	05/01 → 12/05	88	120	LG		[+]	**PF0484**	129,2×69,7×18	OK037	AK		[+]	**PF0462**	88,9×47,5×14,7	
1.7 i VTEC	05/01 → 12/05	92	125							AK		[+]	**PF0462**	88,9×47,5×14,7	
Civic VII															
1.4i 16V	05/01 → 01/06			LG		[+]	**PF0484**	129,2×69,7×18	OK037	AK		[+]	**PF0462**	88,9×47,5×14,7	
1.4i 16V	05/01 → 01/06			ST		[+]	**PF0275**	136,5×57,8×17		AK		[+]	**PF0462**	88,9×47,5×14,7	
1.6i 16V V-Tec	05/01 → 01/06			LG		[+]	**PF0484**	129,2×69,7×18	OK037	AK		[+]	**PF0462**	88,9×47,5×14,7	
1.6i 16V V-Tec	05/01 → 01/06			ST		[+]	**PF0275**	136,5×57,8×17		AK		[+]	**PF0462**	88,9×47,5×14,7	
1.7i	05/01 → 01/06			LG		[+]	**PF0484**	129,2×69,7×18	OK037	AK		[+]	**PF0462**	88,9×47,5×14,7	
1.7i	05/01 → 01/06			ST		[+]	**PF0275**	136,5×57,8×17		AK		[+]	**PF0462**	88,9×47,5×14,7	
1.7i V-Tec	05/01 → 01/06			LG		[+]	**PF0484**	129,2×69,7×18	OK037	AK		[+]	**PF0462**	88,9×47,5×14,7	
1.7i V-Tec	05/01 → 01/06			ST		[+]	**PF0275**	136,5×57,8×17		AK		[+]	**PF0462**	88,9×47,5×14,7	
1.7 Cdti 16V	01/02 → 01/06			LG		[+]	**PF0484**	129,2×69,7×18	OK037	AK		[+]	**PF0462**	88,9×47,5×14,7	
1.7 Cdti 16V	01/02 → 01/06			ST		[+]	**PF0275**	136,5×57,8×17		AK		[+]	**PF0462**	88,9×47,5×14,7	
Civic VIII 3 Volumi/Berlina (FD)															
1.3	02/06 →	85	116			[+]	**PF0620**	131,7×55,8×17,5	OK039	LG		[+]	**PF0621**	95,7×46,3×15,7	OK088
1.3 Hybrid	01/06 →	70	95	LG		[+]	**PF0620**	131,7×55,8×17,5	OK039	LG		[+]	**PF0621**	95,7×46,3×15,7	OK088
1.6	09/05 →	84	114	LG		[+]	**PF0620**	131,7×55,8×17,5	OK039	LG		[+]	**PF0621**	95,7×46,3×15,7	OK088
1.8	09/05 →	103	140	LG		[+]	**PF0620**	131,7×55,8×17,5	OK039	LG		[+]	**PF0621**	95,7×46,3×15,7	OK088
1.8	02/06 →	103	140	LG		[+]	**PF0620**	131,7×55,8×17,5	OK039	LG		[+]	**PF0621**	95,7×46,3×15,7	OK088
1.8	01/06 →	97	132	LG		[+]	**PF0620**	131,7×55,8×17,5	OK039	LG		[+]	**PF0621**	95,7×46,3×15,7	OK088
1.8 Flex	11/06 →	103	140	LG		[+]	**PF0620**	131,7×55,8×17,5	OK039	LG		[+]	**PF0621**	95,7×46,3×15,7	OK088
2.0	02/06 →	114	155	LG		[+]	**PF0620**	131,7×55,8×17,5	OK039	LG		[+]	**PF0621**	95,7×46,3×15,7	OK088
Civic IX (FK)															
1.4 i-VTEC	02/12 →	73	99	ATE		[+]	**PF0706**	154,8×55,2×17,7		ATE		[-]	**PF0798**	123,1×43,7×14,5	
1.6 i-DTEC	02/13 →	88	120	ATE		[+]	**PF0706**	154,8×55,2×17,7		ATE		[-]	**PF0798**	123,1×43,7×14,5	
1.8 i-VTEC	02/12 →	104	141	ATE		[+]	**PF0706**	154,8×55,2×17,7		ATE		[-]	**PF0798**	123,1×43,7×14,5	
2.2 i-DTEC	02/12 →	110	150	ATE		[+]	**PF0706**	154,8×55,2×17,7		ATE		[-]	**PF0798**	123,1×43,7×14,5	
Concerto															
1.5i 16V - DX	90 →			LG		[+]	**PF0484**	129,2×69,7×18	OK037	AK		[+]	**PF0457**	88,9×35,2×13	
1.6i 1V - SX - EX	92 →			LG	DOHC	[+]	**PF0484**	129,2×69,7×18	OK037	AK		[+]	**PF0457**	88,9×35,2×13	
CR-V I (RD)															
2.0	04/99 → 02/02	98	133	AK		[+]	**PF0274**	148,7×57,7×17,3							
2.0 16V	10/95 → 01/99	94	128	AK	(RD1, RD3)	[+]	**PF0274**	148,7×57,7×17,3							
2.0 16V	01/99 → 02/02	108	147	AK	(RD1, RD3)	[+]	**PF0274**	148,7×57,7×17,3							
CR-V II (RD_)															
2.0	07/02 → 09/06	110	150							AK		[+]	**PF0461**	88,9×47,5×14,7	
2.2 CTDi	02/05 → 09/06	103	140							AK		[+]	**PF0463**	88,9×47,5×14,7	
2.4 Vtec All-wheel Drive	03/02 → 09/06	118	160							AK	(RD7)	[+]	**PF0463**	88,9×47,5×14,7	

		KW	CV	SiS	i	W.i.	MAGNETI MARELLI	W×H×Th (mm)	Extra kit [Opt]	SiS	i	W.i.	MAGNETI MARELLI	W×H×Th (mm)	Extra kit [Opt]
HONDA															
CR-V III															
2.0 i	01/07 →	110	150	BSC		[+]	**PF0799**	151×60,3×19	OK038	AK		[+]	**PF0463**	88,9×47,5×14,7	
2.0 i-VTEC	11/09 →	105	143	BSC		[+]	**PF0799**	151×60,3×19	OK038	AK		[+]	**PF0463**	88,9×47,5×14,7	
2.2 i-CTDi	01/07 →	103	140	BSC		[+]	**PF0799**	151×60,3×19	OK038	AK		[+]	**PF0463**	88,9×47,5×14,7	
2.2 i-DTEC	01/07 →	110	150	BSC		[+]	**PF0799**	151×60,3×19	OK038	AK		[+]	**PF0463**	88,9×47,5×14,7	
2.4	04/07 →	125	170	BSC		[+]	**PF0799**	151×60,3×19	OK038	AK		[+]	**PF0463**	88,9×47,5×14,7	
2.4 4x4	09/07 →	124	168	BSC		[+]	**PF0799**	151×60,3×19	OK038	AK		[+]	**PF0463**	88,9×47,5×14,7	
2.4 i-VTEC	09/09 →	122	166	BSC		[+]	**PF0799**	151×60,3×19	OK038	AK		[+]	**PF0463**	88,9×47,5×14,7	
2.4 i-VTEC	11/09 →	118	161	BSC		[+]	**PF0799**	151×60,3×19	OK038	AK		[+]	**PF0463**	88,9×47,5×14,7	
2.4 iVtec All-wheel Drive	10/06 →	118	160	BSC		[+]	**PF0799**	151×60,3×19	OK038	AK		[+]	**PF0463**	88,9×47,5×14,7	
CR-V IV (RM)															
2.0	01/12 →	110	150	BSC		[+]	**PF0799**	151×60,3×19	OK038						
2.0	10/12 →	114	155	BSC		[+]	**PF0799**	151×60,3×19	OK038						
2.0 4x4	10/12 →	114	155	BSC		[+]	**PF0799**	151×60,3×19	OK038						
2.4	01/12 →	132	177	BSC		[+]	**PF0799**	151×60,3×19	OK038						
2.4	01/12 →	138	188	BSC		[+]	**PF0799**	151×60,3×19	OK038						
2.4	01/12 →	140	190	BSC		[+]	**PF0799**	151×60,3×19	OK038						
2.2 i-DTEC 4x4	10/12 →	110	150	BSC		[+]	**PF0799**	151×60,3×19	OK038						
2.4	09/12 →	127	173	BSC		[+]	**PF0799**	151×60,3×19	OK038						
CRX (EH;EG)															
1.5	92 → 98			ST		[+]	**PF0275**	136,5×57,8×17		AK		[+]	**PF0460**	99×36,6×12,7	
1.6i Esi	92 → 98			ST		[+]	**PF0275**	136,5×57,8×17		AK		[+]	**PF0460**	99×36,6×12,7	
1.6i 16V VTI	92 → 98			ST		[+]	**PF0275**	136,5×57,8×17		AK		[+]	**PF0460**	99×36,6×12,7	
CR-Z (ZF1)															
1.5 Hybrid	06/10 →	84	114	AK		[+]	**PF0707**	136,3×56,3×15,8		AK		[-]	**PF0462**	88,9×47,5×14,7	
1.5 Hybrid	02/13 →	89	121	AK		[+]	**PF0707**	136,3×56,3×15,8		AK		[-]	**PF0462**	88,9×47,5×14,7	
FR-V (BE)															
1.7 16V	02/05 →			ST		[+]	**PF0702**	148,7×59×16,4		AK		[+]	**PF0461**	88,9×47,5×14,7	
1.7	02/05 →	92	125	ST		[+]	**PF0702**	148,7×59×16,4		AK		[+]	**PF0463**	88,9×47,5×14,7	
1.8	01/07 →	103	140	ST		[+]	**PF0702**	148,7×59×16,4		AK		[+]	**PF0463**	88,9×47,5×14,7	
2.0	02/05 →	110	150	ST		[+]	**PF0702**	148,7×59×16,4		AK		[+]	**PF0461**	88,9×47,5×14,7	
2.0	02/05 →	110	150	ST		[+]	**PF0702**	148,7×59×16,4		AK		[+]	**PF0463**	88,9×47,5×14,7	
2.2 i CTDI	07/05 →	103	140	ST		[+]	**PF0702**	148,7×59×16,4		AK		[+]	**PF0463**	88,9×47,5×14,7	
HR-V (GH)															
1.6 16V	03/99 →	77	105	AK		[+]	**PF0274**	148,7×57,7×17,3							
1.6 16V 4WD	03/99 →	77	105	AK		[+]	**PF0274**	148,7×57,7×17,3							
1.6 16V 4WD	10/99 →	91	124	AK		[+]	**PF0274**	148,7×57,7×17,3							
Insight															
1.3 Hybrid	04/09 → 14	65	88	AK		[+]	**PF0707**	136,3×56,3×15,8							
Integra (DA)															
1.5	10/85 → 08/89	63	86							AK		[+]	**PF0457**	88,9×35,2×13	

		KW	CV	SiS	i	W.i.	MAGNETI MARELLI	W×H×Th (mm)	Extra kit [Opt]	SiS	i	W.i.	MAGNETI MARELLI	W×H×Th (mm)	Extra kit [Opt]
HONDA															
Integra (DC5)															
2.0	02/02→	118	160	AK		[+]	**PF0274**	148,7×57,7×17,3		AK		[+]	**PF0462**	88,9×47,5×14,7	
2.0	10/04→	147	200	AK		[+]	**PF0274**	148,7×57,7×17,3		AK		[+]	**PF0462**	88,9×47,5×14,7	
2.0 16V Type-R	02/02→	162	220	AK		[+]	**PF0274**	148,7×57,7×17,3		AK		[+]	**PF0462**	88,9×47,5×14,7	
2.0 Type-S	10/04→04/07	154	209	AK		[+]	**PF0274**	148,7×57,7×17,3		AK		[+]	**PF0462**	88,9×47,5×14,7	
Jazz II (GD)															
1.2	03/02→	57	78	AK		[+]	**PF0276**	131,5×54,5×15		AK		[+]	**PF0457**	88,9×35,2×13	
1.3 iDSi	03/02→09/07	63	86	AK		[+]	**PF0276**	131,5×54,5×15		AK		[+]	**PF0457**	88,9×35,2×13	
1.4	03/02→07/08	61	83	AK		[+]	**PF0276**	131,5×54,5×15		AK		[+]	**PF0457**	88,9×35,2×13	
1.4	04/05→	65	88	AK		[+]	**PF0276**	131,5×54,5×15		AK		[+]	**PF0457**	88,9×35,2×13	
1.4 Flex	12/06→07/08	59	80	AK		[+]	**PF0276**	131,5×54,5×15		AK		[+]	**PF0457**	88,9×35,2×13	
1.5	04/02→07/08	81	110	AK		[+]	**PF0276**	131,5×54,5×15		AK		[+]	**PF0457**	88,9×35,2×13	
1.5 FF	03/02→09/07	79	107	AK		[+]	**PF0276**	131,5×54,5×15		AK		[+]	**PF0457**	88,9×35,2×13	
Jazz III (GE)															
1.2	07/08→	66	90	AK		[+]	**PF0707**	136,3×56,3×15,8		AK		[+]	**PF0460**	99×36,6×12,7	
1.3 HYBRID	04/11→	65	88	AK		[+]	**PF0707**	136,3×56,3×15,8		AK		[+]	**PF0460**	99×36,6×12,7	
1.4 Flex	11/08→	74	101	AK		[+]	**PF0707**	136,3×56,3×15,8		AK		[+]	**PF0460**	99×36,6×12,7	
1.4 i	07/08→	73	100	AK		[+]	**PF0707**	136,3×56,3×15,8		AK		[+]	**PF0460**	99×36,6×12,7	
1.5 Flexfuel	07/08→	88	120	AK		[+]	**PF0707**	136,3×56,3×15,8		AK		[+]	**PF0460**	99×36,6×12,7	
1.5 i	07/08→	88	120	AK		[+]	**PF0707**	136,3×56,3×15,8		AK		[+]	**PF0460**	99×36,6×12,7	
Legend II (KA7)															
3.2 i 24V	01/91→02/96	151	205	AK		[+]	**PF0274**	148,7×57,7×17,3		AK		[+]	**PF0462**	88,9×47,5×14,7	
Legend II Coupé (KA8)															
3.2 i 24V	01/91→02/96	151	205	AK		[+]	**PF0274**	148,7×57,7×17,3		AK		[+]	**PF0462**	88,9×47,5×14,7	
Legend III (KA9)															
3.5 i 24V	02/96→	151	205	AK		[+]	**PF0274**	148,7×57,7×17,3		AK		[+]	**PF0462**	88,9×47,5×14,7	
3.5	10/04→	221	300	AK		[+]	**PF0274**	148,7×57,7×17,3		AK		[+]	**PF0462**	88,9×47,5×14,7	
Legend IV (KB)															
3.5 V6 4WD	05/06→	217	295	AK		[+]	**PF0274**	148,7×57,7×17,3		AK		[+]	**PF0462**	88,9×47,5×14,7	
3.7 VTEC V6 4WD	07/08→	217	295	AK		[+]	**PF0274**	148,7×57,7×17,3		AK		[+]	**PF0462**	88,9×47,5×14,7	
Logo (GA3)															
1.3	03/99→03/02	48	65	AK		[+]	**PF0276**	131,5×54,5×15							
NSX cabriolet (NA)															
3.0 24V Vtec	03/95→09/05	201	274	AK		[+]	**PF0274**	148,7×57,7×17,3							
3.0 24V Vtec Automatic	03/95→09/05	188	256	AK		[+]	**PF0274**	148,7×57,7×17,3							
3.2 24V Vtec	01/97→09/05	206	280	AK		[+]	**PF0274**	148,7×57,7×17,3							
NSX Coupé (NA)															
3.0 24V Vtec	06/90→09/05	201	274	AK	(NA1)	[+]	**PF0274**	148,7×57,7×17,3							
3.0 24V Vtec Automatik	06/90→09/05	188	256	AK	(NA1)	[+]	**PF0274**	148,7×57,7×17,3							
3.2 24V Vtec	01/97→09/05	206	280	AK	(NA2)	[+]	**PF0274**	148,7×57,7×17,3							

		KW	CV	SiS	i	W.i.	MAGNETI MARELLI	W×H×Th (mm)	Extra kit [Opt]	SiS	i	W.i.	MAGNETI MARELLI	W×H×Th (mm)	Extra kit [Opt]
HONDA															
Odyssey (RA_)															
2.2 4x4	10/97 → 11/00	103	140	AK		[+]	**PF0274**	148,7×57,7×17,3							
2.3 4x4	10/97 → 06/02	110	150	AK		[+]	**PF0274**	148,7×57,7×17,3							
Prelude II															
Coupé	87 →									AK		[-]	**PF0457**	88,9×35,2×13	
Prelude IV (BB)															
2.0 i 16V	02/92 → 09/96	98	133	AK	(BB3)	[+]	**PF0274**	148,7×57,7×17,3		AK		[+]	**PF0462**	88,9×47,5×14,7	
2.2 i 16V Vtec	02/93 → 09/96	136	185	AK	(BB1)	[+]	**PF0274**	148,7×57,7×17,3		AK		[+]	**PF0462**	88,9×47,5×14,7	
2.2 VTi-R	02/94 → 02/97	142	193	AK	(BB)	[+]	**PF0274**	148,7×57,7×17,3		AK		[+]	**PF0462**	88,9×47,5×14,7	
2.3 i 16V	02/92 → 09/96	118	160	AK	(BB2)	[+]	**PF0274**	148,7×57,7×17,3		AK		[+]	**PF0462**	88,9×47,5×14,7	
Prelude V (BB)															
2.0 16V	10/96 → 10/00	98	133	AK	(BB9)	[+]	**PF0274**	148,7×57,7×17,3		AK		[+]	**PF0462**	88,9×47,5×14,7	
2.2 16V	10/96 → 10/00	147	200	AK		[+]	**PF0274**	148,7×57,7×17,3		AK		[+]	**PF0462**	88,9×47,5×14,7	
2.2 16V	10/96 → 10/00	136	185	AK	(BB6, BB8)	[+]	**PF0274**	148,7×57,7×17,3		AK		[+]	**PF0462**	88,9×47,5×14,7	
2.2 Si	03/97 → 07/02	118	160	AK	(BB5)	[+]	**PF0274**	148,7×57,7×17,3		AK		[+]	**PF0462**	88,9×47,5×14,7	
2.2 VTi-R	03/97 → 10/98	142	193	AK	(BB6)	[+]	**PF0274**	148,7×57,7×17,3		AK		[+]	**PF0462**	88,9×47,5×14,7	
Shuttle (RA)															
2.2 4x4	06/94 → 09/97	102	139	AK		[+]	**PF0274**	148,7×57,7×17,3		AK		[+]	**PF0462**	88,9×47,5×14,7	
2.2 16V	10/94 → 02/98	110	150	AK		[+]	**PF0274**	148,7×57,7×17,3		AK		[+]	**PF0462**	88,9×47,5×14,7	
2.3 16V	10/97 → 06/02	110	150	AK		[+]	**PF0274**	148,7×57,7×17,3		AK		[+]	**PF0462**	88,9×47,5×14,7	
2.3 16V 4x4	10/97 → 06/02	110	150	AK		[+]	**PF0274**	148,7×57,7×17,3		AK		[+]	**PF0462**	88,9×47,5×14,7	
3.0	10/97 → 06/02	154	209	AK		[+]	**PF0274**	148,7×57,7×17,3		AK		[+]	**PF0462**	88,9×47,5×14,7	
3.0 4x4	10/97 → 06/02	154	209	AK		[+]	**PF0274**	148,7×57,7×17,3		AK		[+]	**PF0462**	88,9×47,5×14,7	
3.5	09/00 → 06/02	151	205	AK		[+]	**PF0274**	148,7×57,7×17,3		AK		[+]	**PF0462**	88,9×47,5×14,7	
3.5 ESi	09/00 → 06/02	171	233	AK		[+]	**PF0274**	148,7×57,7×17,3		AK		[+]	**PF0462**	88,9×47,5×14,7	
Stream (RN)															
1.7 16V	05/01 →	92	125	ST		[+]	**PF0702**	148,7×59×16,4		AK		[+]	**PF0461**	88,9×47,5×14,7	
2.0 16V	05/01 →	115	156	ST		[+]	**PF0702**	148,7×59×16,4		AK		[+]	**PF0461**	88,9×47,5×14,7	
HYUNDAI															
Accent I (X-3)															
1.3	10/94 → 01/00	44	60	AK		[+]	**PF0459**	127,5×49×15,5							
1.3	10/94 → 01/00	55	75	AK		[+]	**PF0459**	127,5×49×15,5							
1.3	09/95 → 05/98	40	54	AK		[+]	**PF0459**	127,5×49×15,5							
1.3 i 12V	10/94 → 01/00	62	84	AK		[+]	**PF0459**	127,5×49×15,5							
1.5 i 12V	10/94 → 01/00	65	88	AK		[+]	**PF0459**	127,5×49×15,5							
1.5 i 16V	12/95 → 01/00	73	99	AK		[+]	**PF0459**	127,5×49×15,5							
Accent I 3 Volumi (X-3)															
1.3	10/94 → 01/00	44	60	AK		[+]	**PF0459**	127,5×49×15,5							
1.3	10/94 → 01/00	55	75	AK		[+]	**PF0459**	127,5×49×15,5							
1.3 i 12V	10/94 → 01/00	62	84	AK		[+]	**PF0459**	127,5×49×15,5							
1.5 i 12V	10/94 → 01/00	65	88	AK		[+]	**PF0459**	127,5×49×15,5							
1.5 i 16V	10/95 → 01/00	73	99	AK		[+]	**PF0459**	127,5×49×15,5							

		KW	CV	SiS	i	W.i.	MAGNETI MARELLI	W×H×Th (mm)	Extra kit [Opt]	SiS	i	W.i.	MAGNETI MARELLI	W×H×Th (mm)	Extra kit [Opt]
HYUNDAI															
Accent II (LC)															
1.3	01/00 →	55	75	AK		[+]	**PF0459**	127,5×49×15,5							
1.3	01/00 →	61	83	AK		[+]	**PF0459**	127,5×49×15,5							
1.3	01/00 →	63	86	AK		[+]	**PF0459**	127,5×49×15,5							
1.3	08/02 →	62	84	AK		[+]	**PF0459**	127,5×49×15,5							
1.5	09/00 →	75	102	AK		[+]	**PF0459**	127,5×49×15,5							
1.5	01/00 →	66	90	AK		[+]	**PF0459**	127,5×49×15,5							
1.5 CRDi	04/02 →	60	82	AK		[+]	**PF0459**	127,5×49×15,5							
1.6	12/02 →	77	105	AK		[+]	**PF0459**	127,5×49×15,5							
Accent II 3 Volumi (LC)															
1.3	01/00 → 11/05	55	75	AK		[+]	**PF0459**	127,5×49×15,5							
1.3	01/00 → 11/05	63	86	AK		[+]	**PF0459**	127,5×49×15,5							
1.5	01/00 →	69	94	AK		[+]	**PF0459**	127,5×49×15,5							
1.5	01/00 → 11/05	66	90	AK		[+]	**PF0459**	127,5×49×15,5							
1.5	09/99 → 10/02	75	102	AK		[+]	**PF0459**	127,5×49×15,5							
1.5 CRDi	01/02 → 11/05	60	82	AK		[+]	**PF0459**	127,5×49×15,5							
1.6	12/02 → 11/05	77	105	AK		[+]	**PF0459**	127,5×49×15,5							
Accent III (MC)															
1.4 GL	11/05 →	71	97	MN		[-]	**PF0698**	129,8×56×17,5							
1.5 CRDi GLS	11/05 →	81	110	MN		[-]	**PF0698**	129,8×56×17,5							
1.6 GLS	11/05 →	82	112	MN		[-]	**PF0698**	129,8×56×17,5							
Accent III 3 Volumi (MC)															
1.4 GL	11/05 →	71	97	MN		[-]	**PF0698**	129,8×56×17,5							
1.5	01/08 →	70	95	MN		[-]	**PF0698**	129,8×56×17,5							
1.5 CRDi GLS	11/05 →	81	110	MN		[-]	**PF0698**	129,8×56×17,5							
1.5 LPG	01/08 →	70	95	MN		[-]	**PF0698**	129,8×56×17,5							
1.6 GLS	11/05 →	82	112	MN		[-]	**PF0698**	129,8×56×17,5							
Accent IV (RB)															
1.4	11/10 →	79	107	MN		[+]	**PF0766**	132,7×58,2×17,8		AK	+ABS	[+]	**PF0750**	99,7×40,9×15,7	
1.6	11/10 →	90	122	MN		[+]	**PF0766**	132,7×58,2×17,8		AK	+ABS	[+]	**PF0750**	99,7×40,9×15,7	
1.6 CRDi	10/11 →	94	128	MN		[+]	**PF0766**	132,7×58,2×17,8		AK	+ABS	[+]	**PF0750**	99,7×40,9×15,7	
Accent IV Tre volumi (RB)															
1.4	11/10 →	79	107	MN		[+]	**PF0766**	132,7×58,2×17,8		AK	+ABS	[+]	**PF0750**	99,7×40,9×15,7	
1.6	11/10 →	90	122	MN		[+]	**PF0766**	132,7×58,2×17,8		AK	+ABS	[+]	**PF0750**	99,7×40,9×15,7	
1.6	11/10 →	91	123	MN		[+]	**PF0766**	132,7×58,2×17,8		AK	+ABS	[+]	**PF0750**	99,7×40,9×15,7	
1.4 CRDi	11/10 →	66	90	MN		[+]	**PF0766**	132,7×58,2×17,8		AK	+ABS	[+]	**PF0750**	99,7×40,9×15,7	
1.6 CRDi	10/11 →	94	128	MN		[+]	**PF0766**	132,7×58,2×17,8		AK	+ABS	[+]	**PF0750**	99,7×40,9×15,7	
Amica															
1.0	99 → 00			MN		[+]	**PF0800**	104,6×41,7×16							
Atos (MX)															
0.8	04/99 → 07/03	38	52	MN		[+]	**PF0800**	104,6×41,7×16							
1.0 i	02/98 → 03/02	40	54	MN		[+]	**PF0800**	104,6×41,7×16							
1.0 i	03/01 →	43	58	MN		[+]	**PF0800**	104,6×41,7×16							
1.1	03/04 →	46	63	MN		[+]	**PF0800**	104,6×41,7×16							
1.1	08/03 → 05/05	43	58	MN		[+]	**PF0800**	104,6×41,7×16							

		KW	CV	SiS	i	W.i.	MAGNETI MARELLI	W×H×Th (mm)	Extra kit [Opt]	SiS	i	W.i.	MAGNETI MARELLI	W×H×Th (mm)	Extra kit [Opt]
HYUNDAI															
Atos (MX)															
1.1	06/05 →	46	63	MN		[+]	**PF0800**	104,6×41,7×16							
1.3	08/03 → 08/08	63	85	MN		[+]	**PF0800**	104,6×41,7×16							
Atos Prime (MX)															
1.0 i	08/99 →	40	54	MN	Ø Disc 234	[+]	**PF0655**	104,7×47×16							
1.0 i	08/99 →	43	58	MN	Ø Disc 234	[+]	**PF0655**	104,7×47×16							
1.1	08/99 →	43	59	MN	Ø Disc 234	[+]	**PF0655**	104,7×47×16							
1.1	08/99 →	46	63	MN	Ø Disc 234	[+]	**PF0655**	104,7×47×16							
Coupé															
1.6i 16V	96 → 10/97			ST		[+]	**PF0468**	137×54,3×17							
1.6i 16V	97 →			ST		[+]	**PF0467**	137×53×17							
2.0i 16V	96 → 10/97			ST		[+]	**PF0468**	137×54,3×17							
2.0i 16V	97 →			ST		[+]	**PF0467**	137×53×17							
2.7i V6	97 →			ST		[+]	**PF0467**	137×53×17							
Coupé II (GK)															
1.6 16V	03/02 →	77	105	AK		[+]	**PF0277**	131,3×60,2×17,6							
1.6 16V	03/02 →	79	107	AK		[+]	**PF0277**	131,3×60,2×17,6							
2.0	03/02 →	102	139	AK		[+]	**PF0277**	131,3×60,2×17,6							
2.0	08/01 →	100	136	AK		[+]	**PF0277**	131,3×60,2×17,6							
2.0 GLS	02/03 →	105	143	AK		[+]	**PF0277**	131,3×60,2×17,6							
2.7 V6	03/02 →	123	167	AK		[+]	**PF0277**	131,3×60,2×17,6							
2.7 V6	01/07 →	121	165	AK		[+]	**PF0277**	131,3×60,2×17,6							
Elantra															
1.5	90 → 05/95			AK		[+]	**PF0459**	127,5×49×15,5							
1.6	91 → 05/95			AK		[+]	**PF0459**	127,5×49×15,5							
1.6 16V	05/95 → 01			ST		[+]	**PF0468**	137×54,3×17							
1.8	93 → 05/95			AK		[+]	**PF0459**	127,5×49×15,5							
1.8 16V	06/95 → 01			ST		[+]	**PF0468**	137×54,3×17							
2.0i 16V	06/00 → 01			ST		[+]	**PF0468**	137×54,3×17							
2.0d.	06/95 → 01			ST	+ABS	[+]	**PF0468**	137×54,3×17							
2.0 Crdi	06/00 → 01			ST		[+]	**PF0468**	137×54,3×17							
Elantra II (XD)															
1.6	06/00 →	79	107	AK		[+]	**PF0469**	137×63,4×17,8							
1.6	05/03 →	77	105	AK		[+]	**PF0469**	137×63,4×17,8							
1.6	09/03 →	82	112	AK		[+]	**PF0469**	137×63,4×17,8							
1.6	06/00 → 07/06	66	90	AK		[+]	**PF0469**	137×63,4×17,8							
1.6 CRDi	02/06 →	85	116	AK		[+]	**PF0469**	137×63,4×17,8							
1.8	06/00 →	97	132	AK		[+]	**PF0469**	137×63,4×17,8							
1.8	11/02 →	98	133	AK		[+]	**PF0469**	137×63,4×17,8							
1.8	06/00 → 07/03	79	107	AK		[+]	**PF0469**	137×63,4×17,8							
2.0	06/00 →	104	141	AK		[+]	**PF0469**	137×63,4×17,8							
2.0	06/00 →	102	139	AK		[+]	**PF0469**	137×63,4×17,8							
2.0	10/03 →	105	143	AK		[+]	**PF0469**	137×63,4×17,8							
2.0 CRDi	04/01 →	83	113	AK		[+]	**PF0469**	137×63,4×17,8							

		KW	CV	SiS	i	W.i.	MAGNETI MARELLI	W×H×Th (mm)	Extra kit [Opt]	SiS	i	W.i.	MAGNETI MARELLI	W×H×Th (mm)	Extra kit [Opt]
HYUNDAI															
Elantra II tre volumi (XD)															
1.6	06/00 →	79	107	AK		[+]	**PF0469**	137×63,4×17,8							
1.6	05/03 →	77	105	AK		[+]	**PF0469**	137×63,4×17,8							
1.6	06/00 → 07/06	66	90	AK		[+]	**PF0469**	137×63,4×17,8							
1.6 CRDi	02/06 →	85	116	AK		[+]	**PF0469**	137×63,4×17,8							
1.8	06/04 →	93	127	AK		[+]	**PF0469**	137×63,4×17,8							
1.8	06/00 →	97	132	AK		[+]	**PF0469**	137×63,4×17,8							
1.8	06/00 → 07/03	79	107	AK		[+]	**PF0469**	137×63,4×17,8							
2.0	06/00 →	104	141	AK		[+]	**PF0469**	137×63,4×17,8							
2.0	06/00 →	102	139	AK		[+]	**PF0469**	137×63,4×17,8							
2.0	10/03 →	105	143	AK		[+]	**PF0469**	137×63,4×17,8							
2.0 CRDi	04/01 →	83	113	AK		[+]	**PF0469**	137×63,4×17,8							
Elantra (MD,UD)															
1.6	06/11 →	79	107	AK		[+]	**PF0749**	132,9×60×17,5							
1.8	06/11 →	79	107	AK		[+]	**PF0749**	132,9×60×17,5							
Excel															
1.3i GL	90 →			AK		[+]	**PF0459**	127,5×49×15,5							
1.3i GLS	90 →			AK		[+]	**PF0459**	127,5×49×15,5							
1.5i GL - GLS - L - SLX	90 →			AK		[+]	**PF0459**	127,5×49×15,5							
Galloper II (JK-01)															
2.5 TCi D	08/98 →	77	105	AK		[+]	**PF0277**	131,3×60,2×17,6							
2.5 TD	08/98 →	65	88	AK		[+]	**PF0277**	131,3×60,2×17,6							
2.5 TD intercooler	08/98 →	73	99	AK		[+]	**PF0277**	131,3×60,2×17,6							
2.6 TD All-wheel Drive	08/98 → 06/03	63	86	AK		[+]	**PF0277**	131,3×60,2×17,6							
3.0 V6	08/98 →	104	141	AK		[+]	**PF0277**	131,3×60,2×17,6							
Getz (TB)															
1.1	09/02 → 06/09	46	63	AK		[+]	**PF0459**	127,5×49×15,5							
1.1	09/05 → 06/09	49	67	AK		[+]	**PF0459**	127,5×49×15,5							
1.3	09/04 → 06/09	61	83	AK		[+]	**PF0459**	127,5×49×15,5							
1.3	09/03 → 06/09	63	85	AK		[+]	**PF0459**	127,5×49×15,5							
1.3 i	09/02 → 06/09	60	82	AK		[+]	**PF0459**	127,5×49×15,5							
1.4 i	08/05 → 06/09	71	97	AK		[+]	**PF0459**	127,5×49×15,5							
1.5 CRDi	03/03 → 06/09	60	82	AK		[+]	**PF0459**	127,5×49×15,5							
1.5 CRDi	08/05 → 06/09	65	88	AK		[+]	**PF0459**	127,5×49×15,5							
1.5 CRDi GLS	07/04 → 06/09	75	102	AK		[+]	**PF0459**	127,5×49×15,5							
1.5 CRDi GLS	08/05 → 06/09	81	110	AK		[+]	**PF0459**	127,5×49×15,5							
1.5 i	03/03 → 06/09	73	99	AK		[+]	**PF0459**	127,5×49×15,5							
1.6	09/02 → 06/09	77	106	AK		[+]	**PF0459**	127,5×49×15,5							
1.6	08/05 → 06/09	78	106	AK		[+]	**PF0459**	127,5×49×15,5							
Grandeur															
2.0	06/03 → 05/05	109	148	AK		[+]	**PF0282**	149×58,1×17							
3.5	10/02 → 05/05	145	197	AK		[+]	**PF0282**	149×58,1×17							

		KW	CV	SiS	i	W.i.	MAGNETI MARELLI	W×H×Th (mm)	Extra kit [Opt]	SiS	i	W.i.	MAGNETI MARELLI	W×H×Th (mm)	Extra kit [Opt]
HYUNDAI															
Grandeur (TG)															
2.2 CRDi	06/06 →	110	150							MN		[+]	**PF0278**	98,4×41×15	
2.2 CRDi	06/06 →	114	155							MN		[+]	**PF0278**	98,4×41×15	
2.7	05/06 →	141	192							MN		[+]	**PF0278**	98,4×41×15	
3.3	11/10 →	191	260							MN		[+]	**PF0278**	98,4×41×15	
3.3	04/05 →	173	235							MN		[+]	**PF0278**	98,4×41×15	
3.8	06/05 →	195	265							MN		[+]	**PF0278**	98,4×41×15	
Grand Santa Fe															
2.2 CRDI	06/13 →	145	197	MN		[+]	**PF0767**	156,8×60,7×17							
H-1 (KMF)															
2.4 Mpi 4WD	10/97 →			MN		[+]	**PF0279**	147×53,5×16,5							
2.4 Mpi 4WD	10/97 →			MN		[+]	**PF0282**	149×58,1×17							
2.5 D	10/97 →			MN		[+]	**PF0279**	147×53,5×16,5							
2.5 D	10/97 →			AK		[+]	**PF0282**	149×58,1×17							
2.5 TD	10/97 →			MN		[+]	**PF0279**	147×53,5×16,5							
2.5 TD	10/97 →			AK		[+]	**PF0282**	149×58,1×17							
2.5 Tci	10/97 →			MN		[+]	**PF0279**	147×53,5×16,5							
2.5 Tci	10/97 →			AK		[+]	**PF0282**	149×58,1×17							
2.5 CRDi	10/97 →			MN		[+]	**PF0279**	147×53,5×16,5							
2.5 CRDi	10/97 →			AK		[+]	**PF0282**	149×58,1×17							
Highway Van															
2.0 16V	03/00 →	100	136	AK		[+]	**PF0282**	149×58,1×17							
2.7 V6 24V	03/00 →	125	170	AK		[+]	**PF0282**	149×58,1×17							
i10															
1.1	04/11 →	51	69	ST		[+]	**PF0280**	116,2×47,5×16,8	OK092	MN	+ABS	[+]	**PF0745**	92,4×41×14,8	
1.1	01/08 →	49	67	ST		[+]	**PF0280**	116,2×47,5×16,8	OK092	MN	+ABS	[+]	**PF0745**	92,4×41×14,8	
1.1	12/07 →	48	65	ST		[+]	**PF0280**	116,2×47,5×16,8	OK092	MN	+ABS	[+]	**PF0745**	92,4×41×14,8	
1.1 CRDi	01/08 →	55	75	ST		[+]	**PF0280**	116,2×47,5×16,8	OK092	MN	+ABS	[+]	**PF0745**	92,4×41×14,8	
1.2	10/07 →			ST		[+]	**PF0280**	116,2×47,5×16,8	OK092	MN	+ABS	[+]	**PF0745**	92,4×41×14,8	
1.2	10/07 →									MN	+ABS	[+]	**PF0745**	92,4×41×14,8	
i20 (PB, PBT)															
1.2	09/08 →	57	78	MN	-ESP	[+]	**PF0698**	129,8×56×17,5		MN	+ABS	[+]	**PF0701**	93,1×41×14,9	
1.2	09/08 →	57	78	MN	+ESP	[+]	**PF0801**	129,8×56×17,5		MN	+ABS	[+]	**PF0701**	93,1×41×14,9	
1.2	08/08 →	59	80	MN	-ESP	[+]	**PF0698**	129,8×56×17,5		MN	+ABS	[+]	**PF0701**	93,1×41×14,9	
1.2	08/08 →	59	80	MN	+ESP	[+]	**PF0801**	129,8×56×17,5		MN	+ABS	[+]	**PF0701**	93,1×41×14,9	
1.4	09/08 →	74	101	MN	-ESP	[+]	**PF0698**	129,8×56×17,5		MN	+ABS	[+]	**PF0701**	93,1×41×14,9	
1.4	09/08 →	74	101	MN	+ESP	[+]	**PF0801**	129,8×56×17,5		MN	+ABS	[+]	**PF0701**	93,1×41×14,9	
1.4 CRDi	08/09 →	55	75	MN	-ESP	[+]	**PF0698**	129,8×56×17,5		MN	+ABS	[+]	**PF0701**	93,1×41×14,9	
1.4 CRDi	08/09 →	55	75	MN	+ESP	[+]	**PF0801**	129,8×56×17,5		MN	+ABS	[+]	**PF0701**	93,1×41×14,9	
1.4 CRDi	08/08 →	66	90	MN	-ESP	[+]	**PF0698**	129,8×56×17,5		MN	+ABS	[+]	**PF0701**	93,1×41×14,9	
1.4 CRDi	08/08 →	66	90	MN	+ESP	[+]	**PF0801**	129,8×56×17,5		MN	+ABS	[+]	**PF0701**	93,1×41×14,9	
1.6	09/08 →	93	126	MN	-ESP	[+]	**PF0698**	129,8×56×17,5		MN	+ABS	[+]	**PF0701**	93,1×41×14,9	
1.6	09/08 →	93	126	MN	+ESP	[+]	**PF0801**	129,8×56×17,5		MN	+ABS	[+]	**PF0701**	93,1×41×14,9	
1.6 CRDi	09/08 →	85	116	MN	-ESP	[+]	**PF0698**	129,8×56×17,5		MN	+ABS	[+]	**PF0701**	93,1×41×14,9	
1.6 CRDi	09/08 →	85	116	MN	+ESP	[+]	**PF0801**	129,8×56×17,5		MN	+ABS	[+]	**PF0701**	93,1×41×14,9	





KW	CV	SiS	i	W.i.	MAGNETI MARELLI	W×H×Th (mm)	Extra kit [Opt]	SiS	i	W.i.	MAGNETI MARELLI	W×H×Th (mm)	Extra kit [Opt]
HYUNDAI													
i30 (FD_)													
1.4	10/07 → 12	80	109	MN		[+]	PF0281	130,1×58,1×16,4		MN	+ABS	[+]	PF0701	93,1×41×14,9	
1.4	10/07 → 12	77	105	MN		[+]	PF0281	130,1×58,1×16,4		MN	+ABS	[+]	PF0701	93,1×41×14,9	
1.6	10/07 → 12	90	122	MN		[+]	PF0281	130,1×58,1×16,4		MN	+ABS	[+]	PF0701	93,1×41×14,9	
1.6	10/07 → 12	85	116	MN		[+]	PF0281	130,1×58,1×16,4		MN	+ABS	[+]	PF0701	93,1×41×14,9	
1.6	02/08 → 12	93	126	MN		[+]	PF0281	130,1×58,1×16,4		MN	+ABS	[+]	PF0701	93,1×41×14,9	
1.6 CRDi	10/07 → 12	66	90	MN		[+]	PF0281	130,1×58,1×16,4		MN	+ABS	[+]	PF0701	93,1×41×14,9	
1.6 CRDi	10/07 → 12	85	116	MN		[+]	PF0281	130,1×58,1×16,4		MN	+ABS	[+]	PF0701	93,1×41×14,9	
1.6 CRDi	01/10 → 12	94	128	MN		[+]	PF0281	130,1×58,1×16,4		MN	+ABS	[+]	PF0701	93,1×41×14,9	
2.0	10/07 → 12	105	143	MN		[+]	PF0281	130,1×58,1×16,4		MN	+ABS	[+]	PF0701	93,1×41×14,9	
2.0 CRDi	10/07 → 12	103	140	MN		[+]	PF0281	130,1×58,1×16,4		MN	+ABS	[+]	PF0701	93,1×41×14,9	
i30 CW (FD_)													
1.4	10/07 → 12	80	109	MN		[+]	PF0281	130,1×58,1×16,4		MN	+ABS	[+]	PF0701	93,1×41×14,9	
1.4	10/07 → 12	77	105	MN		[+]	PF0281	130,1×58,1×16,4		MN	+ABS	[+]	PF0701	93,1×41×14,9	
1.6	10/07 → 12	90	122	MN		[+]	PF0281	130,1×58,1×16,4		MN	+ABS	[+]	PF0701	93,1×41×14,9	
1.6	10/07 → 12	85	116	MN		[+]	PF0281	130,1×58,1×16,4		MN	+ABS	[+]	PF0701	93,1×41×14,9	
1.6	02/08 → 12	93	126	MN		[+]	PF0281	130,1×58,1×16,4		MN	+ABS	[+]	PF0701	93,1×41×14,9	
1.6 CRDi	10/07 → 12	66	90	MN		[+]	PF0281	130,1×58,1×16,4		MN	+ABS	[+]	PF0701	93,1×41×14,9	
1.6 CRDi	10/07 → 12	85	116	MN		[+]	PF0281	130,1×58,1×16,4		MN	+ABS	[+]	PF0701	93,1×41×14,9	
1.6 CRDi	01/10 → 12	94	128	MN		[+]	PF0281	130,1×58,1×16,4		MN	+ABS	[+]	PF0701	93,1×41×14,9	
2.0	10/07 → 12	105	143	MN		[+]	PF0281	130,1×58,1×16,4		MN	+ABS	[+]	PF0701	93,1×41×14,9	
2.0 CRDi	10/07 → 12	103	140	MN		[+]	PF0281	130,1×58,1×16,4		MN	+ABS	[+]	PF0701	93,1×41×14,9	
i30 (GD_)													
1.4	06/12 →	73	99	MN	15"	[+]	PF0281	130,1×58,1×16,4		MN	+ABS	[+]	PF0701	93,1×41×14,9	
1.4	06/12 →	73	99							MN	+ABS	[+]	PF0701	93,1×41×14,9	
1.4 CRDi	06/12 →	66	90	MN	15"	[+]	PF0281	130,1×58,1×16,4		MN	+ABS	[+]	PF0701	93,1×41×14,9	
1.4 CRDi	06/12 →	66	90							MN	+ABS	[+]	PF0701	93,1×41×14,9	
1.6	06/12 →	88	120	MN	15"	[+]	PF0281	130,1×58,1×16,4		MN	+ABS	[+]	PF0701	93,1×41×14,9	
1.6	06/12 →	88	120							MN	+ABS	[+]	PF0701	93,1×41×14,9	
1.6	06/12 →	95	129	MN	15"	[+]	PF0281	130,1×58,1×16,4		MN	+ABS	[+]	PF0701	93,1×41×14,9	
1.6	06/12 →	95	129							MN	+ABS	[+]	PF0701	93,1×41×14,9	
1.6 CRDi	06/12 →	81	110	MN	15"	[+]	PF0281	130,1×58,1×16,4		MN	+ABS	[+]	PF0701	93,1×41×14,9	
1.6 CRDi	06/12 →	81	110							MN	+ABS	[+]	PF0701	93,1×41×14,9	
1.6 GDI	06/12 →	99	135	MN	15"	[+]	PF0281	130,1×58,1×16,4		MN	+ABS	[+]	PF0701	93,1×41×14,9	
1.6 GDI	06/12 →	99	135							MN	+ABS	[+]	PF0701	93,1×41×14,9	
i30 CW (GD_)													
1.4	06/12 →	73	99	MN	15"	[+]	PF0281	130,1×58,1×16,4		MN	+ABS	[+]	PF0701	93,1×41×14,9	
1.4	06/12 →	73	99							MN	+ABS	[+]	PF0701	93,1×41×14,9	
1.4 CRDi	06/12 →	66	90	MN	15"	[+]	PF0281	130,1×58,1×16,4		MN	+ABS	[+]	PF0701	93,1×41×14,9	
1.4 CRDi	06/12 →	66	90							MN	+ABS	[+]	PF0701	93,1×41×14,9	
1.6	06/12 →	88	120	MN	15"	[+]	PF0281	130,1×58,1×16,4		MN	+ABS	[+]	PF0701	93,1×41×14,9	
1.6	06/12 →	88	120							MN	+ABS	[+]	PF0701	93,1×41×14,9	
1.6	06/12 →	95	129	MN	15"	[+]	PF0281	130,1×58,1×16,4		MN	+ABS	[+]	PF0701	93,1×41×14,9	
1.6	06/12 →	95	129							MN	+ABS	[+]	PF0701	93,1×41×14,9	
1.6 CRDi	06/12 →	81	110	MN	15"	[+]	PF0281	130,1×58,1×16,4		MN	+ABS	[+]	PF0701	93,1×41×14,9	

		KW	CV	SiS	i	W.i.	MAGNETI MARELLI	W×H×Th (mm)	Extra kit [Opt]	SiS	i	W.i.	MAGNETI MARELLI	W×H×Th (mm)	Extra kit [Opt]
HYUNDAI															
i30 CW (GD_)															
1.6 CRDi	06/12→	81	110							MN	+ABS	[+]	**PF0701**	93,1×41×14,9	
1.6 CRDi	06/12→	94	128	MN	15"	[+]	**PF0281**	130,1×58,1×16,4		MN	+ABS	[+]	**PF0701**	93,1×41×14,9	
1.6 CRDi	06/12→	94	128							MN	+ABS	[+]	**PF0701**	93,1×41×14,9	
1.6 GDI	06/12→	99	135	MN	15"	[+]	**PF0281**	130,1×58,1×16,4		MN	+ABS	[+]	**PF0701**	93,1×41×14,9	
1.6 GDI	06/12→	99	135							MN	+ABS	[+]	**PF0701**	93,1×41×14,9	
i30 Coupé (GD_)															
1.4	05/13→	73	99	MN	15"	[+]	**PF0281**	130,1×58,1×16,4		MN	+ABS	[+]	**PF0701**	93,1×41×14,9	
1.4	05/13→	73	99							MN	+ABS	[+]	**PF0701**	93,1×41×14,9	
1.4 CRDi	05/13→	66	90	MN	15"	[+]	**PF0281**	130,1×58,1×16,4		MN	+ABS	[+]	**PF0701**	93,1×41×14,9	
1.4 CRDi	05/13→	66	90							MN	+ABS	[+]	**PF0701**	93,1×41×14,9	
1.6 CRDi	05/13→	94	128	MN	15"	[+]	**PF0281**	130,1×58,1×16,4		MN	+ABS	[+]	**PF0701**	93,1×41×14,9	
1.6 CRDi	05/13→	94	128							MN	+ABS	[+]	**PF0701**	93,1×41×14,9	
1.6 GDI	05/13→	99	135	MN	15"	[+]	**PF0281**	130,1×58,1×16,4		MN	+ABS	[+]	**PF0701**	93,1×41×14,9	
1.6 GDI	05/13→	99	135							MN	+ABS	[+]	**PF0701**	93,1×41×14,9	
i40 CW (VF)															
1.6 GDI	07/11→	99	135							AK	Europa	[+]	**PF0751**	99,9×41×15,5	
1.6 GDI	07/11→	99	135							AK	+ABS	[+]	**PF0750**	99,7×40,9×15,7	
1.7 CRDi	07/11→	85	116							AK	Europa	[+]	**PF0751**	99,9×41×15,5	
1.7 CRDi	07/11→	85	116							AK	+ABS	[+]	**PF0750**	99,7×40,9×15,7	
1.7 CRDi	07/11→	100	136							AK	Europa	[+]	**PF0751**	99,9×41×15,5	
1.7 CRDi	07/11→	100	136							AK	+ABS	[+]	**PF0750**	99,7×40,9×15,7	
2.0 GDI	07/11→	130	177							AK	Europa	[+]	**PF0751**	99,9×41×15,5	
2.0 GDI	07/11→	130	177							AK	+ABS	[+]	**PF0750**	99,7×40,9×15,7	
2.0 GDI	03/12→	131	178							AK	Europa	[+]	**PF0751**	99,9×41×15,5	
2.0 GDI	03/12→	131	178							AK	+ABS	[+]	**PF0750**	99,7×40,9×15,7	
ix35 (LM)															
1.6	11/10→	99	135							MN	+ABS	[+]	**PF0701**	93,1×41×14,9	
1.7 CRDi	11/10→	85	116							MN	+ABS	[+]	**PF0701**	93,1×41×14,9	
2.0	01/10→	120	163							MN	+ABS	[+]	**PF0701**	93,1×41×14,9	
2.0	01/10→	122	166							MN	+ABS	[+]	**PF0701**	93,1×41×14,9	
2.0 All-wheel Drive	01/10→	120	163							MN	+ABS	[+]	**PF0701**	93,1×41×14,9	
2.0 CRDi	01/10→	100	136							MN	+ABS	[+]	**PF0701**	93,1×41×14,9	
2.0 CRDi All-wheel Drive	01/10→	100	136							MN	+ABS	[+]	**PF0701**	93,1×41×14,9	
2.0 CRDi AWD	01/10→	135	184							MN	+ABS	[+]	**PF0701**	93,1×41×14,9	
2.4 All-wheel Drive AWD	01/10→	130	177							MN	+ABS	[+]	**PF0701**	93,1×41×14,9	
Lantra															
1.6i 16V GLS - SW	95→			ST		[+]	**PF0467**	137×53×17							
1.6i 16V GLS - SW	95→			ST		[+]	**PF0468**	137×54,3×17							

		KW	CV	SiS	i	W.i.	MAGNETI MARELLI	W×H×Th (mm)	Extra kit [Opt]	SiS	i	W.i.	MAGNETI MARELLI	W×H×Th (mm)	Extra kit [Opt]
HYUNDAI															
Lantra															
1.8i 16V GLS	95→			ST		[+]	**PF0467**	137×53×17							
1.8i 16V GLS	95→			ST		[+]	**PF0468**	137×54,3×17							
1.9 TD	95→			ST		[+]	**PF0467**	137×53×17							
1.9 TD	95→			ST		[+]	**PF0468**	137×54,3×17							
Matrix (FC)															
1.5 CRDi	10/01→	60	82	ST		[+]	**PF0467**	137×53×17		MN		[+]	**PF0278**	98,4×41×15	
1.5 CRDi	12/04→	75	102	ST		[+]	**PF0467**	137×53×17		MN		[+]	**PF0278**	98,4×41×15	
1.5 CRDi VGT	08/05→	81	110	ST		[+]	**PF0467**	137×53×17		MN		[+]	**PF0278**	98,4×41×15	
1.6	06/01→	76	103	ST		[+]	**PF0467**	137×53×17		MN		[+]	**PF0278**	98,4×41×15	
1.6	01/02→12/05	66	90	ST		[+]	**PF0467**	137×53×17		MN		[+]	**PF0278**	98,4×41×15	
1.8	06/01→	90	122	ST		[+]	**PF0467**	137×53×17		MN		[+]	**PF0278**	98,4×41×15	
Pony															
1.3i XP - LS - GS - GLS	92→			AK		[+]	**PF0459**	127,5×49×15,5							
1.5i XP - LS - GS - GLS	92→			AK		[+]	**PF0459**	127,5×49×15,5							
Santa Fe (SM)															
2.0	08/01→	99	135	AK		[+]	**PF0282**	149×58,1×17		MN		[+]	**PF0278**	98,4×41×15	
2.0 CRDi	08/01→	83	113	AK		[+]	**PF0282**	149×58,1×17		MN		[+]	**PF0278**	98,4×41×15	
2.0 CRDi 4x4	04/01→	83	113	AK		[+]	**PF0282**	149×58,1×17		MN		[+]	**PF0278**	98,4×41×15	
2.0 CRDi 4x4	08/03→	92	125	AK		[+]	**PF0282**	149×58,1×17		MN		[+]	**PF0278**	98,4×41×15	
2.0 CRDi All-wheel Drive	11/03→02/06	107	145	AK		[+]	**PF0282**	149×58,1×17		MN		[+]	**PF0278**	98,4×41×15	
2.2 CRDi	10/05→	110	150	AK		[+]	**PF0282**	149×58,1×17		MN		[+]	**PF0278**	98,4×41×15	
2.2 CRDi 4x4	10/05→	110	150	AK		[+]	**PF0282**	149×58,1×17		MN		[+]	**PF0278**	98,4×41×15	
2.4 16V	02/01→	100	136	AK		[+]	**PF0282**	149×58,1×17		MN		[+]	**PF0278**	98,4×41×15	
2.4 16V	02/01→	107	146	AK		[+]	**PF0282**	149×58,1×17		MN		[+]	**PF0278**	98,4×41×15	
2.4 16V 4x4	02/01→	100	136	AK		[+]	**PF0282**	149×58,1×17		MN		[+]	**PF0278**	98,4×41×15	
2.4 16V 4x4	02/01→	107	146	AK		[+]	**PF0282**	149×58,1×17		MN		[+]	**PF0278**	98,4×41×15	
2.7	10/05→	139	189	AK		[+]	**PF0282**	149×58,1×17		MN		[+]	**PF0278**	98,4×41×15	
2.7 4x4	11/00→03/06	132	180	AK		[+]	**PF0282**	149×58,1×17		MN		[+]	**PF0278**	98,4×41×15	
2.7 4x4	10/05→	139	189	AK		[+]	**PF0282**	149×58,1×17		MN		[+]	**PF0278**	98,4×41×15	
2.7 V6 4x4	02/01→	127	173	AK		[+]	**PF0282**	149×58,1×17		MN		[+]	**PF0278**	98,4×41×15	
3.3 4x4	03/06→	173	235	AK		[+]	**PF0282**	149×58,1×17		MN		[+]	**PF0278**	98,4×41×15	
3.5	09/03→02/06	147	200	AK		[+]	**PF0282**	149×58,1×17		MN		[+]	**PF0278**	98,4×41×15	
3.5 4x4	09/03→02/06	147	200	AK		[+]	**PF0282**	149×58,1×17		MN		[+]	**PF0278**	98,4×41×15	
Santa Fe II (CM)															
2.0 CRDi	12/10→	110	150	MN		[+]	**PF0767**	156,8×60,7×17							
2.0 CRDi 4x4	12/10→	110	150	MN		[+]	**PF0767**	156,8×60,7×17							
2.2 CRDi	03/06→	102	139	MN		[+]	**PF0767**	156,8×60,7×17							
2.2 CRDi	03/06→	114	155	MN		[+]	**PF0767**	156,8×60,7×17							
2.2 CRDi	01/09→	145	197	MN		[+]	**PF0767**	156,8×60,7×17							
2.2 CRDi 4x4	03/06→	102	139	MN		[+]	**PF0767**	156,8×60,7×17							
2.2 CRDi 4x4	03/06→	114	155	MN		[+]	**PF0767**	156,8×60,7×17							

		KW	CV	SiS	i	W.i.	MAGNETI MARELLI	W×H×Th (mm)	Extra kit [Opt]	SiS	i	W.i.	MAGNETI MARELLI	W×H×Th (mm)	Extra kit [Opt]
HYUNDAI															
Santa Fe II (CM)															
2.2 CRDi 4x4	01/09 →	145	197	MN		[+]	**PF0767**	156,8×60,7×17							
2.2 CRDi GLS	03/06 →	110	150	MN		[+]	**PF0767**	156,8×60,7×17							
2.2 CRDi GLS 4x4	03/06 →	110	150	MN		[+]	**PF0767**	156,8×60,7×17							
2.4	11/10 →	128	174	MN		[+]	**PF0767**	156,8×60,7×17							
2.4 4x4	07/10 →	128	174	MN		[+]	**PF0767**	156,8×60,7×17							
2.7	08/04 →	129	175	MN		[+]	**PF0767**	156,8×60,7×17							
2.7	03/06 →	125	170	MN		[+]	**PF0767**	156,8×60,7×17							
2.7 4x4	03/06 →	125	170	MN		[+]	**PF0767**	156,8×60,7×17							
2.7 V6 GLS	03/06 →	139	189	MN		[+]	**PF0767**	156,8×60,7×17							
2.7 V6 GLS 4x4	03/06 →	139	189	MN		[+]	**PF0767**	156,8×60,7×17							
3.3	07/07 → 11/08	180	245	MN		[+]	**PF0767**	156,8×60,7×17							
3.3 Dynamic 4x4	03/06 →	173	235	MN		[+]	**PF0767**	156,8×60,7×17							
Santa Fe III															
2.4	09/12 →	141	192	MN		[+]	**PF0767**	156,8×60,7×17							
2.4	09/12 →	141	192	MN		[+]	**PF0767**	156,8×60,7×17							
2.0 CRDi	09/12 →	110	150	MN		[+]	**PF0767**	156,8×60,7×17							
2.0 CRDi	09/12 →	110	150	MN		[+]	**PF0767**	156,8×60,7×17							
2.2 CRDi	09/12 →	145	197	MN		[+]	**PF0767**	156,8×60,7×17							
2.2 CRDi	09/12 →	145	197	MN		[+]	**PF0767**	156,8×60,7×17							
Santamo															
2.0i 16V	00 →			ST		[+]	**PF0467**	137×53×17							
2.0i 16V	00 →			ST		[+]	**PF0468**	137×54,3×17							
S-Coupé (SLC)															
1.5 GS	03/90 → 12/92	57	78	AK		[+]	**PF0459**	127,5×49×15,5							
1.5 i	02/90 → 05/96	62	84	AK		[+]	**PF0459**	127,5×49×15,5							
1.5 i	04/92 → 05/96	65	88	AK		[+]	**PF0459**	127,5×49×15,5							
1.5 i Turbo	04/91 → 05/96	85	116	AK		[+]	**PF0459**	127,5×49×15,5							
Sonata															
1.8i GL - GLX	89 → 93			ST		[+]	**PF0467**	137×53×17							
1.8i GL - GLX	89 → 93			ST		[+]	**PF0468**	137×54,3×17							
2.0i GLS 16V	91 → 93			ST		[+]	**PF0467**	137×53×17							
2.0i GLS 16V	91 → 93			ST		[+]	**PF0468**	137×54,3×17							
2.4i 16V	91 → 93			ST		[+]	**PF0467**	137×53×17							
2.4i 16V	91 → 93			ST		[+]	**PF0468**	137×54,3×17							
3.0	89 → 93			ST		[+]	**PF0467**	137×53×17							
3.0	89 → 93			ST		[+]	**PF0468**	137×54,3×17							
Sonata III (Y-3)															
1.8 GLS	07/96 → 05/98	63	86	ST		[+]	**PF0467**	137×53×17							
1.8 i	05/93 → 06/98	72	98	ST		[+]	**PF0467**	137×53×17							
2.0	07/94 → 10/94	96	131	ST		[+]	**PF0467**	137×53×17							
2.0 i	06/94 → 08/96	77	105	ST		[+]	**PF0467**	137×53×17							

		KW	CV	SiS	i	W.i.	MAGNETI MARELLI	W×H×Th (mm)	Extra kit [Opt]	SiS	i	W.i.	MAGNETI MARELLI	W×H×Th (mm)	Extra kit [Opt]
HYUNDAI															
Sonata III (Y-3)															
2.0 i	08/96 → 06/98	70	95	ST		[+]	**PF0467**	137×53×17							
2.0 i 16V	05/93 → 06/98	102	139	ST		[+]	**PF0467**	137×53×17							
2.0 i 16V	06/96 → 06/98	92	125	ST		[+]	**PF0467**	137×53×17							
3.0 i V6	05/93 → 06/98	107	146	ST		[+]	**PF0467**	137×53×17							
Sonata IV (EF)															
2.0 16V	06/98 → 10/01	100	136	ST		[+]	**PF0467**	137×53×17		MN		[+]	**PF0278**	98,4×41×15	
2.0 16V	10/01 → 11/04	96	131	ST		[+]	**PF0467**	137×53×17		MN		[+]	**PF0278**	98,4×41×15	
2.0 16V	10/01 → 11/04	106	144	ST		[+]	**PF0467**	137×53×17		MN		[+]	**PF0278**	98,4×41×15	
2.0 CRDi Dynamic	10/01 → 11/04	103	140	ST		[+]	**PF0467**	137×53×17		MN		[+]	**PF0278**	98,4×41×15	
2.2 CRDi	06/02 → 11/04	110	150	ST		[+]	**PF0467**	137×53×17		MN		[+]	**PF0278**	98,4×41×15	
2.4	10/01 → 05/05	104	141	ST		[+]	**PF0467**	137×53×17		MN		[+]	**PF0278**	98,4×41×15	
2.4 16V	03/98 → 10/01	105	143	ST		[+]	**PF0467**	137×53×17		MN		[+]	**PF0278**	98,4×41×15	
2.5 i V6	08/98 → 09/01	127	173	ST		[+]	**PF0467**	137×53×17		MN		[+]	**PF0278**	98,4×41×15	
2.5 V6 24V	06/98 → 10/01	118	160	ST		[+]	**PF0467**	137×53×17		MN		[+]	**PF0278**	98,4×41×15	
2.7 i V6	10/01 → 05/05	132	180	ST		[+]	**PF0467**	137×53×17		MN		[+]	**PF0278**	98,4×41×15	
2.7 V6	10/01 → 11/04	127	173	ST		[+]	**PF0467**	137×53×17		MN		[+]	**PF0278**	98,4×41×15	
2.7 V6	11/02 → 11/04	129	175	ST		[+]	**PF0467**	137×53×17		MN		[+]	**PF0278**	98,4×41×15	
2.7 V6	10/01 → 11/04	123	167	ST		[+]	**PF0467**	137×53×17		MN		[+]	**PF0278**	98,4×41×15	
Sonata V (NF)															
2.0 CRDi	02/06 →	105	143	AK		[+]	**PF0277**	131,3×60,2×17,6		MN		[+]	**PF0278**	98,4×41×15	
2.0 CRDi	02/06 →	103	140	AK		[+]	**PF0277**	131,3×60,2×17,6		MN		[+]	**PF0278**	98,4×41×15	
2.0 CRDi	02/06 →	100	136	AK		[+]	**PF0277**	131,3×60,2×17,6		MN		[+]	**PF0278**	98,4×41×15	
2.0 CRDi	03/09 →	110	150	AK		[+]	**PF0277**	131,3×60,2×17,6		MN		[+]	**PF0278**	98,4×41×15	
2.0 VVTi GLS	05/05 →	106	144	AK		[+]	**PF0277**	131,3×60,2×17,6		MN		[+]	**PF0278**	98,4×41×15	
2.0 VVTi GLS	01/08 →	121	165	AK		[+]	**PF0277**	131,3×60,2×17,6		MN		[+]	**PF0278**	98,4×41×15	
2.2 CRDi GLS	02/06 →	110	150	AK		[+]	**PF0277**	131,3×60,2×17,6		MN		[+]	**PF0278**	98,4×41×15	
2.4	06/08 →	127	173	AK		[+]	**PF0277**	131,3×60,2×17,6		MN		[+]	**PF0278**	98,4×41×15	
2.4	01/05 →	119	162	AK		[+]	**PF0277**	131,3×60,2×17,6		MN		[+]	**PF0278**	98,4×41×15	
3.3	01/05 →	171	233	AK		[+]	**PF0277**	131,3×60,2×17,6		MN		[+]	**PF0278**	98,4×41×15	
3.3	01/08 →	184	250	AK		[+]	**PF0277**	131,3×60,2×17,6		MN		[+]	**PF0278**	98,4×41×15	
3.3	06/05 →	173	235	AK		[+]	**PF0277**	131,3×60,2×17,6		MN		[+]	**PF0278**	98,4×41×15	
Sonata VI (YF)															
2.0	01/09 →	110	150							AK	Europa	[+]	**PF0751**	99,9×41×15,5	
2.4	01/09 →	131	178							AK	Europa	[+]	**PF0751**	99,9×41×15,5	
2.4 GDI	01/09 →	148	201							AK	Europa	[+]	**PF0751**	99,9×41×15,5	
Sonica															
2.0i 16V GLSA - GLE - GLX	93 → 98			ST		[+]	**PF0467**	137×53×17							
2.0i 16V GLSA - GLE - GLX	93 → 98			ST		[+]	**PF0468**	137×54,3×17							

		KW	CV												
				SiS	i	W.i.	MAGNETI MARELLI	W×H×Th (mm)	Extra kit [Opt]	SiS	i	W.i.	MAGNETI MARELLI	W×H×Th (mm)	Extra kit [Opt]
HYUNDAI															
Sonica II															
2.0i 16V	11/98 → 01			ST	(G4JP)	[+]	**PF0468**	137×54,3×17		MN		[+]	**PF0278**	98,4×41×15	
2.5i V6 24V	11/98 → 09/01			ST	(G6BV)	[+]	**PF0468**	137×54,3×17		MN		[+]	**PF0278**	98,4×41×15	
2.7i V6 24V	09/01 → 01			ST	(G6BA)	[+]	**PF0468**	137×54,3×17		MN		[+]	**PF0278**	98,4×41×15	
Sonica III															
2.0i	01 → 04			AK		[+]	**PF0277**	131,3×60,2×17,6							
2.7i	01 → 04			AK		[+]	**PF0277**	131,3×60,2×17,6							
Starex (H1)															
2.4	06/97 →	82	112	MN		[+]	**PF0279**	147×53,5×16,5							
2.4	06/97 →	82	112	AK		[+]	**PF0282**	149×58,1×17							
2.4	02/03 → 04/04	101	137	MN		[+]	**PF0279**	147×53,5×16,5							
2.4	02/03 → 04/04	101	137	AK		[+]	**PF0282**	149×58,1×17							
2.4 4WD	02/98 →	82	112	MN		[+]	**PF0279**	147×53,5×16,5							
2.4 4WD	02/98 →	82	112	AK		[+]	**PF0282**	149×58,1×17							
2.5	02/03 → 04/04	103	140	MN		[+]	**PF0279**	147×53,5×16,5							
2.5	02/03 → 04/04	103	140	AK		[+]	**PF0282**	149×58,1×17							
2.5 CRDi	12/02 →	103	140	MN		[+]	**PF0279**	147×53,5×16,5							
2.5 CRDi	12/02 →	103	140	AK		[+]	**PF0282**	149×58,1×17							
2.5 CRDi 4x4	12/02 →	103	140	MN		[+]	**PF0279**	147×53,5×16,5							
2.5 CRDi 4x4	12/02 →	103	140	AK		[+]	**PF0282**	149×58,1×17							
2.5 D	10/97 → 04/04	62	84	MN		[+]	**PF0279**	147×53,5×16,5							
2.5 D	10/97 → 04/04	62	84	AK		[+]	**PF0282**	149×58,1×17							
2.5 TCi	10/97 → 04/04	73	99	MN		[+]	**PF0279**	147×53,5×16,5							
2.5 TCi	10/97 → 04/04	73	99	AK		[+]	**PF0282**	149×58,1×17							
2.5 TCi	05/04 →	74	101	MN		[+]	**PF0279**	147×53,5×16,5							
2.5 TCi	05/04 →	74	101	AK		[+]	**PF0282**	149×58,1×17							
2.5 TD	06/97 →	59	80	MN		[+]	**PF0279**	147×53,5×16,5							
2.5 TD	06/97 →	59	80	AK		[+]	**PF0282**	149×58,1×17							
2.5 TD 4WD	02/98 →	59	80	MN		[+]	**PF0279**	147×53,5×16,5							
2.5 TD 4WD	02/98 →	59	80	AK		[+]	**PF0282**	149×58,1×17							
2.6 TD	10/97 → 04/04	63	86	MN		[+]	**PF0279**	147×53,5×16,5							
2.6 TD	10/97 → 04/04	63	86	AK		[+]	**PF0282**	149×58,1×17							
Terracan (HP)															
2.5 D	06/01 → 10/03	74	101	MN		[+]	**PF0472**	148,8×58×15,8							
2.5 D	06/01 → 10/03	59	80	MN		[+]	**PF0472**	148,8×58×15,8							
2.5 TD	12/01 →	74	101	MN		[+]	**PF0472**	148,8×58×15,8							
2.9 CRDi	11/01 → 07/03	110	150	MN		[+]	**PF0472**	148,8×58×15,8							
2.9 CRDi 4WD	12/01 →	110	150	MN		[+]	**PF0472**	148,8×58×15,8							
2.9 CRDi 4WD	11/03 →	120	163	MN		[+]	**PF0472**	148,8×58×15,8							
3.5 i V6 4WD	12/01 →	147	200	MN		[+]	**PF0472**	148,8×58×15,8							
3.5 i V6 4WD	12/01 →	143	194	MN		[+]	**PF0472**	148,8×58×15,8							

		KW	CV	SiS	i	W.i.	MAGNETI MARELLI	W×H×Th (mm)	Extra kit [Opt]	SiS	i	W.i.	MAGNETI MARELLI	W×H×Th (mm)	Extra kit [Opt]
HYUNDAI															
Tiburon Coupé (U.S.A.)															
1.8 16V	01/97 → 12/97	97	132	AK		[+]	PF0277	131,3×60,2×17,6							
2.0 16V	01/97 → 12/97	100	136	AK		[+]	PF0277	131,3×60,2×17,6							
2.0 16V	01/97 → 12/06	100	136	AK		[+]	PF0277	131,3×60,2×17,6							
2.0 16V	01/98 → 12/01	104	141	AK		[+]	PF0277	131,3×60,2×17,6							
2.7 24V	01/03 → 12/06	127	173	AK		[+]	PF0277	131,3×60,2×17,6							
Trajet (FO)															
2.0	03/00 →	100	136	AK		[+]	PF0282	149×58,1×17		MN		[+]	PF0278	98,4×41×15	
2.0	01/04 →	103	140	AK		[+]	PF0282	149×58,1×17		MN		[+]	PF0278	98,4×41×15	
2.0	11/03 →	104	141	AK		[+]	PF0282	149×58,1×17		MN		[+]	PF0278	98,4×41×15	
2.0 CRDi	04/01 →	83	113	AK		[+]	PF0282	149×58,1×17		MN		[+]	PF0278	98,4×41×15	
2.0 CRDi	08/05 →	92	125	AK		[+]	PF0282	149×58,1×17		MN		[+]	PF0278	98,4×41×15	
2.7 V6	09/00 →	127	173	AK		[+]	PF0282	149×58,1×17		MN		[+]	PF0278	98,4×41×15	
Tucson (JM)															
2.0	08/04 →	104	141	AK		[+]	PF0277	131,3×60,2×17,6		MN		[+]	PF0278	98,4×41×15	
2.0 All-wheel Drive	08/04 →	104	141	AK		[+]	PF0277	131,3×60,2×17,6		MN		[+]	PF0278	98,4×41×15	
2.0 CRDi	08/04 →	83	113	AK		[+]	PF0277	131,3×60,2×17,6		MN		[+]	PF0278	98,4×41×15	
2.0 CRDi	01/06 →	103	140	AK		[+]	PF0277	131,3×60,2×17,6		MN		[+]	PF0278	98,4×41×15	
2.0 CRDi	01/06 →	100	136	AK		[+]	PF0277	131,3×60,2×17,6		MN		[+]	PF0278	98,4×41×15	
2.0 CRDi	01/07 →	88	120	AK		[+]	PF0277	131,3×60,2×17,6		MN		[+]	PF0278	98,4×41×15	
2.0 CRDi	01/09 →	110	150	AK		[+]	PF0277	131,3×60,2×17,6		MN		[+]	PF0278	98,4×41×15	
2.0 CRDi All-wheel Drive	08/04 →	83	113	AK		[+]	PF0277	131,3×60,2×17,6		MN		[+]	PF0278	98,4×41×15	
2.0 CRDi All-wheel Drive	01/06 →	103	140	AK		[+]	PF0277	131,3×60,2×17,6		MN		[+]	PF0278	98,4×41×15	
2.0 CRDi All-wheel Drive	01/06 →	100	136	AK		[+]	PF0277	131,3×60,2×17,6		MN		[+]	PF0278	98,4×41×15	
2.0 CRDi All-wheel Drive	01/07 →	88	120	AK		[+]	PF0277	131,3×60,2×17,6		MN		[+]	PF0278	98,4×41×15	
2.0 CRDi All-wheel Drive	01/09 →	110	150	AK		[+]	PF0277	131,3×60,2×17,6		MN		[+]	PF0278	98,4×41×15	
2.7 All-wheel Drive	08/04 →	129	175	AK		[+]	PF0277	131,3×60,2×17,6		MN		[+]	PF0278	98,4×41×15	
Veloster															
1.6	03/11 →	103	140	AK		[+]	PF0749	132,9×60×17,5		AK	Europa	[+]	PF0751	99,9×41×15,5	
1.6	06/11 →	94	128	AK		[+]	PF0749	132,9×60×17,5		AK	Europa	[+]	PF0751	99,9×41×15,5	
1.6	10/11 →	95	129	AK		[+]	PF0749	132,9×60×17,5		AK	Europa	[+]	PF0751	99,9×41×15,5	
1.6 T-GDI	10/12 →	137	186	AK		[+]	PF0749	132,9×60×17,5		AK	Europa	[+]	PF0751	99,9×41×15,5	
1.6 T-GDI	08/12 →	150	204	AK		[+]	PF0749	132,9×60×17,5		AK	Europa	[+]	PF0751	99,9×41×15,5	
XG (XG)															
25	12/98 →	120	163	AK		[+]	PF0282	149×58,1×17		MN		[+]	PF0278	98,4×41×15	
3.0	09/99 → 09/03	145	197	AK		[+]	PF0282	149×58,1×17		MN		[+]	PF0278	98,4×41×15	
30/300	12/98 →	138	188	AK		[+]	PF0282	149×58,1×17		MN		[+]	PF0278	98,4×41×15	

		KW	CV	SiS	i	W.i.	MAGNETI MARELLI	W×H×Th (mm)	Extra kit [Opt]	SiS	i	W.i.	MAGNETI MARELLI	W×H×Th (mm)	Extra kit [Opt]
INFINITI															
EX															
30d	04/10 →	175	238	ST		[+]	**PF0683**	157,1×58,3×18		AK		[+]	**PF0473**	105,5×38,2×13,7	
37	10/08 →	228	310	ST		[+]	**PF0683**	157,1×58,3×18		AK		[+]	**PF0473**	105,5×38,2×13,7	
37	09/10 →	235	320	ST		[+]	**PF0683**	157,1×58,3×18		AK		[+]	**PF0473**	105,5×38,2×13,7	
FX															
3.5	02/03 →	206	280	ST		[+]	**PF0683**	157,1×58,3×18		AK		[+]	**PF0350**	105,5×38,2×14,2	
30d	04/10 →	175	238	ST		[+]	**PF0683**	157,1×58,3×18		AK		[+]	**PF0473**	105,5×38,2×13,7	
35	01/03 →	206	280	ST		[+]	**PF0683**	157,1×58,3×18		AK		[+]	**PF0350**	105,5×38,2×14,2	
37	10/08 →	235	320	ST		[+]	**PF0683**	157,1×58,3×18		AK		[+]	**PF0473**	105,5×38,2×13,7	
37	09/10 →	235	320	ST		[+]	**PF0683**	157,1×58,3×18		AK		[+]	**PF0473**	105,5×38,2×13,7	
4.5	02/03 →	232	316	ST		[+]	**PF0683**	157,1×58,3×18		AK		[+]	**PF0350**	105,5×38,2×14,2	
45	01/03 →	232	316	ST		[+]	**PF0683**	157,1×58,3×18		AK		[+]	**PF0350**	105,5×38,2×14,2	
M35															
3.5 Luxury	01/05 →	206	280	ST		[+]	**PF0683**	157,1×58,3×18							
3.5 Luxury All-wheel Drive	01/05 →	206	280	ST		[+]	**PF0683**	157,1×58,3×18							
4.5	05 →			ST		[+]	**PF0683**	157,1×58,3×18							
Q45															
4.1	01/93 →	205	278	ST		[+]	**PF0683**	157,1×58,3×18							
4.5 i	07/93 → 12/96	207	282	ST		[+]	**PF0683**	157,1×58,3×18							
INNOCENTI															
Elba (146)															
1.3	08/91 →	49	67	ATE	(146CW)	[+]	**PF0807**	151,5×49×17,8							
1.4 i.e.	09/94 → 12/96	49	67	ATE	(146EN, 146EQ)	[+]	**PF0807**	151,5×49×17,8							
1.5 i.e.	08/92 → 09/94	55	75	ATE	(146C9)	[+]	**PF0807**	151,5×49×17,8							
1.6 i.e.	09/94 → 12/96	55	75	ATE	(146EO, 146ER)	[+]	**PF0807**	151,5×49×17,8							
1.7 D	08/91 → 12/96	42	57	ATE	(146DI, 146EI)	[+]	**PF0807**	151,5×49×17,8							
Mille															
1.0	96 →			BD		[+]	**PF0212**	108,8×47,4×18	OK028						
1.0 i.e.	94 →			ATE		[+]	**PF0807**	151,5×49×17,8							
1.1	96 →			BD		[+]	**PF0212**	108,8×47,4×18	OK028						
1.3	96 →			ATE		[+]	**PF0807**	151,5×49×17,8							
1.4 i.e.	94 →			ATE		[+]	**PF0807**	151,5×49×17,8							
1.5	96 →			ATE		[+]	**PF0807**	151,5×49×17,8							
1.6 D	96 →			LG		[+]	**PF0105**	104×66,4×17	OK030						
1.7 D	96 →			LG		[+]	**PF0105**	104×66,4×17	OK030						

		KW	CV	SiS	i	W.i.	MAGNETI MARELLI	W×H×Th (mm)	Extra kit [Opt]	SiS	i	W.i.	MAGNETI MARELLI	W×H×Th (mm)	Extra kit [Opt]
ISUZU															
Bighorn															
3.1 TD	93→									ST		[+]	**PF0497**	109,5×42,5×16	
D-Max (8DH)															
2.4 4x4	05/02→	94	128	ST	←8/2009	[+]	**PF0802**	167,4×54,1×17		ST		[+]	**PF0497**	109,5×42,5×16	
2.4 4x4	05/02→	94	128	AK		[+]	**PF0449**	151,8×60,8×17,4		ST		[+]	**PF0497**	109,5×42,5×16	
2.5 D	10/02→	74	101	ST	←8/2009	[+]	**PF0802**	167,4×54,1×17		ST		[+]	**PF0497**	109,5×42,5×16	
2.5 D	10/02→	74	101	AK		[+]	**PF0449**	151,8×60,8×17,4		ST		[+]	**PF0497**	109,5×42,5×16	
2.5 D 4x4	05/02→	74	101	ST	←8/2009	[+]	**PF0802**	167,4×54,1×17		ST		[+]	**PF0497**	109,5×42,5×16	
2.5 D 4x4	05/02→	74	101	AK		[+]	**PF0449**	151,8×60,8×17,4		ST		[+]	**PF0497**	109,5×42,5×16	
2.5 DiTD	10/06→	100	136	ST	←8/2009	[+]	**PF0802**	167,4×54,1×17		ST		[+]	**PF0497**	109,5×42,5×16	
2.5 DiTD	10/06→	100	136	AK		[+]	**PF0449**	151,8×60,8×17,4		ST		[+]	**PF0497**	109,5×42,5×16	
2.5 DiTD 4x4	01/07→	100	136	ST	←8/2009	[+]	**PF0802**	167,4×54,1×17		ST		[+]	**PF0497**	109,5×42,5×16	
2.5 DiTD 4x4	01/07→	100	136	AK		[+]	**PF0449**	151,8×60,8×17,4		ST		[+]	**PF0497**	109,5×42,5×16	
3.0 D	01/07→	120	163	ST	←8/2009	[+]	**PF0802**	167,4×54,1×17		ST		[+]	**PF0497**	109,5×42,5×16	
3.0 D	01/07→	120	163	AK		[+]	**PF0449**	151,8×60,8×17,4		ST		[+]	**PF0497**	109,5×42,5×16	
3.0 D 4x4	01/07→	120	163	ST	←8/2009	[+]	**PF0802**	167,4×54,1×17		ST		[+]	**PF0497**	109,5×42,5×16	
3.0 D 4x4	01/07→	120	163	AK		[+]	**PF0449**	151,8×60,8×17,4		ST		[+]	**PF0497**	109,5×42,5×16	
3.0 DiTD	10/02→	96	131	ST	←8/2009	[+]	**PF0802**	167,4×54,1×17		ST		[+]	**PF0497**	109,5×42,5×16	
3.0 DiTD	10/02→	96	131	AK		[+]	**PF0449**	151,8×60,8×17,4		ST		[+]	**PF0497**	109,5×42,5×16	
3.0 DiTD 4x4	05/02→	96	131	ST	←8/2009	[+]	**PF0802**	167,4×54,1×17		ST		[+]	**PF0497**	109,5×42,5×16	
3.0 DiTD 4x4	05/02→	96	131	AK		[+]	**PF0449**	151,8×60,8×17,4		ST		[+]	**PF0497**	109,5×42,5×16	
3.5 V6 24V 4x4	05/02→	147	200	ST	←8/2009	[+]	**PF0802**	167,4×54,1×17		ST		[+]	**PF0497**	109,5×42,5×16	
3.5 V6 24V 4x4	05/02→	147	200	AK		[+]	**PF0449**	151,8×60,8×17,4		ST		[+]	**PF0497**	109,5×42,5×16	
D-Max															
2.5 Ddi	06/12→	120	163	AK		[+]	**PF0449**	151,8×60,8×17,4							
3.0 D	06/12→	130	177	AK		[+]	**PF0449**	151,8×60,8×17,4							
MU															
3.1 TD 4WD	94→									ST		[+]	**PF0497**	109,5×42,5×16	
Rodeo															
3.2i V6 24V	93→									ST		[+]	**PF0497**	109,5×42,5×16	
Rodeo															
2.5 4x4	01/05→	100	136	ST		[+]	**PF0449**	151,8×60,8×17,4							
Trooper IV (UB)															
2.6 4x4	08/91→04/96	85	116							ST		[+]	**PF0497**	109,5×42,5×16	
3.1 TD	08/91→07/98	84	114							ST		[+]	**PF0497**	109,5×42,5×16	
3.2	08/91→07/98	130	177							ST		[+]	**PF0497**	109,5×42,5×16	
Trooper IV Open (US)															
2.6 4x4	08/91→04/96	85	116							ST		[+]	**PF0497**	109,5×42,5×16	
3.1 TD	08/91→07/98	84	114							ST		[+]	**PF0497**	109,5×42,5×16	
3.2	08/91→07/98	130	177							ST		[+]	**PF0497**	109,5×42,5×16	
Trooper V															
3.0 DTI	04/00→	118	160							ST		[+]	**PF0497**	109,5×42,5×16	
3.5 V6 24V	04/00→	158	215							ST		[+]	**PF0497**	109,5×42,5×16	

		KW	CV	SiS	i	W.i.	MAGNETI MARELLI	W×H×Th (mm)	Extra kit [Opt]	SiS	i	W.i.	MAGNETI MARELLI	W×H×Th (mm)	Extra kit [Opt]
ISUZU															
Trooper V Open Off-Road															
3.0 DTI	04/00 →	118	160							ST		[+]	**PF0497**	109,5×42,5×16	
3.5 V6 24V	04/00 →	158	215							ST		[+]	**PF0497**	109,5×42,5×16	
IVECO															
Daily 30 90 →															
30.8	91 →			BR		[+]	**PF0475**	109,5×73×18,3							
30.8	96 →			BR		[+]	**PF0476**	109,5×73×18,3							
30.8 V	09/98 →			BR		[+]	**PF0476**	109,5×73×18,3							
30.8 C	09/98 →			BR		[+]	**PF0476**	109,5×73×18,3							
30.8 2.4D	96 →			BR		[-]	**PF0283**	164,6×66,5×20	OK031						
30.9	91 →			BR		[+]	**PF0475**	109,5×73×18,3							
30.10	96 →			BR		[-]	**PF0283**	164,6×66,5×20	OK031	BR		[-]	**PF0283**	164,6×66,5×20	OK031
30.10 C	01/97 →			BR		[+]	**PF0476**	109,5×73×18,3							
30.10 V	01/97 →			BR		[+]	**PF0476**	109,5×73×18,3							
Daily 35 90 →															
35.8	96 →			BR		[-]	**PF0283**	164,6×66,5×20	OK031	BR		[-]	**PF0283**	164,6×66,5×20	OK031
35.10 2.4D	96 →			BR		[-]	**PF0283**	164,6×66,5×20	OK031	BR		[-]	**PF0283**	164,6×66,5×20	OK031
35.12 2.5D	96 →			BR		[-]	**PF0283**	164,6×66,5×20	OK031	BR		[-]	**PF0283**	164,6×66,5×20	OK031
Daily 40 90 →															
40.10	96 →			BR		[-]	**PF0283**	164,6×66,5×20	OK031	BR		[-]	**PF0283**	164,6×66,5×20	OK031
Daily 49 90 →															
49.10	96 →			BR		[-]	**PF0283**	164,6×66,5×20	OK031	BR		[-]	**PF0283**	164,6×66,5×20	OK031
49.12	96 →			BR		[-]	**PF0283**	164,6×66,5×20	OK031	BR		[-]	**PF0283**	164,6×66,5×20	OK031
Daily 50/59 90 →															
50.12 T.	92 → 05/96			PT		[-]	**PF0547**	174,3×69,3×20							
50 C 13	03/00 →			BR		[-]	**PF0283**	164,6×66,5×20	OK031						
59.12 2.5D	96 →			BR		[-]	**PF0283**	164,6×66,5×20	OK031						
Daily C65															
C 65 11	00 →			BR		[-]	**PF0477**	164,8×68×20		BR		[-]	**PF0477**	164,8×68×20	
C 65 13	00 →			BR		[-]	**PF0477**	164,8×68×20		BR		[-]	**PF0477**	164,8×68×20	
C 65 15	00 →			BR		[-]	**PF0477**	164,8×68×20		BR		[-]	**PF0477**	164,8×68×20	
Daily II															
29 L 9 V	05/99 →			BR		[-]	**PF0526**	164,6×66,5×17	OK060						
29 L 11 V	05/99 →			BR		[-]	**PF0526**	164,6×66,5×17	OK060						
29 L 11	05/99 →			BR		[-]	**PF0526**	164,6×66,5×17	OK060						
City 35.9	00 →			BR		[-]	**PF0526**	164,6×66,5×17	OK060	BR		[o]	**PF0434**	109,5×63,8×20	OK060
City 35.11	00 →			BR		[-]	**PF0526**	164,6×66,5×17	OK060	BR		[o]	**PF0434**	109,5×63,8×20	OK060
City 35.13	00 →			BR		[-]	**PF0526**	164,6×66,5×17	OK060	BR		[o]	**PF0434**	109,5×63,8×20	OK060
S 35 9 V	05/99 →			BR		[-]	**PF0526**	164,6×66,5×17	OK060	BR		[o]	**PF0434**	109,5×63,8×20	OK060
S 35 9	05/99 →			BR		[-]	**PF0526**	164,6×66,5×17	OK060	BR		[o]	**PF0434**	109,5×63,8×20	OK060
S 35 11 V	05/99 →			BR		[-]	**PF0526**	164,6×66,5×17	OK060	BR		[o]	**PF0434**	109,5×63,8×20	OK060
S 35 11	05/99 →			BR		[-]	**PF0526**	164,6×66,5×17	OK060	BR		[o]	**PF0434**	109,5×63,8×20	OK060
S 35 13 V	05/99 →			BR		[-]	**PF0526**	164,6×66,5×17	OK060	BR		[o]	**PF0434**	109,5×63,8×20	OK060
S 35 13	05/99 →			BR		[-]	**PF0526**	164,6×66,5×17	OK060	BR		[o]	**PF0434**	109,5×63,8×20	OK060

		KW	CV													
				SiS	i	W.i.	MAGNETI MARELLI	W×H×Th (mm)	Extra kit [Opt]	SiS	i	W.i.	MAGNETI MARELLI	W×H×Th (mm)	Extra kit [Opt]
IVECO															
Daily III/IV															
29L	06→			BR		[o]	**PF0649**	163,2×67,1×20	OK060/ OK050/ OK090	BR		[-]	**PF0284**	141,1×72,5×20,7	OK060/ OK049
35S	06→			BR		[o]	**PF0649**	163,2×67,1×20	OK060/ OK050/ OK090	BR		[-]	**PF0284**	141,1×72,5×20,7	OK060/ OK049
35C	06→			BR		[o]	**PF0649**	163,2×67,1×20	OK060/ OK050/ OK090	BR		[-]	**PF0284**	141,1×72,5×20,7	OK060/ OK049
50C	06→			BR		[o]	**PF0649**	163,2×67,1×20	OK060/ OK050/ OK090	BR		[-]	**PF0284**	141,1×72,5×20,7	OK060/ OK049
50C15 3.0	06→			PT		[-]	**PF0530**	174,6×85,3×22							
50C18 3.0	06→			PT		[-]	**PF0530**	174,6×85,3×22							
60C	06→			BR		[o]	**PF0649**	163,2×67,1×20	OK060/ OK050/ OK090	BR		[-]	**PF0284**	141,1×72,5×20,7	OK060/ OK049
60C15 3.0	06→			PT		[-]	**PF0530**	174,6×85,3×22							
60C18 3.0	06→			PT		[-]	**PF0530**	174,6×85,3×22							
65C15 3.0	06→			PT		[-]	**PF0530**	174,6×85,3×22							
65C18 3.0	06→			PT		[-]	**PF0530**	174,6×85,3×22							
Daily V Promiscuo															
29L11 V, 35C11 V, 35S11 V, 40C11 V	09/11→	78	106	BR		[o]	**PF0649**	163,2×67,1×20	OK060/ OK050/ OK090	BR		[-]	**PF0284**	141,1×72,5×20,7	OK060/ OK049
29L13 V, 35C13 V, 35S13 V, 40C13 V, 40S13 V	09/11→	93	126	BR		[o]	**PF0649**	163,2×67,1×20	OK060/ OK050/ OK090	BR		[-]	**PF0284**	141,1×72,5×20,7	OK060/ OK049
29L15 V, 35C15L V, 40C15L V, 50C15L V	09/11→	107	146	BR		[o]	**PF0649**	163,2×67,1×20	OK060/ OK050/ OK090	BR		[-]	**PF0284**	141,1×72,5×20,7	OK060/ OK049
35C15 V, 40C15 V	09/11→	107	146	BR		[o]	**PF0649**	163,2×67,1×20	OK060/ OK050/ OK090	BR		[-]	**PF0284**	141,1×72,5×20,7	OK060/ OK049
35C17 SV	09/11→	125	170	BR		[o]	**PF0649**	163,2×67,1×20	OK060/ OK050/ OK090	BR		[-]	**PF0284**	141,1×72,5×20,7	OK060/ OK049

		KW	CV	SiS	i	W.i.	MAGNETI MARELLI	W×H×Th (mm)	Extra kit [Opt]	SiS	i	W.i.	MAGNETI MARELLI	W×H×Th (mm)	Extra kit [Opt]
IVECO															
Daily V Promiscuo															
35C21 V, 35S21 V, 40C21 V, 45C21 V, 50C21 V	09/11→	150	204	BR		[o]	**PF0649**	163,2×67,1×20	OK060/ OK050/ OK090	BR		[-]	**PF0284**	141,1×72,5×20,7	OK060/ OK049
Daily V Pianale piatto/Telaio															
26L11, 26L11D, 35C11D, 35S11, 40C11	09/11→	78	106	BR		[o]	**PF0649**	163,2×67,1×20	OK060/ OK050/ OK090	BR		[-]	**PF0284**	141,1×72,5×20,7	OK060/ OK049
29L13, 29L13D, 35C13D, 40C13	09/11→	93	126	BR		[o]	**PF0649**	163,2×67,1×20	OK060/ OK050/ OK090	BR		[-]	**PF0284**	141,1×72,5×20,7	OK060/ OK049
35C15, 35C15D, 35S15, 40C15, 45C15, 50C15, 60C15, 70C15	09/11→	107	146	BR		[o]	**PF0649**	163,2×67,1×20	OK060/ OK050/ OK090	BR		[-]	**PF0284**	141,1×72,5×20,7	OK060/ OK049
35C17, 35C17D, 35S17, 40C17, 45C17, 50C17, 60C17, 70C17	09/11→	125	170	BR		[o]	**PF0649**	163,2×67,1×20	OK060/ OK050/ OK090	BR		[-]	**PF0284**	141,1×72,5×20,7	OK060/ OK049
35C21, 35S21, 40C21, 45C21, 50C21, 60C21, 70C21	09/11→	150	205	BR		[o]	**PF0649**	163,2×67,1×20	OK060/ OK050/ OK090	BR		[-]	**PF0284**	141,1×72,5×20,7	OK060/ OK049
Daily V Ribaltabile															
35C11K, 35S11DKP	09/11→	78	106	BR		[o]	**PF0649**	163,2×67,1×20	OK060/ OK050/ OK090	BR		[-]	**PF0284**	141,1×72,5×20,7	OK060/ OK049
35C13K, 35C13DKP	09/11→	93	126	BR		[o]	**PF0649**	163,2×67,1×20	OK060/ OK050/ OK090	BR		[-]	**PF0284**	141,1×72,5×20,7	OK060/ OK049
35C15K, 35S15DKP, 50C15K, 60C15K, 65C15DK, 70C15K	09/11→	107	146	BR		[o]	**PF0649**	163,2×67,1×20	OK060/ OK050/ OK090	BR		[-]	**PF0284**	141,1×72,5×20,7	OK060/ OK049

		KW	CV													
				SiS	i	W.i.	MAGNETI MARELLI	W×H×Th (mm)	Extra kit [Opt]	SiS	i	W.i.	MAGNETI MARELLI	W×H×Th (mm)	Extra kit [Opt]
IVECO															
Daily V Ribaltabile															
35C17K, 35S17DKP, 50C17K, 65C17DK 70C17K	09/11→	125	170	BR		[o]	**PF0649**	163,2×67,1×20	OK060/ OK050/ OK090	BR		[-]	**PF0284**	141,1×72,5×20,7	OK060/ OK049
35S21DKP	09/11→	150	205	BR		[o]	**PF0649**	163,2×67,1×20	OK060/ OK050/ OK090	BR		[-]	**PF0284**	141,1×72,5×20,7	OK060/ OK049
Eurocargo															
60	04/91→			PT		[+]	**PF0530**	174,6×85,3×22		PT		[+]	**PF0530**	174,6×85,3×22	
65	04/91→			PT		[+]	**PF0530**	174,6×85,3×22		PT		[+]	**PF0530**	174,6×85,3×22	
75	04/91→			PT		[+]	**PF0530**	174,6×85,3×22		PT		[+]	**PF0530**	174,6×85,3×22	
Grinta 59															
59.12	90→			PT		[+]	**PF0546**	174,3×69,3×20							
59.12	90→			PT		[+]	**PF0547**	174,3×69,3×20							
JAGUAR															
Daimler															
4.0										ATE			**PF0242**	123,1×43,1×17	
F-Type															
3.0	10/12→	250	340	ATE		[o]	**PF0823**	155,2×75,1×18,8							
3.0	10/12→	280	381	ATE		[o]	**PF0823**	155,2×75,1×18,8							
F-Type Cabriolet															
3.0	10/12→	250	340	ATE		[o]	**PF0823**	155,2×75,1×18,8							
3.0	10/12→	280	381	ATE		[o]	**PF0823**	155,2×75,1×18,8							
F-Type Coupé															
3.0	10/13→	250	340	ATE		[o]	**PF0823**	155,2×75,1×18,8							
3.0	10/13→	280	381	ATE		[o]	**PF0823**	155,2×75,1×18,8							
Sovereign															
2.9										ATE			**PF0242**	123,1×43,1×17	
3.2										ATE			**PF0242**	123,1×43,1×17	
4.0										ATE			**PF0242**	123,1×43,1×17	
S-Type (CCX)															
R 4,2 V8	04/02→	291	396	BR			**PF0555**	109,7×69,3×15							
XF (_J05_, CC9)															
2.0		177	241							ATE			**PF0243**	123,1×52×16,4	
2.0	06/12→	177	241	ATE	tel. N52048→	[o]	**PF0824**	155,2×75,1×18,8		ATE			**PF0243**	123,1×52×16,4	
2.2 D		140	190							ATE			**PF0243**	123,1×52×16,4	
2.2 D	05/11→	140	190	ATE	tel. N52048→	[o]	**PF0824**	155,2×75,1×18,8		ATE			**PF0243**	123,1×52×16,4	
2.2 D		147	200							ATE			**PF0243**	123,1×52×16,4	
2.2 D	03/12→	147	200	ATE	tel. N52048→	[o]	**PF0824**	155,2×75,1×18,8		ATE			**PF0243**	123,1×52×16,4	

		KW	CV	SiS	i	W.i.	MAGNETI MARELLI	W×H×Th (mm)	Extra kit [Opt]	SiS	i	W.i.	MAGNETI MARELLI	W×H×Th (mm)	Extra kit [Opt]
JAGUAR															
XF (_J05_, CC9)															
2.7 D		152	207							ATE			**PF0243**	123,1×52×16,4	
2.7 D	03/08 →	152	207	ATE	tel. N52048 →	[o]	**PF0824**	155,2×75,1×18,8		ATE			**PF0243**	123,1×52×16,4	
3.0		175	238							ATE			**PF0243**	123,1×52×16,4	
3.0	03/08 →	175	238	ATE	tel. N52048 →	[o]	**PF0824**	155,2×75,1×18,8		ATE			**PF0243**	123,1×52×16,4	
3.0		250	340							ATE			**PF0243**	123,1×52×16,4	
3.0	03/12 →	250	340	ATE	tel. N52048 →	[o]	**PF0824**	155,2×75,1×18,8		ATE			**PF0243**	123,1×52×16,4	
3.0 4x4		250	340							ATE			**PF0243**	123,1×52×16,4	
3.0 4x4	10/12 →	250	340	ATE	tel. N52048 →	[o]	**PF0824**	155,2×75,1×18,8		ATE			**PF0243**	123,1×52×16,4	
3.0 D		155	211							ATE			**PF0243**	123,1×52×16,4	
3.0 D	03/09 →	155	211	ATE	tel. N52048 →	[o]	**PF0824**	155,2×75,1×18,8		ATE			**PF0243**	123,1×52×16,4	
3.0 D 4x4		177	241							ATE			**PF0243**	123,1×52×16,4	
3.0 D 4x4	03/12 →	177	241	ATE	tel. N52048 →	[o]	**PF0824**	155,2×75,1×18,8		ATE			**PF0243**	123,1×52×16,4	
3.0 D		177	241							ATE			**PF0243**	123,1×52×16,4	
3.0 D	03/09 →	177	241	ATE	tel. N52048 →	[o]	**PF0824**	155,2×75,1×18,8		ATE			**PF0243**	123,1×52×16,4	
3.0 D		202	275							ATE			**PF0243**	123,1×52×16,4	
3.0 D	03/09 →	202	275	ATE	tel. N52048 →	[o]	**PF0824**	155,2×75,1×18,8		ATE			**PF0243**	123,1×52×16,4	
4.2		219	298							ATE			**PF0243**	123,1×52×16,4	
5.0		283	385							ATE			**PF0243**	123,1×52×16,4	
5.0 XFR-S		405	550							ATE			**PF0243**	123,1×52×16,4	
XF Sportbrake															
2.2 D		147	200							ATE			**PF0243**	123,1×52×16,4	
3.0 D		177	241							ATE			**PF0243**	123,1×52×16,4	
3.0 D		202	275							ATE			**PF0243**	123,1×52×16,4	
2.2 D		120	163							ATE			**PF0243**	123,1×52×16,4	
XJ (X35_)															
3.0	01/11 →	175	238	ATE			**PF0823**	155,2×75,1×18,8							
3.0	10/12 →	250	340	ATE			**PF0823**	155,2×75,1×18,8							
3.0	09/13 →	253	344	ATE			**PF0823**	155,2×75,1×18,8							
5.0	09/12 →	350	476	ATE			**PF0823**	155,2×75,1×18,8							
5.0	09/12 →	380	517	ATE			**PF0823**	155,2×75,1×18,8							
XJ6 Sovereign															
4.0	11/94 → 07/97			ATE		[+]	**PF0208**	140,1×48,4×16,5		ATE			**PF0242**	123,1×43,1×17	
XJ6 II															
2.7 D										ATE			**PF0243**	123,1×52×16,4	
3.0										ATE			**PF0243**	123,1×52×16,4	

		KW	CV	SiS	i	W.i.	MAGNETI MARELLI	W×H×Th (mm)	Extra kit [Opt]	SiS	i	W.i.	MAGNETI MARELLI	W×H×Th (mm)	Extra kit [Opt]
JAGUAR															
XJ8															
4.0 V8										ATE			**PF0242**	123,1×43,1×17	
XJ8 II															
3.5										ATE			**PF0243**	123,1×52×16,4	
4.2										ATE			**PF0243**	123,1×52×16,4	
XJ12															
5.3										ATE			**PF0242**	123,1×43,1×17	
XJR															
4.0										ATE			**PF0242**	123,1×43,1×17	
4.0	07/97 → 05/03			BR			**PF0555**	109,7×69,3×15		ATE			**PF0242**	123,1×43,1×17	
XJR Super Charged															
4.0	11/94 → 07/97			ATE			**PF0208**	140,1×48,4×16,5		ATE			**PF0242**	123,1×43,1×17	
XJS															
4.0										ATE			**PF0242**	123,1×43,1×17	
6.0 V12										ATE			**PF0242**	123,1×43,1×17	
6.0 V12	93 →			ATE		[+]	**PF0208**	140,1×48,4×16,5		ATE			**PF0242**	123,1×43,1×17	
XJS Coupé															
6.0	05/93 → 03/96			ATE			**PF0208**	140,1×48,4×16,5		ATE			**PF0242**	123,1×43,1×17	
XJSC cabriolet															
4.0	05/91 → 09/94	163	222	ATE			**PF0208**	140,1×48,4×16,5		ATE			**PF0242**	123,1×43,1×17	
4.0	07/94 → 03/96	171	233	ATE			**PF0208**	140,1×48,4×16,5		ATE			**PF0242**	123,1×43,1×17	
6.0	05/93 → 03/96	222	302	ATE			**PF0208**	140,1×48,4×16,5		ATE			**PF0242**	123,1×43,1×17	
XK Cabriolet															
3.6										ATE			**PF0243**	123,1×52×16,4	
XK8R															
4.0										ATE			**PF0242**	123,1×43,1×17	
XK 8 Coupé (QEV)															
4.2		219	298							ATE			**PF0243**	123,1×52×16,4	
R 4,2		291	396							ATE			**PF0243**	123,1×52×16,4	
XK 8 cabriolet (QDV)															
4.2		219	298							ATE			**PF0243**	123,1×52×16,4	
R 4,2		291	396							ATE			**PF0243**	123,1×52×16,4	
X-Type (CF1)															
2.0 D	07/03 → 10/05	96	130	BSC			**PF0266**	149×60,4×18,5	OK033	BSC			**PF0265**	116×50×16,8	OK012
2.0 D	07/03 → 10/05	96	130	BSC			**PF0266**	149×60,4×18,5	OK033	BSC	10/2004 →		**PF0267**	101,9×50,9×16,3	OK033/ OK040
2.0 V6	03/02 → 10/05	115	156	BSC			**PF0266**	149×60,4×18,5	OK033	BSC			**PF0265**	116×50×16,8	OK012
2.0 V6	03/02 → 10/05	115	156	BSC			**PF0266**	149×60,4×18,5	OK033	BSC	10/2004 →		**PF0267**	101,9×50,9×16,3	OK033/ OK040
2.2 D	10/05 →	110	150	BSC			**PF0266**	149×60,4×18,5	OK033	BSC			**PF0267**	101,9×50,9×16,3	OK033/ OK040
2.2 D	10/05 →	114	155	BSC			**PF0266**	149×60,4×18,5	OK033	BSC			**PF0267**	101,9×50,9×16,3	OK033/ OK040
2.2 D	01/07 →	107	146	BSC			**PF0266**	149×60,4×18,5	OK033	BSC			**PF0267**	101,9×50,9×16,3	OK033/ OK040

		KW	CV													
				SiS	i	W.i.	MAGNETI MARELLI	W×H×Th (mm)	Extra kit [Opt]	SiS	i	W.i.	MAGNETI MARELLI	W×H×Th (mm)	Extra kit [Opt]
JAGUAR															
X-Type (CF1)															
2.5 V6	06/01 →	144	196	BSC			**PF0266**	149×60,4×18,5	OK033	BSC			**PF0265**	116×50×16,8	OK012
2.5 V6	06/01 →	144	196	BSC			**PF0266**	149×60,4×18,5	OK033	BSC	10/2004 →		**PF0267**	101,9×50,9×16,3	OK033/ OK040
3.0 V6	06/01 →	169	230	BSC			**PF0266**	149×60,4×18,5	OK033	BSC			**PF0265**	116×50×16,8	OK012
3.0 V6	06/01 →	169	230	BSC			**PF0266**	149×60,4×18,5	OK033	BSC	10/2004 →		**PF0267**	101,9×50,9×16,3	OK033/ OK040
X-Type SW															
2.0 D	02/04 → 10/05	96	130	BSC			**PF0266**	149×60,4×18,5	OK033	BSC			**PF0267**	101,9×50,9×16,3	OK033/ OK040
2.0 V6	11/03 →	115	156	BSC			**PF0266**	149×60,4×18,5	OK033	BSC			**PF0267**	101,9×50,9×16,3	OK033/ OK040
2.2 D	10/05 →	110	150	BSC			**PF0266**	149×60,4×18,5	OK033	BSC			**PF0267**	101,9×50,9×16,3	OK033/ OK040
2.2 D	10/05 →	114	155	BSC			**PF0266**	149×60,4×18,5	OK033	BSC			**PF0267**	101,9×50,9×16,3	OK033/ OK040
2.2 D	01/07 →	107	146	BSC			**PF0266**	149×60,4×18,5	OK033	BSC			**PF0267**	101,9×50,9×16,3	OK033/ OK040
2.5	02/04 →	144	196	BSC			**PF0266**	149×60,4×18,5	OK033	BSC			**PF0267**	101,9×50,9×16,3	OK033/ OK040
3.0	02/04 →	169	230	BSC			**PF0266**	149×60,4×18,5	OK033	BSC			**PF0267**	101,9×50,9×16,3	OK033/ OK040
JEEP															
Cherokee V (KK)															
2.5 Di	01/10 →	90	122	ST	4x4	[+]	**PF0211**	146×64×18		LG		[+]	**PF0210**	116,7×52,6×17	
2.8 CRD	05/08 →	130	177	ST		[+]	**PF0211**	146×64×18		LG		[+]	**PF0210**	116,7×52,6×17	
3.7 V6	01/08 →	151	205	ST		[+]	**PF0211**	146×64×18		LG		[+]	**PF0210**	116,7×52,6×17	
Cherokee (KL)															
2.0 CRD	04/14 →	103	140	ST		[+]	**PF0804**	141,9×61,2×21		LG		[+]	**PF0805**	115,5×49,5×16,9	
2.0 CRD	04/14 →	103	140							LG		[+]	**PF0805**	115,5×49,5×16,9	
2.0 CRD	04/14 →	103	140							LG		[+]	**PF0805**	115,5×49,5×16,9	
2.0 CRD	04/14 →	125	170	ST		[+]	**PF0804**	141,9×61,2×21		LG		[+]	**PF0805**	115,5×49,5×16,9	
2.0 CRD	04/14 →	125	170							LG		[+]	**PF0805**	115,5×49,5×16,9	
2.0 CRD	04/14 →	125	170							LG		[+]	**PF0805**	115,5×49,5×16,9	
2.4	11/13 →	130	177	ST		[+]	**PF0804**	141,9×61,2×21		LG		[+]	**PF0805**	115,5×49,5×16,9	
2.4	11/13 →	130	177							LG		[+]	**PF0805**	115,5×49,5×16,9	
2.4	11/13 →	130	177							LG		[+]	**PF0805**	115,5×49,5×16,9	
2.4	11/13 →	137	186	ST		[+]	**PF0804**	141,9×61,2×21		LG		[+]	**PF0805**	115,5×49,5×16,9	
2.4	11/13 →	137	186							LG		[+]	**PF0805**	115,5×49,5×16,9	
2.4	11/13 →	137	186							LG		[+]	**PF0805**	115,5×49,5×16,9	
3.2	11/13 →	200	272	ST		[+]	**PF0804**	141,9×61,2×21		LG		[+]	**PF0805**	115,5×49,5×16,9	
3.2	11/13 →	200	272							LG		[+]	**PF0805**	115,5×49,5×16,9	
3.2	11/13 →	200	272							LG		[+]	**PF0805**	115,5×49,5×16,9	
3.2 V6	11/13 →	200	272	ST		[+]	**PF0804**	141,9×61,2×21		LG		[+]	**PF0805**	115,5×49,5×16,9	

		KW	CV	SiS	i	W.i.	MAGNETI MARELLI	W×H×Th (mm)	Extra kit [Opt]	SiS	i	W.i.	MAGNETI MARELLI	W×H×Th (mm)	Extra kit [Opt]
JEEP															
Cherokee (KL)															
3.2 V6	11/13→	200	272							LG		[+]	**PF0805**	115,5×49,5×16,9	
3.2 V6	11/13→	200	272							LG		[+]	**PF0805**	115,5×49,5×16,9	
Compass (MK49)															
2.0	05/11→	115	156	ST		[+]	**PF0338**	144,9×54,9×15,6		AK		[+]	**PF0285**	85,5×38,7×15,5	
2.0	05/11→	115	156							AK		[+]	**PF0285**	85,5×38,7×15,5	
2.0 CRD	08/06→	103	140	ST		[+]	**PF0338**	144,9×54,9×15,6		AK		[+]	**PF0285**	85,5×38,7×15,5	
2.0 CRD	08/06→	103	140							AK		[+]	**PF0285**	85,5×38,7×15,5	
2.0 CRD 4x4	09/06→	103	140	ST		[+]	**PF0338**	144,9×54,9×15,6		AK		[+]	**PF0285**	85,5×38,7×15,5	
2.0 CRD 4x4	09/06→	103	140							AK		[+]	**PF0285**	85,5×38,7×15,5	
2.2 CRD	05/11→	100	136							AK		[+]	**PF0285**	85,5×38,7×15,5	
2.2 CRD 4x4	12/10→	120	163							AK		[+]	**PF0285**	85,5×38,7×15,5	
2.4	08/06→	125	170	ST		[+]	**PF0338**	144,9×54,9×15,6		AK		[+]	**PF0285**	85,5×38,7×15,5	
2.4	08/06→	125	170							AK		[+]	**PF0285**	85,5×38,7×15,5	
2.4 4x4	09/06→	125	170	ST		[+]	**PF0338**	144,9×54,9×15,6		AK		[+]	**PF0285**	85,5×38,7×15,5	
2.4 4x4	09/06→	125	170							AK		[+]	**PF0285**	85,5×38,7×15,5	
Patriot (MK74)															
2.0	01/11→	115	156	ST		[+]	**PF0338**	144,9×54,9×15,6		AK		[+]	**PF0285**	85,5×38,7×15,5	
2.0 CRD	01/08→	103	140	ST		[+]	**PF0338**	144,9×54,9×15,6		AK		[+]	**PF0285**	85,5×38,7×15,5	
2.2 CRD	01/11→	120	163	ST		[+]	**PF0338**	144,9×54,9×15,6		AK		[+]	**PF0285**	85,5×38,7×15,5	
2.2 CRD	01/11→	100	136	ST		[+]	**PF0338**	144,9×54,9×15,6		AK		[+]	**PF0285**	85,5×38,7×15,5	
2.4	01/08→	125	170	ST		[+]	**PF0338**	144,9×54,9×15,6		AK		[+]	**PF0285**	85,5×38,7×15,5	
2.4 Eco +	07/08→	125	170	ST		[+]	**PF0338**	144,9×54,9×15,6		AK		[+]	**PF0285**	85,5×38,7×15,5	
Renegade															
1.4 M-AIR 140cv	14→	103	140	ATE		[+]	**PF0792**	155,3×64,5×19,2		TRW		[+]	**PF0794**	115,5×49,5×17,2	OK039
1.4 M-AIR	14→	125	170	MN		[+]	**PF0793**	140,9×63,3×20,5		TRW		[+]	**PF0794**	115,5×49,5×17,2	OK039
1.6 MJET 120cv	14→	88	120	ATE		[+]	**PF0792**	155,3×64,5×19,2		TRW		[+]	**PF0794**	115,5×49,5×17,2	OK039
1.6 BZ	14→	81	110	MN		[+]	**PF0793**	140,9×63,3×20,5		TRW		[+]	**PF0794**	115,5×49,5×17,2	OK039
2.0 MJET	14→			MN		[+]	**PF0793**	140,9×63,3×20,5		TRW		[+]	**PF0794**	115,5×49,5×17,2	OK039
Wrangler II (TJ)															
2.4	11/02→	105	143	ST		[+]	**PF0211**	146×64×18		LG		[+]	**PF0210**	116,7×52,6×17	
2.5	08/96→	87	118	ST		[+]	**PF0211**	146×64×18		LG		[+]	**PF0210**	116,7×52,6×17	
2.8 CRDi	11/06→	130	177	ST		[+]	**PF0211**	146×64×18		LG		[+]	**PF0210**	116,7×52,6×17	
3.8	02/06→	153	208	ST		[+]	**PF0211**	146×64×18		LG		[+]	**PF0210**	116,7×52,6×17	
3.8 Rubicon Rear Wheel Drive	03/06→	153	208	ST		[+]	**PF0211**	146×64×18		LG		[+]	**PF0210**	116,7×52,6×17	
4.0	08/96→	130	177	ST		[+]	**PF0211**	146×64×18		LG		[+]	**PF0210**	116,7×52,6×17	
4.0	06/98→	124	169	ST		[+]	**PF0211**	146×64×18		LG		[+]	**PF0210**	116,7×52,6×17	
4.0 Rubicon	08/03→	128	174	ST		[+]	**PF0211**	146×64×18		LG		[+]	**PF0210**	116,7×52,6×17	

		KW	CV	SiS	i	W.i.	MAGNETI MARELLI	W×H×Th (mm)	Extra kit [Opt]	SiS	i	W.i.	MAGNETI MARELLI	W×H×Th (mm)	Extra kit [Opt]
JEEP															
Wrangler III (JK)															
2.8 CRD	11/10 →	147	200	ST		[+]	**PF0211**	146×64×18		LG		[+]	**PF0210**	116,7×52,6×17	
2.8 CRD	04/07 →	130	177	ST		[+]	**PF0211**	146×64×18		LG		[+]	**PF0210**	116,7×52,6×17	
3.8	04/07 →	146	199	ST		[+]	**PF0211**	146×64×18		LG		[+]	**PF0210**	116,7×52,6×17	
KIA															
Carens I (FC)															
1.8 i	11/00 → 07/02	81	110	ST		[+]	**PF0458**	129×51,4×16,5							
2.0 GSX	10/01 → 06/02	100	136	ST		[+]	**PF0458**	129×51,4×16,5							
Carens II (FJ)															
1.6	07/02 → 08	77	105	MN		[+]	**PF0281**	130,1×58,1×16,4							
1.8	07/02 → 08	93	126	MN		[+]	**PF0281**	130,1×58,1×16,4							
2.0 CRDi	07/02 → 08	83	113	MN		[+]	**PF0281**	130,1×58,1×16,4							
2.0 CRDi	11/05 → 08	103	140	MN		[+]	**PF0281**	130,1×58,1×16,4							
2.0 CVVT	08/04 → 08	102	139	MN		[+]	**PF0281**	130,1×58,1×16,4							
Carens III (UN)															
2.0 CVVT	09/06 → 10			AK		[+]	**PF0277**	131,3×60,2×17,6							
2.0 CRDi	09/06 → 10			AK		[+]	**PF0277**	131,3×60,2×17,6							
Carens IV															
1.6	03/13 →	99	135							AK	+ABS	[+]	**PF0750**	99,7×40,9×15,7	
2.0	03/13 →	130	177							AK	+ABS	[+]	**PF0750**	99,7×40,9×15,7	
1.7 CRDi	03/13 →	85	116							AK	+ABS	[+]	**PF0750**	99,7×40,9×15,7	
1.7 CRDi	03/13 →	100	136							AK	+ABS	[+]	**PF0750**	99,7×40,9×15,7	
2.0 GDi	03/13 →	122	166							AK	+ABS	[+]	**PF0750**	99,7×40,9×15,7	
Cee'D Berlina (ED)															
1.4	12/06 →	77	105	MN		[+]	**PF0281**	130,1×58,1×16,4		MN		[+]	**PF0701**	93,1×41×14,9	
1.4	12/06 →	80	109	MN		[+]	**PF0281**	130,1×58,1×16,4		MN		[+]	**PF0701**	93,1×41×14,9	
1.4 CVVT	06/10 →	66	90	MN		[+]	**PF0281**	130,1×58,1×16,4		MN		[+]	**PF0701**	93,1×41×14,9	
1.6	09/07 →	85	115	MN		[+]	**PF0281**	130,1×58,1×16,4		MN		[+]	**PF0701**	93,1×41×14,9	
1.6	12/06 →	90	122	MN		[+]	**PF0281**	130,1×58,1×16,4		MN		[+]	**PF0701**	93,1×41×14,9	
1.6	02/08 →	93	126	MN		[+]	**PF0281**	130,1×58,1×16,4		MN		[+]	**PF0701**	93,1×41×14,9	
1.6 CRDi 115	12/06 →	85	115	MN		[+]	**PF0281**	130,1×58,1×16,4		MN		[+]	**PF0701**	93,1×41×14,9	
1.6 CRDi 128	10/10 →	94	128	MN		[+]	**PF0281**	130,1×58,1×16,4		MN		[+]	**PF0701**	93,1×41×14,9	
1.6 CRDi 90	12/06 →	66	90	MN		[+]	**PF0281**	130,1×58,1×16,4		MN		[+]	**PF0701**	93,1×41×14,9	
1.6 CVVT	10/10 →	92	125	MN		[+]	**PF0281**	130,1×58,1×16,4		MN		[+]	**PF0701**	93,1×41×14,9	
2.0	12/06 →	105	143	MN		[+]	**PF0281**	130,1×58,1×16,4		MN		[+]	**PF0701**	93,1×41×14,9	
2.0 CRDi 140	09/07 →	103	140	MN		[+]	**PF0281**	130,1×58,1×16,4		MN		[+]	**PF0701**	93,1×41×14,9	
Cee'D SW (ED)															
1.4	10/10 →	77	105	MN		[+]	**PF0281**	130,1×58,1×16,4		MN		[+]	**PF0701**	93,1×41×14,9	
1.4	09/07 →	80	109	MN		[+]	**PF0281**	130,1×58,1×16,4		MN		[+]	**PF0701**	93,1×41×14,9	
1.4 CVVT	10/10 →	66	90	MN		[+]	**PF0281**	130,1×58,1×16,4		MN		[+]	**PF0701**	93,1×41×14,9	
1.6	09/07 →	85	115	MN		[+]	**PF0281**	130,1×58,1×16,4		MN		[+]	**PF0701**	93,1×41×14,9	
1.6	09/07 →	90	122	MN		[+]	**PF0281**	130,1×58,1×16,4		MN		[+]	**PF0701**	93,1×41×14,9	
1.6	09/07 →	93	126	MN		[+]	**PF0281**	130,1×58,1×16,4		MN		[+]	**PF0701**	93,1×41×14,9	
1.6 CRDi 115	09/07 →	85	115	MN		[+]	**PF0281**	130,1×58,1×16,4		MN		[+]	**PF0701**	93,1×41×14,9	

		KW	CV	SiS	i	W.i.	MAGNETI MARELLI	W×H×Th (mm)	Extra kit [Opt]	SiS	i	W.i.	MAGNETI MARELLI	W×H×Th (mm)	Extra kit [Opt]
KIA															
Cee'D SW (ED)															
1.6 CRDi 128	10/10→	94	128	MN		[+]	PF0281	130,1×58,1×16,4		MN		[+]	PF0701	93,1×41×14,9	
1.6 CRDi 90	09/07→	66	90	MN		[+]	PF0281	130,1×58,1×16,4		MN		[+]	PF0701	93,1×41×14,9	
1.6 CVVT	06/09→	92	125	MN		[+]	PF0281	130,1×58,1×16,4		MN		[+]	PF0701	93,1×41×14,9	
2.0	09/07→	105	143	MN		[+]	PF0281	130,1×58,1×16,4		MN		[+]	PF0701	93,1×41×14,9	
2.0 CRDi 140	09/07→	103	140	MN		[+]	PF0281	130,1×58,1×16,4		MN		[+]	PF0701	93,1×41×14,9	
Cee'D II															
1.4 CRDi 90	05/12→	66	90	AK		[+]	PF0749	132,9×60×17,5		AK		[+]	PF0750	99,7×40,9×15,7	
1.4 CVVT	05/12→	66	90	AK		[+]	PF0749	132,9×60×17,5		AK		[+]	PF0750	99,7×40,9×15,7	
1.4 CVVT	05/12→	73	100	AK		[+]	PF0749	132,9×60×17,5		AK		[+]	PF0750	99,7×40,9×15,7	
1.6 CRDi 110	05/12→	81	110	AK		[+]	PF0749	132,9×60×17,5		AK		[+]	PF0750	99,7×40,9×15,7	
1.6 CRDi 115	05/12→	85	115	AK		[+]	PF0749	132,9×60×17,5		AK		[+]	PF0750	99,7×40,9×15,7	
1.6 CRDi 128	05/12→	94	128	AK		[+]	PF0749	132,9×60×17,5		AK		[+]	PF0750	99,7×40,9×15,7	
1.6 CRDi 90	05/12→	66	90	AK		[+]	PF0749	132,9×60×17,5		AK		[+]	PF0750	99,7×40,9×15,7	
1.6 CVVT	05/12→	92	125	AK		[+]	PF0749	132,9×60×17,5		AK		[+]	PF0750	99,7×40,9×15,7	
1.6 GDI	05/12→	99	135	AK		[+]	PF0749	132,9×60×17,5		AK		[+]	PF0750	99,7×40,9×15,7	
1.6 GT	06/13→	150	204	AK		[+]	PF0749	132,9×60×17,5		AK		[+]	PF0750	99,7×40,9×15,7	
Cee'D II SW															
1.4 CRDi	09/12→	66	90	AK		[+]	PF0749	132,9×60×17,5		AK		[+]	PF0750	99,7×40,9×15,7	
1.4 CVVT	09/12→	73	100	AK		[+]	PF0749	132,9×60×17,5		AK		[+]	PF0750	99,7×40,9×15,7	
1.6 CRDi	03/13	81	110	AK		[+]	PF0749	132,9×60×17,5		AK		[+]	PF0750	99,7×40,9×15,7	
1.6 CRDi	09/12→	94	128	AK		[+]	PF0749	132,9×60×17,5		AK		[+]	PF0750	99,7×40,9×15,7	
1.6 GDI	09/12→	99	135	AK		[+]	PF0749	132,9×60×17,5		AK		[+]	PF0750	99,7×40,9×15,7	
Clarus II (GC)															
1.8 i 16V	05/98→	85	116	ST		[+]	PF0458	129×51,4×16,5							
2.0 i 16V	05/98→	98	133	ST		[+]	PF0458	129×51,4×16,5							
Magentis I (GD)															
2.0	05/01→	100	136	ST		[+]	PF0467	137×53×17		MN		[+]	PF0278	98,4×41×15	
2.5 V6	05/01→	124	169	ST		[+]	PF0467	137×53×17		MN		[+]	PF0278	98,4×41×15	
2.7 V6	04/04→	132	180	ST		[+]	PF0467	137×53×17		MN		[+]	PF0278	98,4×41×15	
Magentis II (MG)															
2.0	11/05→	106	144	AK		[+]	PF0277	131,3×60,2×17,6		MN		[+]	PF0278	98,4×41×15	
2.0	07/09→	121	165	AK		[+]	PF0277	131,3×60,2×17,6		MN		[+]	PF0278	98,4×41×15	
2.0 CRDi	11/05→ 12/08	100	163	AK		[+]	PF0277	131,3×60,2×17,6		MN		[+]	PF0278	98,4×41×15	
2.0 CRDi	04/06→	103	140	AK		[+]	PF0277	131,3×60,2×17,6		MN		[+]	PF0278	98,4×41×15	
2.0 CRDi	04/06→	110	150	AK		[+]	PF0277	131,3×60,2×17,6		MN		[+]	PF0278	98,4×41×15	
2.4	08/06→	119	162	AK		[+]	PF0277	131,3×60,2×17,6		MN		[+]	PF0278	98,4×41×15	
2.7	11/05→	138	188	AK		[+]	PF0277	131,3×60,2×17,6		MN		[+]	PF0278	98,4×41×15	
2.7 V6	07/09→	142	193	AK		[+]	PF0277	131,3×60,2×17,6		MN		[+]	PF0278	98,4×41×15	
Opirus															
Opirus 3.5i	03→									MN		[+]	PF0278	98,4×41×15	
Optima I															
2.0i 16V	05/01→ 05			ST		[+]	PF0467	137×53×17		MN		[+]	PF0278	98,4×41×15	
2.5i V6	05/01→ 05			ST		[+]	PF0467	137×53×17		MN		[+]	PF0278	98,4×41×15	

		KW	CV	SiS	i	W.i.	MAGNETI MARELLI	W×H×Th (mm)	Extra kit [Opt]	SiS	i	W.i.	MAGNETI MARELLI	W×H×Th (mm)	Extra kit [Opt]
KIA															
Optima II															
2.0i	11/05→			AK		[+]	**PF0277**	131,3×60,2×17,6		MN		[+]	**PF0278**	98,4×41×15	
2.0 CRDi	11/05→			AK		[+]	**PF0277**	131,3×60,2×17,6		MN		[+]	**PF0278**	98,4×41×15	
2.7i	11/05→			AK		[+]	**PF0277**	131,3×60,2×17,6		MN		[+]	**PF0278**	98,4×41×15	
Picanto (BA)															
1.0	09/05→	45	61	ST		[+]	**PF0280**	116,2×47,5×16,8	OK092	MN	+ABS	[+]	**PF0745**	92,4×41×14,8	
1.0	11/09→	46	63	ST		[+]	**PF0280**	116,2×47,5×16,8	OK092	MN	+ABS	[+]	**PF0745**	92,4×41×14,8	
1.1	04/04→	48	65	ST		[+]	**PF0280**	116,2×47,5×16,8	OK092	MN	+ABS	[+]	**PF0745**	92,4×41×14,8	
1.1 CRDi	11/05→	55	75	ST		[+]	**PF0280**	116,2×47,5×16,8	OK092	MN	+ABS	[+]	**PF0745**	92,4×41×14,8	
Picanto II (TA)															
1.0	05/11→	51	69							MN	+ABS	[+]	**PF0745**	92,4×41×14,8	
1.0	05/11→	51	69	AK		[+]	**PF0280**	116,2×47,5×16,8	OK092	MN	Made in Europa	[+]	**PF0822**	93,1×41×15,4	
1.0 Bi-Fuel	05/11→	60	82							MN	+ABS	[+]	**PF0745**	92,4×41×14,8	
1.0 Bi-Fuel	05/11→	60	82	AK		[+]	**PF0280**	116,2×47,5×16,8	OK092	MN	Made in Europa	[+]	**PF0822**	93,1×41×15,4	
1.2	09/11→	63	85							MN	+ABS	[+]	**PF0745**	92,4×41×14,8	
1.2	09/11→	63	85	AK		[+]	**PF0280**	116,2×47,5×16,8	OK092	MN	Made in Europa	[+]	**PF0822**	93,1×41×15,4	
Pro Cee'D (ED)															
1.4	02/08→	77	105	MN		[+]	**PF0281**	130,1×58,1×16,4		MN	+ABS	[+]	**PF0701**	93,1×41×14,9	
1.4	02/08→	80	109	MN		[+]	**PF0281**	130,1×58,1×16,4		MN	+ABS	[+]	**PF0701**	93,1×41×14,9	
1.6	02/08→	90	122	MN		[+]	**PF0281**	130,1×58,1×16,4		MN	+ABS	[+]	**PF0701**	93,1×41×14,9	
1.6	02/08→	93	126	MN		[+]	**PF0281**	130,1×58,1×16,4		MN	+ABS	[+]	**PF0701**	93,1×41×14,9	
1.6 CRDi 115	02/08→	85	115	MN		[+]	**PF0281**	130,1×58,1×16,4		MN	+ABS	[+]	**PF0701**	93,1×41×14,9	
1.6 CRDi 128	10/10→	94	128	MN		[+]	**PF0281**	130,1×58,1×16,4		MN	+ABS	[+]	**PF0701**	93,1×41×14,9	
1.6 CRDi 90	02/08→	66	90	MN		[+]	**PF0281**	130,1×58,1×16,4		MN	+ABS	[+]	**PF0701**	93,1×41×14,9	
1.6 CVVT	10/10→	92	125	MN		[+]	**PF0281**	130,1×58,1×16,4		MN	+ABS	[+]	**PF0701**	93,1×41×14,9	
2.0	02/08→	105	143	MN		[+]	**PF0281**	130,1×58,1×16,4		MN	+ABS	[+]	**PF0701**	93,1×41×14,9	
2.0 CRDi 140	02/08→	103	140	MN		[+]	**PF0281**	130,1×58,1×16,4		MN	+ABS	[+]	**PF0701**	93,1×41×14,9	
Pro Cee'D II															
1.4 CRDi	03/13→	66	90	AK		[+]	**PF0749**	132,9×60×17,5		AK		[+]	**PF0750**	99,7×40,9×15,7	
1.4 CVVT	03/13→	73	100	AK		[+]	**PF0749**	132,9×60×17,5		AK		[+]	**PF0750**	99,7×40,9×15,7	
1.6 CRDi	03/13	81	110	AK		[+]	**PF0749**	132,9×60×17,5		AK		[+]	**PF0750**	99,7×40,9×15,7	
1.6 CRDi	03/13→	94	128	AK		[+]	**PF0749**	132,9×60×17,5		AK		[+]	**PF0750**	99,7×40,9×15,7	
1.6 GDI	03/13→	99	135	AK		[+]	**PF0749**	132,9×60×17,5		AK		[+]	**PF0750**	99,7×40,9×15,7	
1.6 GT	06/13	150	204	AK		[+]	**PF0749**	132,9×60×17,5		AK		[+]	**PF0750**	99,7×40,9×15,7	
Retona (CE)															
2.0	97→99			ATE		[+]	**PF0287**	151,4×46,4×17,5							
Rio Berlina (DC)															
1.3	08/00→05			ST		[+]	**PF0286**	91,6×64×15							
1.3	09/00→02/05	55	75	ST		[+]	**PF0458**	129×51,4×16,5							
1.3	08/02→02/05	60	82	ST		[+]	**PF0458**	129×51,4×16,5							
1.5 16V	09/00→02/05	72	98	ST		[+]	**PF0458**	129×51,4×16,5							

		KW	CV	SiS	i	W.i.	MAGNETI MARELLI	W×H×Th (mm)	Extra kit [Opt]	SiS	i	W.i.	MAGNETI MARELLI	W×H×Th (mm)	Extra kit [Opt]
KIA															
Rio SW (DC)															
1.3	08/00 → 02/05	60	82	ST		[+]	**PF0286**	91,6×64×15							
1.3	08/00 → 02/05	55	75	ST		[+]	**PF0458**	129×51,4×16,5							
1.5 16V	08/00 → 02/05	72	98	ST		[+]	**PF0286**	91,6×64×15							
1.5 16V	08/00 → 02/05	72	98	ST		[+]	**PF0458**	129×51,4×16,5							
1.5 16V	09/02 → 02/05	71	97	ST		[+]	**PF0458**	129×51,4×16,5							
1.5 16V	09/02 → 02/05	71	97	ST		[+]	**PF0286**	91,6×64×15							
Rio II (JB)															
1.4 16V	03/05 →	71	97	MN		[-]	**PF0698**	129,8×56×17,5		MN	+ABS	[+]	**PF0701**	93,1×41×14,9	
1.5 CRDi	03/05 →	81	110	MN		[-]	**PF0698**	129,8×56×17,5		MN	+ABS	[+]	**PF0701**	93,1×41×14,9	
1.6 CVVT	03/05 →	82	112	MN		[-]	**PF0698**	129,8×56×17,5		MN	+ABS	[+]	**PF0701**	93,1×41×14,9	
Rio SW II (JB)															
1.4 16V	03/05 →	71	97	MN		[-]	**PF0698**	129,8×56×17,5		MN	+ABS	[+]	**PF0701**	93,1×41×14,9	
1.5 CRDi	03/05 →	81	110	MN		[-]	**PF0698**	129,8×56×17,5		MN	+ABS	[+]	**PF0701**	93,1×41×14,9	
1.6 16V	03/05 →	82	112	MN		[-]	**PF0698**	129,8×56×17,5		MN	+ABS	[+]	**PF0701**	93,1×41×14,9	
Rio III (UB)															
1.1 CRDi	09/11 →	55	75	MN		[+]	**PF0766**	132,7×58,2×17,8		AK	+ABS	[+]	**PF0750**	99,7×40,9×15,7	
1.25 CVVT	09/11 →	63	86	MN		[+]	**PF0766**	132,7×58,2×17,8		AK	+ABS	[+]	**PF0750**	99,7×40,9×15,7	
1.4 CRDi	09/11 →	66	90	MN		[+]	**PF0766**	132,7×58,2×17,8		AK	+ABS	[+]	**PF0750**	99,7×40,9×15,7	
1.4 CVVT	09/11 →	80	109	MN		[+]	**PF0766**	132,7×58,2×17,8		AK	+ABS	[+]	**PF0750**	99,7×40,9×15,7	
Sephia (FA)															
1.5i	95 → 98			ATE		[+]	**PF0287**	151,4×46,4×17,5							
1.6i	95 → 98			ATE		[+]	**PF0287**	151,4×46,4×17,5							
1.8i 16V	95 → 98			ATE		[+]	**PF0287**	151,4×46,4×17,5							
Shuma I (FB)															
1.5 i 16V	10/97 → 03/01	65	88	ATE		[+]	**PF0287**	151,4×46,4×17,5							
1.6	01/01 → 12/01	75	101	ATE		[+]	**PF0287**	151,4×46,4×17,5							
1.8 i 16V	10/97 → 03/01	81	110	ATE		[+]	**PF0287**	151,4×46,4×17,5							
Shuma II (FB)															
1.6	05/01 → 08/04	75	101	ST		[+]	**PF0458**	129×51,4×16,5							
1.8	04/03 → 08/04	84	114	ST		[+]	**PF0458**	129×51,4×16,5							
1.8	05/01 → 06/04	81	110	ST		[+]	**PF0458**	129×51,4×16,5							
Shuma 3 Volumi II (FB)															
1.6	05/01 → 05/04	75	101	ST		[+]	**PF0458**	129×51,4×16,5							
Sorento (JC)															
2.4i	02 →			AK		[+]	**PF0447**	155×60×17,3		AK		[+]	**PF0448**	118,2×47×15,8	OK095
2.5 CRDi	02 →			AK		[+]	**PF0447**	155×60×17,3		AK		[+]	**PF0448**	118,2×47×15,8	OK095
3.5i V6	02 →			AK		[+]	**PF0447**	155×60×17,3		AK		[+]	**PF0448**	118,2×47×15,8	OK095
Sorento (XM)															
2.0 CRDi	11/10 →	110	150	MN		[+]	**PF0767**	156,8×60,7×17							
2.0 CRDi 4WD	11/10 →	110	150	MN		[+]	**PF0767**	156,8×60,7×17							
2.2 CRDi	11/09 →	145	197	MN		[+]	**PF0767**	156,8×60,7×17							
2.2 CRDi 4WD	11/09 →	145	197	MN		[+]	**PF0767**	156,8×60,7×17							
2.2 CRDi	11/09 →	147	200	MN		[+]	**PF0767**	156,8×60,7×17							
2.2 CRDi 4x4	11/09 →	147	200	MN		[+]	**PF0767**	156,8×60,7×17							

		KW	CV	SiS	i	W.i.	MAGNETI MARELLI	W×H×Th (mm)	Extra kit [Opt]	SiS	i	W.i.	MAGNETI MARELLI	W×H×Th (mm)	Extra kit [Opt]
KIA															
Sorento (XM)															
2.4 CVVT	11/09→	128	174	MN		[+]	**PF0767**	156,8×60,7×17							
2.4 CVVT 4WD	11/09→	128	174	MN		[+]	**PF0767**	156,8×60,7×17							
2.4 CVVT	10/12→	141	192	MN		[+]	**PF0767**	156,8×60,7×17							
2.4 CVVT 4x4	10/12→	141	192	MN		[+]	**PF0767**	156,8×60,7×17							
2.4 GDI	10/12→	141	192	MN		[+]	**PF0767**	156,8×60,7×17							
2.4 GDI 4x4	10/12→	141	192	MN		[+]	**PF0767**	156,8×60,7×17							
3.5 4x4	11/09→	203	276	MN		[+]	**PF0767**	156,8×60,7×17							
3.5	11/09→	203	276	MN		[+]	**PF0767**	156,8×60,7×17							
3.5 4x4	01/11→	206	280	MN		[+]	**PF0767**	156,8×60,7×17							
Soul (AM)															
1.6	02/09→	90	122	AK		[+]	**PF0277**	131,3×60,2×17,6		AK	Europa	[+]	**PF0751**	99,9×41×15,5	
1.6 CRDi 115	02/09→	85	115	AK		[+]	**PF0277**	131,3×60,2×17,6		AK	Europa	[+]	**PF0751**	99,9×41×15,5	
1.6 CRDi 115	02/09→	85	116	AK		[+]	**PF0277**	131,3×60,2×17,6		AK	Europa	[+]	**PF0751**	99,9×41×15,5	
1.6 CRDi 128	02/09→	94	126	AK		[+]	**PF0277**	131,3×60,2×17,6		AK	Europa	[+]	**PF0751**	99,9×41×15,5	
1.6 CVVT	02/09→	77	105	AK		[+]	**PF0277**	131,3×60,2×17,6		AK	Europa	[+]	**PF0751**	99,9×41×15,5	
1.6 CVVT	02/09→	93	126	AK		[+]	**PF0277**	131,3×60,2×17,6		AK	Europa	[+]	**PF0751**	99,9×41×15,5	
1.6 CVVT	03/12→	95	129	AK		[+]	**PF0277**	131,3×60,2×17,6		AK	Europa	[+]	**PF0751**	99,9×41×15,5	
1.6 Flex	01/11→	94	128	AK		[+]	**PF0277**	131,3×60,2×17,6		AK	Europa	[+]	**PF0751**	99,9×41×15,5	
1.6 GDI	06/11→	103	140	AK		[+]	**PF0277**	131,3×60,2×17,6		AK	Europa	[+]	**PF0751**	99,9×41×15,5	
2.0	02/09→	122	166	AK		[+]	**PF0277**	131,3×60,2×17,6		AK	Europa	[+]	**PF0751**	99,9×41×15,5	
Sportage I															
2.0i	09/97→12/98			ATE		[+]	**PF0287**	151,4×46,4×17,5							
2.0 TDI	09/97→12/98			ATE		[+]	**PF0287**	151,4×46,4×17,5							
Sportage III (JE)															
2.0 16V 4WD	09/04→	104	141	AK		[+]	**PF0277**	131,3×60,2×17,6		MN		[+]	**PF0278**	98,4×41×15	
2.0 CRDi	01/06→	100	136	AK		[+]	**PF0277**	131,3×60,2×17,6		MN		[+]	**PF0278**	98,4×41×15	
2.0 CRDi	01/06→	103	140	AK		[+]	**PF0277**	131,3×60,2×17,6		MN		[+]	**PF0278**	98,4×41×15	
2.0 CRDi	02/05→	83	113	AK		[+]	**PF0277**	131,3×60,2×17,6		MN		[+]	**PF0278**	98,4×41×15	
2.0 CRDi	09/08→	110	150	AK		[+]	**PF0277**	131,3×60,2×17,6		MN		[+]	**PF0278**	98,4×41×15	
2.0 CRDi 4WD	01/06→	100	136	AK		[+]	**PF0277**	131,3×60,2×17,6		MN		[+]	**PF0278**	98,4×41×15	
2.0 CRDi 4WD	09/04→	83	113	AK		[+]	**PF0277**	131,3×60,2×17,6		MN		[+]	**PF0278**	98,4×41×15	
2.0 CRDi 4WD	01/06→	103	140	AK		[+]	**PF0277**	131,3×60,2×17,6		MN		[+]	**PF0278**	98,4×41×15	
2.0 CRDi 4WD	09/08→	110	150	AK		[+]	**PF0277**	131,3×60,2×17,6		MN		[+]	**PF0278**	98,4×41×15	
2.0 i 16V	09/04→	104	141	AK		[+]	**PF0277**	131,3×60,2×17,6		MN		[+]	**PF0278**	98,4×41×15	
2.7 V6 4WD	09/04→	129	175	AK		[+]	**PF0277**	131,3×60,2×17,6		MN		[+]	**PF0278**	98,4×41×15	
Sportage IV (SL)															
1.6 GDI	02/11→	99	135	ST		[+]	**PF0725**	137,8×61×17,6		MN	+ABS	[+]	**PF0701**	93,1×41×14,9	
1.7 CRDi	02/11→	85	116	ST		[+]	**PF0725**	137,8×61×17,6		MN	+ABS	[+]	**PF0701**	93,1×41×14,9	
2.0 CRDi	08/10→	135	184	ST		[+]	**PF0725**	137,8×61×17,6		MN	+ABS	[+]	**PF0701**	93,1×41×14,9	
2.0 CRDi	07/10→	100	136	ST		[+]	**PF0725**	137,8×61×17,6		MN	+ABS	[+]	**PF0701**	93,1×41×14,9	
2.0 CRDi AWD	08/10→	135	184	ST		[+]	**PF0725**	137,8×61×17,6		MN	+ABS	[+]	**PF0701**	93,1×41×14,9	
2.0 CRDi AWD	07/10→	100	136	ST		[+]	**PF0725**	137,8×61×17,6		MN	+ABS	[+]	**PF0701**	93,1×41×14,9	
2.0 CVVT	07/10→	120	163	ST		[+]	**PF0725**	137,8×61×17,6		MN	+ABS	[+]	**PF0701**	93,1×41×14,9	
2.0 CVVT AWD	07/10→	120	163	ST		[+]	**PF0725**	137,8×61×17,6		MN	+ABS	[+]	**PF0701**	93,1×41×14,9	

		KW	CV	SiS	i	W.i.	MAGNETI MARELLI	W×H×Th (mm)	Extra kit [Opt]	SiS	i	W.i.	MAGNETI MARELLI	W×H×Th (mm)	Extra kit [Opt]
KIA															
Sportage IV (SL)															
2.4 i AWD	08/10→	130	177	ST		[+]	**PF0725**	137,8×61×17,6		MN	+ABS	[+]	**PF0701**	93,1×41×14,9	
LANCIA															
Dedra															
1.6 i.e.	89→			LG	+ABS	[+]	**PF0105**	104×66,4×17	OK030	LG		[-]	**PF0783**	87,2×44,5×14,3	OK032
1.6	96→			ATE		[+]	**PF0782**	151,4×52×18		LG		[-]	**PF0783**	87,2×44,5×14,3	OK032
1.8 i.e.	89→			LG	+ABS	[+]	**PF0105**	104×66,4×17	OK030	LG		[-]	**PF0783**	87,2×44,5×14,3	OK032
1.8	96→			ATE		[+]	**PF0104**	156,4×52,5×17,8		LG		[-]	**PF0783**	87,2×44,5×14,3	OK032
1.8	96→		132	ATE		[+]	**PF0101**	155,1×59,1×19,3		LG		[-]	**PF0783**	87,2×44,5×14,3	OK032
1.8 16V	96→			ATE		[+]	**PF0104**	156,4×52,5×17,8							
1.9 TD	96→			ATE		[+]	**PF0104**	156,4×52,5×17,8		LG		[-]	**PF0783**	87,2×44,5×14,3	OK032
2.0 i.e.	89→			LG	+ABS	[+]	**PF0105**	104×66,4×17	OK030	LG		[-]	**PF0783**	87,2×44,5×14,3	OK032
2.0 i.e.	89→			LG		[+]	**PF0105**	104×66,4×17	OK030						
2.0 i.e.	90→			LG		[+]	**PF0122**	129,9×59×19	OK030						
2.0	96→			ATE		[+]	**PF0101**	155,1×59,1×19,3		LG		[-]	**PF0783**	87,2×44,5×14,3	OK032
2.0 i.e. T.HF Integrale	90→			LG		[+]	**PF0122**	129,9×59×19	OK030						
2.0 TD	89→			LG		[+]	**PF0105**	104×66,4×17	OK030						
2.0 TD	89→			LG	+ABS	[+]	**PF0105**	104×66,4×17	OK030	LG		[-]	**PF0783**	87,2×44,5×14,3	OK032
Delta I (831AB0)															
1.6 GT i.e.	05/87→08/92	66	90	LG	(831AB.010)	[+]	**PF0105**	104×66,4×17	OK030						
1.6 GT i.e.	08/86→08/88	80	109	LG	(831AB.016)	[+]	**PF0105**	104×66,4×17	OK030						
1.6 i.e. - LE	93→			LG		[+]	**PF0105**	104×66,4×17	OK030	LG		[-]	**PF0783**	87,2×44,5×14,3	OK032
1.9 Turbo DS	10/86→12/89	59	80	LG	(831AB.021)	[+]	**PF0105**	104×66,4×17	OK030						
2.0 16V	90→			LG		[+]	**PF0122**	129,9×59×19	OK030						
2.0 i.e. 16V - LS	93→			LG		[+]	**PF0122**	129,9×59×19	OK030	LG		[-]	**PF0783**	87,2×44,5×14,3	OK032
2.0 i.e. T. 16V - HF - LS	93→			LG		[+]	**PF0122**	129,9×59×19	OK030	LG		[-]	**PF0783**	87,2×44,5×14,3	OK032
2.0 HF Integrale	12/86→12/92	130	177	LG	(831AB, 831AB)	[+]	**PF0122**	129,9×59×19	OK030						
Delta II (836)															
1.6 i.e.	06/93→08/99	55	75	ATE	(836AD)	[+]	**PF0782**	151,4×52×18		LG		[-]	**PF0783**	87,2×44,5×14,3	OK032
1.6 (pinza post. in alluminio)	97→			ATE		[+]	**PF0782**	151,4×52×18		LG		[-]	**PF0106**	86,8×44,6×14,2	OK032
1.6 i.e.	03/96→08/99	66	90	ATE	(836AP)	[+]	**PF0222**	151,4×52×18							
1.6 i.e. 16V	01/96→08/99	76	103	ATE	(836AO)	[+]	**PF0222**	151,4×52×18							
1.8 i.e.	06/93→08/99	76	103	LG	(836AE)	[+]	**PF0105**	104×66,4×17	OK030	LG		[-]	**PF0783**	87,2×44,5×14,3	OK032
1.8 i.e.	07/94→08/99	66	90	LG	(836AG, 836AL)	[+]	**PF0105**	104×66,4×17	OK030	LG		[-]	**PF0783**	87,2×44,5×14,3	OK032
1.8	02/96→09/99	66	90	ATE		[+]	**PF0104**	156,4×52,5×17,8		LG		[-]	**PF0783**	87,2×44,5×14,3	OK032
1.8	02/96→09/99	66	90							LG		[-]	**PF0106**	86,8×44,6×14,2	OK032
1.8 i.e. 16V	03/96→08/99	83	113	ATE	(836AQ)	[+]	**PF0104**	156,4×52,5×17,8		LG		[-]	**PF0783**	87,2×44,5×14,3	OK032
1.8 i.e. 16V GT	03/96→08/99	96	131	ATE	(836AR)	[+]	**PF0104**	156,4×52,5×17,8		LG		[-]	**PF0783**	87,2×44,5×14,3	OK032

		KW	CV												
				SiS	i	W.i.	MAGNETI MARELLI	W×H×Th (mm)	Extra kit [Opt]	SiS	i	W.i.	MAGNETI MARELLI	W×H×Th (mm)	Extra kit [Opt]
LANCIA															
Delta II (836)															
1.9 TD	10/94 → 08/99	66	90	ATE	(836AM, 836AN)	[+]	**PF0222**	151,4×52×18							
1.9 TD	10/94 → 08/99	66	90	ATE	(836AM, 836AN)	[+]	**PF0782**	151,4×52×18		LG		[-]	**PF0783**	87,2×44,5×14,3	OK032
1.9 TD (pinza post. in alluminio)	97 →			ATE		[+]	**PF0782**	151,4×52×18		LG		[-]	**PF0106**	86,8×44,6×14,2	OK032
2.0	11/94 → 04/98	108	147	LG		[+]	**PF0122**	129,9×59×19	OK030	LG		[-]	**PF0783**	87,2×44,5×14,3	OK032
2.0 16V	06/93 → 08/99	102	139	LG	(836AA, 836CA)	[+]	**PF0122**	129,9×59×19	OK030	LG		[-]	**PF0783**	87,2×44,5×14,3	OK032
2.0 16V Turbo	06/93 → 08/99	137	186	LG	(836AB)	[+]	**PF0122**	129,9×59×19	OK030	LG		[-]	**PF0783**	87,2×44,5×14,3	OK032
2.0 16V Turbo	07/96 → 08/99	142	193	LG	(836AS)	[+]	**PF0122**	129,9×59×19	OK030	LG		[-]	**PF0783**	87,2×44,5×14,3	OK032
Delta III (844)															
1.4	09/08 →	88	120	BSC		[+]	**PF0214**	137×57,3×19	OK033/ OK038	BSC		[-]	**PF0125**	94,9×42,8×16,4	OK033/ OK040
1.4	07/10 →	88	120	BSC		[+]	**PF0214**	137×57,3×19	OK033/ OK038	BSC	+2 w.i.	[+]	**PF0568**	94,9×42,8×17,4	OK033/ OK040
1.4	09/08 →	110	150	BSC		[+]	**PF0563**	151×57,4×19	OK012/ OK038	BSC		[-]	**PF0125**	94,9×42,8×16,4	OK033/ OK040
1.4	07/10 →	110	150	BSC		[+]	**PF0563**	151×57,4×19	OK012/ OK038	BSC	+2 w.i.	[+]	**PF0568**	94,9×42,8×17,4	OK033/ OK040
1.4	10 →	110	150	BSC	+2 w.i.	[+]	**PF0124**	151×57,4×19	OK012/ OK038	BSC	+2 w.i.	[+]	**PF0568**	94,9×42,8×17,4	OK033/ OK040
1.4 16V	07/10 →	103	140	BSC		[+]	**PF0563**	151×57,4×19	OK012/ OK038	BSC		[-]	**PF0125**	94,9×42,8×16,4	OK033/ OK040
1.4 16V	10 →	103	140	BSC	+2 w.i.	[+]	**PF0124**	151×57,4×19	OK012/ OK038	BSC	+2 w.i.	[+]	**PF0568**	94,9×42,8×17,4	OK033/ OK040
1.4 Bifuel	07/11 →	88	120	BSC		[+]	**PF0124**	151×57,4×19	OK012/ OK038	BSC	+2 w.i.	[+]	**PF0568**	94,9×42,8×17,4	OK033/ OK040
1.6 D Multijet	08/08 →	85	116	BSC		[+]	**PF0563**	151×57,4×19	OK012/ OK038	BSC		[-]	**PF0125**	94,9×42,8×16,4	OK033/ OK040
1.6 D Multijet	10 →	85	116	BSC	+2 w.i.	[+]	**PF0124**	151×57,4×19	OK012/ OK038	BSC	+2 w.i.	[+]	**PF0568**	94,9×42,8×17,4	OK033/ OK040
1.6 D Multijet	04/11 →	77	105	BSC		[+]	**PF0563**	151×57,4×19	OK012/ OK038	BSC		[-]	**PF0125**	94,9×42,8×16,4	OK033/ OK040
1.6 D Multijet	10 →	77	105	BSC	+2 w.i.	[+]	**PF0124**	151×57,4×19	OK012/ OK038	BSC	+2 w.i.	[+]	**PF0568**	94,9×42,8×17,4	OK033/ OK040
1.6 D Multijet	09/08 →	88	120	BSC		[+]	**PF0563**	151×57,4×19	OK012/ OK038	BSC		[-]	**PF0125**	94,9×42,8×16,4	OK033/ OK040
1.6 D Multijet	10 →	88	120	BSC	+2 w.i.	[+]	**PF0124**	151×57,4×19	OK012/ OK038	BSC	+2 w.i.	[+]	**PF0568**	94,9×42,8×17,4	OK033/ OK040
1.8	01/09 →	147	200	ATE		[+]	**PF0288**	155,2×71,3×20		BSC		[-]	**PF0125**	94,9×42,8×16,4	OK033/ OK040

		KW	CV	SiS	i	W.i.	MAGNETI MARELLI	W×H×Th (mm)	Extra kit [Opt]	SiS	i	W.i.	MAGNETI MARELLI	W×H×Th (mm)	Extra kit [Opt]
LANCIA															
Delta III (844)															
1.8	01/09→	147	200	ATE		[+]	**PF0288**	155,2×71,3×20		BSC	+2 w.i.	[+]	**PF0568**	94,9×42,8×17,4	OK033/ OK040
1.8 16V D-Ti	02/09→	147	200	ATE		[+]	**PF0288**	155,2×71,3×20		BSC		[-]	**PF0125**	94,9×42,8×16,4	OK033/ OK040
1.8 16V D-Ti	02/09→	147	200	ATE		[+]	**PF0288**	155,2×71,3×20		BSC	+2 w.i.	[+]	**PF0568**	94,9×42,8×17,4	OK033/ OK040
1.9 D Multijet	01/09→	140	190	ATE		[+]	**PF0288**	155,2×71,3×20		BSC		[-]	**PF0125**	94,9×42,8×16,4	OK033/ OK040
1.9 D Multijet	01/09→	140	190	ATE		[+]	**PF0288**	155,2×71,3×20		BSC	+2 w.i.	[+]	**PF0568**	94,9×42,8×17,4	OK033/ OK040
2.0 D Multijet	09/08→	120	163	ATE		[+]	**PF0288**	155,2×71,3×20		BSC		[-]	**PF0125**	94,9×42,8×16,4	OK033/ OK040
2.0 D Multijet	09/08→	120	163	ATE		[+]	**PF0288**	155,2×71,3×20		BSC	+2 w.i.	[+]	**PF0568**	94,9×42,8×17,4	OK033/ OK040
2.0 D Multijet	09/08→	121	165	ATE		[+]	**PF0288**	155,2×71,3×20		BSC		[-]	**PF0125**	94,9×42,8×16,4	OK033/ OK040
2.0 D Multijet	09/08→	121	165	ATE		[+]	**PF0288**	155,2×71,3×20		BSC	+2 w.i.	[+]	**PF0568**	94,9×42,8×17,4	OK033/ OK040
Flavia Cabriolet (JS)															
2.4	03/12→	125	170							AK	+2 w.i.	[+]	**PF0445**	91×44,8 ×15,4	
2.4	03/12→	129	175							AK	+2 w.i.	[+]	**PF0445**	91×44,8 ×15,4	
Lybra Berlina (839AX)															
1.6	10/00→ 10/05	76	103	ATE		[+]	**PF0112**	155,1×59,3×19		LG		[-]	**PF0109**	95,8×43,9×16,5	OK039/ OK069
1.6 16V	07/99→	76	103	ATE	(839AXA1A)	[+]	**PF0112**	155,1×59,3×19		LG		[-]	**PF0109**	95,8×43,9×16,5	OK039/ OK069
1.8 16V	07/99→	96	131	ATE	(839AXB1A, 839AXG1A)	[+]	**PF0101**	155,1×59,1×19,3		LG		[-]	**PF0109**	95,8×43,9×16,5	OK039/ OK069
1.8 16V	07/99→	96	131	ATE	(839AXB1A, 839AXG1A)	[+]	**PF0101**	155,1×59,1×19,3		LG		[-]	**PF0109**	95,8×43,9×16,5	OK039/ OK069
1.8 16V	07/99→	96	131	ATE	(839AXB1A, 839AXG1A)	[+]	**PF0103**	155,1×59,1×19,3		LG		[-]	**PF0109**	95,8×43,9×16,5	OK039/ OK069
1.9 JTD	05/01→	85	116	ATE		[+]	**PF0101**	155,1×59,1×19,3		LG		[-]	**PF0109**	95,8×43,9×16,5	OK039/ OK069
1.9 JTD	07/99→ 09/00	77	105	ATE	(839AXD1A)	[+]	**PF0101**	155,1×59,1×19,3		LG		[-]	**PF0109**	95,8×43,9×16,5	OK039/ OK069
1.9 JTD	09/00→ 05/01	81	110	ATE	(839AXI1A)	[+]	**PF0101**	155,1×59,1×19,3		LG		[-]	**PF0109**	95,8×43,9×16,5	OK039/ OK069
2.0 20V	07/99→ 09/00	113	154	ATE	(839AXC11, 839AXC1A)	[+]	**PF0103**	155,1×59,1×19,3		LG		[-]	**PF0109**	95,8×43,9×16,5	OK039/ OK069
2.0 20V	09/00→	110	150	ATE	(839AXH1A)	[+]	**PF0103**	155,1×59,1×19,3		LG		[-]	**PF0109**	95,8×43,9×16,5	OK039/ OK069
2.4 JTD	05/02→	110	150	ATE		[+]	**PF0101**	155,1×59,1×19,3		LG		[-]	**PF0109**	95,8×43,9×16,5	OK039/ OK069

		KW	CV	SiS	i	W.i.	MAGNETI MARELLI	W×H×Th (mm)	Extra kit [Opt]	SiS	i	W.i.	MAGNETI MARELLI	W×H×Th (mm)	Extra kit [Opt]
LANCIA															
Lybra Berlina (839AX)															
2.4 JTD	07/99 → 09/00	99	135	ATE	(839AXE1A)	[+]	**PF0101**	155,1×59,1×19,3		LG		[-]	**PF0109**	95,8×43,9×16,5	OK039/ OK069
2.4 JTD	09/00 → 05/02	103	140	ATE	(839AXL1A)	[+]	**PF0101**	155,1×59,1×19,3		LG		[-]	**PF0109**	95,8×43,9×16,5	OK039/ OK069
Lybra SW (839BX)															
1.6	10/00 → 10/05	76	103	ATE		[+]	**PF0112**	155,1×59,3×19		LG		[-]	**PF0109**	95,8×43,9×16,5	OK039/ OK069
1.6 16V	07/99 →	76	103	ATE	(839BXA1A)	[+]	**PF0112**	155,1×59,3×19		LG		[-]	**PF0109**	95,8×43,9×16,5	OK039/ OK069
1.8 16V	07/99 →	96	131	ATE	(839BXB1A, 839BXG1A)	[+]	**PF0101**	155,1×59,1×19,3		LG		[-]	**PF0109**	95,8×43,9×16,5	OK039/ OK069
1.8 16V	07/99 →	96	131	ATE	(839BXB1A, 839BXG1A)	[+]	**PF0101**	155,1×59,1×19,3		LG		[-]	**PF0109**	95,8×43,9×16,5	OK039/ OK069
1.8 16V	07/99 →	96	131	ATE	(839BXB1A, 839BXG1A)	[+]	**PF0103**	155,1×59,1×19,3		LG		[-]	**PF0109**	95,8×43,9×16,5	OK039/ OK069
1.9 JTD	05/01 →	85	116	ATE		[+]	**PF0101**	155,1×59,1×19,3		LG		[-]	**PF0109**	95,8×43,9×16,5	OK039/ OK069
1.9 JTD	07/99 → 09/00	77	105	ATE	(839BXD1A)	[+]	**PF0101**	155,1×59,1×19,3		LG		[-]	**PF0109**	95,8×43,9×16,5	OK039/ OK069
1.9 JTD	09/00 → 05/01	81	110	ATE	(839BXI1A)	[+]	**PF0101**	155,1×59,1×19,3		LG		[-]	**PF0109**	95,8×43,9×16,5	OK039/ OK069
2.0 20V	07/99 → 09/00	113	154	ATE	(839BXC11, 839BXC1A)	[+]	**PF0103**	155,1×59,1×19,3		LG		[-]	**PF0109**	95,8×43,9×16,5	OK039/ OK069
2.0 20V	09/00 →	110	150	ATE	(839BXH1A)	[+]	**PF0103**	155,1×59,1×19,3		LG		[-]	**PF0109**	95,8×43,9×16,5	OK039/ OK069
2.4 JTD	05/02 →	110	150	ATE		[+]	**PF0101**	155,1×59,1×19,3		LG		[-]	**PF0109**	95,8×43,9×16,5	OK039/ OK069
2.4 JTD	10/99 → 09/00	99	135	ATE	(839BXE1A)	[+]	**PF0101**	155,1×59,1×19,3		LG		[-]	**PF0109**	95,8×43,9×16,5	OK039/ OK069
2.4 JTD	09/00 →	103	140	ATE	(839BXL1A)	[+]	**PF0101**	155,1×59,1×19,3		LG		[-]	**PF0109**	95,8×43,9×16,5	OK039/ OK069
Musa (350)															
1.3 D Multijet	10/04 →	51	70	BSC		[-]	**PF0558**	122,9×53,4×18	OK012/ OK038						
1.3 D Multijet	09/06 →	66	90	BSC		[+]	**PF0126**	122,9×53,4×18	OK012/ OK040						
1.3 D Multijet	09/06 →	66	90	BSC		[+]	**PF0214**	137×57,3×19	OK012/ OK040						
1.3 D Multijet	03/09 →	70	95	BSC		[+]	**PF0126**	122,9×53,4×18	OK012/ OK040						
1.3 D Multijet	03/09 →	70	95	BSC		[+]	**PF0214**	137×57,3×19	OK012/ OK040						
1.4	10/07 →	66	90	BSC		[-]	**PF0558**	122,9×53,4×18	OK012/ OK038						

		KW	CV	SiS	i	W.i.	MAGNETI MARELLI	W×H×Th (mm)	Extra kit [Opt]	SiS	i	W.i.	MAGNETI MARELLI	W×H×Th (mm)	Extra kit [Opt]
LANCIA															
Musa (350)															
1.4	10/04→	70	95	BSC		[+]	**PF0126**	122,9×53,4×18	OK012/ OK040						
1.4	09/05→	57	78	BSC		[+]	**PF0126**	122,9×53,4×18	OK012/ OK040						
1.4 LPG	11/10→	57	78	BSC		[+]	**PF0126**	122,9×53,4×18	OK012/ OK040						
1.6 D Multijet	07/08→	85	116	BSC		[-]	**PF0228**	137×57,3×19	OK033/ OK038						
1.6 D Multijet	07/08→	88	120	BSC		[-]	**PF0228**	137×57,3×19	OK033/ OK038						
1.9 D Multijet	10/04→	74	101	BSC		[-]	**PF0228**	137×57,3×19	OK033/ OK038						
K Berlina / SW (838)															
2.0i	95→01			LG		[+]	**PF0122**	129,9×59×19	OK030	LG		[-]	**PF0111**	89,9×50×16,5	OK030
2.0i	95→01			ATE		[+]	**PF0118**	155,1×59,1×19,3		LG		[-]	**PF0111**	89,9×50×16,5	OK030
2.0i 20V T.	98→01			BR		[+]	**PF0113**	131,8×77,3×15,8		LG		[-]	**PF0111**	89,9×50×16,5	OK030
2.0i 20V T.	98→01			ATE		[+]	**PF0118**	155,1×59,1×19,3		LG		[-]	**PF0111**	89,9×50×16,5	OK030
2.0	94→01									LG		[-]	**PF0111**	89,9×50×16,5	OK030
2.0 IE	→98									LG		[-]	**PF0111**	89,9×50×16,5	OK030
2.0 IE T. 16V	→01/01									LG		[-]	**PF0111**	89,9×50×16,5	OK030
2.0 IE T. 16V	98→01			ATE		[+]	**PF0118**	155,1×59,1×19,3		LG		[-]	**PF0111**	89,9×50×16,5	OK030
2.4i	95→01			LG		[+]	**PF0122**	129,9×59×19	OK030	LG		[-]	**PF0111**	89,9×50×16,5	OK030
2.4	94→01									LG		[-]	**PF0111**	89,9×50×16,5	OK030
2.4 IE	→06/98									LG		[-]	**PF0111**	89,9×50×16,5	OK030
2.4 IE	98→01			ATE		[+]	**PF0118**	155,1×59,1×19,3		LG		[-]	**PF0111**	89,9×50×16,5	OK030
2.4iTD	95→01			LG		[+]	**PF0122**	129,9×59×19	OK030	LG		[-]	**PF0111**	89,9×50×16,5	OK030
2.4 TDI	95→01			ATE		[+]	**PF0118**	155,1×59,1×19,3		LG		[-]	**PF0111**	89,9×50×16,5	OK030
3.0i 24V	98→01			BR		[+]	**PF0113**	131,8×77,3×15,8		LG		[-]	**PF0111**	89,9×50×16,5	OK030
3.0i 24V	98→01			ATE		[+]	**PF0118**	155,1×59,1×19,3		LG		[-]	**PF0111**	89,9×50×16,5	OK030
3.0i V6	→04/98									LG		[-]	**PF0111**	89,9×50×16,5	OK030
3.0i	95→01			LG		[+]	**PF0122**	129,9×59×19	OK030	LG		[-]	**PF0111**	89,9×50×16,5	OK030
K Coupé (838)															
2.0 16V Turbo	11/96→03/01	151	205	LG	(838CB)	[+]	**PF0122**	129,9×59×19	OK030	LG		[-]	**PF0111**	89,9×50×16,5	OK030
2.0 16V Turbo	11/96→03/01	151	205	ATE	(838CB)	[+]	**PF0118**	155,1×59,1×19,3		LG		[-]	**PF0111**	89,9×50×16,5	OK030
2.0 20V	07/96→03/01	114	155							LG		[-]	**PF0111**	89,9×50×16,5	OK030
2.0 20V	07/96→03/01	114	155	ATE		[+]	**PF0118**	155,1×59,1×19,3		LG		[-]	**PF0111**	89,9×50×16,5	OK030
2.0 20V Turbo	06/98→03/01	162	220	BR	(838CM)	[+]	**PF0113**	131,8×77,3×15,8		LG		[-]	**PF0111**	89,9×50×16,5	OK030
2.0 20V Turbo	06/98→03/01	162	220	ATE	(838CM)	[+]	**PF0118**	155,1×59,1×19,3		LG		[-]	**PF0111**	89,9×50×16,5	OK030
2.4 20V	11/96→03/01	129	175							LG		[-]	**PF0111**	89,9×50×16,5	OK030
2.4 20V	11/96→03/01	129	175	ATE	(838CC)	[+]	**PF0118**	155,1×59,1×19,3		LG		[-]	**PF0111**	89,9×50×16,5	OK030
3.0 24V	11/96→03/01	150	204	LG	(838CD, 838CD11A)	[+]	**PF0122**	129,9×59×19	OK030	LG		[-]	**PF0111**	89,9×50×16,5	OK030
3.0 24V	11/96→03/01	150	204							LG		[-]	**PF0111**	89,9×50×16,5	OK030

		KW	CV	SiS	i	W.i.	MAGNETI MARELLI	W×H×Th (mm)	Extra kit [Opt]	SiS	i	W.i.	MAGNETI MARELLI	W×H×Th (mm)	Extra kit [Opt]
LANCIA															
K Coupé (838)															
3.0 24V	11/96 → 03/01	150	204	BR	(838CD, 838CD11A)	[+]	**PF0113**	131,8×77,3×15,8		LG		[-]	**PF0111**	89,9×50×16,5	OK030
Phedra (179)															
2.0	09/02 →	100	136	LG	(179AXA11)	[+]	**PF0182**	146,7×60×19	OK037/ OK017	LG		[-]	**PF0131**	87×53×17	OK039/ OK041
2.0 D Multijet	07/06 →	100	136	LG		[+]	**PF0182**	146,7×60×19	OK037/ OK017	LG		[-]	**PF0131**	87×53×17	OK039/ OK041
2.0 JTD	07/03 →	79	107	LG		[+]	**PF0182**	146,7×60×19	OK037/ OK017	LG		[-]	**PF0131**	87×53×17	OK039/ OK041
2.0 JTD	06/06 →	88	120	LG		[+]	**PF0182**	146,7×60×19	OK037/ OK017	LG		[-]	**PF0131**	87×53×17	OK039/ OK041
2.0 JTD	09/02 →	80	109	LG	(179AXB1A)	[+]	**PF0182**	146,7×60×19	OK037/ OK017	LG		[-]	**PF0131**	87×53×17	OK039/ OK041
2.2 D Multijet	03/08 →	125	170	LG		[+]	**PF0182**	146,7×60×19	OK037/ OK017	LG		[-]	**PF0131**	87×53×17	OK039/ OK041
2.2 JTD	09/02 →	94	128	LG	(179AXC1A)	[+]	**PF0182**	146,7×60×19	OK037/ OK017	LG		[-]	**PF0131**	87×53×17	OK039/ OK041
2.2 JTD	04/06 →	120	163							LG		[-]	**PF0131**	87×53×17	OK039/ OK041
3.0 V6	09/02 →	150	204	BR		[+]	**PF0498**	131,8×77,3×15,8		LG		[-]	**PF0131**	87×53×17	OK039/ OK041
Prisma (831AB0)															
1.6	01/83 → 04/86	77	105	LG		[+]	**PF0105**	104×66,4×17	OK030						
1.6	08/86 → 02/92	73	99	LG		[+]	**PF0105**	104×66,4×17	OK030						
1.6 i.e.	05/86 → 12/89	80	108	LG		[+]	**PF0105**	104×66,4×17	OK030						
1.6 i.e. Super	05/87 → 12/89	66	90	LG		[+]	**PF0105**	104×66,4×17	OK030						
1.9 Turbo Diesel	05/85 → 12/89	59	80	LG		[+]	**PF0105**	104×66,4×17	OK030						
Thema Berlina / SW (834)															
2000 16V	08/92 → 12/93	112	152							LG		[-]	**PF0116**	87×66,7×16,5	OK032
2000 16V Turbo	12/88 → 06/90	133	181							LG		[-]	**PF0116**	87×66,7×16,5	OK032
2000 16V Turbo	10/92 → 07/94	148	201							LG		[-]	**PF0116**	87×66,7×16,5	OK032
2000 i.e	09/88 → 05/92	86	117							LG		[-]	**PF0116**	87×66,7×16,5	OK032
2000 i.e.	03/86 → 09/88	83	113							LG		[-]	**PF0116**	87×66,7×16,5	OK032
2000 i.e.	11/84 → 09/88	88	120							LG		[-]	**PF0116**	87×66,7×16,5	OK032
2000 i.e.	09/87 → 05/92	85	115							LG		[-]	**PF0116**	87×66,7×16,5	OK032
2000 i.e. 16V	05/88 → 08/92	108	147							LG		[-]	**PF0116**	87×66,7×16,5	OK032
2000 i.e. 16V	02/89 → 05/92	104	141							LG		[-]	**PF0116**	87×66,7×16,5	OK032
2000 i.e. 16V Turbo	04/89 → 05/92	130	177							LG		[-]	**PF0116**	87×66,7×16,5	OK032
2000 i.e. Turbo	11/84 → 12/87	122	166							LG		[-]	**PF0116**	87×66,7×16,5	OK032
2000 i.e.Turbo	07/86 → 05/90	110	150							LG		[-]	**PF0116**	87×66,7×16,5	OK032

		KW	CV														
				SiS	i	W.i.	MAGNETI MARELLI	W×H×Th (mm)	Extra kit [Opt]	SiS	i	W.i.	MAGNETI MARELLI	W×H×Th (mm)	Extra kit [Opt]
LANCIA															
Thema Berlina / SW (834)															
2500 Turbo D	11/84 → 09/88	74	101							LG		[-]	**PF0116**	87×66,7×16,5	OK032
2500 Turbo DS	06/88 → 05/92	85	115							LG		[-]	**PF0116**	87×66,7×16,5	OK032
2500 Turbo DS	05/88 → 07/92	77	105							LG		[-]	**PF0116**	87×66,7×16,5	OK032
2500 Turbo DS	05/92 → 07/94	85	116							LG		[-]	**PF0116**	87×66,7×16,5	OK032
2850 V6 i.e.	06/88 → 05/92	108	147							LG		[-]	**PF0116**	87×66,7×16,5	OK032
2850 V6 i.e.	11/84 → 09/88	110	150							LG		[-]	**PF0116**	87×66,7×16,5	OK032
Thema SW (834)															
2000 i.e. 16V	05/89 → 08/92	108	147							LG		[-]	**PF0116**	87×66,7×16,5	OK032
2000 Turbo 16V	11/92 → 07/94	148	201							LG		[-]	**PF0116**	87×66,7×16,5	OK032
2000 i.e. 16V Turbo	12/88 → 06/90	133	181	LG	(834AC)	[+]	**PF0122**	129,9×59×19	OK030	LG		[-]	**PF0116**	87×66,7×16,5	OK032
2000 i.e. 16V Turbo	04/89 → 03/93	130	177	LG	(834AL)	[+]	**PF0122**	129,9×59×19	OK030	LG		[-]	**PF0116**	87×66,7×16,5	OK032
2500 Turbo DS	06/88 → 05/92	85	115	LG	(834AE)	[+]	**PF0122**	129,9×59×19	OK030	LG		[-]	**PF0116**	87×66,7×16,5	OK032
2500 Turbo DS	05/88 → 07/92	77	105	LG	(834AM)	[+]	**PF0122**	129,9×59×19	OK030	LG		[-]	**PF0116**	87×66,7×16,5	OK032
2500 Turbo DS	03/87 → 09/90	74	101	LG	(834D)	[+]	**PF0122**	129,9×59×19	OK030	LG		[-]	**PF0116**	87×66,7×16,5	OK032
2500 Turbo DS	09/92 → 07/94	85	116	LG	(834FE, 834LE)	[+]	**PF0122**	129,9×59×19	OK030	LG		[-]	**PF0116**	87×66,7×16,5	OK032
3000 V6	09/92 → 07/94	126	171	LG	(834GD, 834FD)	[+]	**PF0122**	129,9×59×19	OK030	LG		[-]	**PF0116**	87×66,7×16,5	OK032
Thema Ferrari (834F)															
8.32	09/87 → 05/89	158	215							LG		[-]	**PF0116**	87×66,7×16,5	OK032
8.32	10/87 → 05/92	151	205							LG		[-]	**PF0116**	87×66,7×16,5	OK032
Thesis (841AX)															
2.0 Turbo	07/02 →	136	185	LG	(841AXA1B03)	[+]	**PF0289**	146,6×59,5×18,9	OK037/ OK017	LG		[-]	**PF0114**	116,7×49,9×17,8	OK039/ OK085
2.4	07/02 →	125	170	LG	(841AXB1B00)	[+]	**PF0289**	146,6×59,5×18,9	OK037/ OK017	LG		[-]	**PF0114**	116,7×49,9×17,8	OK039/ OK085
2.4 D Multijet	04/06 →	136	185	LG		[+]	**PF0289**	146,6×59,5×18,9	OK037/ OK017	LG		[-]	**PF0114**	116,7×49,9×17,8	OK039/ OK085
2.4 JTD	05/03 →	129	175	LG		[+]	**PF0289**	146,6×59,5×18,9	OK037/ OK017	LG		[-]	**PF0114**	116,7×49,9×17,8	OK039/ OK085
2.4 JTD	07/02 →	110	150	LG	(841AXD1B02)	[+]	**PF0289**	146,6×59,5×18,9	OK037/ OK017	LG		[-]	**PF0114**	116,7×49,9×17,8	OK039/ OK085
3.0 V6	07/02 →	158	215	LG	(841AXC1101)	[+]	**PF0289**	146,6×59,5×18,9	OK037/ OK017	LG		[-]	**PF0114**	116,7×49,9×17,8	OK039/ OK085
3.2 V6	05/03 →	169	230	LG		[+]	**PF0289**	146,6×59,5×18,9	OK037/ OK017	LG		[-]	**PF0114**	116,7×49,9×17,8	OK039/ OK085
Voyager (MPV)															
2.8 CRD	09/11 →	120	163	ST		[-]	**PF0211**	146×64×18		LG		[-]	**PF0210**	116,7×52,6×17	
3.6 V6 VVT	09/11 →	211	287	ST		[-]	**PF0211**	146×64×18		LG		[-]	**PF0210**	116,7×52,6×17	

		KW	CV	SiS	i	W.i.	MAGNETI MARELLI	W×H×Th (mm)	Extra kit [Opt]	SiS	i	W.i.	MAGNETI MARELLI	W×H×Th (mm)	Extra kit [Opt]
LANCIA															
Y10 (156)															
Missoni	85→			LG		[+]	**PF0105**	104×66,4×17	OK030						
Turbo Martini	85→			LG		[+]	**PF0105**	104×66,4×17	OK030						
1.0 Turbo	03/85→02/89	62	84	LG	(156D)	[+]	**PF0105**	104×66,4×17	OK030						
1.0 Fire	03/85→02/90	37	50	BD		[+]	**PF0212**	108,8×47,4×18	OK028						
1.0 Fire	03/85→06/89	33	45	BD	(156AA)	[+]	**PF0212**	108,8×47,4×18	OK028						
1.0 Fire CAT	10/87→02/92	33	45	BD	(156AE)	[+]	**PF0212**	108,8×47,4×18	OK028						
1.0 Fire	06/85→06/91	32	44	BD	(156B, 156AD)	[+]	**PF0212**	108,8×47,4×18	OK028						
1.0 Fire	03/85→07/89	41	56	BD	(156C)	[+]	**PF0212**	108,8×47,4×18	OK028						
1.0 Fire 4WD	12/86→02/89	32	44	BD		[+]	**PF0212**	108,8×47,4×18	OK028						
1.0 Fire 4WD	12/87→02/90	37	50	BD		[+]	**PF0212**	108,8×47,4×18	OK028						
1.0 Fire 4WD	12/87→02/92	33	45	BD	(156AE)	[+]	**PF0212**	108,8×47,4×18	OK028						
1.1 Avenue	01/95→12/95	40	54	BD	(156AG)	[+]	**PF0212**	108,8×47,4×18	OK028						
1.1 Avenue 4WD	01/95→12/95	40	54	BD	(156AG)	[+]	**PF0212**	108,8×47,4×18	OK028						
1.1 i.e	08/89→06/92	42	57	BD	(156AC)	[+]	**PF0212**	108,8×47,4×18	OK028						
1.1 i.e 4WD	08/89→06/92	42	57	BD	(156AC)	[+]	**PF0212**	108,8×47,4×18	OK028						
1.1 i.e. Fire	07/89→09/95	37	50	BD	(156AG)	[+]	**PF0212**	108,8×47,4×18	OK028						
1.1 i.e. Fire 4WD	09/92→12/95	37	50	BD	(156AG)	[+]	**PF0212**	108,8×47,4×18	OK028						
1.3 i.e. Fire	11/87→05/93	56	76	BD	(156AB)	[+]	**PF0212**	108,8×47,4×18	OK028						
1.3 i.e. Fire	02/89→12/95	53	72	BD	(156AF)	[+]	**PF0212**	108,8×47,4×18	OK028						
Y (840A)															
1.1	11/95→09/03	40	54	BD	(840AE)/ +shim	[+]	**PF0218**	115×55,6×17	OK029/ OK094						
1.1	11/95→09/03	40	54	BD	(840AE)/ -shim	[+]	**PF0217**	115×55,6×17	OK029/ OK094						
1.1	11/95→09/03	40	54	LG	(840AE)	[+]	**PF0105**	104×66,4×17	OK030						
1.2	03/96→09/03	44	60	BD	(840AA, 840AF1A)/ +shim	[+]	**PF0218**	115×55,6×17	OK029/ OK094						
1.2	03/96→09/03	44	60	BD	(840AA, 840AF1A)/ -shim	[+]	**PF0217**	115×55,6×17	OK029/ OK094						
1.2	03/96→09/03	44	60	BD	(840AA, 840AF1A) -Francia	[-]	**PF0239**	151,4×52×18							
1.2 16V	04/97→09/03	63	86	BD	(840AD)/ +shim	[+]	**PF0218**	115×55,6×17	OK029/ OK094						
1.2 16V	04/97→09/03	63	86	BD	(840AD)/ -shim	[+]	**PF0217**	115×55,6×17	OK029/ OK094						
1.2 16V	10/00→09/03	59	80	LG	+ABS/ (840AG1A)	[+]	**PF0105**	104×66,4×17	OK030						

		KW	CV	SiS	i	W.i.	MAGNETI MARELLI	W×H×Th (mm)	Extra kit [Opt]	SiS	i	W.i.	MAGNETI MARELLI	W×H×Th (mm)	Extra kit [Opt]
LANCIA															
Y (840A)															
1.4 12V	10/96 → 09/03	59	80	LG	+ABS/ +AUT/ (840AB)	[+]	**PF0105**	104×66,4×17	OK030						
1.4 12V	03/96 → 09/03	55	75	LG	+ABS/ +AUT/ (840AC)	[+]	**PF0105**	104×66,4×17	OK030						
Ypsilon (843)															
1.2	10/03 → 08/06	44	60	LG	Vented disc	[-]	**PF0291**	116×56×16,5	OK039/ OK015						
1.2	10/03 → 08/06	44	60	LG	Solid disc	[-]	**PF0291**	116×56×16,5	OK039/ OK016						
1.2	10/03 → 08/06	59	80	LG	Vented disc	[-]	**PF0291**	116×56×16,5	OK039/ OK015						
1.2	10/03 → 08/06	59	80	LG	Solid disc	[-]	**PF0291**	116×56×16,5	OK039/ OK016						
1.3 JTD	10/03 → 08/06	51	70	LG	Vented disc	[-]	**PF0291**	116×56×16,5	OK039/ OK015						
1.3 JTD	10/03 → 08/06	51	70	LG	Solid disc	[-]	**PF0291**	116×56×16,5	OK039/ OK016						
1.4 16V	10/03 → 08/06	70	95	LG	Vented disc	[-]	**PF0291**	116×56×16,5	OK039/ OK015						
1.4 16V	10/03 → 08/06	70	95	LG	Solid disc	[-]	**PF0291**	116×56×16,5	OK039/ OK016						
Ypsilon (843) MY06															
1.2	08/10 →	51	69	LG	Vented disc	[+]	**PF0290**	116×56×16,5	OK039/ OK015						
1.2	08/10 →	51	69	LG	Solid disc	[+]	**PF0290**	116×56×16,5	OK039/ OK016						
1.2 16V	08 →			LG	Vented disc	[+]	**PF0290**	116×56×16,5	OK039/ OK015						
1.2 16V	08 →			LG	Solid disc	[+]	**PF0290**	116×56×16,5	OK039/ OK016						
1.3 D Multijet	09/06 →	55	75	LG	Vented disc	[+]	**PF0290**	116×56×16,5	OK039/ OK015						
1.3 D Multijet	09/06 →	55	75	LG	Solid disc	[+]	**PF0290**	116×56×16,5	OK039/ OK016						
1.3 D Multijet	09/06 →	66	90	LG	Vented disc	[+]	**PF0290**	116×56×16,5	OK039/ OK015						
1.3 D Multijet	09/06 →	66	90	LG	Solid disc	[+]	**PF0290**	116×56×16,5	OK039/ OK016						
1.3 D Multijet	05/07 →	77	105	LG	Vented disc	[+]	**PF0290**	116×56×16,5	OK039/ OK015						
1.3 D Multijet	05/07 →	77	105	LG	Solid disc	[+]	**PF0290**	116×56×16,5	OK039/ OK016						

		KW	CV	SiS	i	W.i.	MAGNETI MARELLI	W×H×Th (mm)	Extra kit [Opt]	SiS	i	W.i.	MAGNETI MARELLI	W×H×Th (mm)	Extra kit [Opt]
LANCIA															
Ypsilon (843) MY06															
1.4	02/06 →	57	78	LG	Vented disc	[+]	**PF0290**	116×56×16,5	OK039/ OK015						
1.4	02/06 →	57	78	LG	Solid disc	[+]	**PF0290**	116×56×16,5	OK039/ OK016						
1.4 LPG	11/10 →	57	78	LG	Vented disc	[+]	**PF0290**	116×56×16,5	OK039/ OK015						
1.4 LPG	11/10 →	57	78	LG	Solid disc	[+]	**PF0290**	116×56×16,5	OK039/ OK016						
Ypsilon (846)															
0.9 Twinair	12/13 →	59	80	ATE	+2 w.i.	[+]	**PF0428**	149,3×52,5×17,4							
0.9 CNG	05/11 →	63	86	ATE	+2 w.i.	[+]	**PF0428**	149,3×52,5×17,4							
0.9 Twinair	05/11 →	63	86	ATE	+2 w.i.	[+]	**PF0428**	149,3×52,5×17,4							
0.9 T.Air Metano	12 →	63	80	ATE	+2 w.i.	[+]	**PF0428**	149,3×52,5×17,4							
1.2	05/11 →	51	69	ATE	+2 w.i.	[+]	**PF0428**	149,3×52,5×17,4							
1.2 Bifuel	05/11 →	49	67	ATE	+2 w.i.	[+]	**PF0428**	149,3×52,5×17,4							
1.3 Multijet	05/11 →	70	95	ATE	+2 w.i.	[+]	**PF0428**	149,3×52,5×17,4							
Z (220)															
2.0 16V	05/98 → 07/00	97	132	LG	(220AL5)	[+]	**PF0787**	129,9×59×19	OK030	ATE		[+]	**PF0788**	123,1×43,1×17	
2.0 16V	07/00 → 09/02	100	136	LG	(220AQ5)	[+]	**PF0787**	129,9×59×19	OK030	ATE		[+]	**PF0788**	123,1×43,1×17	
2.0 JTD	04/00 → 09/02	80	109	LG		[+]	**PF0787**	129,9×59×19	OK030	ATE		[+]	**PF0788**	123,1×43,1×17	
2.0 JTD	09/99 → 09/02	80	109	LG	(220AN5)	[+]	**PF0787**	129,9×59×19	OK030	ATE		[+]	**PF0788**	123,1×43,1×17	
2.0 Turbo	05/95 → 09/02	108	147	LG	(220AD5, 220CD5)	[+]	**PF0787**	129,9×59×19	OK030	ATE		[+]	**PF0788**	123,1×43,1×17	
2.1 TD	05/96 → 09/99	80	109	LG	(220AJ5)	[+]	**PF0787**	129,9×59×19	OK030	ATE		[+]	**PF0788**	123,1×43,1×17	
All types	05/98 → 09/02			LG		[+]	**PF0787**	129,9×59×19	OK030	ATE		[-]	**PF0242**	123,1×43,1×17	
LAND ROVER															
Freeland Soft Top															
1.8 i 16V	02/98 → 10/06	88	120	LG	4x4	[+]	**PF0484**	129,2×69,7×18	OK037						
1.8	02/98 → 10/06	86	117	LG	4x4	[+]	**PF0484**	129,2×69,7×18	OK037						
2.0 DI	02/98 → 10/06	72	98	LG	4x4	[+]	**PF0484**	129,2×69,7×18	OK037						
2.0 TD4	02/98 → 10/06	82	112	LG	4x4	[+]	**PF0484**	129,2×69,7×18	OK037						
Freeland (LN)															
1.8 16V	11/00 →	86	117	LG		[+]	**PF0484**	129,2×69,7×18	OK037						
1.8 i 16V	02/98 → 11/00	88	120	LG		[+]	**PF0484**	129,2×69,7×18	OK037						
2.0 DI	02/98 → 11/00	72	98	LG		[+]	**PF0484**	129,2×69,7×18	OK037						
2.0 Td4	11/00 →	82	112	LG		[+]	**PF0484**	129,2×69,7×18	OK037						
2.0 Td4	11/01 →	80	109	LG		[+]	**PF0484**	129,2×69,7×18	OK037						
2.5 V6	11/00 →	130	177	LG		[+]	**PF0484**	129,2×69,7×18	OK037						

		KW	CV	SiS	i	W.i.	MAGNETI MARELLI	W×H×Th (mm)	Extra kit [Opt]	SiS	i	W.i.	MAGNETI MARELLI	W×H×Th (mm)	Extra kit [Opt]
LAND ROVER															
Freelander (FA)															
2.2 SD4	08/10→	140	190	ATE		[-]	**PF0263**	155,2×66,6×19,2		LG		[-]	**PF0257**	95,2×43,2×15,8	OK030/ OK082
2.2 TD4	08/10→	110	150	ATE		[-]	**PF0263**	155,2×66,6×19,2		LG		[-]	**PF0257**	95,2×43,2×15,8	OK030/ OK082
2.2 TD4	10/06→	118	160	ATE		[-]	**PF0263**	155,2×66,6×19,2		LG		[-]	**PF0257**	95,2×43,2×15,8	OK030/ OK082
2.2 TD4	01/07→	112	152	ATE		[-]	**PF0263**	155,2×66,6×19,2		LG		[-]	**PF0257**	95,2×43,2×15,8	OK030/ OK082
2.2 TD4 4x4	10/06→	110	150	ATE		[-]	**PF0263**	155,2×66,6×19,2		LG		[-]	**PF0257**	95,2×43,2×15,8	OK030/ OK082
2.2 TD4 4x4	10/06→	115	156	ATE		[-]	**PF0263**	155,2×66,6×19,2		LG		[-]	**PF0257**	95,2×43,2×15,8	OK030/ OK082
3.2	10/06→	171	233	ATE		[-]	**PF0263**	155,2×66,6×19,2		LG		[-]	**PF0257**	95,2×43,2×15,8	OK030/ OK082
3.2 i6 HSE 4x4	10/06→	170	231	ATE		[-]	**PF0263**	155,2×66,6×19,2		LG		[-]	**PF0257**	95,2×43,2×15,8	OK030/ OK082
Range Rover III (LM)															
3.0 TD 6	03/02→	130	177	ATE		[o]	**PF0580**	155,4×73,5×19		ATE		[o]	**PF0152**	123,1×59,2×17	
4.4	03/02→	210	286	ATE		[o]	**PF0580**	155,4×73,5×19		ATE		[o]	**PF0152**	123,1×59,2×17	
Range Rover Evoque															
2.0	06/11→	177	241	ATE		[-]	**PF0263**	155,2×66,6×19,2		LG	+EPB	[-]	**PF0264**	106,3×48,6×16,8	OK030/ OK083
2.2	06/11→	110	150	ATE		[-]	**PF0263**	155,2×66,6×19,2		LG	+EPB	[-]	**PF0264**	106,3×48,6×16,8	OK030/ OK083
2.2 SD4	06/11→	140	190	ATE		[-]	**PF0263**	155,2×66,6×19,2		LG	+EPB	[-]	**PF0264**	106,3×48,6×16,8	OK030/ OK083
2.2 TD4	06/11→	110	150	ATE		[-]	**PF0263**	155,2×66,6×19,2		LG	+EPB	[-]	**PF0264**	106,3×48,6×16,8	OK030/ OK083
LEYLAND															
Road Runner															
T45	86→			BR	(10.12)	[+]	**PF0477**	164,8×68×20							
LEXUS															
ES (AVV6_, GSV6_, ASV6_)															
250	06/12→	135	184	AK		[-]	**PF0641**	157,7×56,9×17,6		AK		[-]	**PF0633**	96,8×49,2×15,4	
350	06/12→	204	277	AK		[-]	**PF0641**	157,7×56,9×17,6		AK		[-]	**PF0633**	96,8×49,2×15,4	
300h	06/12→	118	160	AK		[-]	**PF0641**	157,7×56,9×17,6		AK		[-]	**PF0633**	96,8×49,2×15,4	
GS (GRS;UZS;GWS)															
300	→11/11									AK		[+]	**PF0638**	88,1×58×15,5	
350	→11/11									AK		[+]	**PF0638**	88,1×58×15,5	
350 AWD	→11/11									AK		[+]	**PF0638**	88,1×58×15,5	
430	→11/11									AK		[+]	**PF0638**	88,1×58×15,5	
450	→11/11									AK		[+]	**PF0638**	88,1×58×15,5	

		KW	CV												
				SiS	i	W.i.	MAGNETI MARELLI	W×H×Th (mm)	Extra kit [Opt]	SiS	i	W.i.	MAGNETI MARELLI	W×H×Th (mm)	Extra kit [Opt]
LEXUS															
GS (GRS;UZS;GWS)															
460	→ 11/11									AK		[+]	**PF0638**	88,1×58×15,5	
IS II (GSE_;ALE_;USE_)															
200d	07/10 →	110	150	AK		[-]	**PF0637**	154,6×59,5×17,8		AK		[+]	**PF0638**	88,1×58×15,5	
220 d	10/05 →	130	177	AK	(ALE20)	[-]	**PF0637**	154,6×59,5×17,8		AK		[+]	**PF0638**	88,1×58×15,5	
250	10/05 →	158	215	AK		[-]	**PF0637**	154,6×59,5×17,8		AK		[+]	**PF0638**	88,1×58×15,5	
250	10/05 →	153	208	AK	(GSE20)	[-]	**PF0637**	154,6×59,5×17,8		AK		[+]	**PF0638**	88,1×58×15,5	
250 AWD	10/05 →	158	215	AK		[-]	**PF0637**	154,6×59,5×17,8		AK		[+]	**PF0638**	88,1×58×15,5	
350	09/10 →	234	318	AK		[-]	**PF0637**	154,6×59,5×17,8		AK		[+]	**PF0638**	88,1×58×15,5	
350	10/05 →	228	310	AK		[-]	**PF0637**	154,6×59,5×17,8		AK		[+]	**PF0638**	88,1×58×15,5	
IS F	03/08 →	311	423	AK	(USE20)	[-]	**PF0637**	154,6×59,5×17,8		AK		[+]	**PF0638**	88,1×58×15,5	
RX (GY_)															
350 AWD	12/08 →	204	277	ST		[-]	**PF0634**	167×59,4×17,5		ST		[-]	**PF0636**	115,1×45,6×15	
450H	12/08 →	183	249	ST		[-]	**PF0634**	167×59,4×17,5		ST		[-]	**PF0636**	115,1×45,6×15	
450H AWD	12/08 →	183	249	ST		[-]	**PF0634**	167×59,4×17,5		ST		[-]	**PF0636**	115,1×45,6×15	
LOTUS															
Elan															
1.6 i 16V	09/89 → 11/95	97	132	DM		[-]	**PF0354**	100×59×15,6							
1.6 i 16V Turbo	09/89 → 11/95	123	167	DM		[-]	**PF0354**	100×59×15,6							
1.6 i 16V Turbo	09/91 → 11/95	115	156	DM		[-]	**PF0354**	100×59×15,6							
MASERATI															
Ghibli II															
2.0	05/92 → 09/94	236	321							ATE		[o]	**PF0485**	123,1×59,2×17	
2.0 24V Biturbo	05/92 →	225	306							ATE		[o]	**PF0485**	123,1×59,2×17	
2.8 24V Biturbo	06/92 →	209	284							ATE		[o]	**PF0485**	123,1×59,2×17	
Quattroporte II															
2.0 Biturbo	03/94 →	211	287							ATE		[o]	**PF0485**	123,1×59,2×17	
2.8	10/98 → 10/99	206	280							ATE		[o]	**PF0485**	123,1×59,2×17	
2.8 Biturbo	03/94 →	209	284							ATE		[o]	**PF0485**	123,1×59,2×17	
3.2 V8 32V	12/95 →	247	336							ATE		[o]	**PF0485**	123,1×59,2×17	
MAZDA															
121 (DA)															
1.1	10/87 → 10/90	42	57	ATE		[-]	**PF0248**	151,3×46,4×18							
1.3	10/87 → 11/90	44	60	ATE		[-]	**PF0248**	151,3×46,4×18							
1.3	04/89 → 10/90	40	55	ATE		[-]	**PF0248**	151,3×46,4×18							
1.3	11/87 → 10/90	48	65	ATE		[-]	**PF0248**	151,3×46,4×18							
1.5	11/87 → 03/89	56	76	ATE		[-]	**PF0248**	151,3×46,4×18							
121 II (DB)															
1.1	11/90 → 10/93	40	54	ATE		[-]	**PF0250**	141,4×44,6×17,5							
1.1	11/90 → 10/93	40	54	ST		[+]	**PF0286**	91,6×64×15							
1.3 16V	11/90 → 03/96	39	53	ATE		[-]	**PF0250**	141,4×44,6×17,5							
1.3 16V	11/90 → 03/96	39	53	ST		[+]	**PF0286**	91,6×64×15							

		KW	CV	SiS	i	W.i.	MAGNETI MARELLI	W×H×Th (mm)	Extra kit [Opt]	SiS	i	W.i.	MAGNETI MARELLI	W×H×Th (mm)	Extra kit [Opt]
MAZDA															
121 II (DB)															
1.3 i 16V	11/90 → 03/96	53	72	ATE		[-]	**PF0250**	141,4×44,6×17,5							
1.3 i 16V	11/90 → 03/96	53	72	ST		[+]	**PF0286**	91,6×64×15							
1.5 i	11/93 → 05/97	92	125	ATE		[-]	**PF0250**	141,4×44,6×17,5							
1.5 i	11/93 → 05/97	92	125	ST		[+]	**PF0286**	91,6×64×15							
121 III (JASM, JBSM)															
1.25	03/96 →	55	75	ATE	+ABS	[-]	**PF0252**	150,3×58×18,6							
1.3	03/96 →	37	50	ATE		[-]	**PF0251**	150,3×51×18,6							
1.3	03/96 →	44	60	ATE	+ABS	[-]	**PF0252**	150,3×58×18,6							
1.8 D	03/96 →	44	60	ATE		[-]	**PF0251**	150,3×51×18,6							
2 (DY)															
1.2	02/03 →	55	75	ATE	+ABS	[-]	**PF0252**	150,3×58×18,6							
1.25	04/03 →	55	75	ATE	+ABS	[-]	**PF0252**	150,3×58×18,6							
1.3 L	04/03 →	67	91	ATE	+ABS	[-]	**PF0252**	150,3×58×18,6							
1.4	04/03 →	59	80	ATE	+ABS	[-]	**PF0252**	150,3×58×18,6							
1.4	02/03 →	59	80	ATE	+ABS	[-]	**PF0252**	150,3×58×18,6							
1.4 CD	04/03 →	50	68	ATE	+ABS	[-]	**PF0252**	150,3×58×18,6							
1.5	04/03 →	82	111	ATE	+ABS	[-]	**PF0252**	150,3×58×18,6							
1.6	04/03 →	74	100	ATE	+ABS	[-]	**PF0252**	150,3×58×18,6							
1.6	02/03 →	74	101	ATE	+ABS	[-]	**PF0252**	150,3×58×18,6							
2 II (DE)															
1.3	10/07 →	55	75	LG	Ø Disc 258	[-]	**PF0254**	125,7×51.4×16,5	OK033/ OK084						
1.3	10/07 →	55	75	LG	Ø Disc 258	[+]	**PF0684**	125,7×51.4×16,5	OK033/ OK084						
1.3	10/07 →	63	86	LG	Ø Disc 258	[-]	**PF0254**	125,7×51.4×16,5	OK033/ OK084						
1.3	10/07 →	63	86	LG	Ø Disc 258	[+]	**PF0684**	125,7×51.4×16,5	OK033/ OK084						
1.3 MZR	01/10 →	62	84	LG	Ø Disc 258	[+]	**PF0684**	125,7×51.4×16,5	OK033/ OK084						
1.4 MZR-CD	01/08 →	50	68	LG	Ø Disc 258	[-]	**PF0254**	125,7×51.4×16,5	OK033/ OK084						
1.4 MZR-CD	01/08 →	50	68	LG	Ø Disc 258	[+]	**PF0684**	125,7×51.4×16,5	OK033/ OK084						
1.5	10/07 →	76	103	LG	Ø Disc 258	[-]	**PF0254**	125,7×51.4×16,5	OK033/ OK084						
1.5	10/07 →	76	103	LG	Ø Disc 258	[+]	**PF0684**	125,7×51.4×16,5	OK033/ OK084						
1.5 MZR	06/11 →	75	102	LG	Ø Disc 258	[+]	**PF0684**	125,7×51.4×16,5	OK033/ OK084						
1.6 MZ-CD	10/08 →	66	90	LG	Ø Disc 258	[-]	**PF0254**	125,7×51.4×16,5	OK033/ OK084						
1.6 MZ-CD	10/08 →	66	90	LG	Ø Disc 258	[+]	**PF0684**	125,7×51.4×16,5	OK033/ OK084						

		KW	CV												
				SiS	i	W.i.	MAGNETI MARELLI	W×H×Th (mm)	Extra kit [Opt]	SiS	i	W.i.	MAGNETI MARELLI	W×H×Th (mm)	Extra kit [Opt]
MAZDA															
2 II (DE)															
1.6 MZ-CD	06/11 →	70	95	LG	Ø Disc 258	[+]	**PF0684**	125,7×51.4×16,5	OK033/ OK084						
3 (BK)															
1.4	02/04 → 06/09	59	80	ATE		[-]	**PF0244**	155,2×62,3×18,2		ATE		[-]	**PF0569**	123,1×52×16,4	
1.4	02/04 → 06/09	59	80	ATE		[-]	**PF0244**	155,2×62,3×18,2		ATE		[-]	**PF0431**	123,1×52×16,4	
1.4	10/03 → 06/09	62	84	ATE		[-]	**PF0244**	155,2×62,3×18,2		ATE		[-]	**PF0569**	123,1×52×16,4	
1.4	10/03 → 06/09	62	84	ATE		[-]	**PF0244**	155,2×62,3×18,2		ATE		[-]	**PF0431**	123,1×52×16,4	
1.6	10/03 → 06/09	77	105	ATE		[-]	**PF0244**	155,2×62,3×18,2		ATE		[-]	**PF0569**	123,1×52×16,4	
1.6	10/03 → 06/09	77	105	ATE		[-]	**PF0244**	155,2×62,3×18,2		ATE		[-]	**PF0431**	123,1×52×16,4	
1.6 DI Turbo	06/04 → 06/09	80	109	ATE		[-]	**PF0244**	155,2×62,3×18,2		ATE		[-]	**PF0569**	123,1×52×16,4	
1.6 DI Turbo	06/04 → 06/09	80	109	ATE		[-]	**PF0244**	155,2×62,3×18,2		ATE		[-]	**PF0431**	123,1×52×16,4	
2.0	10/03 → 06/09	110	150	ATE		[-]	**PF0244**	155,2×62,3×18,2		ATE		[-]	**PF0569**	123,1×52×16,4	
2.0	10/03 → 06/09	110	150	ATE		[-]	**PF0244**	155,2×62,3×18,2		ATE		[-]	**PF0431**	123,1×52×16,4	
2.0	04/04 → 06/06	104	141	ATE		[-]	**PF0244**	155,2×62,3×18,2		ATE		[-]	**PF0569**	123,1×52×16,4	
2.0	04/04 → 06/06	104	141	ATE		[-]	**PF0244**	155,2×62,3×18,2		ATE		[-]	**PF0431**	123,1×52×16,4	
2.0 MZR-CD	12/06 → 06/09	105	143	ATE		[-]	**PF0244**	155,2×62,3×18,2		ATE		[-]	**PF0569**	123,1×52×16,4	
2.0 MZR-CD	12/06 → 06/09	105	143	ATE		[-]	**PF0244**	155,2×62,3×18,2		ATE		[-]	**PF0431**	123,1×52×16,4	
2.3 DiSi Turbo MPS	06/06 → 06/09	184	250	ATE		[-]	**PF0608**	156,5×72,9×18,5		ATE		[-]	**PF0569**	123,1×52×16,4	
2.3 DiSi Turbo MPS	06/06 → 06/09	184	250	ATE		[-]	**PF0608**	156,5×72,9×18,5		ATE		[-]	**PF0431**	123,1×52×16,4	
2.3 MPS	12/06 → 06/09	191	260	ATE		[-]	**PF0608**	156,5×72,9×18,5		ATE		[-]	**PF0569**	123,1×52×16,4	
2.3 MPS	12/06 → 06/09	191	260	ATE		[-]	**PF0608**	156,5×72,9×18,5		ATE		[-]	**PF0431**	123,1×52×16,4	
2.3 MZR	03/04 → 03/09	115	156	ATE		[-]	**PF0244**	155,2×62,3×18,2		ATE		[-]	**PF0569**	123,1×52×16,4	
2.3 MZR	03/04 → 03/09	115	156	ATE		[-]	**PF0244**	155,2×62,3×18,2		ATE		[-]	**PF0431**	123,1×52×16,4	
2.3 MZR Sport	10/03 → 06/09	126	171	ATE		[-]	**PF0244**	155,2×62,3×18,2		ATE		[-]	**PF0569**	123,1×52×16,4	
2.3 MZR Sport	10/03 → 06/09	126	171	ATE		[-]	**PF0244**	155,2×62,3×18,2		ATE		[-]	**PF0431**	123,1×52×16,4	
3 (BK) 3-Volumi															
1.6	02/04 → 06/09	77	105	ATE		[-]	**PF0244**	155,2×62,3×18,2		ATE		[-]	**PF0431**	123,1×52×16,4	
1.6 DI Turbo	06/04 → 06/09	80	109	ATE		[-]	**PF0244**	155,2×62,3×18,2		ATE		[-]	**PF0431**	123,1×52×16,4	
2.0	02/04 → 06/09	110	150	ATE		[-]	**PF0244**	155,2×62,3×18,2		ATE		[-]	**PF0431**	123,1×52×16,4	
2.0	04/04 → 06/06	104	141	ATE		[-]	**PF0244**	155,2×62,3×18,2		ATE		[-]	**PF0431**	123,1×52×16,4	
2.0 MZR-CD	12/06 → 06/09	105	143	ATE		[-]	**PF0244**	155,2×62,3×18,2		ATE		[-]	**PF0431**	123,1×52×16,4	
2.3	06/00 → 03/03	126	171	ATE		[-]	**PF0608**	156,5×72,9×18,5		ATE		[-]	**PF0431**	123,1×52×16,4	
2.3	03/04 → 03/09	118	160	ATE		[-]	**PF0608**	156,5×72,9×18,5		ATE		[-]	**PF0431**	123,1×52×16,4	
3 (BL_)															
1.6 MZR	06/09 →	77	105	ATE		[-]	**PF0244**	155,2×62,3×18,2		ATE		[-]	**PF0431**	123,1×52×16,4	
1.6 MZR CD	11/10 →	85	116	ATE		[-]	**PF0244**	155,2×62,3×18,2		ATE		[-]	**PF0431**	123,1×52×16,4	
1.6 MZR-CD	06/09 →	80	109	ATE		[-]	**PF0244**	155,2×62,3×18,2		ATE		[-]	**PF0431**	123,1×52×16,4	
2.0 MZR	06/09 →	110	150	ATE		[-]	**PF0244**	155,2×62,3×18,2		ATE		[-]	**PF0431**	123,1×52×16,4	
2.0 MZR DISI	06/09 →	111	151	ATE		[-]	**PF0244**	155,2×62,3×18,2		ATE		[-]	**PF0431**	123,1×52×16,4	
2.2 MZR-CD	06/09 →	110	150	ATE		[-]	**PF0244**	155,2×62,3×18,2		ATE		[-]	**PF0431**	123,1×52×16,4	
2.2 MZR-CD	06/09 →	136	185	ATE		[-]	**PF0244**	155,2×62,3×18,2		ATE		[-]	**PF0431**	123,1×52×16,4	
2.3 MPS Turbo	06/09 →	191	260	ATE		[-]	**PF0244**	155,2×62,3×18,2		ATE		[-]	**PF0431**	123,1×52×16,4	

		KW	CV												
				SiS	i	W.i.	MAGNETI MARELLI	W×H×Th (mm)	Extra kit [Opt]	SiS	i	W.i.	MAGNETI MARELLI	W×H×Th (mm)	Extra kit [Opt]
MAZDA															
3 (BL_)															
2.5	06/09→	122	166	ATE		[-]	**PF0244**	155,2×62,3×18,2		ATE		[-]	**PF0431**	123,1×52×16,4	
3 3-Volumi (BL)															
1.6 MZR	06/09→	77	105	ATE		[-]	**PF0244**	155,2×62,3×18,2		ATE		[-]	**PF0431**	123,1×52×16,4	
1.6 MZR CD	11/10→	85	116	ATE		[-]	**PF0244**	155,2×62,3×18,2		ATE		[-]	**PF0431**	123,1×52×16,4	
2.0 MZR	06/09→	110	150	ATE		[-]	**PF0244**	155,2×62,3×18,2		ATE		[-]	**PF0431**	123,1×52×16,4	
2.0 MZR DISI	06/09→	111	151	ATE		[-]	**PF0244**	155,2×62,3×18,2		ATE		[-]	**PF0431**	123,1×52×16,4	
2.2 MZR-CD	06/09→	110	150	ATE		[-]	**PF0244**	155,2×62,3×18,2		ATE		[-]	**PF0431**	123,1×52×16,4	
2.2 MZR-CD	06/09→	136	185	ATE		[-]	**PF0244**	155,2×62,3×18,2		ATE		[-]	**PF0431**	123,1×52×16,4	
2.5	06/09→	122	166	ATE		[-]	**PF0244**	155,2×62,3×18,2		ATE		[-]	**PF0431**	123,1×52×16,4	
3 Skyaktiv (BM)															
Skyaktiv-D 150	09/13→	110	150	AK		[+]	**PF0808**	142×55,7×15,8		AK		[+]	**PF0809**	101,4×44,6×13,8	
Skyaktiv-G 100	09/13→	74	100	AK		[+]	**PF0808**	142×55,7×15,8		AK		[+]	**PF0809**	101,4×44,6×13,8	
Skyaktiv-G 120	09/13→	88	120	AK		[+]	**PF0808**	142×55,7×15,8		AK		[+]	**PF0809**	101,4×44,6×13,8	
Skyaktiv-G 165	09/13→	121	165	AK		[+]	**PF0808**	142×55,7×15,8		AK		[+]	**PF0809**	101,4×44,6×13,8	
3 Skyaktiv 3 volumi (BM)															
Skyaktiv-D 150	09/13→	110	150	AK		[+]	**PF0808**	142×55,7×15,8		AK		[+]	**PF0809**	101,4×44,6×13,8	
Skyaktiv-G 120	09/13→	88	120	AK		[+]	**PF0808**	142×55,7×15,8		AK		[+]	**PF0809**	101,4×44,6×13,8	
2.0	09/13→	116	158	AK		[+]	**PF0808**	142×55,7×15,8		AK		[+]	**PF0809**	101,4×44,6×13,8	
2.5	09/13→	125	170	AK		[+]	**PF0808**	142×55,7×15,8		AK		[+]	**PF0809**	101,4×44,6×13,8	
323															
1.3i 16V	89→			ST		[+]	**PF0286**	91,6×64×15							
1.6i 16V	89→			ST		[+]	**PF0286**	91,6×64×15							
1.7 D	89→			ST		[+]	**PF0286**	91,6×64×15							
1.8i 16V	89→91			ST		[+]	**PF0286**	91,6×64×15							
323F															
1.6i 16V	89→91			ST		[+]	**PF0286**	91,6×64×15							
1.6i 16V GLX Coupé	91→05			ST		[+]	**PF0286**	91,6×64×15							
1.8i 16V Coupé GT	89→91			ST	DOHC	[+]	**PF0286**	91,6×64×15							
323F VI (BJ)															
1.4i 16V	98→05			ST		[+]	**PF0293**	123×51,8×15,5							
1.5i 16V	98→05			ST		[+]	**PF0293**	123×51,8×15,5							
1.8i 16V	98→05			ST		[+]	**PF0293**	123×51,8×15,5							
2.0	01→05			ST		[+]	**PF0466**	131,8×56,2×16,1							
2.0 DiDT	98→05			ST		[+]	**PF0293**	123×51,8×15,5							
323P (BA)															
1.3 16V	10/96→	54	73	ST		[+]	**PF0293**	123×51,8×15,5							
1.5 16V	10/96→	65	88	ST		[+]	**PF0293**	123×51,8×15,5							
323S VI (BJ)															
1.4i 16V	98→			ST		[+]	**PF0293**	123×51,8×15,5							
1.5i 16V	98→			ST		[+]	**PF0293**	123×51,8×15,5							
1.8i 16V	98→			ST		[+]	**PF0293**	123×51,8×15,5							
2.0 DiDT	98→			ST		[+]	**PF0293**	123×51,8×15,5							

		KW	CV	SiS	i	W.i.	MAGNETI MARELLI	W×H×Th (mm)	Extra kit [Opt]	SiS	i	W.i.	MAGNETI MARELLI	W×H×Th (mm)	Extra kit [Opt]
MAZDA															
323 Van															
1.7D Van	89→			ST		[+]	**PF0286**	91,6×64×15							
1.7D Wagon	89→			ST		[+]	**PF0286**	91,6×64×15							
5 (CR19)															
1.8	03/05→	85	116	ATE		[-]	**PF0244**	155,2×62,3×18,2		ATE		[-]	**PF0569**	123,1×52×16,4	
1.8	03/05→	85	116	ATE		[-]	**PF0244**	155,2×62,3×18,2		ATE		[-]	**PF0569**	123,1×52×16,4	
2.0	03/05→	107	146	ATE		[-]	**PF0244**	155,2×62,3×18,2		ATE		[-]	**PF0569**	123,1×52×16,4	
2.0	03/05→	107	146	ATE		[-]	**PF0244**	155,2×62,3×18,2		ATE		[-]	**PF0569**	123,1×52×16,4	
2.0 CD	03/05→	81	110	ATE		[-]	**PF0244**	155,2×62,3×18,2		ATE		[-]	**PF0569**	123,1×52×16,4	
2.0 CD	03/05→	81	110	ATE		[-]	**PF0244**	155,2×62,3×18,2		ATE		[-]	**PF0569**	123,1×52×16,4	
2.0 CD	06/05→	105	143	ATE		[-]	**PF0244**	155,2×62,3×18,2		ATE		[-]	**PF0569**	123,1×52×16,4	
2.0 CD	06/05→	105	143	ATE		[-]	**PF0244**	155,2×62,3×18,2		ATE		[-]	**PF0569**	123,1×52×16,4	
2.3	02/05→	122	166	ATE		[-]	**PF0244**	155,2×62,3×18,2		ATE		[-]	**PF0569**	123,1×52×16,4	
2.3	02/05→	122	166	ATE		[-]	**PF0244**	155,2×62,3×18,2		ATE		[-]	**PF0569**	123,1×52×16,4	
6 Berlina (GG)															
1.8	08/02→08/07	88	120	ST		[+]	**PF0465**	131,2×56×17,1		AK		[-]	**PF0294**	107,8×39,4×13,1	
2.0	06/02→08/07	104	141	AK		[+]	**PF0295**	132×59,5×18,5		AK		[-]	**PF0294**	107,8×39,4×13,1	
2.0	06/02→08/07	104	141	AK		[+]	**PF0295**	132×59,5×18,5							
2.0	03/05→08/07	108	147	AK		[+]	**PF0295**	132×59,5×18,5		AK		[-]	**PF0294**	107,8×39,4×13,1	
2.0	03/05→08/07	108	147	AK		[+]	**PF0295**	132×59,5×18,5							
2.0 TDci	06/02→08/07			AK		[+]	**PF0295**	132×59,5×18,5		AK		[-]	**PF0294**	107,8×39,4×13,1	
2.0 TDci	06/02→08/07			AK		[+]	**PF0295**	132×59,5×18,5							
2.3i 16V	06/02→08/07			AK		[+]	**PF0295**	132×59,5×18,5		AK		[-]	**PF0294**	107,8×39,4×13,1	
2.3i 16V S	06/02→08/07			AK		[+]	**PF0295**	132×59,5×18,5							
2.3 MPS Turbo	12/05→08/07	191	260							AK		[-]	**PF0294**	107,8×39,4×13,1	
6 SW (GY)															
1.8	08/02→12/07	88	120	ST		[+]	**PF0465**	131,2×56×17,1		AK		[-]	**PF0294**	107,8×39,4×13,1	
2.0	08/02→12/07	104	141	AK		[+]	**PF0295**	132×59,5×18,5		AK		[-]	**PF0294**	107,8×39,4×13,1	
2.0	08/02→12/07	104	141	AK		[+]	**PF0295**	132×59,5×18,5							
2.0	03/05→12/07	108	147	AK		[+]	**PF0295**	132×59,5×18,5		AK		[-]	**PF0294**	107,8×39,4×13,1	
2.0	03/05→12/07	108	147	AK		[+]	**PF0295**	132×59,5×18,5							
2.0 CiTD 4x4	10/02→12/07	89	121	AK		[+]	**PF0295**	132×59,5×18,5		AK		[-]	**PF0294**	107,8×39,4×13,1	
2.0 CiTD 4x4	10/02→12/07	89	121	AK		[+]	**PF0295**	132×59,5×18,5							
2.0 CiTD 4x4	10/02→12/07	100	136	AK		[+]	**PF0295**	132×59,5×18,5		AK		[-]	**PF0294**	107,8×39,4×13,1	
2.0 CiTD 4x4	10/02→12/07	100	136	AK		[+]	**PF0295**	132×59,5×18,5							
2.0 DI	08/02→12/07	100	136	AK		[+]	**PF0295**	132×59,5×18,5		AK		[-]	**PF0294**	107,8×39,4×13,1	
2.0 DI	08/02→12/07	100	136	AK		[+]	**PF0295**	132×59,5×18,5							
2.0 DI	08/02→12/07	89	121	AK		[+]	**PF0295**	132×59,5×18,5		AK		[-]	**PF0294**	107,8×39,4×13,1	
2.0 DI	08/02→12/07	89	121	AK		[+]	**PF0295**	132×59,5×18,5							
2.0 DI	06/05→12/07	105	143	AK		[+]	**PF0295**	132×59,5×18,5		AK		[-]	**PF0294**	107,8×39,4×13,1	
2.0 DI	06/05→12/07	105	143	AK		[+]	**PF0295**	132×59,5×18,5							
2.3	08/02→12/07	122	166	AK		[+]	**PF0295**	132×59,5×18,5		AK		[-]	**PF0294**	107,8×39,4×13,1	
2.3	08/02→12/07	122	166	AK		[+]	**PF0295**	132×59,5×18,5							
6 II Berlina (GH)															
1.8 MZR	08/07→	88	120	AK		[+]	**PF0699**	136,9×58,8×16,4		AK		[-]	**PF0294**	107,8×39,4×13,1	

		KW	CV													
				SiS	i	W.i.	MAGNETI MARELLI	W×H×Th (mm)	Extra kit [Opt]	SiS	i	W.i.	MAGNETI MARELLI	W×H×Th (mm)	Extra kit [Opt]
MAZDA															
6 SW (GY)															
2.0 MZR	08/07→	108	147	AK		[+]	PF0699	136,9×58,8×16,4		AK		[-]	PF0294	107,8×39,4×13,1	
2.0 MZR	01/10→	114	155	AK		[+]	PF0699	136,9×58,8×16,4		AK		[-]	PF0294	107,8×39,4×13,1	
2.0 MZR-CD	08/07→	103	140	AK		[+]	PF0699	136,9×58,8×16,4							
2.2 D	01/10→	95	129	AK		[+]	PF0699	136,9×58,8×16,4		AK		[-]	PF0294	107,8×39,4×13,1	
2.2 D	01/10→	132	180	AK		[+]	PF0699	136,9×58,8×16,4		AK		[-]	PF0294	107,8×39,4×13,1	
2.2 MZR-CD	01/09→	92	125	AK		[+]	PF0699	136,9×58,8×16,4		AK		[-]	PF0294	107,8×39,4×13,1	
2.2 MZR-CD	01/09→	120	163	AK		[+]	PF0699	136,9×58,8×16,4		AK		[-]	PF0294	107,8×39,4×13,1	
2.2 MZR-CD	01/09→	136	185	AK		[+]	PF0699	136,9×58,8×16,4		AK		[-]	PF0294	107,8×39,4×13,1	
2.5 MZR	08/07→	125	170	AK		[+]	PF0699	136,9×58,8×16,4		AK		[-]	PF0294	107,8×39,4×13,1	
6 II SW (GH)															
1.8 MZR	02/08→	88	120	AK		[+]	PF0699	136,9×58,8×16,4		AK		[-]	PF0294	107,8×39,4×13,1	
2.0 MZR	01/10→	114	155	AK		[+]	PF0699	136,9×58,8×16,4		AK		[-]	PF0294	107,8×39,4×13,1	
2.0 MZR	02/08→	108	147	AK		[+]	PF0699	136,9×58,8×16,4		AK		[-]	PF0294	107,8×39,4×13,1	
2.0 MZR-CD	02/08→	103	140	AK		[+]	PF0699	136,9×58,8×16,4							
2.2 D	01/10→	95	129	AK		[+]	PF0699	136,9×58,8×16,4		AK		[-]	PF0294	107,8×39,4×13,1	
2.2 MRZ-CD	01/10→	132	180	AK		[+]	PF0699	136,9×58,8×16,4		AK		[-]	PF0294	107,8×39,4×13,1	
2.2 MZR-CD	01/09→	92	125	AK		[+]	PF0699	136,9×58,8×16,4		AK		[-]	PF0294	107,8×39,4×13,1	
2.2 MZR-CD	01/09→	120	163	AK		[+]	PF0699	136,9×58,8×16,4		AK		[-]	PF0294	107,8×39,4×13,1	
2.2 MZR-CD	01/09→	136	185	AK		[+]	PF0699	136,9×58,8×16,4		AK		[-]	PF0294	107,8×39,4×13,1	
2.5 MZR	02/08→	125	170	AK		[+]	PF0699	136,9×58,8×16,4		AK		[-]	PF0294	107,8×39,4×13,1	
6 II Hatchback (GH)															
1.8 MZR	08/07→	88	120	AK		[+]	PF0699	136,9×58,8×16,4		AK		[-]	PF0294	107,8×39,4×13,1	
2.0 MZR	01/10→	114	155	AK		[+]	PF0699	136,9×58,8×16,4		AK		[-]	PF0294	107,8×39,4×13,1	
2.0 MZR	08/07→	108	147	AK		[+]	PF0699	136,9×58,8×16,4		AK		[-]	PF0294	107,8×39,4×13,1	
2.0 MZR-CD	08/07→	103	140	AK		[+]	PF0699	136,9×58,8×16,4							
2.2 D	01/10→	95	129	AK		[+]	PF0699	136,9×58,8×16,4		AK		[-]	PF0294	107,8×39,4×13,1	
2.2 MZR-CD	01/10→	132	180	AK		[+]	PF0699	136,9×58,8×16,4		AK		[-]	PF0294	107,8×39,4×13,1	
2.2 MZR-CD	01/09→	136	185	AK		[+]	PF0699	136,9×58,8×16,4		AK		[-]	PF0294	107,8×39,4×13,1	
2.2 MZR-CD	01/09→	120	163	AK		[+]	PF0699	136,9×58,8×16,4		AK		[-]	PF0294	107,8×39,4×13,1	
2.2 MZR-CD	01/09→	92	125	AK		[+]	PF0699	136,9×58,8×16,4		AK		[-]	PF0294	107,8×39,4×13,1	
2.5 MZR	08/07→	125	170	AK		[+]	PF0699	136,9×58,8×16,4		AK		[-]	PF0294	107,8×39,4×13,1	
6 III (GJ)															
2.0	01/13→	107	146	AK		[+]	PF0677	140,3×59,6×15,5		AK		[+]	PF0678	101,5×44,4×14,3	
2.0	12/12→	114	155	AK		[+]	PF0677	140,3×59,6×15,5		AK		[+]	PF0678	101,5×44,4×14,3	
2.0	01/13→	121	165	AK		[+]	PF0677	140,3×59,6×15,5		AK		[+]	PF0678	101,5×44,4×14,3	
2.5	12/12→	138	188	AK		[+]	PF0677	140,3×59,6×15,5		AK		[+]	PF0678	101,5×44,4×14,3	
2.5	01/13→	141	192	AK		[+]	PF0677	140,3×59,6×15,5		AK		[+]	PF0678	101,5×44,4×14,3	
2.2 D	01/13→	110	150	AK		[+]	PF0677	140,3×59,6×15,5		AK		[+]	PF0678	101,5×44,4×14,3	
2.2 D	12/12→	129	175	AK		[+]	PF0677	140,3×59,6×15,5		AK		[+]	PF0678	101,5×44,4×14,3	
6 SW III (GJ)															
2.0	01/13→	107	146	AK		[+]	PF0677	140,3×59,6×15,5		AK		[+]	PF0678	101,5×44,4×14,3	
2.0	12/12→	114	155	AK		[+]	PF0677	140,3×59,6×15,5		AK		[+]	PF0678	101,5×44,4×14,3	
2.0	01/13→	121	165	AK		[+]	PF0677	140,3×59,6×15,5		AK		[+]	PF0678	101,5×44,4×14,3	
2.5	12/12→	138	188	AK		[+]	PF0677	140,3×59,6×15,5		AK		[+]	PF0678	101,5×44,4×14,3	

		KW	CV												
				SiS	i	W.i.	MAGNETI MARELLI	W×H×Th (mm)	Extra kit [Opt]	SiS	i	W.i.	MAGNETI MARELLI	W×H×Th (mm)	Extra kit [Opt]
MAZDA															
6 SW III (GJ)															
2.5	12/12 →	141	192	AK		[+]	**PF0677**	140,3×59,6×15,5		AK		[+]	**PF0678**	101,5×44,4×14,3	
2.2 D	12/12 →	110	150	AK		[+]	**PF0677**	140,3×59,6×15,5		AK		[+]	**PF0678**	101,5×44,4×14,3	
2.2 D	12/12 →	129	175	AK		[+]	**PF0677**	140,3×59,6×15,5		AK		[+]	**PF0678**	101,5×44,4×14,3	
626 Berlina IV (GE)															
1.8 i	01/92 → 04/97	77	105	ST		[+]	**PF0296**	131,5×51,5×16							
1.8 i	08/94 → 04/97	66	90	ST		[+]	**PF0296**	131,5×51,5×16							
1.8 i	05/94 → 06/97	78	106	ST		[+]	**PF0296**	131,5×51,5×16							
2.0 D	05/94 → 06/97	56	76	ST		[+]	**PF0296**	131,5×51,5×16							
2.0 D GLX Comprex	10/92 → 04/97	55	75	ST		[+]	**PF0296**	131,5×51,5×16							
2.0 i	01/92 → 04/97	85	115	ST		[+]	**PF0296**	131,5×51,5×16							
2.0 i 4WD	04/92 → 04/97	85	116	ST		[+]	**PF0296**	131,5×51,5×16							
2.5 24V	01/92 → 04/97	121	165	ST		[+]	**PF0296**	131,5×51,5×16							
626 Hatchback IV (GE)															
1.8	08/91 → 04/97	77	105	ST		[+]	**PF0296**	131,5×51,5×16							
1.8	08/94 → 04/97	66	90	ST		[+]	**PF0296**	131,5×51,5×16							
2.0 D GLX Comprex	01/93 → 04/97	55	75	ST		[+]	**PF0296**	131,5×51,5×16							
2.0 i	08/91 → 04/97	85	115	ST		[+]	**PF0296**	131,5×51,5×16							
2.0 i 4WD	04/92 → 04/97	85	116	ST		[+]	**PF0296**	131,5×51,5×16							
2.5 24V	01/92 → 04/97	121	165	ST		[+]	**PF0296**	131,5×51,5×16							
2.5 24V	08/94 → 04/97	120	163	ST		[+]	**PF0296**	131,5×51,5×16							
626 V Berlina (GF)															
2.0	05/97 → 02			ST		[+]	**PF0466**	131,8×56,2×16,1							
2.0 HP	02/98 → 02			ST		[+]	**PF0466**	131,8×56,2×16,1							
2.0 DiTD	04/98 → 02			ST		[+]	**PF0466**	131,8×56,2×16,1							
2.0 TDI	04/98 → 02			ST		[+]	**PF0466**	131,8×56,2×16,1							
626 V Hatchback (GF)															
2.0	05/97 → 02			ST		[+]	**PF0466**	131,8×56,2×16,1							
2.0 HP	02/98 → 02			ST		[+]	**PF0466**	131,8×56,2×16,1							
2.0 DiTD	04/98 → 02			ST		[+]	**PF0466**	131,8×56,2×16,1							
2.0 TDI	04/98 → 02			ST		[+]	**PF0466**	131,8×56,2×16,1							
626 V SW (GW)															
1.9	01/00 →			ST		[+]	**PF0466**	131,8×56,2×16,1							
2.0	02/98 →			ST		[+]	**PF0466**	131,8×56,2×16,1							
2.0 HP	02/98 →			ST		[+]	**PF0466**	131,8×56,2×16,1							
2.0 DiTD	09/98 →			ST		[+]	**PF0466**	131,8×56,2×16,1							
2.0 TDI	04/98 →			ST		[+]	**PF0466**	131,8×56,2×16,1							
2.0 TD	10/00 →			ST		[+]	**PF0466**	131,8×56,2×16,1							
Anfini MS															
MS-6 1.8i V6 24V	92 →			ST		[+]	**PF0296**	131,5×51,5×16							
MS-6 2.0i V6 24V	92 →			ST		[+]	**PF0296**	131,5×51,5×16							

		KW	CV	SiS	i	W.i.	MAGNETI MARELLI	W×H×Th (mm)	Extra kit [Opt]	SiS	i	W.i.	MAGNETI MARELLI	W×H×Th (mm)	Extra kit [Opt]
MAZDA															
Anfini MS															
MS-8 1.8i V6 24V	92→			ST		[+]	**PF0296**	131,5×51,5×16							
MS-8 2.0i V6 24V	92→			ST		[+]	**PF0296**	131,5×51,5×16							
Astina															
1.5i 16V	91→			ST		[+]	**PF0286**	91,6×64×15							
1.8i 16V	91→			ST		[+]	**PF0286**	91,6×64×15							
BT-50 (CD)															
2.5 MRZ-CD 4x4	12/06→	105	143	ST		[+]	**PF0439**	145,1×58,4×14	OK093						
3.0 CDVi	12/06→	115	156	ST		[+]	**PF0439**	145,1×58,4×14	OK093						
3.0 CDVi 4x4	12/06→	115	156	ST		[+]	**PF0439**	145,1×58,4×14	OK093						
BT-50 Pianale (CD)															
2.5 CDVi	12/06→	105	143	ST		[+]	**PF0439**	145,1×58,4×14	OK093						
3.0 CDVi	12/06→	115	156	ST		[+]	**PF0439**	145,1×58,4×14	OK093						
3.0 CDVi 4x4	12/06→	115	156	ST		[+]	**PF0439**	145,1×58,4×14	OK093						
Clef															
2.0i V6 24V	92→			ST		[+]	**PF0296**	131,5×51,5×16							
2.5i V6 24V	92→			ST		[+]	**PF0296**	131,5×51,5×16							
Cronos															
1.8i V6 24V	92→			ST		[+]	**PF0296**	131,5×51,5×16							
2.0 D Comprex	92→			ST		[+]	**PF0296**	131,5×51,5×16							
2.0i 16V	92→			ST		[+]	**PF0296**	131,5×51,5×16							
2.0i V6	92→			ST		[+]	**PF0296**	131,5×51,5×16							
CX-5 (KE)															
2.0 4x4	07/12→	113	154	AK	Ø Disc 297	[+]	**PF0710**	141,9×61,2×15,8		AK	Ø Disc 303	[+]	**PF0711**	104,6×43,1×14,4	
2.0	07/12→	114	155	AK	Ø Disc 297	[+]	**PF0710**	141,9×61,2×15,8		AK	Ø Disc 303	[+]	**PF0711**	104,6×43,1×14,4	
2.0 4x4	07/12→	114	155	AK	Ø Disc 297	[+]	**PF0710**	141,9×61,2×15,8		AK	Ø Disc 303	[+]	**PF0711**	104,6×43,1×14,4	
2.0	11/11→	118	160	AK	Ø Disc 297	[+]	**PF0710**	141,9×61,2×15,8		AK	Ø Disc 303	[+]	**PF0711**	104,6×43,1×14,4	
2.0	11/11→	121	165	AK	Ø Disc 297	[+]	**PF0710**	141,9×61,2×15,8		AK	Ø Disc 303	[+]	**PF0711**	104,6×43,1×14,4	
2.2 D	04/12→	110	150	AK	Ø Disc 297	[+]	**PF0710**	141,9×61,2×15,8		AK	Ø Disc 303	[+]	**PF0711**	104,6×43,1×14,4	
2.2 D 4x4	04/12→	110	150	AK	Ø Disc 297	[+]	**PF0710**	141,9×61,2×15,8		AK	Ø Disc 303	[+]	**PF0711**	104,6×43,1×14,4	
2.2 D	04/12→	129	175	AK	Ø Disc 297	[+]	**PF0710**	141,9×61,2×15,8		AK	Ø Disc 303	[+]	**PF0711**	104,6×43,1×14,4	
Demio (DW)															
1.3 16V	08/98→	46	63	ST		[+]	**PF0286**	91,6×64×15							
1.3 i 16V	08/98→04/00	53	72	ST		[+]	**PF0286**	91,6×64×15							
1.5 16V	04/00→	55	75	ST		[+]	**PF0286**	91,6×64×15							
1.5 i 16V	10/96→12/02	64	87	ST		[+]	**PF0286**	91,6×64×15							
Demio II (DW)															
1.3	02/03→	67	91	ATE	+ABS	[-]	**PF0252**	150,3×58×18,6							
1.5	02/03→	82	111	ATE	+ABS	[-]	**PF0252**	150,3×58×18,6							

		KW	CV	SiS	i	W.i.	MAGNETI MARELLI	W×H×Th (mm)	Extra kit [Opt]	SiS	i	W.i.	MAGNETI MARELLI	W×H×Th (mm)	Extra kit [Opt]
MAZDA															
E 2000 / 2200															
2.2 D	02/97 →			ST		[+]	**PF0342**	139,2×58,9×16,6							
2.2 D 4WD	02/97 →			ST		[+]	**PF0342**	139,2×58,9×16,6							
2.2 D	02/97 →			ST		[+]	**PF0342**	139,2×58,9×16,6							
2.2 D 4WD	02/97 →			ST		[+]	**PF0342**	139,2×58,9×16,6							
Eunos															
500 2.0i V6 24V	94 →			ST		[+]	**PF0296**	131,5×51,5×16							
MX-6 (GE)															
1.8	12/95 → 02/97	74	101	ST		[+]	**PF0296**	131,5×51,5×16							
2.0	02/92 →	85	115	ST		[+]	**PF0296**	131,5×51,5×16							
2.2	12/95 → 02/97	162	220	ST		[+]	**PF0296**	131,5×51,5×16							
2.5 24V	02/92 →	121	165	ST		[+]	**PF0296**	131,5×51,5×16							
2.5 i 24V	08/94 →	120	163	ST		[+]	**PF0296**	131,5×51,5×16							
Premacy (CP)															
1.8	99 →			ST		[+]	**PF0466**	131,8×56,2×16,1							
2.0	11/01 →			ST		[+]	**PF0466**	131,8×56,2×16,1							
2.0 TD	00 →			ST		[+]	**PF0466**	131,8×56,2×16,1							
Revue															
1.3i 16V	91 →			ST		[+]	**PF0286**	91,6×64×15							
1.5i 16V	91 →			ST		[+]	**PF0286**	91,6×64×15							
Xedos 6 (CA)															
1.6i 16V	92 →			ST		[+]	**PF0296**	131,5×51,5×16							
2.0i V6 24V	92 →			ST		[+]	**PF0296**	131,5×51,5×16							
MERCEDES-BENZ															
190 (W201)															
1.8	90 → 94			LG		[-]	**PF0305**	95×53×18	OK032	ATE		[-]	**PF0306**	61,7×54,2×15,5	
2.0	82 → 87									ATE		[-]	**PF0306**	61,7×54,2×15,5	
2.0	87 → 94			LG		[-]	**PF0305**	95×53×18	OK032	ATE		[-]	**PF0306**	61,7×54,2×15,5	
2.0D	82 → 87									ATE		[-]	**PF0306**	61,7×54,2×15,5	
2.0D	87 → 94			LG		[-]	**PF0305**	95×53×18	OK032	ATE		[-]	**PF0306**	61,7×54,2×15,5	
2.3	86 → 94			LG		[+]	**PF0305**	95×53×18	OK032	ATE		[-]	**PF0306**	61,7×54,2×15,5	
2.3i 16V	85 → 94									ATE		[-]	**PF0306**	61,7×54,2×15,5	
2.5D	85 → 94			LG		[-]	**PF0305**	95×53×18	OK032	ATE		[-]	**PF0306**	61,7×54,2×15,5	
2.5 TD	85 → 94			LG		[-]	**PF0305**	95×53×18	OK032	ATE		[-]	**PF0306**	61,7×54,2×15,5	
2.5i 16V	89 → 94									ATE		[o]	**PF0307**	61,7×58,5×15,2	
2.5i Evoluzione	05/90 → 08/93									ATE		[o]	**PF0307**	61,7×58,5×15,2	
2.6	86 → 94			LG		[-]	**PF0305**	95×53×18	OK032	ATE		[-]	**PF0306**	61,7×54,2×15,5	
A-CLASS (W168)															
140	07/97 → 08/04	60	82	LG	Passo corto 2423	[-]	**PF0301**	116,8×57,2×17	OK037/ OK076	LG		[-]	**PF0308**	96,5×41,5×14,3	OK037/ OK062
140	07/97 → 08/04	60	82	LG	Passo lungo 2593	[-]	**PF0301**	116,8×57,2×17	OK037/ OK073	LG		[-]	**PF0308**	96,5×41,5×14,3	OK037/ OK062

		KW	CV													
				SiS	i	W.i.	MAGNETI MARELLI	W×H×Th (mm)	Extra kit [Opt]	SiS	i	W.i.	MAGNETI MARELLI	W×H×Th (mm)	Extra kit [Opt]
MERCEDES-BENZ															
A-CLASS (W168)															
160	07/97 → 08/04	75	102	LG	Passo corto 2423	[-]	**PF0301**	116,8×57,2×17	OK037/ OK076	LG		[-]	**PF0308**	96,5×41,5×14,3	OK037/ OK062
160	07/97 → 08/04	75	102	LG	Passo lungo 2593	[-]	**PF0301**	116,8×57,2×17	OK037/ OK073	LG		[-]	**PF0308**	96,5×41,5×14,3	OK037/ OK062
160 CDI	02/01 → 08/04	55	75	LG	Passo corto 2423	[-]	**PF0301**	116,8×57,2×17	OK037/ OK076	LG		[-]	**PF0308**	96,5×41,5×14,3	OK037/ OK062
160 CDI	02/01 → 08/04	55	75	LG	Passo lungo 2593	[-]	**PF0301**	116,8×57,2×17	OK037/ OK073	LG		[-]	**PF0308**	96,5×41,5×14,3	OK037/ OK062
160 CDI	07/98 → 02/01	44	60	LG	Passo corto 2423	[-]	**PF0301**	116,8×57,2×17	OK037/ OK076	LG		[-]	**PF0308**	96,5×41,5×14,3	OK037/ OK062
160 CDI	07/98 → 02/01	44	60	LG	Passo lungo 2593	[-]	**PF0301**	116,8×57,2×17	OK037/ OK073	LG		[-]	**PF0308**	96,5×41,5×14,3	OK037/ OK062
170 CDI	07/98 → 02/01	66	90	LG	Passo corto 2423	[-]	**PF0301**	116,8×57,2×17	OK037/ OK076	LG		[-]	**PF0308**	96,5×41,5×14,3	OK037/ OK062
170 CDI	07/98 → 02/01	66	90	LG	Passo lungo 2593	[-]	**PF0301**	116,8×57,2×17	OK037/ OK073	LG		[-]	**PF0308**	96,5×41,5×14,3	OK037/ OK062
170 CDI	02/01 → 08/04	70	95	LG	Passo corto 2423	[-]	**PF0301**	116,8×57,2×17	OK037/ OK076	LG		[-]	**PF0308**	96,5×41,5×14,3	OK037/ OK062
170 CDI	02/01 → 08/04	70	95	LG	Passo lungo 2593	[-]	**PF0301**	116,8×57,2×17	OK037/ OK073	LG		[-]	**PF0308**	96,5×41,5×14,3	OK037/ OK062
190	03/99 → 08/04	92	125	LG	Passo corto 2423	[-]	**PF0301**	116,8×57,2×17	OK037/ OK076	LG		[-]	**PF0308**	96,5×41,5×14,3	OK037/ OK062
190	03/99 → 08/04	92	125	LG	Passo lungo 2593	[-]	**PF0301**	116,8×57,2×17	OK037/ OK073	LG		[-]	**PF0308**	96,5×41,5×14,3	OK037/ OK062
190 Twin Engine	04/99 → 02/01	184	250	LG	Passo corto 2423	[-]	**PF0301**	116,8×57,2×17	OK037/ OK076	LG		[-]	**PF0308**	96,5×41,5×14,3	OK037/ OK062
190 Twin Engine	04/99 → 02/01	184	250	LG	Passo lungo 2593	[-]	**PF0301**	116,8×57,2×17	OK037/ OK073	LG		[-]	**PF0308**	96,5×41,5×14,3	OK037/ OK062
210	03/02 → 08/04	103	140	LG	Passo corto 2423	[-]	**PF0301**	116,8×57,2×17	OK037/ OK076	LG		[-]	**PF0308**	96,5×41,5×14,3	OK037/ OK062
210	03/02 → 08/04	103	140	LG	Passo lungo 2593	[-]	**PF0301**	116,8×57,2×17	OK037/ OK073	LG		[-]	**PF0308**	96,5×41,5×14,3	OK037/ OK062
A-CLASS (W169)															
150	09/04 → 13	70	95	LG	(169.031, 169.331)	[o]	**PF0302**	116,6×63,9×19	OK032/ OK027/ OK043	LG		[-]	**PF0308**	96,5×41,5×14,3	OK037/ OK062
160 CDI	09/04 → 13	60	82	LG	(169.006, 169.306)	[o]	**PF0302**	116,6×63,9×19	OK032/ OK027/ OK043	LG		[-]	**PF0308**	96,5×41,5×14,3	OK037/ OK062
170	09/04 → 13	85	116	LG	(169.032, 169.332)	[o]	**PF0302**	116,6×63,9×19	OK032/ OK027/ OK070	LG		[-]	**PF0308**	96,5×41,5×14,3	OK037/ OK062

		KW	CV													
				SiS	i	W.i.	MAGNETI MARELLI	W×H×Th (mm)	Extra kit [Opt]	SiS	i	W.i.	MAGNETI MARELLI	W×H×Th (mm)	Extra kit [Opt]
MERCEDES-BENZ																
A-CLASS (W169)																
180	04/09 → 13	85	116	LG	(169.032, 169.332)	[o]	**PF0302**	116,6×63,9×19	OK032/ OK027/ OK070	LG		[-]	**PF0308**	96,5×41,5×14,3	OK037/ OK062
180 CDI	09/04 → 13	80	109	LG	(169.007, 169.307)	[o]	**PF0302**	116,6×63,9×19	OK032/ OK027/ OK070	LG		[-]	**PF0308**	96,5×41,5×14,3	OK037/ OK062
200	09/04 → 13	100	136	LG	(169.033, 169.333)	[o]	**PF0309**	131,7×69,9×20	OK032/ OK027/ OK044	LG		[-]	**PF0308**	96,5×41,5×14,3	OK037/ OK062
200 CDI	09/04 → 13	103	140	LG	(169.008, 169.308)	[o]	**PF0309**	131,7×69,9×20	OK032/ OK027/ OK044	LG		[-]	**PF0308**	96,5×41,5×14,3	OK037/ OK062
200 TURBO	09/05 → 13	142	193	LG	(169.034, 169.334)	[o]	**PF0309**	131,7×69,9×20	OK032/ OK027/ OK044	LG		[-]	**PF0308**	96,5×41,5×14,3	OK037/ OK062
A Coupé (W169)																
1.5	05 → 13			LG		[o]	**PF0302**	116,6×63,9×19	OK032/ OK027/ OK043	LG		[-]	**PF0308**	96,5×41,5×14,3	OK037/ OK062
1.6 Cdi	05 → 13			LG		[o]	**PF0302**	116,6×63,9×19	OK032/ OK027/ OK043	LG		[-]	**PF0308**	96,5×41,5×14,3	OK037/ OK062
1.7	05 → 13			LG		[o]	**PF0302**	116,6×63,9×19	OK032/ OK027/ OK070	LG		[-]	**PF0308**	96,5×41,5×14,3	OK037/ OK062
1.8 Cdi	05 → 13			LG		[o]	**PF0302**	116,6×63,9×19	OK032/ OK027/ OK070	LG		[-]	**PF0308**	96,5×41,5×14,3	OK037/ OK062
2.0	05 → 13			LG		[o]	**PF0309**	131,7×69,9×20	OK032/ OK027/ OK044	LG		[-]	**PF0308**	96,5×41,5×14,3	OK037/ OK062
2.0 Cdi	05 → 13			LG		[o]	**PF0309**	131,7×69,9×20	OK032/ OK027/ OK044	LG		[-]	**PF0308**	96,5×41,5×14,3	OK037/ OK062
A-CLASS (W176)																
180	06/12 →	90	122	LG	+Sport pack	[o]	**PF0734**	144,1×71,7×19,3	OK030	LG		[o]	**PF0736**	106,4×59,1×18,4	OK039
180	06/12 →	90	122	LG	- kit sport	[o]	**PF0735**	129,1×71,5×19,3	OK030	LG		[o]	**PF0736**	106,4×59,1×18,4	OK039
180 CDI	06/12 →	80	109	LG	+Sport pack	[o]	**PF0734**	144,1×71,7×19,3	OK030	LG		[o]	**PF0736**	106,4×59,1×18,4	OK039
180 CDI	06/12 →	80	109	LG	- kit sport	[o]	**PF0735**	129,1×71,5×19,3	OK030	LG		[o]	**PF0736**	106,4×59,1×18,4	OK039
180 CDI	06/12 →	80	109	LG	+Sport pack	[o]	**PF0734**	144,1×71,7×19,3	OK030	LG		[o]	**PF0736**	106,4×59,1×18,4	OK039
180 CDI	06/12 →	80	109	LG	- kit sport	[o]	**PF0735**	129,1×71,5×19,3	OK030	LG		[o]	**PF0736**	106,4×59,1×18,4	OK039
200	06/12 →	115	156	LG	+Sport pack	[o]	**PF0734**	144,1×71,7×19,3	OK030	LG		[o]	**PF0736**	106,4×59,1×18,4	OK039
200	06/12 →	115	156	LG	- kit sport	[o]	**PF0735**	129,1×71,5×19,3	OK030	LG		[o]	**PF0736**	106,4×59,1×18,4	OK039
250	06/12 →	155	211	LG	+Sport pack	[o]	**PF0734**	144,1×71,7×19,3	OK030	LG		[o]	**PF0736**	106,4×59,1×18,4	OK039

		KW	CV	SiS	i	W.i.	MAGNETI MARELLI	W×H×Th (mm)	Extra kit [Opt]	SiS	i	W.i.	MAGNETI MARELLI	W×H×Th (mm)	Extra kit [Opt]
MERCEDES-BENZ															
A-CLASS (W176)															
250	06/12→	155	211	LG	- kit sport	[o]	**PF0735**	129,1×71,5×19,3	OK030	LG		[o]	**PF0736**	106,4×59,1×18,4	OK039
200 CDI	06/12→	100	136	LG	+Sport pack	[o]	**PF0734**	144,1×71,7×19,3	OK030	LG		[o]	**PF0736**	106,4×59,1×18,4	OK039
200 CDI	06/12→	100	136	LG	- kit sport	[o]	**PF0735**	129,1×71,5×19,3	OK030	LG		[o]	**PF0736**	106,4×59,1×18,4	OK039
B-CLASS (W245)															
150	03/05→	70	95	LG	(245.231)	[o]	**PF0302**	116,6×63,9×19	OK032/ OK027/ OK070	LG		[-]	**PF0308**	96,5×41,5×14,3	OK037/ OK062
170	03/05→	85	116	LG	(245.232)	[o]	**PF0302**	116,6×63,9×19	OK032/ OK027/ OK070	LG		[-]	**PF0308**	96,5×41,5×14,3	OK037/ OK062
170 NGT	04/08→	85	116	LG	(245.233)	[o]	**PF0302**	116,6×63,9×19	OK032/ OK027/ OK070	LG		[-]	**PF0308**	96,5×41,5×14,3	OK037/ OK062
180	04/09→	85	116	LG	(245.232)	[o]	**PF0302**	116,6×63,9×19	OK032/ OK027/ OK044	LG		[-]	**PF0308**	96,5×41,5×14,3	OK037/ OK062
180 CDI	03/05→	80	109	LG	(245.207)	[o]	**PF0302**	116,6×63,9×19	OK032/ OK027/ OK044	LG		[-]	**PF0308**	96,5×41,5×14,3	OK037/ OK062
180 NGT	04/08→	85	116	LG	(245.233)	[o]	**PF0302**	116,6×63,9×19	OK032/ OK027/ OK044	LG		[-]	**PF0308**	96,5×41,5×14,3	OK037/ OK062
200	03/05→	100	136	LG	(245.233)	[o]	**PF0309**	131,7×69,9×20	OK032/ OK027/ OK044	LG		[-]	**PF0308**	96,5×41,5×14,3	OK037/ OK062
200 CDI	03/05→11	100	136	LG		[o]	**PF0309**	131,7×69,9×20	OK032/ OK027/ OK044	LG		[-]	**PF0308**	96,5×41,5×14,3	OK037/ OK062
200 CDI	03/05→	103	140	LG	(245.208)	[o]	**PF0309**	131,7×69,9×20	OK032/ OK027/ OK044	LG		[-]	**PF0308**	96,5×41,5×14,3	OK037/ OK062
200 TURBO	03/05→	142	193	LG	(245.234)	[o]	**PF0309**	131,7×69,9×20	OK032/ OK027/ OK044	LG		[-]	**PF0308**	96,5×41,5×14,3	OK037/ OK062
B-CLASS (W246)															
180	11/11→	90	122	LG	(246.242) +Sport pack	[o]	**PF0734**	144,1×71,7×19,3	OK030	LG		[o]	**PF0736**	106,4×59,1×18,4	OK039
200	11/11→	115	156	LG	(246.243 +Sport pack	[o]	**PF0734**	144,1×71,7×19,3	OK030	LG		[o]	**PF0736**	106,4×59,1×18,4	OK039
200	11/11→	115	156	LG	(246.243) -Sport pack	[o]	**PF0735**	129,1×71,5×19,3	OK030	LG		[o]	**PF0736**	106,4×59,1×18,4	OK039
180 CDI	11/11→	80	109	LG	(246.200) +Sport pack	[o]	**PF0734**	144,1×71,7×19,3	OK030	LG		[o]	**PF0736**	106,4×59,1×18,4	OK039

		KW	CV	SiS	i	W.i.	MAGNETI MARELLI	W×H×Th (mm)	Extra kit [Opt]	SiS	i	W.i.	MAGNETI MARELLI	W×H×Th (mm)	Extra kit [Opt]
MERCEDES-BENZ															
B-CLASS (W246)															
180 CDI	11/11→	80	109	LG	(246.200) - Sport pack	[o]	**PF0735**	129,1×71,5×19,3	OK030	LG		[o]	**PF0736**	106,4×59,1×18,4	OK039
200 CDI	11/11→	100	136	LG	(246.201) +Sport pack	[o]	**PF0734**	144,1×71,7×19,3	OK030	LG		[o]	**PF0736**	106,4×59,1×18,4	OK039
200 CDI	11/11→	100	136	LG	(246.201) - Sport pack	[o]	**PF0735**	129,1×71,5×19,3	OK030	LG		[o]	**PF0736**	106,4×59,1×18,4	OK039
250	05/12→	155	211	LG	(246.244) +Sport pack	[o]	**PF0734**	144,1×71,7×19,3	OK030	LG		[o]	**PF0736**	106,4×59,1×18,4	OK039
250	05/12→	155	211	LG	(246.244) - Sport pack	[o]	**PF0735**	129,1×71,5×19,3	OK030	LG		[o]	**PF0736**	106,4×59,1×18,4	OK039
C (W202)															
180	93→05/00									ATE		[-]	**PF0306**	61,7×54,2×15,5	
180	96→05/00									ATE		[-]	**PF0297**	63,7×63,4×15,5	
180 T SW	93→05/00									ATE		[-]	**PF0306**	61,7×54,2×15,5	
180 T SW	96→05/00									ATE	15"	[-]	**PF0311**	63,8×73×14,2	
200	93→05/00									ATE		[-]	**PF0306**	61,7×54,2×15,5	
200	96→05/00									ATE		[-]	**PF0297**	63,7×63,4×15,5	
200 CDI	98→05/00									ATE		[-]	**PF0306**	61,7×54,2×15,5	
200 CDI	98→05/00									ATE	15"	[-]	**PF0311**	63,8×73×14,2	
200 CDI T SW	98→05/00									ATE		[-]	**PF0306**	61,7×54,2×15,5	
200 CDI T SW	98→05/00									ATE	15"	[-]	**PF0311**	63,8×73×14,2	
200 D	98→05/00									ATE		[-]	**PF0306**	61,7×54,2×15,5	
200 DT SW	98→05/00									ATE		[-]	**PF0306**	61,7×54,2×15,5	
200 DT SW	96→05/00									ATE	15"	[-]	**PF0311**	63,8×73×14,2	
200 T	93→05/00									ATE		[-]	**PF0306**	61,7×54,2×15,5	
200 T SW	96→05/00									ATE	15"	[-]	**PF0311**	63,8×73×14,2	
220	93→05/00									ATE		[-]	**PF0306**	61,7×54,2×15,5	
220	96→05/00									ATE		[-]	**PF0297**	63,7×63,4×15,5	
220 CDI	98→05/00									ATE		[-]	**PF0306**	61,7×54,2×15,5	
220 CDI	98→05/00									ATE	15"	[-]	**PF0311**	63,8×73×14,2	
220 CDI ASR	98→05/00									ATE		[-]	**PF0306**	61,7×54,2×15,5	
220 CDI T SW	98→05/00									ATE		[-]	**PF0306**	61,7×54,2×15,5	
220 CDI T SW	98→05/00									ATE	15"	[-]	**PF0311**	63,8×73×14,2	
220 CDI T SW ASR	98→05/00									ATE		[-]	**PF0306**	61,7×54,2×15,5	
220 D	93→96									ATE		[0]	**PF0307**	61,7×58,5×15,2	
220 D	93→05/00									ATE		[-]	**PF0306**	61,7×54,2×15,5	
220 D T SW	93→96									ATE		[0]	**PF0307**	61,7×58,5×15,2	
220 D T SW	96→05/00									ATE		[-]	**PF0306**	61,7×54,2×15,5	
220 D T SW	96→05/00									ATE	15"	[-]	**PF0311**	63,8×73×14,2	
220 T SW	93→05/00									ATE		[-]	**PF0306**	61,7×54,2×15,5	
220 T SW	96→05/00									ATE	15"	[-]	**PF0311**	63,8×73×14,2	
230	96→05/00									ATE		[-]	**PF0306**	61,7×54,2×15,5	
230	96→05/00									ATE		[-]	**PF0297**	63,7×63,4×15,5	

		KW	CV													
				SiS	i	W.i.	MAGNETI MARELLI	W×H×Th (mm)	Extra kit [Opt]	SiS	i	W.i.	MAGNETI MARELLI	W×H×Th (mm)	Extra kit [Opt]
MERCEDES-BENZ															
C (W202)															
230 T SW	96 → 05/00									ATE		[-]	**PF0306**	61,7×54,2×15,5	
230 T SW	96 → 05/00									ATE	15"	[-]	**PF0311**	63,8×73×14,2	
240	95 → 05/00			ATE		[o]	**PF0310**	150,1×59,4×19,5	OK020	ATE		[-]	**PF0306**	61,7×54,2×15,5	
240	95 → 05/00									ATE	15"	[-]	**PF0311**	63,8×73×14,2	
240 ASR	95 → 05/00			ATE		[o]	**PF0310**	150,1×59,4×19,5	OK020	ATE		[-]	**PF0306**	61,7×54,2×15,5	
240 T SW	95 → 05/00			ATE		[o]	**PF0310**	150,1×59,4×19,5	OK020	ATE		[-]	**PF0306**	61,7×54,2×15,5	
240 T SW	95 → 05/00									ATE	15"	[-]	**PF0311**	63,8×73×14,2	
240 T SW ASR	95 → 05/00			ATE		[o]	**PF0310**	150,1×59,4×19,5	OK020	ATE		[-]	**PF0306**	61,7×54,2×15,5	
250 D	93 → 05/00									ATE		[-]	**PF0306**	61,7×54,2×15,5	
250 D	96 → 05/00									ATE		[-]	**PF0297**	63,7×63,4×15,5	
250 D T SW	93 → 96									ATE		[o]	**PF0307**	61,7×58,5×15,2	
250 D T SW	96 → 05/00									ATE		[-]	**PF0306**	61,7×54,2×15,5	
250 D T SW	96 → 05/00									ATE	15"	[-]	**PF0311**	63,8×73×14,2	
250 TD	95 → 05/00									ATE		[-]	**PF0306**	61,7×54,2×15,5	
250 TD	95 → 05/00									ATE		[-]	**PF0297**	63,7×63,4×15,5	
250 TD	95 → 05/00									ATE		[-]	**PF0306**	61,7×54,2×15,5	
250 TD T SW	95 → 05/00									ATE		[-]	**PF0306**	61,7×54,2×15,5	
250 TD T SW	95 → 05/00									ATE		[-]	**PF0297**	63,7×63,4×15,5	
280	93 → 05/00									ATE		[-]	**PF0306**	61,7×54,2×15,5	
280	97 → 05/00			ATE		[o]	**PF0310**	150,1×59,4×19,5	OK020	ATE		[-]	**PF0306**	61,7×54,2×15,5	
280	97 → 05/00			ATE		[o]	**PF0310**	150,1×59,4×19,5		ATE	15"	[-]	**PF0311**	63,8×73×14,2	
280 ASR	97 → 05/00			ATE		[o]	**PF0310**	150,1×59,4×19,5	OK020	ATE		[-]	**PF0306**	61,7×54,2×15,5	
280 T SW	97 → 05/00			ATE		[o]	**PF0310**	150,1×59,4×19,5	OK020	ATE		[-]	**PF0306**	61,7×54,2×15,5	
280 T SW	97 → 05/00			ATE		[o]	**PF0310**	150,1×59,4×19,5		ATE	15"	[-]	**PF0311**	63,8×73×14,2	
280 T SW ASR	97 → 05/00			ATE		[o]	**PF0310**	150,1×59,4×19,5	OK020	ATE		[-]	**PF0306**	61,7×54,2×15,5	
C Kompressor (W202)															
200	95 →			ATE		[o]	**PF0310**	150,1×59,4×19,5	OK020	ATE		[-]	**PF0306**	61,7×54,2×15,5	
200	95 →			ATE		[o]	**PF0310**	150,1×59,4×19,5	OK020	ATE	15"	[-]	**PF0311**	63,8×73×14,2	
200 SW	95 →			ATE		[o]	**PF0310**	150,1×59,4×19,5	OK020	ATE		[-]	**PF0306**	61,7×54,2×15,5	
200 T SW	95 →			ATE		[o]	**PF0310**	150,1×59,4×19,5	OK020	ATE	15"	[-]	**PF0311**	63,8×73×14,2	
200 SW ASR	95 →			ATE		[o]	**PF0310**	150,1×59,4×19,5	OK020	ATE		[-]	**PF0306**	61,7×54,2×15,5	
230	95 →			ATE		[o]	**PF0310**	150,1×59,4×19,5	OK020	ATE		[-]	**PF0306**	61,7×54,2×15,5	
230	95 →			ATE		[o]	**PF0310**	150,1×59,4×19,5	OK020	ATE	15"	[-]	**PF0311**	63,8×73×14,2	
230 ASR	95 →			ATE		[o]	**PF0310**	150,1×59,4×19,5	OK020	ATE		[-]	**PF0306**	61,7×54,2×15,5	
230 T S.W .	95 →			ATE		[o]	**PF0310**	150,1×59,4×19,5	OK020	ATE		[-]	**PF0306**	61,7×54,2×15,5	
230 T SW	95 →			ATE		[o]	**PF0310**	150,1×59,4×19,5	OK020	ATE	15"	[-]	**PF0311**	63,8×73×14,2	
230 T SW ASR	95 →			ATE		[o]	**PF0310**	150,1×59,4×19,5	OK020	ATE		[-]	**PF0306**	61,7×54,2×15,5	
C Sport Coupé (203)															
180	01/03 →			LG		[o]	**PF0312**	131,1×69,8×19,5	OK037/ OK017/ OK024	ATE		[-]	**PF0311**	63,8×73×14,2	
180	01/03 →			LG		[o]	**PF0312**	131,1×69,8×19,5	OK037	ATE		[o]	**PF0553**	63,7×78,2×15,8	

		KW	CV	SiS	i	W.i.	MAGNETI MARELLI	W×H×Th (mm)	Extra kit [Opt]	SiS	i	W.i.	MAGNETI MARELLI	W×H×Th (mm)	Extra kit [Opt]
MERCEDES-BENZ															
C Sport Coupé (203)															
180 Kompressor	01/03 →			LG		[o]	**PF0312**	131,1×69,8×19,5	OK037/ OK017/ OK024	ATE		[-]	**PF0311**	63,8×73×14,2	
180 Kompressor	01/03 →			LG		[o]	**PF0312**	131,1×69,8×19,5	OK037	ATE		[o]	**PF0553**	63,7×78,2×15,8	
200 Kompressor	01/03 →			LG		[o]	**PF0312**	131,1×69,8×19,5	OK037/ OK017/ OK024	ATE		[-]	**PF0311**	63,8×73×14,2	
200 Kompressor	01/03 →			LG		[o]	**PF0312**	131,1×69,8×19,5	OK037	ATE		[o]	**PF0553**	63,7×78,2×15,8	
200 CGi Kompressor	07/03 →			LG		[o]	**PF0312**	131,1×69,8×19,5	OK037/ OK017/ OK024	ATE		[-]	**PF0311**	63,8×73×14,2	
220	01/03 →			LG		[o]	**PF0312**	131,1×69,8×19,5	OK037/ OK017/ OK024	ATE		[-]	**PF0311**	63,8×73×14,2	
220	01/03 →			LG		[o]	**PF0312**	131,1×69,8×19,5	OK037	ATE		[o]	**PF0553**	63,7×78,2×15,8	
230 Kompressor	01/03 →			LG		[o]	**PF0312**	131,1×69,8×19,5	OK037/ OK017/ OK024	ATE		[-]	**PF0311**	63,8×73×14,2	
230 Kompressor	01/03 →			LG		[o]	**PF0312**	131,1×69,8×19,5	OK037	ATE		[o]	**PF0553**	63,7×78,2×15,8	
320	09/02 →			LG	(203)	[o]	**PF0312**	131,1×69,8×19,5	OK037/ OK017/ OK024	ATE		[o]	**PF0553**	63,7×78,2×15,8	
30 Cdi AMG	09/02 →			BR	(203)	[o]	**PF0585**	119,8×71,6×17,2							
C (W203)															
180	00 → 03/07			LG		[o]	**PF0312**	131,1×69,8×19,5	OK037/ OK017/ OK024	ATE		[-]	**PF0311**	63,8×73×14,2	
200	00 → 03/07			LG		[o]	**PF0312**	131,1×69,8×19,5	OK037/ OK017/ OK024	ATE		[-]	**PF0311**	63,8×73×14,2	
200 Cdi SW	02/01 →			LG		[o]	**PF0312**	131,1×69,8×19,5	OK037/ OK017/ OK024	ATE		[-]	**PF0311**	63,8×73×14,2	
220	00 → 03/07			LG		[o]	**PF0312**	131,1×69,8×19,5	OK037/ OK017/ OK024	ATE		[-]	**PF0311**	63,8×73×14,2	
220 Cdi Coupé	00 → 03/07			LG		[o]	**PF0312**	131,1×69,8×19,5	OK037/ OK017/ OK024	ATE		[-]	**PF0311**	63,8×73×14,2	

		KW	CV													
				SiS	i	W.i.	MAGNETI MARELLI	W×H×Th (mm)	Extra kit [Opt]	SiS	i	W.i.	MAGNETI MARELLI	W×H×Th (mm)	Extra kit [Opt]
MERCEDES-BENZ																
C (W203)																
230	01/05 → 03/07			LG		[o]	**PF0312**	131,1×69,8×19,5	OK037/ OK017/ OK024	ATE		[-]	**PF0311**	63,8×73×14,2	
240	00 → 03/07			LG		[o]	**PF0312**	131,1×69,8×19,5	OK037/ OK017/ OK024	ATE		[o]	**PF0553**	63,7×78,2×15,8	
240 SW	00 →			LG		[o]	**PF0312**	131,1×69,8×19,5	OK037/ OK017/ OK024	ATE		[o]	**PF0553**	63,7×78,2×15,8	
240 4-Matic	07/02 → 03/07			LG		[o]	**PF0312**	131,1×69,8×19,5	OK037/ OK017/ OK024	ATE		[o]	**PF0553**	63,7×78,2×15,8	
270	00 → 03/07			LG		[o]	**PF0312**	131,1×69,8×19,5	OK037/ OK017/ OK024	ATE		[o]	**PF0553**	63,7×78,2×15,8	
270 SW	00 →			LG		[o]	**PF0312**	131,1×69,8×19,5	OK037/ OK017/ OK024	ATE		[o]	**PF0553**	63,7×78,2×15,8	
280	01/05 → 03/07			LG		[o]	**PF0312**	131,1×69,8×19,5	OK037/ OK017/ OK024	ATE		[-]	**PF0311**	63,8×73×14,2	
280 4-Matic	01/05 → 03/07			LG		[o]	**PF0312**	131,1×69,8×19,5	OK037/ OK017/ OK024	ATE		[-]	**PF0311**	63,8×73×14,2	
320 4-Matic	07/02 → 03/07			LG		[o]	**PF0312**	131,1×69,8×19,5	OK037/ OK017/ OK024	ATE		[o]	**PF0553**	63,7×78,2×15,8	
320	00 → 03/07			LG		[o]	**PF0312**	131,1×69,8×19,5	OK037/ OK017/ OK024	ATE		[o]	**PF0553**	63,7×78,2×15,8	
320 SW	00 →			LG		[o]	**PF0312**	131,1×69,8×19,5	OK037/ OK017/ OK024	ATE		[o]	**PF0553**	63,7×78,2×15,8	
320 Cdi	01/05 → 03/07			LG		[o]	**PF0312**	131,1×69,8×19,5	OK037/ OK017/ OK024	ATE		[-]	**PF0311**	63,8×73×14,2	
350	01/05 → 03/07			LG		[o]	**PF0312**	131,1×69,8×19,5	OK037/ OK017/ OK024	ATE		[-]	**PF0311**	63,8×73×14,2	
350 4-Matic	01/05 → 03/07			LG		[o]	**PF0312**	131,1×69,8×19,5	OK037/ OK017/ OK024	ATE		[-]	**PF0311**	63,8×73×14,2	
30 Cdi AMG	01/03 → 03/07			BR		[o]	**PF0585**	119,8×71,6×17,2							
55 AMG	02/04 → 03/07			BR		[o]	**PF0320**	119,8×71,6×17,2							

		KW	CV	SiS	i	W.i.	MAGNETI MARELLI	W×H×Th (mm)	Extra kit [Opt]	SiS	i	W.i.	MAGNETI MARELLI	W×H×Th (mm)	Extra kit [Opt]
MERCEDES-BENZ															
C (W203)															
55 AMG	02/04 → 03/07			BR		[o]	**PF0585**	119,8×71,6×17,2		ATE		[-]	**PF0316**	141,3×57,4×16,5	
55 AMG T-Model	02/04 → 03/07			BR		[o]	**PF0585**	119,8×71,6×17,2		ATE		[-]	**PF0316**	141,3×57,4×16,5	
C Kompressor (W203)															
180 Coupé	01/01 → 03/07			LG		[o]	**PF0312**	131,1×69,8×19,5	OK037/ OK017/ OK024	ATE		[-]	**PF0311**	63,8×73×14,2	
180 SW	02/01 →			LG		[o]	**PF0312**	131,1×69,8×19,5	OK037/ OK017/ OK024	ATE		[-]	**PF0311**	63,8×73×14,2	
200 Coupé	01/01 → 03/07			LG		[o]	**PF0312**	131,1×69,8×19,5	OK037/ OK017/ OK024	ATE		[-]	**PF0311**	63,8×73×14,2	
200 SW	02/01 →			LG		[o]	**PF0312**	131,1×69,8×19,5	OK037/ OK017/ OK024	ATE		[-]	**PF0311**	63,8×73×14,2	
200 Cgi	07/03 → 03/07			LG		[o]	**PF0312**	131,1×69,8×19,5	OK037/ OK017/ OK024	ATE		[-]	**PF0311**	63,8×73×14,2	
230	01/01 → 03/07			LG		[o]	**PF0312**	131,1×69,8×19,5	OK037/ OK017/ OK024	ATE		[-]	**PF0311**	63,8×73×14,2	
32 AMG	03/01 → 03/07			LG		[o]	**PF0312**	131,1×69,8×19,5	OK037/ OK017/ OK024	ATE		[o]	**PF0553**	63,7×78,2×15,8	
C (W204)															
180 CDI	01/07 →	88	120	LG		[o]	**PF0313**	146,2×71,5×20,6	OK039/ OK044	ATE		[-]	**PF0314**	122,5×52,1×17,9	
180 CDI	01/07 →	88	120	LG	+Sport pack	[o]	**PF0313**	146,2×71,5×20,6	OK039/ OK059/ OK027	ATE		[-]	**PF0314**	122,5×52,1×17,9	
180 CGI	01/07 →	115	156	LG		[o]	**PF0313**	146,2×71,5×20,6	OK039/ OK044	ATE		[-]	**PF0314**	122,5×52,1×17,9	
180 CGI	01/07 →	115	156	LG	+Sport pack	[o]	**PF0313**	146,2×71,5×20,6	OK039/ OK059/ OK027	ATE		[-]	**PF0314**	122,5×52,1×17,9	
180 Kompressor	01/07 →	115	156	LG		[o]	**PF0313**	146,2×71,5×20,6	OK039/ OK044	ATE		[-]	**PF0314**	122,5×52,1×17,9	
180 Kompressor	01/07 →	115	156	LG	+Sport pack	[o]	**PF0313**	146,2×71,5×20,6	OK039/ OK059/ OK027	ATE		[-]	**PF0314**	122,5×52,1×17,9	
200 CDI	01/07 →	100	136	LG		[o]	**PF0313**	146,2×71,5×20,6	OK039/ OK044	ATE		[-]	**PF0314**	122,5×52,1×17,9	

MERCEDES-BENZ

C (W204)

		KW	CV	SiS	i	W.i.	MAGNETI MARELLI	W×H×Th (mm)	Extra kit [Opt]	SiS	i	W.i.	MAGNETI MARELLI	W×H×Th (mm)	Extra kit [Opt]
200 CDI	01/07→	100	136	LG	+Sport pack	[o]	**PF0313**	146,2×71,5×20,6	OK039/ OK059/ OK027	ATE		[-]	**PF0314**	122,5×52,1×17,9	
200 CGI	01/07→	135	184	LG		[o]	**PF0313**	146,2×71,5×20,6	OK039/ OK044	ATE		[-]	**PF0314**	122,5×52,1×17,9	
200 CGI	01/07→	135	184	LG	+Sport pack	[o]	**PF0313**	146,2×71,5×20,6	OK039/ OK059/ OK027	ATE		[-]	**PF0314**	122,5×52,1×17,9	
200 Kompressor	01/07→	135	184	LG		[o]	**PF0313**	146,2×71,5×20,6	OK039/ OK044	ATE		[-]	**PF0314**	122,5×52,1×17,9	
200 Kompressor	01/07→	135	184	LG	+Sport pack	[o]	**PF0313**	146,2×71,5×20,6	OK039/ OK059/ OK027	ATE		[-]	**PF0314**	122,5×52,1×17,9	
220 CDI	01/07→	125	170	LG		[o]	**PF0313**	146,2×71,5×20,6	OK039/ OK044	ATE		[-]	**PF0314**	122,5×52,1×17,9	
220 CDI	01/07→	125	170	LG	+Sport pack	[o]	**PF0313**	146,2×71,5×20,6	OK039/ OK059/ OK027	ATE		[-]	**PF0314**	122,5×52,1×17,9	
230	01/07→	150	204	LG		[o]	**PF0313**	146,2×71,5×20,6	OK039/ OK044	ATE		[-]	**PF0314**	122,5×52,1×17,9	
230	01/07→	150	204	LG	+Sport pack	[o]	**PF0313**	146,2×71,5×20,6	OK039/ OK059/ OK027	ATE		[-]	**PF0314**	122,5×52,1×17,9	
230 4-matic	01/07→	150	204	LG		[o]	**PF0313**	146,2×71,5×20,6	OK039/ OK044	ATE		[-]	**PF0314**	122,5×52,1×17,9	
230 4-matic	01/07→	150	204	LG	+Sport pack	[o]	**PF0313**	146,2×71,5×20,6	OK039/ OK059/ OK027	ATE		[-]	**PF0314**	122,5×52,1×17,9	
250 CDI	01/07→	150	204	LG		[o]	**PF0313**	146,2×71,5×20,6	OK039/ OK044	ATE		[-]	**PF0314**	122,5×52,1×17,9	
250 CDI	01/07→	150	204	LG	+Sport pack	[o]	**PF0313**	146,2×71,5×20,6	OK039/ OK059/ OK027	ATE		[-]	**PF0314**	122,5×52,1×17,9	
250 CDI 4-matic	01/07→	150	204	LG		[o]	**PF0313**	146,2×71,5×20,6	OK039/ OK044	ATE		[-]	**PF0314**	122,5×52,1×17,9	
250 CDI 4-matic	01/07→	150	204	LG	+Sport pack	[o]	**PF0313**	146,2×71,5×20,6	OK039/ OK059/ OK027	ATE		[-]	**PF0314**	122,5×52,1×17,9	
250 CGI	01/07→	150	204	LG		[o]	**PF0313**	146,2×71,5×20,6	OK039/ OK044	ATE		[-]	**PF0314**	122,5×52,1×17,9	
250 CGI	01/07→	150	204	LG	+Sport pack	[o]	**PF0313**	146,2×71,5×20,6	OK039/ OK059/ OK027	ATE		[-]	**PF0314**	122,5×52,1×17,9	

MERCEDES-BENZ

C (W204)

		KW	CV	SiS	i	W.i.	MAGNETI MARELLI	W×H×Th (mm)	Extra kit [Opt]	SiS	i	W.i.	MAGNETI MARELLI	W×H×Th (mm)	Extra kit [Opt]
280	01/07 →	170	231	LG		[o]	**PF0313**	146,2×71,5×20,6	OK039/ OK044	ATE		[-]	**PF0314**	122,5×52,1×17,9	
280	01/07 →	170	231	LG	+Sport pack	[o]	**PF0313**	146,2×71,5×20,6	OK039/ OK059/ OK027	ATE		[-]	**PF0314**	122,5×52,1×17,9	
280 4-matic	01/07 →	170	231	LG		[o]	**PF0313**	146,2×71,5×20,6	OK039/ OK044	ATE		[-]	**PF0314**	122,5×52,1×17,9	
280 4-matic	01/07 →	170	231	LG	+Sport pack	[o]	**PF0313**	146,2×71,5×20,6	OK039/ OK059/ OK027	ATE		[-]	**PF0314**	122,5×52,1×17,9	
300	01/07 →	170	231	LG		[o]	**PF0313**	146,2×71,5×20,6	OK039/ OK044	ATE		[-]	**PF0314**	122,5×52,1×17,9	
300	01/07 →	170	231	LG	+Sport pack	[o]	**PF0313**	146,2×71,5×20,6	OK039/ OK059/ OK027	ATE		[-]	**PF0314**	122,5×52,1×17,9	
300 4-matic	01/07 →	170	231	LG		[o]	**PF0313**	146,2×71,5×20,6	OK039/ OK044	ATE		[-]	**PF0314**	122,5×52,1×17,9	
300 4-matic	01/07 →	170	231	LG	+Sport pack	[o]	**PF0313**	146,2×71,5×20,6	OK039/ OK059/ OK027	ATE		[-]	**PF0314**	122,5×52,1×17,9	
300 CDI 4-matic	01/07 →	170	231	LG		[o]	**PF0313**	146,2×71,5×20,6	OK039/ OK044	ATE		[-]	**PF0314**	122,5×52,1×17,9	
300 CDI 4-matic	01/07 →	170	231	LG	+Sport pack	[o]	**PF0313**	146,2×71,5×20,6	OK039/ OK059/ OK027	ATE		[-]	**PF0314**	122,5×52,1×17,9	
320 CDI	01/07 →	165	224	LG		[o]	**PF0313**	146,2×71,5×20,6	OK039/ OK044	ATE		[-]	**PF0314**	122,5×52,1×17,9	
320 CDI	01/07 →	165	224	LG	+Sport pack	[o]	**PF0313**	146,2×71,5×20,6	OK039/ OK059/ OK027	ATE		[-]	**PF0314**	122,5×52,1×17,9	
320 CDI 4-matic	01/07 →	165	224	LG		[o]	**PF0313**	146,2×71,5×20,6	OK039/ OK044	ATE		[-]	**PF0314**	122,5×52,1×17,9	
320 CDI 4-matic	01/07 →	165	224	LG	+Sport pack	[o]	**PF0313**	146,2×71,5×20,6	OK039/ OK059/ OK027	ATE		[-]	**PF0314**	122,5×52,1×17,9	
350	01/07 →	225	306	LG		[o]	**PF0313**	146,2×71,5×20,6	OK039/ OK044	ATE		[-]	**PF0314**	122,5×52,1×17,9	
350	01/07 →	225	306	LG	+Sport pack	[o]	**PF0313**	146,2×71,5×20,6	OK039/ OK059/ OK027	ATE		[-]	**PF0314**	122,5×52,1×17,9	
350	01/07 →	200	272	LG		[o]	**PF0313**	146,2×71,5×20,6	OK039/ OK044	ATE		[-]	**PF0314**	122,5×52,1×17,9	

		KW	CV	SiS	i	W.i.	MAGNETI MARELLI	W×H×Th (mm)	Extra kit [Opt]	SiS	i	W.i.	MAGNETI MARELLI	W×H×Th (mm)	Extra kit [Opt]
MERCEDES-BENZ															
C (W204)															
350	01/07 →	200	272	LG	+Sport pack	[o]	**PF0313**	146,2×71,5×20,6	OK039/ OK059/ OK027	ATE		[-]	**PF0314**	122,5×52,1×17,9	
350 4-matic	01/07 →			LG		[o]	**PF0313**	146,2×71,5×20,6	OK039/ OK044	ATE		[-]	**PF0314**	122,5×52,1×17,9	
350 4-matic	01/07 →			LG	+Sport pack	[o]	**PF0313**	146,2×71,5×20,6	OK039/ OK059/ OK027	ATE		[-]	**PF0314**	122,5×52,1×17,9	
350 CDI	01/07 →	195	265	LG		[o]	**PF0313**	146,2×71,5×20,6	OK039/ OK044	ATE		[-]	**PF0314**	122,5×52,1×17,9	
350 CDI	01/07 →	195	265	LG	+Sport pack	[o]	**PF0313**	146,2×71,5×20,6	OK039/ OK059/ OK027	ATE		[-]	**PF0314**	122,5×52,1×17,9	
350 CDI	01/07 →	165	224	LG		[o]	**PF0313**	146,2×71,5×20,6	OK039/ OK044	ATE		[-]	**PF0314**	122,5×52,1×17,9	
350 CDI	01/07 →	165	224	LG	+Sport pack	[o]	**PF0313**	146,2×71,5×20,6	OK039/ OK059/ OK027	ATE		[-]	**PF0314**	122,5×52,1×17,9	
350 CDI	01/07 →	170	231	LG		[o]	**PF0313**	146,2×71,5×20,6	OK039/ OK044	ATE		[-]	**PF0314**	122,5×52,1×17,9	
350 CDI	01/07 →	170	231	LG	+Sport pack	[o]	**PF0313**	146,2×71,5×20,6	OK039/ OK059/ OK027	ATE		[-]	**PF0314**	122,5×52,1×17,9	
350 CDI 4-matic	01/07 →			LG		[o]	**PF0313**	146,2×71,5×20,6	OK039/ OK044	ATE		[-]	**PF0314**	122,5×52,1×17,9	
350 CDI 4-matic	01/07 →			LG	+Sport pack	[o]	**PF0313**	146,2×71,5×20,6	OK039/ OK059/ OK027	ATE		[-]	**PF0314**	122,5×52,1×17,9	
350 CGI	01/07 →	215	292	LG		[o]	**PF0313**	146,2×71,5×20,6	OK039/ OK044	ATE		[-]	**PF0314**	122,5×52,1×17,9	
350 CGI	01/07 →	215	292	LG	+Sport pack	[o]	**PF0313**	146,2×71,5×20,6	OK039/ OK059/ OK027	ATE		[-]	**PF0314**	122,5×52,1×17,9	
63 AMG	01/07 →	336	457	LG		[-]	**PF0653**	188,1×73,7×19		ATE		[-]	**PF0314**	122,5×52,1×17,9	
C T-Model (S204)															
180 CGI	08/07 →	115	156	LG		[o]	**PF0313**	146,2×71,5×20,6	OK039/ OK044	ATE		[-]	**PF0314**	122,5×52,1×17,9	
180 CGI	08/07 →	115	156	LG	+Sport pack	[o]	**PF0313**	146,2×71,5×20,6	OK039/ OK059/ OK027	ATE		[-]	**PF0314**	122,5×52,1×17,9	
180 Kompressor	08/07 →	115	156	LG		[o]	**PF0313**	146,2×71,5×20,6	OK039/ OK044	ATE		[-]	**PF0314**	122,5×52,1×17,9	

		KW	CV	SiS	i	W.i.	MAGNETI MARELLI	W×H×Th (mm)	Extra kit [Opt]	SiS	i	W.i.	MAGNETI MARELLI	W×H×Th (mm)	Extra kit [Opt]
MERCEDES-BENZ															
C T-Model (S204)															
180 Kompressor	08/07 →	115	156	LG	+Sport pack	[o]	**PF0313**	146,2×71,5×20,6	OK039/ OK059/ OK027	ATE		[-]	**PF0314**	122,5×52,1×17,9	
200 CDI	08/07 →	100	136	LG		[o]	**PF0313**	146,2×71,5×20,6	OK039/ OK044	ATE		[-]	**PF0314**	122,5×52,1×17,9	
200 CDI	08/07 →	100	136	LG	+Sport pack	[o]	**PF0313**	146,2×71,5×20,6	OK039/ OK059/ OK027	ATE		[-]	**PF0314**	122,5×52,1×17,9	
200 Kompressor	08/07 →	135	184	LG		[o]	**PF0313**	146,2×71,5×20,6	OK039/ OK044	ATE		[-]	**PF0314**	122,5×52,1×17,9	
200 Kompressor	08/07 →	135	184	LG	+Sport pack	[o]	**PF0313**	146,2×71,5×20,6	OK039/ OK059/ OK027	ATE		[-]	**PF0314**	122,5×52,1×17,9	
220 CDI	08/07 →	125	170	LG		[o]	**PF0313**	146,2×71,5×20,6	OK039/ OK044	ATE		[-]	**PF0314**	122,5×52,1×17,9	
220 CDI	08/07 →	125	170	LG	+Sport pack	[o]	**PF0313**	146,2×71,5×20,6	OK039/ OK059/ OK027	ATE		[-]	**PF0314**	122,5×52,1×17,9	
220 CDI	08/07 →	150	204	LG		[o]	**PF0313**	146,2×71,5×20,6	OK039/ OK044	ATE		[-]	**PF0314**	122,5×52,1×17,9	
220 CDI	08/07 →	150	204	LG	+Sport pack	[o]	**PF0313**	146,2×71,5×20,6	OK039/ OK059/ OK027	ATE		[-]	**PF0314**	122,5×52,1×17,9	
230	08/07 →	150	204	LG		[o]	**PF0313**	146,2×71,5×20,6	OK039/ OK044	ATE		[-]	**PF0314**	122,5×52,1×17,9	
230	08/07 →	150	204	LG	+Sport pack	[o]	**PF0313**	146,2×71,5×20,6	OK039/ OK059/ OK027	ATE		[-]	**PF0314**	122,5×52,1×17,9	
250 CDI 4-matic	08/07 →	150	204	LG	(204.282)	[o]	**PF0313**	146,2×71,5×20,6	OK039/ OK044	ATE		[-]	**PF0314**	122,5×52,1×17,9	
250 CDI 4-matic	08/07 →	150	204	LG	+Sport pack	[o]	**PF0313**	146,2×71,5×20,6	OK039/ OK059/ OK027	ATE		[-]	**PF0314**	122,5×52,1×17,9	
250 CGI	08/07 →	150	204	LG		[o]	**PF0313**	146,2×71,5×20,6	OK039/ OK044	ATE		[-]	**PF0314**	122,5×52,1×17,9	
250 CGI	08/07 →	150	204	LG	+Sport pack	[o]	**PF0313**	146,2×71,5×20,6	OK039/ OK059/ OK027	ATE		[-]	**PF0314**	122,5×52,1×17,9	
280	08/07 →	170	231	LG		[o]	**PF0313**	146,2×71,5×20,6	OK039/ OK044	ATE		[-]	**PF0314**	122,5×52,1×17,9	
280	08/07 →	170	231	LG	+Sport pack	[o]	**PF0313**	146,2×71,5×20,6	OK039/ OK059/ OK027	ATE		[-]	**PF0314**	122,5×52,1×17,9	

		KW	CV	SiS	i	W.i.	MAGNETI MARELLI	W×H×Th (mm)	Extra kit [Opt]	SiS	i	W.i.	MAGNETI MARELLI	W×H×Th (mm)	Extra kit [Opt]
MERCEDES-BENZ															
C T-Model (S204)															
320 CDI	08/07→	165	224	LG		[o]	**PF0313**	146,2×71,5×20,6	OK039/ OK044	ATE		[-]	**PF0314**	122,5×52,1×17,9	
320 CDI	08/07→	165	224	LG	+Sport pack	[o]	**PF0313**	146,2×71,5×20,6	OK039/ OK059/ OK027	ATE		[-]	**PF0314**	122,5×52,1×17,9	
350	08/07→	200	272	LG		[o]	**PF0313**	146,2×71,5×20,6	OK039/ OK044	ATE		[-]	**PF0314**	122,5×52,1×17,9	
350	08/07→	200	272	LG	+Sport pack	[o]	**PF0313**	146,2×71,5×20,6	OK039/ OK059/ OK027	ATE		[-]	**PF0314**	122,5×52,1×17,9	
350 CDI	08/07→	170	231	LG		[o]	**PF0313**	146,2×71,5×20,6	OK039/ OK044	ATE		[-]	**PF0314**	122,5×52,1×17,9	
350 CDI	08/07→	170	231	LG	+Sport pack	[o]	**PF0313**	146,2×71,5×20,6	OK039/ OK059/ OK027	ATE		[-]	**PF0314**	122,5×52,1×17,9	
350 CDI 4-matic	08/07→	170	231	LG		[o]	**PF0313**	146,2×71,5×20,6	OK039/ OK044	ATE		[-]	**PF0314**	122,5×52,1×17,9	
350 CDI 4-matic	08/07→	170	231	LG	+Sport pack	[o]	**PF0313**	146,2×71,5×20,6	OK039/ OK059/ OK027	ATE		[-]	**PF0314**	122,5×52,1×17,9	
63 AMG	08/07→	336	457	LG		[o]	**PF0313**	146,2×71,5×20,6	OK039/ OK044	ATE		[-]	**PF0314**	122,5×52,1×17,9	
C AMG (S204)															
36 Sport	94→97	206		ATE		[o]	**PF0310**	150,1×59,4×19,5	OK020						
C Coupé (C204)															
180	06/11→	115	156	LG		[o]	**PF0313**	146,2×71,5×20,6	OK039/ OK044	ATE		[-]	**PF0314**	122,5×52,1×17,9	
180	06/11→	115	156	LG	+Sport pack	[o]	**PF0313**	146,2×71,5×20,6	OK039/ OK059/ OK027	ATE		[-]	**PF0314**	122,5×52,1×17,9	
220 CDI	06/11→	125	170	LG		[o]	**PF0313**	146,2×71,5×20,6	OK039/ OK044	ATE		[-]	**PF0314**	122,5×52,1×17,9	
220 CDI	06/11→	125	170	LG	+Sport pack	[o]	**PF0313**	146,2×71,5×20,6	OK039/ OK059/ OK027	ATE		[-]	**PF0314**	122,5×52,1×17,9	
250	06/11→	150	204	LG		[o]	**PF0313**	146,2×71,5×20,6	OK039/ OK044	ATE		[-]	**PF0314**	122,5×52,1×17,9	
250	06/11→	150	204	LG	+Sport pack	[o]	**PF0313**	146,2×71,5×20,6	OK039/ OK059/ OK027	ATE		[-]	**PF0314**	122,5×52,1×17,9	
250 CDI	06/11→	150	204	LG		[o]	**PF0313**	146,2×71,5×20,6	OK039/ OK044	ATE		[-]	**PF0314**	122,5×52,1×17,9	

		KW	CV	SiS	i	W.i.	MAGNETI MARELLI	W×H×Th (mm)	Extra kit [Opt]	SiS	i	W.i.	MAGNETI MARELLI	W×H×Th (mm)	Extra kit [Opt]
MERCEDES-BENZ															
C Coupé (C204)															
250 CDI	06/11→	150	204	LG	+Sport pack	[o]	**PF0313**	146,2×71,5×20,6	OK039/ OK059/ OK027	ATE		[-]	**PF0314**	122,5×52,1×17,9	
350	06/11→	225	306	LG		[o]	**PF0313**	146,2×71,5×20,6	OK039/ OK044	ATE		[-]	**PF0314**	122,5×52,1×17,9	
350	06/11→	225	306	LG	+Sport pack	[o]	**PF0313**	146,2×71,5×20,6	OK039/ OK059/ OK027	ATE		[-]	**PF0314**	122,5×52,1×17,9	
63 AMG	06/11→	336	457	LG		[-]	**PF0653**	188,1×73,7×19		ATE		[-]	**PF0314**	122,5×52,1×17,9	
Citan Mixto (415)															
109 CDI	11/12→	66	90	LG	14"	[-]	**PF0347**	116,5×52,4×17	OK030	LG		[-]	**PF0660**	95,5×44,1×16	OK030
109 CDI	11/12→	66	90	LG	15"/16"	[-]	**PF0661**	131,2×62,3×18,6	OK030	LG		[-]	**PF0660**	95,5×44,1×16	OK030
111 CDI	06/13→	81	110	LG	(415.601, 415.603, 415.605) 14"	[-]	**PF0347**	116,5×52,4×17	OK030	LG		[-]	**PF0660**	95,5×44,1×16	OK030
111 CDI	06/13→	81	110	LG	(415.601, 415.603, 415.605) 15"/16"	[-]	**PF0661**	131,2×62,3×18,6	OK030	LG		[-]	**PF0660**	95,5×44,1×16	OK030
Citan Combi (415)															
108 CDI	11/12→	55	75	LG	14"	[-]	**PF0347**	116,5×52,4×17	OK030	LG		[-]	**PF0660**	95,5×44,1×16	OK030
108 CDI	11/12→	55	75	LG	15"/16"	[-]	**PF0661**	131,2×62,3×18,6	OK030	LG		[-]	**PF0660**	95,5×44,1×16	OK030
109 CDI	11/12→	66	90	LG	14"	[-]	**PF0347**	116,5×52,4×17	OK030	LG		[-]	**PF0660**	95,5×44,1×16	OK030
109 CDI	11/12→	66	90	LG	15"/16"	[-]	**PF0661**	131,2×62,3×18,6	OK030	LG		[-]	**PF0660**	95,5×44,1×16	OK030
111 CDI	06/13→	81	110	LG	(415.601, 415.603, 415.605) 14"	[-]	**PF0347**	116,5×52,4×17	OK030	LG		[-]	**PF0660**	95,5×44,1×16	OK030
111 CDI	06/13→	81	110	LG	(415.601, 415.603, 415.605) 15"/16"	[-]	**PF0661**	131,2×62,3×18,6	OK030	LG		[-]	**PF0660**	95,5×44,1×16	OK030
112	06/13→	84	114	LG	(415.603, 415.605) 14"	[-]	**PF0347**	116,5×52,4×17	OK030	LG		[-]	**PF0660**	95,5×44,1×16	OK030
112	06/13→	84	114	LG	(415.603, 415.605) 15"/16"	[-]	**PF0661**	131,2×62,3×18,6	OK030	LG		[-]	**PF0660**	95,5×44,1×16	OK030
Citan SW (415)															
108 CDI	11/12→	55	75	LG	14"	[-]	**PF0347**	116,5×52,4×17	OK030	LG		[-]	**PF0660**	95,5×44,1×16	OK030
108 CDI	11/12→	55	75	LG	15"/16"	[-]	**PF0661**	131,2×62,3×18,6	OK030	LG		[-]	**PF0660**	95,5×44,1×16	OK030
109 CDI	11/12→	66	90	LG	14"	[-]	**PF0347**	116,5×52,4×17	OK030	LG		[-]	**PF0660**	95,5×44,1×16	OK030
109 CDI	11/12→	66	90	LG	15"/16"	[-]	**PF0661**	131,2×62,3×18,6	OK030	LG		[-]	**PF0660**	95,5×44,1×16	OK030

		KW	CV	SiS	i	W.i.	MAGNETI MARELLI	W×H×Th (mm)	Extra kit [Opt]	SiS	i	W.i.	MAGNETI MARELLI	W×H×Th (mm)	Extra kit [Opt]
MERCEDES-BENZ															
Citan SW (415)															
111 CDI	06/13→	81	110	LG	(415.703) 14"	[-]	**PF0347**	116,5×52,4×17	OK030	LG		[-]	**PF0660**	95,5×44,1×16	OK030
111 CDI	06/13→	81	110	LG	(415.703) 15"/16"	[-]	**PF0661**	131,2×62,3×18,6	OK030	LG		[-]	**PF0660**	95,5×44,1×16	OK030
112	06/13→	84	114	LG	(415.703) 14"	[-]	**PF0347**	116,5×52,4×17	OK030	LG		[-]	**PF0660**	95,5×44,1×16	OK030
112 (415.703)	06/13→	84	114	LG	15"/16"	[-]	**PF0661**	131,2×62,3×18,6	OK030	LG		[-]	**PF0660**	95,5×44,1×16	OK030
CL (215)															
500	03/99→			BR		[o]	**PF0320**	119,8×71,6×17,2							
CLA Coupé (C117)															
180 CDI	01/13→	80	109	LG	+Sport pack	[o]	**PF0734**	144,1×71,7×19,3	OK030	LG		[o]	**PF0736**	106,4×59,1×18,4	OK039
180	01/13→	90	122	LG	+Sport pack	[o]	**PF0734**	144,1×71,7×19,3	OK030	LG		[o]	**PF0736**	106,4×59,1×18,4	OK039
200	01/13→	115	156	LG	+Sport pack	[o]	**PF0734**	144,1×71,7×19,3	OK030	LG		[o]	**PF0736**	106,4×59,1×18,4	OK039
220 CDI	01/13→	120	163	LG	+Sport pack	[o]	**PF0734**	144,1×71,7×19,3	OK030	LG		[o]	**PF0736**	106,4×59,1×18,4	OK039
220 CDI	01/13→	125	170	LG	+Sport pack	[o]	**PF0734**	144,1×71,7×19,3	OK030	LG		[o]	**PF0736**	106,4×59,1×18,4	OK039
250	01/13→	155	211	LG	+Sport pack	[o]	**PF0734**	144,1×71,7×19,3	OK030	LG		[o]	**PF0736**	106,4×59,1×18,4	OK039
250	07/13→	155	211	LG	+Sport pack	[o]	**PF0734**	144,1×71,7×19,3	OK030	LG		[o]	**PF0736**	106,4×59,1×18,4	OK039
45 AMG	07/13→	265	360	LG	+Sport pack	[o]	**PF0734**	144,1×71,7×19,3	OK030	LG		[o]	**PF0736**	106,4×59,1×18,4	OK039
CLC (203)															
160	02/09→	95	129	LG	(203.731)	[o]	**PF0312**	131,1×69,8×19,5	OK037/ OK017/ OK024	ATE		[-]	**PF0311**	63,8×73×14,2	
180 Kompressor	05/08→	105	143	LG	(203.746)	[o]	**PF0312**	131,1×69,8×19,5	OK037/ OK017/ OK024	ATE		[-]	**PF0311**	63,8×73×14,2	
200 CDI	05/08→	90	122	LG	(203.707)	[o]	**PF0312**	131,1×69,8×19,5	OK037/ OK017/ OK024	ATE		[-]	**PF0311**	63,8×73×14,2	
200 Kompressor	05/08→	135	184	LG	(203.741)	[o]	**PF0312**	131,1×69,8×19,5	OK037/ OK017/ OK024	ATE		[-]	**PF0311**	63,8×73×14,2	
220 CDI	05/08→	110	150	LG	(203.708)	[o]	**PF0312**	131,1×69,8×19,5	OK037/ OK017/ OK024	ATE		[-]	**PF0311**	63,8×73×14,2	
230	05/08→	150	204	LG	(203.752)	[o]	**PF0312**	131,1×69,8×19,5	OK037/ OK017/ OK024	ATE		[-]	**PF0311**	63,8×73×14,2	
350	05/08→	200	272	LG	(203.756)	[o]	**PF0312**	131,1×69,8×19,5	OK037/ OK017/ OK024	ATE		[-]	**PF0311**	63,8×73×14,2	

		KW	CV	SiS	i	W.i.	MAGNETI MARELLI	W×H×Th (mm)	Extra kit [Opt]	SiS	i	W.i.	MAGNETI MARELLI	W×H×Th (mm)	Extra kit [Opt]
MERCEDES-BENZ															
CLK (208)															
200	97 → 06/02			ATE		[o]	**PF0310**	150,1×59,4×19,5	OK020	ATE		[o]	**PF0307**	61,7×58,5×15,2	
200	97 → 06/02			ATE		[o]	**PF0310**	150,1×59,4×19,5	OK020	ATE	15"	[-]	**PF0311**	63,8×73×14,2	
200 Kompressor	97 → 06/02			ATE		[o]	**PF0310**	150,1×59,4×19,5	OK020	ATE		[o]	**PF0307**	61,7×58,5×15,2	
200 Kompressor	97 → 06/02			ATE		[o]	**PF0310**	150,1×59,4×19,5	OK020	ATE	15"	[-]	**PF0311**	63,8×73×14,2	
230 Kompressor	97 → 06/02			ATE		[o]	**PF0310**	150,1×59,4×19,5	OK020	ATE		[o]	**PF0307**	61,7×58,5×15,2	
230 Kompressor	97 → 06/02			ATE		[o]	**PF0310**	150,1×59,4×19,5	OK020	ATE	15"	[-]	**PF0311**	63,8×73×14,2	
300i	97 → 06/02			ATE		[o]	**PF0315**	156,4×63,8×20	OK020	ATE		[o]	**PF0303**	61,7×69,8×15,2	
430	07/98 → 06/02	205	279							ATE		[o]	**PF0303**	61,7×69,8×15,2	
430 Cabriolet	09/98 → 03/02	205	279							ATE		[o]	**PF0303**	61,7×69,8×15,2	
CLK (C209)															
200	06/02 → 09			LG		[o]	**PF0312**	131,1×69,8×19,5	OK037/ OK017/ OK024	ATE		[-]	**PF0311**	63,8×73×14,2	
200 Cgi	06/02 → 09			LG		[o]	**PF0312**	131,1×69,8×19,5	OK037/ OK017/ OK024	ATE		[-]	**PF0311**	63,8×73×14,2	
240	06/02 → 09			LG		[o]	**PF0312**	131,1×69,8×19,5	OK037/ OK017/ OK024	ATE		[-]	**PF0311**	63,8×73×14,2	
270 Cdi	06/02 → 09			LG		[o]	**PF0312**	131,1×69,8×19,5	OK037/ OK017/ OK024	ATE		[o]	**PF0553**	63,7×78,2×15,8	
320	06/02 → 09			LG		[o]	**PF0312**	131,1×69,8×19,5	OK037/ OK017/ OK024	ATE		[-]	**PF0311**	63,8×73×14,2	
500	05/02 → 09			BR		[o]	**PF0585**	119,8×71,6×17,2							
55 AMG	09/02 → 09			BR		[o]	**PF0585**	119,8×71,6×17,2		ATE		[o]	**PF0303**	61,7×69,8×15,2	
CLK Cabriolet (A209)															
200 Kompressor	02/03 →			LG		[o]	**PF0312**	131,1×69,8×19,5	OK037/ OK017/ OK024	ATE		[-]	**PF0311**	63,8×73×14,2	
200 Cgi	07/03 →			LG		[o]	**PF0312**	131,1×69,8×19,5	OK037/ OK017/ OK024	ATE		[-]	**PF0311**	63,8×73×14,2	
240	02/03 →			LG		[o]	**PF0312**	131,1×69,8×19,5	OK037/ OK017/ OK024	ATE		[o]	**PF0553**	63,7×78,2×15,8	
320	02/03 →			LG		[o]	**PF0312**	131,1×69,8×19,5	OK037/ OK017/ OK024	ATE		[o]	**PF0553**	63,7×78,2×15,8	

		KW	CV	SiS	i	W.i.	MAGNETI MARELLI	W×H×Th (mm)	Extra kit [Opt]	SiS	i	W.i.	MAGNETI MARELLI	W×H×Th (mm)	Extra kit [Opt]
MERCEDES-BENZ															
CLK Cabriolet (A209)															
500	05/03→			BR	+Sport pack	[o]	**PF0585**	119,8×71,6×17,2							
55 AMG	05/03→			BR		[o]	**PF0585**	119,8×71,6×17,2		ATE		[o]	**PF0303**	61,7×69,8×15,2	
CLS (C219)															
280	07/08→	170	231	BR	(219.354)	[o]	**PF0585**	119,8×71,6×17,2		ATE		[-]	**PF0316**	141,3×57,4×16,5	
320 CDI	01/05→	165	224	BR	(219.322)	[o]	**PF0585**	119,8×71,6×17,2		ATE		[-]	**PF0316**	141,3×57,4×16,5	
350	10/04→	200	272	BR	(219.356)	[o]	**PF0585**	119,8×71,6×17,2		ATE		[-]	**PF0316**	141,3×57,4×16,5	
350	04/06→	215	292	BR	(219.357)	[o]	**PF0585**	119,8×71,6×17,2		ATE		[-]	**PF0316**	141,3×57,4×16,5	
350 CDI	04/09→	165	224	BR	(219.322)	[o]	**PF0585**	119,8×71,6×17,2		ATE		[-]	**PF0316**	141,3×57,4×16,5	
350 CGI	04/09→	215	292	BR	(219.357)	[o]	**PF0585**	119,8×71,6×17,2		ATE		[-]	**PF0316**	141,3×57,4×16,5	
500	04/06→	285	388	BR	(219.372)	[o]	**PF0585**	119,8×71,6×17,2		ATE		[-]	**PF0316**	141,3×57,4×16,5	
500	10/04→	225	306	BR	(219.375)	[o]	**PF0585**	119,8×71,6×17,2		ATE		[-]	**PF0316**	141,3×57,4×16,5	
CLS 55 AMG	01/05→	350	476	BR	(219.376)	[o]	**PF0585**	119,8×71,6×17,2		ATE		[-]	**PF0316**	141,3×57,4×16,5	
CLS 63 AMG	04/06→	378	514	BR	(219.377)	[o]	**PF0585**	119,8×71,6×17,2		ATE		[-]	**PF0316**	141,3×57,4×16,5	
CLS (C218)															
250 CDI	01/11→	150	204	LG	(218.303) +Sport pack	[-]	**PF0653**	188,1×73,7×19							
250 CDI	01/11→	150	204	LG	(218.303) +Sport pack	[+]	**PF0654**	188,1×73,7×19							
350	01/11→	225	306	LG	(218.359) +Sport pack	[-]	**PF0653**	188,1×73,7×19							
350	01/11→	225	306	LG	(218.359) +Sport pack	[+]	**PF0654**	188,1×73,7×19							
350 CDI	01/11→	195	265	LG	(218.323) +Sport pack	[-]	**PF0653**	188,1×73,7×19							
350 CDI	01/11→	195	265	LG	(218.323) +Sport pack	[+]	**PF0654**	188,1×73,7×19							
350 CDI 4-matic	01/11→	195	265	LG	+Sport pack	[-]	**PF0653**	188,1×73,7×19							
350 CDI 4-matic	01/11→	195	265	LG	+Sport pack	[+]	**PF0654**	188,1×73,7×19							
E (W124)															
200	06/93→06/95	100	136							ATE		[o]	**PF0307**	61,7×58,5×15,2	
200 D	06/93→06/95	55	75							ATE		[o]	**PF0307**	61,7×58,5×15,2	
220	06/93→06/95	110	150							ATE		[o]	**PF0307**	61,7×58,5×15,2	
250 D	07/93→06/95	83	113							ATE		[o]	**PF0307**	61,7×58,5×15,2	
250 Turbo-D	06/93→06/95	93	126							ATE		[o]	**PF0307**	61,7×58,5×15,2	
280	06/93→06/95	145	197	ATE		[o]				ATE		[o]	**PF0307**	61,7×58,5×15,2	
280 long	06/93→06/95	142	193	ATE		[o]				ATE		[o]	**PF0307**	61,7×58,5×15,2	
300 4-matic	06/93→06/95	132	180							ATE		[o]	**PF0307**	61,7×58,5×15,2	
300 D	07/93→06/95	100	136							ATE		[o]	**PF0307**	61,7×58,5×15,2	
300 Turbo-D	06/93→06/95	108	147							ATE		[o]	**PF0307**	61,7×58,5×15,2	
300 Turbo-D 4-matic	06/93→06/95	108	147							ATE		[o]	**PF0307**	61,7×58,5×15,2	
320	06/93→06/95	162	220	ATE		[o]				ATE		[o]	**PF0307**	61,7×58,5×15,2	

		KW	CV	SiS	i	W.i.	MAGNETI MARELLI	W×H×Th (mm)	Extra kit [Opt]	SiS	i	W.i.	MAGNETI MARELLI	W×H×Th (mm)	Extra kit [Opt]
MERCEDES-BENZ															
E (W124)															
36 AMG	07/94 → 01/95	200	269	ATE		[o]				ATE		[o]	**PF0307**	61,7×58,5×15,2	
420	06/93 → 06/95	205	279	ATE		[o]				ATE		[o]	**PF0307**	61,7×58,5×15,2	
500	06/93 → 06/95	235	320							ATE		[o]	**PF0307**	61,7×58,5×15,2	
60 AMG	05/94 → 06/95	280	381							ATE		[o]	**PF0307**	61,7×58,5×15,2	
E (W124-S124)															
200 2.0 /SW	85 → 06/97									ATE		[-]	**PF0304**	61,7×54,2×13,5	
200 2.0 /SW	85 → 06/97									ATE		[o]	**PF0307**	61,7×58,5×15,2	
200 2.0i 16V /SW	85 → 06/97									ATE		[-]	**PF0304**	61,7×54,2×13,5	
200 2.0i 16V /SW	85 → 06/97									ATE		[o]	**PF0307**	61,7×58,5×15,2	
200 2.0 D /SW	85 → 06/97									ATE		[-]	**PF0304**	61,7×54,2×13,5	
200 2.0 D /SW	85 → 06/97									ATE		[o]	**PF0307**	61,7×58,5×15,2	
200 2.2i 16V SW	92 → 97									ATE		[o]	**PF0307**	61,7×58,5×15,2	
220 2.2i 16V	92 → 06/95									ATE		[-]	**PF0304**	61,7×54,2×13,5	
230 2.3	85 → 06/95									ATE		[-]	**PF0304**	61,7×54,2×13,5	
230 2.3 SW	85 → 97									ATE		[o]	**PF0307**	61,7×58,5×15,2	
250 2.5 D	85 → 97									ATE		[o]	**PF0307**	61,7×58,5×15,2	
250 2.5 D - TD	85 → 97									ATE		[-]	**PF0304**	61,7×54,2×13,5	
250 2.5 TD SW	85 → 97									ATE		[o]	**PF0307**	61,7×58,5×15,2	
260 2.6	85 → 97									ATE		[-]	**PF0304**	61,7×54,2×13,5	
260 2.6 SW	86 → 97									ATE		[o]	**PF0307**	61,7×58,5×15,2	
280 2.8	06/93 → 95									ATE		[o]	**PF0307**	61,7×58,5×15,2	
280 2.8	06/93 → 95									ATE		[o]	**PF0307**	61,7×58,5×15,2	
280 2.8 T SW	06/93 → 97									ATE		[o]	**PF0307**	61,7×58,5×15,2	
280 2.8 T SW	06/93 → 97									ATE		[o]	**PF0307**	61,7×58,5×15,2	
300 3.0 SW	85 → 97									ATE		[o]	**PF0307**	61,7×58,5×15,2	
300 3.0 SW 4-Matic	06/93 → 97									ATE		[o]	**PF0307**	61,7×58,5×15,2	
300 3.0	85 → 97									ATE		[-]	**PF0304**	61,7×54,2×13,5	
300 3.0i 24V	89 → 06/95									ATE		[o]	**PF0307**	61,7×58,5×15,2	
300 3.0 TD 4-Matic	06/93 → 06/95									ATE		[-]	**PF0304**	61,7×54,2×13,5	
300 3.0 TD SW 4-Matic T.	06/93 → 97									ATE		[o]	**PF0307**	61,7×58,5×15,2	
320 3.2i 24V	89 → 06/95									ATE		[o]	**PF0307**	61,7×58,5×15,2	
400 4.0	92 → 06/95									ATE		[o]	**PF0307**	61,7×58,5×15,2	
420 4.2	92 → 06/95									ATE		[o]	**PF0307**	61,7×58,5×15,2	
500 5.0	92 → 06/95									ATE		[o]	**PF0307**	61,7×58,5×15,2	

		KW	CV	SiS	i	W.i.	MAGNETI MARELLI	W×H×Th (mm)	Extra kit [Opt]	SiS	i	W.i.	MAGNETI MARELLI	W×H×Th (mm)	Extra kit [Opt]
MERCEDES-BENZ															
E Cabriolet (W124)															
200	06/93 → 97									ATE		[o]	**PF0307**	61,7×58,5×15,2	
220	06/93 → 97									ATE		[o]	**PF0307**	61,7×58,5×15,2	
320	06/93 → 97									ATE		[o]	**PF0307**	61,7×58,5×15,2	
320	06/93 → 97			ATE		[o]				ATE		[o]	**PF0307**	61,7×58,5×15,2	
36 AMG	05/94 → 97			ATE		[o]				ATE		[o]	**PF0307**	61,7×58,5×15,2	
E (W210)															
200	95 → 03/02			ATE		[o]	**PF0310**	150,1×59,4×19,5	OK020	ATE		[o]	**PF0307**	61,7×58,5×15,2	
200 SW	96 → 03/03			ATE		[o]	**PF0310**	150,1×59,4×19,5	OK020						
200 Kompressor	97 → 00	141		ATE		[o]	**PF0315**	156,4×63,8×20	OK020	ATE		[o]	**PF0553**	63,7×78,2×15,8	
200 Kompressor	08/00 → 03/02			ATE		[o]	**PF0315**	156,4×63,8×20	OK020	ATE		[o]	**PF0553**	63,7×78,2×15,8	
220	95 → 03/02			ATE		[o]	**PF0310**	150,1×59,4×19,5	OK020	ATE		[o]	**PF0307**	61,7×58,5×15,2	
220 SW	96 → 03/03			ATE		[o]	**PF0310**	150,1×59,4×19,5	OK020						
230	95 → 03/02			ATE		[o]	**PF0310**	150,1×59,4×19,5	OK020	ATE		[o]	**PF0307**	61,7×58,5×15,2	
230 SW	96 → 03/03			ATE		[o]	**PF0310**	150,1×59,4×19,5	OK020						
240	97 → 00	125		ATE		[o]	**PF0315**	156,4×63,8×20	OK020	ATE		[o]	**PF0553**	63,7×78,2×15,8	
240	08/00 → 03/02			ATE		[o]	**PF0315**	156,4×63,8×20	OK020	ATE		[o]	**PF0553**	63,7×78,2×15,8	
250	95 → 03/02			ATE		[o]	**PF0310**	150,1×59,4×19,5	OK020	ATE		[o]	**PF0307**	61,7×58,5×15,2	
250 SW	96 → 03/03			ATE		[o]	**PF0310**	150,1×59,4×19,5	OK020						
270 D	97 → 00	125		ATE		[o]	**PF0315**	156,4×63,8×20	OK020	ATE		[o]	**PF0553**	63,7×78,2×15,8	
270 Cdi	07/99 → 03/02			ATE		[o]	**PF0315**	156,4×63,8×20	OK020	ATE		[o]	**PF0553**	63,7×78,2×15,8	
280	95 → 03/02			ATE		[o]	**PF0315**	156,4×63,8×20	OK020	ATE		[o]	**PF0307**	61,7×58,5×15,2	
280 SW	96 → 03/03			ATE		[o]	**PF0315**	156,4×63,8×20	OK020	ATE		[o]	**PF0307**	61,7×58,5×15,2	
280	97 → 00	142		ATE		[o]	**PF0315**	156,4×63,8×20	OK020	ATE		[o]	**PF0553**	63,7×78,2×15,8	
280	97 → 00	150		ATE		[o]	**PF0315**	156,4×63,8×20	OK020	ATE		[o]	**PF0553**	63,7×78,2×15,8	
280	01/96 → 03/02			ATE		[o]	**PF0315**	156,4×63,8×20	OK020	ATE		[o]	**PF0553**	63,7×78,2×15,8	
280 4-Matic	12/96 → 03/02			ATE		[o]	**PF0315**	156,4×63,8×20	OK020	ATE		[o]	**PF0553**	63,7×78,2×15,8	
300	96 → 03/02			ATE		[o]	**PF0315**	156,4×63,8×20	OK020	ATE		[o]	**PF0307**	61,7×58,5×15,2	
300 SW	96 → 03/03			ATE		[o]	**PF0315**	156,4×63,8×20	OK020						
300 D	97 → 00	130		ATE		[o]	**PF0315**	156,4×63,8×20	OK020	ATE		[o]	**PF0553**	63,7×78,2×15,8	
320	95 → 03/02			ATE		[o]	**PF0315**	156,4×63,8×20	OK020	ATE		[o]	**PF0307**	61,7×58,5×15,2	
320 SW	96 → 03/02			ATE		[o]	**PF0315**	156,4×63,8×20	OK020						
320	06/97 → 03/02			ATE		[o]	**PF0315**	156,4×63,8×20	OK020	ATE		[o]	**PF0553**	63,7×78,2×15,8	
320 4-Matec	06/97 → 03/02			ATE		[o]	**PF0315**	156,4×63,8×20	OK020	ATE		[o]	**PF0553**	63,7×78,2×15,8	
320	96 → 03/02	165		ATE		[o]	**PF0315**	156,4×63,8×20	OK020	ATE		[o]	**PF0553**	63,7×78,2×15,8	
320 D	99 → 03/02	145		ATE		[o]	**PF0315**	156,4×63,8×20	OK020	ATE		[o]	**PF0553**	63,7×78,2×15,8	
320 Cdi	07/99 → 03/02			ATE		[o]	**PF0315**	156,4×63,8×20	OK020	ATE		[o]	**PF0553**	63,7×78,2×15,8	
420	96 → 97	205								ATE		[o]	**PF0553**	63,7×78,2×15,8	
430	97 → 03/02	205								ATE		[o]	**PF0553**	63,7×78,2×15,8	
500	95 → 03/02			ATE		[o]	**PF0315**	156,4×63,8×20	OK020	ATE		[o]	**PF0307**	61,7×58,5×15,2	

		KW	CV	SiS	i	W.i.	MAGNETI MARELLI	W×H×Th (mm)	Extra kit [Opt]	SiS	i	W.i.	MAGNETI MARELLI	W×H×Th (mm)	Extra kit [Opt]
MERCEDES-BENZ															
E (W211)															
200 CDI	07/02 →	75	102	BSC	(211.004)	[o]	**PF0318**	136,9×67,8×20	OK012/ OK026/ OK078	ATE		[-]	**PF0316**	141,3×57,4×16,5	
200 CDI	07/02 →	90	122	BSC	(211.004)	[o]	**PF0318**	136,9×67,8×20	OK012/ OK026/ OK078	ATE		[-]	**PF0316**	141,3×57,4×16,5	
200 CDI	04/06 →	100	136	BSC	(211.007)	[o]	**PF0318**	136,9×67,8×20	OK012/ OK026/ OK078	ATE		[-]	**PF0316**	141,3×57,4×16,5	
200 CGI	11/02 →	125	170	BSC		[o]	**PF0318**	136,9×67,8×20	OK012/ OK026/ OK078	ATE		[-]	**PF0316**	141,3×57,4×16,5	
200 Kompressor	04/06 →	135	184	BSC	(211.041)	[o]	**PF0318**	136,9×67,8×20	OK012/ OK026/ OK078	ATE		[-]	**PF0316**	141,3×57,4×16,5	
200 Kompressor	11/02 →	120	163	BSC	(211.042)	[o]	**PF0318**	136,9×67,8×20	OK012/ OK026/ OK078	ATE		[-]	**PF0316**	141,3×57,4×16,5	
220 CDI	03/03 →	120	163	BSC		[o]	**PF0318**	136,9×67,8×20	OK012/ OK026/ OK078	ATE		[-]	**PF0316**	141,3×57,4×16,5	
220 CDI	03/02 →	110	150	BSC	(211.006)	[o]	**PF0318**	136,9×67,8×20	OK012/ OK026/ OK078	ATE		[-]	**PF0316**	141,3×57,4×16,5	
220 CDI	03/02 →	100	136	BSC	(211.006)	[o]	**PF0318**	136,9×67,8×20	OK012/ OK026/ OK078	ATE		[-]	**PF0316**	141,3×57,4×16,5	
220 CDI	04/06 →	125	170	BSC	(211.008)	[o]	**PF0318**	136,9×67,8×20	OK012/ OK026/ OK078	ATE		[-]	**PF0316**	141,3×57,4×16,5	
230	09/07 →	150	204	BSC		[o]	**PF0318**	136,9×67,8×20	OK012/ OK026/ OK078	ATE		[-]	**PF0316**	141,3×57,4×16,5	
240	03/02 →	130	177	BSC	(211.061)	[o]	**PF0318**	136,9×67,8×20	OK012/ OK026/ OK078	ATE		[-]	**PF0316**	141,3×57,4×16,5	
240 4-matic	03/03 →	130	177	BSC	(211.080)	[o]	**PF0318**	136,9×67,8×20	OK012/ OK026/ OK078	ATE		[-]	**PF0316**	141,3×57,4×16,5	
250 CDI	08/08 →	150	204	BSC		[o]	**PF0318**	136,9×67,8×20	OK012/ OK026/ OK078	ATE		[-]	**PF0316**	141,3×57,4×16,5	

		KW	CV													
				SiS	i	W.i.	MAGNETI MARELLI	W×H×Th (mm)	Extra kit [Opt]	SiS	i	W.i.	MAGNETI MARELLI	W×H×Th (mm)	Extra kit [Opt]
MERCEDES-BENZ															
E (W211)															
270 CDI	03/02→	130	177	BSC	(211.016)	[o]	**PF0318**	136,9×67,8×20	OK012/ OK026/ OK078	ATE		[-]	**PF0316**	141,3×57,4×16,5	
280	03/05→	170	231	BSC	(211.054)	[o]	**PF0318**	136,9×67,8×20	OK012/ OK026/ OK078	ATE		[-]	**PF0316**	141,3×57,4×16,5	
280 4-matic	01/06→	170	231	BSC	(211.092)	[o]	**PF0318**	136,9×67,8×20	OK012/ OK026/ OK078	ATE		[-]	**PF0316**	141,3×57,4×16,5	
280 CDI	03/05→	140	190	BSC	(211.020)	[o]	**PF0318**	136,9×67,8×20	OK012/ OK026/ OK078	ATE		[-]	**PF0316**	141,3×57,4×16,5	
280 CDI	05/04→	130	177	BSC	(211.023)	[o]	**PF0318**	136,9×67,8×20	OK012/ OK026/ OK078	ATE		[-]	**PF0316**	141,3×57,4×16,5	
280 CDI 4-matic	03/05→	140	190	BSC		[o]	**PF0318**	136,9×67,8×20	OK012/ OK026/ OK078	ATE		[-]	**PF0316**	141,3×57,4×16,5	
300 BLUETEC	09/07→	155	211	BSC		[o]	**PF0318**	136,9×67,8×20	OK012/ OK026/ OK078	ATE		[-]	**PF0316**	141,3×57,4×16,5	
320	03/02→	165	224	BSC	(211.065)	[o]	**PF0318**	136,9×67,8×20	OK012/ OK026/ OK078	ATE		[-]	**PF0316**	141,3×57,4×16,5	
320 4-matic	03/03→	165	224	BSC	(211.082)	[o]	**PF0318**	136,9×67,8×20	OK012/ OK026/ OK078	ATE		[-]	**PF0316**	141,3×57,4×16,5	
320 CDI	03/05→	165	224	BSC	(211.022)	[o]	**PF0318**	136,9×67,8×20	OK012/ OK026/ OK078	ATE		[-]	**PF0316**	141,3×57,4×16,5	
320 CDI	11/02→	150	204	BSC	(211.026)	[o]	**PF0318**	136,9×67,8×20	OK012/ OK026/ OK078	ATE		[-]	**PF0316**	141,3×57,4×16,5	
320 CDI 4-matic	03/05→	165	224	BSC		[o]	**PF0318**	136,9×67,8×20	OK012/ OK026/ OK078	ATE		[-]	**PF0316**	141,3×57,4×16,5	
350 CGI	09/07→	215	292	BSC		[o]	**PF0318**	136,9×67,8×20	OK012/ OK026/ OK078	ATE		[-]	**PF0316**	141,3×57,4×16,5	
320 CDI 4-matic	03/05→	165	224	BR		[o]	**PF0585**	119,8×71,6×17,2		ATE		[-]	**PF0316**	141,3×57,4×16,5	
350	03/05→	200	272	BSC	(211.056)	[o]	**PF0318**	136,9×67,8×20	OK012/ OK026/ OK078	ATE		[-]	**PF0316**	141,3×57,4×16,5	

		KW	CV													
				SiS	i	W.i.	MAGNETI MARELLI	W×H×Th (mm)	Extra kit [Opt]	SiS	i	W.i.	MAGNETI MARELLI	W×H×Th (mm)	Extra kit [Opt]
MERCEDES-BENZ																
E (W211)																
350	03/05 →	200	272	BR	(211.056)	[o]	**PF0585**	119,8×71,6×17,2		ATE		[-]	**PF0316**	141,3×57,4×16,5	
350 4-matic	03/05 →	200	272	BSC	(211.087)	[o]	**PF0318**	136,9×67,8×20	OK012/ OK026/ OK078	ATE		[-]	**PF0316**	141,3×57,4×16,5	
350 4-matic	03/05 →	200	272	BR	(211.087)	[o]	**PF0585**	119,8×71,6×17,2		ATE		[-]	**PF0316**	141,3×57,4×16,5	
3.5 4-matic	08/04 → 08/06	205	279	BSC		[o]	**PF0318**	136,9×67,8×20	OK012/ OK026/ OK078	ATE		[-]	**PF0316**	141,3×57,4×16,5	
350 CGI	09/07 →	215	292	BSC		[o]	**PF0318**	136,9×67,8×20	OK012/ OK026/ OK078	ATE		[-]	**PF0316**	141,3×57,4×16,5	
350 CGI	09/07 →	215	292	BR		[o]	**PF0585**	119,8×71,6×17,2		ATE		[-]	**PF0316**	141,3×57,4×16,5	
400 CDI	02/03 →	191	260	BR	(211.028)	[o]	**PF0585**	119,8×71,6×17,2		ATE		[-]	**PF0316**	141,3×57,4×16,5	
420 CDI	01/06 →	231	314	BR	(211.029)	[o]	**PF0585**	119,8×71,6×17,2		ATE		[-]	**PF0316**	141,3×57,4×16,5	
500	03/02 →	225	306	BR	(211.070)	[o]	**PF0585**	119,8×71,6×17,2		ATE		[-]	**PF0316**	141,3×57,4×16,5	
500	04/06 →	285	388	BR	(211.072)	[o]	**PF0585**	119,8×71,6×17,2		ATE		[-]	**PF0316**	141,3×57,4×16,5	
500 4-matic	10/03 →	225	306	BR	(211.083)	[o]	**PF0585**	119,8×71,6×17,2		ATE		[-]	**PF0316**	141,3×57,4×16,5	
500 4-matic	04/06 →	285	388	BR	(211.090)	[o]	**PF0585**	119,8×71,6×17,2		ATE		[-]	**PF0316**	141,3×57,4×16,5	
E T-Model SW (S211)																
200 CDI	04/06 →	100	136	BSC	(211.207)	[o]	**PF0318**	136,9×67,8×20	OK012/ OK026/ OK078	ATE		[-]	**PF0316**	141,3×57,4×16,5	
200 Kompressor	04/06 →	135	184	BSC	(211.241)	[o]	**PF0318**	136,9×67,8×20	OK012/ OK026/ OK078	ATE		[-]	**PF0316**	141,3×57,4×16,5	
200 T Kompressor	03/03 →	120	163	BSC	(211.242)	[o]	**PF0318**	136,9×67,8×20	OK012/ OK026/ OK078	ATE		[-]	**PF0316**	141,3×57,4×16,5	
220 CDI	03/03 →	100	136	BSC	(211.206)	[o]	**PF0318**	136,9×67,8×20	OK012/ OK026/ OK078	ATE		[-]	**PF0316**	141,3×57,4×16,5	
220 T CDI	03/03 →	120	163	BSC		[o]	**PF0318**	136,9×67,8×20	OK012/ OK026/ OK078	ATE		[-]	**PF0316**	141,3×57,4×16,5	
220 T CDI	03/03 →	110	150	BSC	(211.206)	[o]	**PF0318**	136,9×67,8×20	OK012/ OK026/ OK078	ATE		[-]	**PF0316**	141,3×57,4×16,5	
220 T CDI	04/06 →	125	170	BSC	(211.208)	[o]	**PF0318**	136,9×67,8×20	OK012/ OK026/ OK078	ATE		[-]	**PF0316**	141,3×57,4×16,5	
230 T	05/07 →	150	204	BSC		[o]	**PF0318**	136,9×67,8×20	OK012/ OK026/ OK078	ATE		[-]	**PF0316**	141,3×57,4×16,5	

		KW	CV													
				SiS	i	W.i.	MAGNETI MARELLI	W×H×Th (mm)	Extra kit [Opt]	SiS	i	W.i.	MAGNETI MARELLI	W×H×Th (mm)	Extra kit [Opt]
MERCEDES-BENZ															
E T-Model SW (S211)															
240 T	03/03 →	130	177	BSC	(211.261)	[o]	**PF0318**	136,9×67,8×20	OK012/ OK026/ OK078	ATE		[-]	**PF0316**	141,3×57,4×16,5	
240 T 4-matic	07/03 →	130	177	BSC	(211.280)	[o]	**PF0318**	136,9×67,8×20	OK012/ OK026/ OK078	ATE		[-]	**PF0316**	141,3×57,4×16,5	
270 T CDI	03/03 →	130	177	BSC	(211.216)	[o]	**PF0318**	136,9×67,8×20	OK012/ OK026/ OK078	ATE		[-]	**PF0316**	141,3×57,4×16,5	
280 T	03/05 →	170	231	BSC	(211.254)	[o]	**PF0318**	136,9×67,8×20	OK012/ OK026/ OK078	ATE		[-]	**PF0316**	141,3×57,4×16,5	
280 T 4-matic	03/05 →	170	231	BSC	(211.292)	[o]	**PF0318**	136,9×67,8×20	OK012/ OK026/ OK078	ATE		[-]	**PF0316**	141,3×57,4×16,5	
280 T CDI	03/05 →	140	190	BSC	(211.220)	[o]	**PF0318**	136,9×67,8×20	OK012/ OK026/ OK078	ATE		[-]	**PF0316**	141,3×57,4×16,5	
280 T CDI	05/04 →	130	177	BSC	(211.223)	[o]	**PF0318**	136,9×67,8×20	OK012/ OK026/ OK078	ATE		[-]	**PF0316**	141,3×57,4×16,5	
280 T CDI 4-matic	03/05 →	140	190	BSC		[o]	**PF0318**	136,9×67,8×20	OK012/ OK026/ OK078	ATE		[-]	**PF0316**	141,3×57,4×16,5	
320 T	03/03 →	165	224	BSC	(211.265)	[o]	**PF0318**	136,9×67,8×20	OK012/ OK026/ OK078	ATE		[-]	**PF0316**	141,3×57,4×16,5	
320 T 4-matic	07/03 →	165	224	BSC	(211.282)	[o]	**PF0318**	136,9×67,8×20	OK012/ OK026/ OK078	ATE		[-]	**PF0316**	141,3×57,4×16,5	
320 T CDI	03/05 →	165	224	BSC	(211.222)	[o]	**PF0318**	136,9×67,8×20	OK012/ OK026/ OK078	ATE		[-]	**PF0316**	141,3×57,4×16,5	
320 T CDI	03/03 →	150	204	BSC	(211.226)	[o]	**PF0318**	136,9×67,8×20	OK012/ OK026/ OK078	ATE		[-]	**PF0316**	141,3×57,4×16,5	
320 T CDI 4-matic	03/05 →	165	224	BSC		[o]	**PF0318**	136,9×67,8×20	OK012/ OK026/ OK078	ATE		[-]	**PF0316**	141,3×57,4×16,5	
350 T	03/05 →	200	272	BR	(211.256)	[o]	**PF0585**	119,8×71,6×17,2		ATE		[-]	**PF0316**	141,3×57,4×16,5	
350 T 4-matic	03/05 →	200	272	BR	(211.287)	[o]	**PF0585**	119,8×71,6×17,2		ATE		[-]	**PF0316**	141,3×57,4×16,5	
350 4-matic	08/04 → 08/06	205	279	BSC		[o]	**PF0318**	136,9×67,8×20	OK012/ OK026/ OK078	ATE		[-]	**PF0316**	141,3×57,4×16,5	

		KW	CV												
				SiS	i	W.i.	MAGNETI MARELLI	W×H×Th (mm)	Extra kit [Opt]	SiS	i	W.i.	MAGNETI MARELLI	W×H×Th (mm)	Extra kit [Opt]
MERCEDES-BENZ															
E T-Model SW (S211)															
350 CGI	05/06 →	215	292	BSC		[o]	**PF0318**	136,9×67,8×20	OK012/ OK026/ OK078	ATE		[-]	**PF0316**	141,3×57,4×16,5	
500 T	10/03 →	225	306	BR	(211.270)	[o]	**PF0585**	119,8×71,6×17,2		ATE		[-]	**PF0316**	141,3×57,4×16,5	
500 T	04/06 →	285	388	BR	(211.272)	[o]	**PF0585**	119,8×71,6×17,2		ATE		[-]	**PF0316**	141,3×57,4×16,5	
500 T 4-matic	10/03 →	225	306	BR	(211.283)	[o]	**PF0585**	119,8×71,6×17,2		ATE		[-]	**PF0316**	141,3×57,4×16,5	
500 T 4-matic	04/06 →	285	388	BR	(211.290)	[o]	**PF0585**	119,8×71,6×17,2		ATE		[-]	**PF0316**	141,3×57,4×16,5	
55 T AMG Kompressor	07/03 →	350	476	BR	(211.276)	[o]	**PF0585**	119,8×71,6×17,2		ATE		[-]	**PF0316**	141,3×57,4×16,5	
E (W212)															
E 200 CDI	01/09 →	100	136	LG		[o]	**PF0313**	146,2×71,5×20,6	OK039/ OK044	ATE		[-]	**PF0316**	141,3×57,4×16,5	
E 200 CDI	01/09 →	100	136	LG	+Sport pack	[-]	**PF0653**	188,1×73,7×19		ATE		[-]	**PF0316**	141,3×57,4×16,5	
E 200 CDI	01/09 →	100	136	LG	+Sport pack	[+]	**PF0654**	188,1×73,7×19		ATE		[-]	**PF0316**	141,3×57,4×16,5	
E 200 CGI	01/09 →	135	184	LG		[o]	**PF0313**	146,2×71,5×20,6	OK039/ OK044	ATE		[-]	**PF0316**	141,3×57,4×16,5	
E 200 CGI	01/09 →	135	184	LG	+Sport pack	[-]	**PF0653**	188,1×73,7×19		ATE		[-]	**PF0316**	141,3×57,4×16,5	
E 200 CGI	01/09 →	135	184	LG	+Sport pack	[+]	**PF0654**	188,1×73,7×19		ATE		[-]	**PF0316**	141,3×57,4×16,5	
E 200 NGT	01/09 →	120	163	LG		[o]	**PF0313**	146,2×71,5×20,6	OK039/ OK044	ATE		[-]	**PF0316**	141,3×57,4×16,5	
E 200 NGT	01/09 →	120	163	LG	+Sport pack	[-]	**PF0653**	188,1×73,7×19		ATE		[-]	**PF0316**	141,3×57,4×16,5	
E 200 NGT	01/09 →	120	163	LG	+Sport pack	[+]	**PF0654**	188,1×73,7×19		ATE		[-]	**PF0316**	141,3×57,4×16,5	
E 220 CDI	01/09 →	125	170	LG		[o]	**PF0313**	146,2×71,5×20,6	OK039/ OK044	ATE		[-]	**PF0316**	141,3×57,4×16,5	
E 220 CDI	01/09 →	125	170	LG	+Sport pack	[-]	**PF0653**	188,1×73,7×19		ATE		[-]	**PF0316**	141,3×57,4×16,5	
E 220 CDI	01/09 →	125	170	LG	+Sport pack	[+]	**PF0654**	188,1×73,7×19		ATE		[-]	**PF0316**	141,3×57,4×16,5	
E 250 CDI	01/09 →	150	204	LG		[o]	**PF0313**	146,2×71,5×20,6	OK039/ OK044	ATE		[-]	**PF0316**	141,3×57,4×16,5	
E 250 CDI	01/09 →	150	204	LG	+Sport pack	[-]	**PF0653**	188,1×73,7×19		ATE		[-]	**PF0316**	141,3×57,4×16,5	
E 250 CDI	01/09 →	150	204	LG	+Sport pack	[+]	**PF0654**	188,1×73,7×19		ATE		[-]	**PF0316**	141,3×57,4×16,5	
E 250 CDI 4-matic	01/09 →	150	204	LG		[o]	**PF0313**	146,2×71,5×20,6	OK039/ OK044	ATE		[-]	**PF0316**	141,3×57,4×16,5	
E 250 CDI 4-matic	01/09 →	150	204	LG	+Sport pack	[-]	**PF0653**	188,1×73,7×19		ATE		[-]	**PF0316**	141,3×57,4×16,5	
E 250 CDI 4-matic	01/09 →	150	204	LG	+Sport pack	[+]	**PF0654**	188,1×73,7×19		ATE		[-]	**PF0316**	141,3×57,4×16,5	
E 250 CGI	01/09 →	150	204	LG		[o]	**PF0313**	146,2×71,5×20,6	OK039/ OK044	ATE		[-]	**PF0316**	141,3×57,4×16,5	
E 250 CGI	01/09 →	150	204	LG	+Sport pack	[-]	**PF0653**	188,1×73,7×19		ATE		[-]	**PF0316**	141,3×57,4×16,5	
E 250 CGI	01/09 →	150	204	LG	+Sport pack	[+]	**PF0654**	188,1×73,7×19		ATE		[-]	**PF0316**	141,3×57,4×16,5	
E 300	01/09 →	170	231	LG		[o]	**PF0313**	146,2×71,5×20,6	OK039/ OK044	ATE		[-]	**PF0316**	141,3×57,4×16,5	
E 300	01/09 →	170	231	LG	+Sport pack	[-]	**PF0653**	188,1×73,7×19		ATE		[-]	**PF0316**	141,3×57,4×16,5	
E 300	01/09 →	170	231	LG	+Sport pack	[+]	**PF0654**	188,1×73,7×19		ATE		[-]	**PF0316**	141,3×57,4×16,5	

		KW	CV													
				SiS	i	W.i.	MAGNETI MARELLI	W×H×Th (mm)	Extra kit [Opt]	SiS	i	W.i.	MAGNETI MARELLI	W×H×Th (mm)	Extra kit [Opt]	
MERCEDES-BENZ																
E (W212)																
E 300 CDI	01/09→	170	231	LG		[o]	**PF0313**	146,2×71,5×20,6	OK039/ OK044	ATE		[-]	**PF0316**	141,3×57,4×16,5		
E 300 CDI	01/09→	170	231	LG	+Sport pack	[-]	**PF0653**	188,1×73,7×19		ATE		[-]	**PF0316**	141,3×57,4×16,5		
E 300 CDI	01/09→	170	231	LG	+Sport pack	[+]	**PF0654**	188,1×73,7×19		ATE		[-]	**PF0316**	141,3×57,4×16,5		
E 350 4-matic	01/09→	200	272	LG		[o]	**PF0313**	146,2×71,5×20,6	OK039/ OK044	ATE		[-]	**PF0316**	141,3×57,4×16,5		
E 350 4-matic	01/09→	200	272	LG	+Sport pack	[-]	**PF0653**	188,1×73,7×19		ATE		[-]	**PF0316**	141,3×57,4×16,5		
E 350 4-matic	01/09→	200	272	LG	+Sport pack	[+]	**PF0654**	188,1×73,7×19		ATE		[-]	**PF0316**	141,3×57,4×16,5		
E 350 BlueTEC	01/09→	155	211	LG		[o]	**PF0313**	146,2×71,5×20,6	OK039/ OK044	ATE		[-]	**PF0316**	141,3×57,4×16,5		
E 350 BlueTEC	01/09→	155	211	LG	+Sport pack	[-]	**PF0653**	188,1×73,7×19		ATE		[-]	**PF0316**	141,3×57,4×16,5		
E 350 BlueTEC	01/09→	155	211	LG	+Sport pack	[+]	**PF0654**	188,1×73,7×19		ATE		[-]	**PF0316**	141,3×57,4×16,5		
E 350 CDI	01/09→	195	265	LG		[o]	**PF0313**	146,2×71,5×20,6	OK039/ OK044	ATE		[-]	**PF0316**	141,3×57,4×16,5		
E 350 CDI	01/09→	195	265	LG	+Sport pack	[-]	**PF0653**	188,1×73,7×19		ATE		[-]	**PF0316**	141,3×57,4×16,5		
E 350 CDI	01/09→	195	265	LG	+Sport pack	[+]	**PF0654**	188,1×73,7×19		ATE		[-]	**PF0316**	141,3×57,4×16,5		
E 350 CDI	01/09→	170	231	LG		[o]	**PF0313**	146,2×71,5×20,6	OK039/ OK044	ATE		[-]	**PF0316**	141,3×57,4×16,5		
E 350 CDI	01/09→	170	231	LG	+Sport pack	[-]	**PF0653**	188,1×73,7×19		ATE		[-]	**PF0316**	141,3×57,4×16,5		
E 350 CDI	01/09→	170	231	LG	+Sport pack	[+]	**PF0654**	188,1×73,7×19		ATE		[-]	**PF0316**	141,3×57,4×16,5		
E 350 CDI 4-matic	01/09→	170	231	LG		[o]	**PF0313**	146,2×71,5×20,6	OK039/ OK044	ATE		[-]	**PF0316**	141,3×57,4×16,5		
E 350 CDI 4-matic	01/09→	170	231	LG	+Sport pack	[-]	**PF0653**	188,1×73,7×19		ATE		[-]	**PF0316**	141,3×57,4×16,5		
E 350 CDI 4-matic	01/09→	170	231	LG	+Sport pack	[+]	**PF0654**	188,1×73,7×19		ATE		[-]	**PF0316**	141,3×57,4×16,5		
E 350 CDI 4-matic	01/09→	195	265	LG		[o]	**PF0313**	146,2×71,5×20,6	OK039/ OK044	ATE		[-]	**PF0316**	141,3×57,4×16,5		
E 350 CDI 4-matic	01/09→	195	265	LG	+Sport pack	[-]	**PF0653**	188,1×73,7×19		ATE		[-]	**PF0316**	141,3×57,4×16,5		
E 350 CDI 4-matic	01/09→	195	265	LG	+Sport pack	[+]	**PF0654**	188,1×73,7×19		ATE		[-]	**PF0316**	141,3×57,4×16,5		
E 350 CGI	01/09→	215	292	LG		[o]	**PF0313**	146,2×71,5×20,6	OK039/ OK044	ATE		[-]	**PF0316**	141,3×57,4×16,5		
E 350 CGI	01/09→	215	292	LG	+Sport pack	[-]	**PF0653**	188,1×73,7×19		ATE		[-]	**PF0316**	141,3×57,4×16,5		
E 350 CGI	01/09→	215	292	LG	+Sport pack	[+]	**PF0654**	188,1×73,7×19		ATE		[-]	**PF0316**	141,3×57,4×16,5		
E 350	01/09→	225	306							ATE		[-]	**PF0316**	141,3×57,4×16,5		
E 350 4-matic	01/09→	225	306							ATE		[-]	**PF0316**	141,3×57,4×16,5		
E 500	01/09→	300	408	LG		[o]	**PF0313**	146,2×71,5×20,6	OK039/ OK044	ATE		[-]	**PF0316**	141,3×57,4×16,5		
E 500	01/09→	300	408	LG	+Sport pack	[-]	**PF0653**	188,1×73,7×19		ATE		[-]	**PF0316**	141,3×57,4×16,5		
E 500	01/09→	300	408	LG	+Sport pack	[+]	**PF0654**	188,1×73,7×19		ATE		[-]	**PF0316**	141,3×57,4×16,5		
E 500	01/09→	285	388	LG		[o]	**PF0313**	146,2×71,5×20,6	OK039/ OK044	ATE		[-]	**PF0316**	141,3×57,4×16,5		

		KW	CV													
				SiS	i	W.i.	MAGNETI MARELLI	W×H×Th (mm)	Extra kit [Opt]	SiS	i	W.i.	MAGNETI MARELLI	W×H×Th (mm)	Extra kit [Opt]
MERCEDES-BENZ																
E (W212)																
E 500	01/09 →	285	388	LG	+Sport pack	[-]	**PF0653**	188,1×73,7×19		ATE		[-]	**PF0316**	141,3×57,4×16,5	
E 500	01/09 →	285	388	LG	+Sport pack	[+]	**PF0654**	188,1×73,7×19		ATE		[-]	**PF0316**	141,3×57,4×16,5	
E 500 4-matic	01/09 →	300	408							ATE		[-]	**PF0316**	141,3×57,4×16,5	
E 500 4-matic	01/09 →	285	388							ATE		[-]	**PF0316**	141,3×57,4×16,5	
E 63 AMG	01/09 →	386	525							ATE		[-]	**PF0316**	141,3×57,4×16,5	
E 63 AMG	01/09 →	386	525							ATE		[-]	**PF0316**	141,3×57,4×16,5	
E T-Model (S212)																
E 200 CDI	08/09 →	100	136	LG	(212.205)	[o]	**PF0313**	146,2×71,5×20,6	OK039/ OK044	ATE		[-]	**PF0314**	122,5×52,1×17,9	
E 200 CDI	08/09 →	100	136	LG	(212.205) +Sport pack	[-]	**PF0653**	188,1×73,7×19		ATE		[-]	**PF0314**	122,5×52,1×17,9	
E 200 CDI	08/09 →	100	136	LG	(212.205) +Sport pack	[+]	**PF0654**	188,1×73,7×19		ATE		[-]	**PF0314**	122,5×52,1×17,9	
E 200 CGI	08/09 →	135	184	LG	(212.248)	[o]	**PF0313**	146,2×71,5×20,6	OK039/ OK044	ATE		[-]	**PF0314**	122,5×52,1×17,9	
E 200 CGI	08/09 →	135	184	LG	(212.248) +Sport pack	[-]	**PF0653**	188,1×73,7×19		ATE		[-]	**PF0314**	122,5×52,1×17,9	
E 200 CGI	08/09 →	135	184	LG	(212.248) +Sport pack	[+]	**PF0654**	188,1×73,7×19		ATE		[-]	**PF0314**	122,5×52,1×17,9	
E 220 CDI	08/09 →	125	170	LG	(212.202)	[o]	**PF0313**	146,2×71,5×20,6	OK039/ OK044	ATE		[-]	**PF0314**	122,5×52,1×17,9	
E 220 CDI	08/09 →	125	170	LG	(212.202) +Sport pack	[-]	**PF0653**	188,1×73,7×19		ATE		[-]	**PF0314**	122,5×52,1×17,9	
E 220 CDI	08/09 →	125	170	LG	(212.202) +Sport pack	[+]	**PF0654**	188,1×73,7×19		ATE		[-]	**PF0314**	122,5×52,1×17,9	
E 250 CDI	08/09 →	150	204	LG	(212.203)	[o]	**PF0313**	146,2×71,5×20,6	OK039/ OK044	ATE		[-]	**PF0314**	122,5×52,1×17,9	
E 250 CDI	08/09 →	150	204	LG	(212.203) +Sport pack	[-]	**PF0653**	188,1×73,7×19		ATE		[-]	**PF0314**	122,5×52,1×17,9	
E 250 CDI	08/09 →	150	204	LG	(212.203) +Sport pack	[+]	**PF0654**	188,1×73,7×19		ATE		[-]	**PF0314**	122,5×52,1×17,9	
E 250 CGI	08/09 →	150	204	LG	(212.247)	[o]	**PF0313**	146,2×71,5×20,6	OK039/ OK044	ATE		[-]	**PF0314**	122,5×52,1×17,9	
E 250 CGI	08/09 →	150	204	LG	(212.247) +Sport pack	[-]	**PF0653**	188,1×73,7×19		ATE		[-]	**PF0314**	122,5×52,1×17,9	
E 250 CGI	08/09 →	150	204	LG	(212.247) +Sport pack	[+]	**PF0654**	188,1×73,7×19		ATE		[-]	**PF0314**	122,5×52,1×17,9	
E 350	08/09 →	200	272	LG	(212.256)	[o]	**PF0313**	146,2×71,5×20,6	OK039/ OK044	ATE		[-]	**PF0314**	122,5×52,1×17,9	
E 350	08/09 →	200	272	LG	(212.256) +Sport pack	[-]	**PF0653**	188,1×73,7×19		ATE		[-]	**PF0314**	122,5×52,1×17,9	
E 350	08/09 →	200	272	LG	(212.256) +Sport pack	[+]	**PF0654**	188,1×73,7×19		ATE		[-]	**PF0314**	122,5×52,1×17,9	

MERCEDES-BENZ

E T-Model (S212)

		KW	CV	SiS	i	W.i.	MAGNETI MARELLI	W×H×Th (mm)	Extra kit [Opt]	SiS	i	W.i.	MAGNETI MARELLI	W×H×Th (mm)	Extra kit [Opt]
E 350 4-matic	08/09→	200	272	LG	(212.287)	[o]	**PF0313**	146,2×71,5×20,6	OK039/ OK044	ATE		[-]	**PF0314**	122,5×52,1×17,9	
E 350 4-matic	08/09→	200	272	LG	(212.287) +Sport pack	[-]	**PF0653**	188,1×73,7×19		ATE		[-]	**PF0314**	122,5×52,1×17,9	
E 350 4-matic	08/09→	200	272	LG	(212.287) +Sport pack	[+]	**PF0654**	188,1×73,7×19		ATE		[-]	**PF0314**	122,5×52,1×17,9	
E 350 BlueTEC	08/09→	155	211	LG	(212.224)	[o]	**PF0313**	146,2×71,5×20,6	OK039/ OK044	ATE		[-]	**PF0314**	122,5×52,1×17,9	
E 350 BlueTEC	08/09→	155	211	LG	(212.224) +Sport pack	[-]	**PF0653**	188,1×73,7×19		ATE		[-]	**PF0314**	122,5×52,1×17,9	
E 350 BlueTEC	08/09→	155	211	LG	(212.224) +Sport pack	[+]	**PF0654**	188,1×73,7×19		ATE		[-]	**PF0314**	122,5×52,1×17,9	
E 350 CDI	08/09→	195	265	LG	(212.223)	[o]	**PF0313**	146,2×71,5×20,6	OK039/ OK044	ATE		[-]	**PF0314**	122,5×52,1×17,9	
E 350 CDI	08/09→	195	265	LG	(212.223) +Sport pack	[-]	**PF0653**	188,1×73,7×19		ATE		[-]	**PF0314**	122,5×52,1×17,9	
E 350 CDI	08/09→	195	265	LG	(212.223) +Sport pack	[+]	**PF0654**	188,1×73,7×19		ATE		[-]	**PF0314**	122,5×52,1×17,9	
E 350 CDI	08/09→	170	231	LG	(212.225)	[o]	**PF0313**	146,2×71,5×20,6	OK039/ OK044	ATE		[-]	**PF0314**	122,5×52,1×17,9	
E 350 CDI	08/09→	170	231	LG	(212.225) +Sport pack	[-]	**PF0653**	188,1×73,7×19		ATE		[-]	**PF0314**	122,5×52,1×17,9	
E 350 CDI	08/09→	170	231	LG	(212.225) +Sport pack	[+]	**PF0654**	188,1×73,7×19		ATE		[-]	**PF0314**	122,5×52,1×17,9	
E 350 CDI 4-matic	08/09→	170	231	LG	(212.289)	[o]	**PF0313**	146,2×71,5×20,6	OK039/ OK044	ATE		[-]	**PF0314**	122,5×52,1×17,9	
E 350 CDI 4-matic	08/09→	170	231	LG	(212.289) +Sport pack	[-]	**PF0653**	188,1×73,7×19		ATE		[-]	**PF0314**	122,5×52,1×17,9	
E 350 CDI 4-matic	08/09→	170	231	LG	(212.289) +Sport pack	[+]	**PF0654**	188,1×73,7×19		ATE		[-]	**PF0314**	122,5×52,1×17,9	
E 350 CDI All-wheel Drive 4-matic	08/09→	195	265	LG	(212.293)	[o]	**PF0313**	146,2×71,5×20,6	OK039/ OK044	ATE		[-]	**PF0314**	122,5×52,1×17,9	
E 350 CDI All-wheel Drive 4-matic	08/09→	195	265	LG	(212.293) +Sport pack	[-]	**PF0653**	188,1×73,7×19		ATE		[-]	**PF0314**	122,5×52,1×17,9	
E 350 CDI All-wheel Drive 4-matic	08/09→	195	265	LG	(212.293) +Sport pack	[+]	**PF0654**	188,1×73,7×19		ATE		[-]	**PF0314**	122,5×52,1×17,9	
E 350 CGI	08/09→	215	292	LG	(212.257)	[o]	**PF0313**	146,2×71,5×20,6	OK039/ OK044	ATE		[-]	**PF0314**	122,5×52,1×17,9	
E 350 CGI	08/09→	215	292	LG	(212.257) +Sport pack	[-]	**PF0653**	188,1×73,7×19		ATE		[-]	**PF0314**	122,5×52,1×17,9	

		KW	CV	SiS	i	W.i.	MAGNETI MARELLI	W×H×Th (mm)	Extra kit [Opt]	SiS	i	W.i.	MAGNETI MARELLI	W×H×Th (mm)	Extra kit [Opt]
MERCEDES-BENZ															
E T-Model (S212)															
E 350 CGI	08/09→	215	292	LG	(212.257) +Sport pack	[+]	**PF0654**	188,1×73,7×19		ATE		[-]	**PF0314**	122,5×52,1×17,9	
E 500	08/09→	300	408	LG		[o]	**PF0313**	146,2×71,5×20,6	OK039/ OK044	ATE		[-]	**PF0314**	122,5×52,1×17,9	
E 500	08/09→	300	408	LG	+Sport pack	[-]	**PF0653**	188,1×73,7×19		ATE		[-]	**PF0314**	122,5×52,1×17,9	
E 500	08/09→	300	408	LG	+Sport pack	[+]	**PF0654**	188,1×73,7×19		ATE		[-]	**PF0314**	122,5×52,1×17,9	
E 500	08/09→	285	388	LG	(212.272)	[o]	**PF0313**	146,2×71,5×20,6	OK039/ OK044	ATE		[-]	**PF0314**	122,5×52,1×17,9	
E 500	08/09→	285	388	LG	(212.272) +Sport pack	[-]	**PF0653**	188,1×73,7×19		ATE		[-]	**PF0314**	122,5×52,1×17,9	
E 500	08/09→	285	388	LG	(212.272) +Sport pack	[+]	**PF0654**	188,1×73,7×19		ATE		[-]	**PF0314**	122,5×52,1×17,9	
E 500 4-matic	08/09→	300	408	LG		[o]	**PF0313**	146,2×71,5×20,6	OK039/ OK044	ATE		[-]	**PF0314**	122,5×52,1×17,9	
E 500 4-matic	08/09→	300	408	LG	+Sport pack	[-]	**PF0653**	188,1×73,7×19		ATE		[-]	**PF0314**	122,5×52,1×17,9	
E 500 4-matic	08/09→	300	408	LG	+Sport pack	[+]	**PF0654**	188,1×73,7×19		ATE		[-]	**PF0314**	122,5×52,1×17,9	
E 63 AMG	08/09→	386	525	LG	(212.274)	[o]	**PF0313**	146,2×71,5×20,6	OK039/ OK044	ATE		[-]	**PF0314**	122,5×52,1×17,9	
E 63 AMG	08/09→	386	525	LG	(212.274) +Sport pack	[-]	**PF0653**	188,1×73,7×19		ATE		[-]	**PF0314**	122,5×52,1×17,9	
E 63 AMG	08/09→	386	525	LG	(212.274) +Sport pack	[+]	**PF0654**	188,1×73,7×19		ATE		[-]	**PF0314**	122,5×52,1×17,9	
E 63 AMG	08/09→	386	525	LG	(212.277)	[o]	**PF0313**	146,2×71,5×20,6	OK039/ OK044	ATE		[-]	**PF0314**	122,5×52,1×17,9	
E 63 AMG	08/09→	386	525	LG	(212.277) +Sport pack	[-]	**PF0653**	188,1×73,7×19		ATE		[-]	**PF0314**	122,5×52,1×17,9	
E 63 AMG	08/09→	386	525	LG	(212.277) +Sport pack	[+]	**PF0654**	188,1×73,7×19		ATE		[-]	**PF0314**	122,5×52,1×17,9	
E350	08/09→	225	306	LG		[o]	**PF0313**	146,2×71,5×20,6	OK039/ OK044	ATE		[-]	**PF0314**	122,5×52,1×17,9	
E350	08/09→	225	306	LG	+Sport pack	[-]	**PF0653**	188,1×73,7×19		ATE		[-]	**PF0314**	122,5×52,1×17,9	
E350	08/09→	225	306	LG	+Sport pack	[+]	**PF0654**	188,1×73,7×19		ATE		[-]	**PF0314**	122,5×52,1×17,9	
E350 4-matic	08/09→	225	306	LG		[o]	**PF0313**	146,2×71,5×20,6	OK039/ OK044	ATE		[-]	**PF0314**	122,5×52,1×17,9	
E350 4-matic	08/09→	225	306	LG	+Sport pack	[-]	**PF0653**	188,1×73,7×19		ATE		[-]	**PF0314**	122,5×52,1×17,9	
E350 4-matic	08/09→	225	306	LG	+Sport pack	[+]	**PF0654**	188,1×73,7×19		ATE		[-]	**PF0314**	122,5×52,1×17,9	
E Cabriolet (A207)															
E 200 CGI	01/10→	135	184	LG	(207.448)	[o]	**PF0313**	146,2×71,5×20,6	OK039/ OK044	ATE		[-]	**PF0314**	122,5×52,1×17,9	
E 200 CGI	01/10→	135	184	LG	(207.448) +Sport pack	[-]	**PF0653**	188,1×73,7×19		ATE		[-]	**PF0314**	122,5×52,1×17,9	
E 200 CGI	01/10→	135	184	LG	(207.448) +Sport pack	[+]	**PF0654**	188,1×73,7×19		ATE		[-]	**PF0314**	122,5×52,1×17,9	

		KW	CV	SiS	i	W.i.	MAGNETI MARELLI	W×H×Th (mm)	Extra kit [Opt]	SiS	i	W.i.	MAGNETI MARELLI	W×H×Th (mm)	Extra kit [Opt]
MERCEDES-BENZ															
E Cabriolet (A207)															
E 220 CDI	01/10→	125	170	LG	(207.402)	[o]	**PF0313**	146,2×71,5×20,6	OK039/ OK044	ATE		[-]	**PF0314**	122,5×52,1×17,9	
E 220 CDI	01/10→	125	170	LG	(207.402) +Sport pack	[-]	**PF0653**	188,1×73,7×19		ATE		[-]	**PF0314**	122,5×52,1×17,9	
E 220 CDI	01/10→	125	170	LG	(207.402) +Sport pack	[+]	**PF0654**	188,1×73,7×19		ATE		[-]	**PF0314**	122,5×52,1×17,9	
E 250 CDI	01/10→	150	204	LG	(207.403)	[o]	**PF0313**	146,2×71,5×20,6	OK039/ OK044	ATE		[-]	**PF0314**	122,5×52,1×17,9	
E 250 CDI	01/10→	150	204	LG	(207.403) +Sport pack	[-]	**PF0653**	188,1×73,7×19		ATE		[-]	**PF0314**	122,5×52,1×17,9	
E 250 CDI	01/10→	150	204	LG	(207.403) +Sport pack	[+]	**PF0654**	188,1×73,7×19		ATE		[-]	**PF0314**	122,5×52,1×17,9	
E 250 CGI	01/10→	150	204	LG	(207.447)	[o]	**PF0313**	146,2×71,5×20,6	OK039/ OK044	ATE		[-]	**PF0314**	122,5×52,1×17,9	
E 250 CGI	01/10→	150	204	LG	(207.447) +Sport pack	[-]	**PF0653**	188,1×73,7×19		ATE		[-]	**PF0314**	122,5×52,1×17,9	
E 250 CGI	01/10→	150	204	LG	(207.447) +Sport pack	[+]	**PF0654**	188,1×73,7×19		ATE		[-]	**PF0314**	122,5×52,1×17,9	
E 300	01/10→	185	252	LG		[o]	**PF0313**	146,2×71,5×20,6	OK039/ OK044	ATE		[-]	**PF0314**	122,5×52,1×17,9	
E 300	01/10→	185	252	LG	+Sport pack	[-]	**PF0653**	188,1×73,7×19		ATE		[-]	**PF0314**	122,5×52,1×17,9	
E 300	01/10→	185	252	LG	+Sport pack	[+]	**PF0654**	188,1×73,7×19		ATE		[-]	**PF0314**	122,5×52,1×17,9	
E 350	01/10→	225	306	LG		[o]	**PF0313**	146,2×71,5×20,6	OK039/ OK044	ATE		[-]	**PF0314**	122,5×52,1×17,9	
E 350	01/10→	225	306	LG	+Sport pack	[-]	**PF0653**	188,1×73,7×19		ATE		[-]	**PF0314**	122,5×52,1×17,9	
E 350	01/10→	225	306	LG	+Sport pack	[+]	**PF0654**	188,1×73,7×19		ATE		[-]	**PF0314**	122,5×52,1×17,9	
E 350 CDI	01/10→	195	265	LG		[o]	**PF0313**	146,2×71,5×20,6	OK039/ OK044	ATE		[-]	**PF0314**	122,5×52,1×17,9	
E 350 CDI	01/10→	195	265	LG	+Sport pack	[-]	**PF0653**	188,1×73,7×19		ATE		[-]	**PF0314**	122,5×52,1×17,9	
E 350 CDI	01/10→	195	265	LG	+Sport pack	[+]	**PF0654**	188,1×73,7×19	OK044	ATE		[-]	**PF0314**	122,5×52,1×17,9	
E 350 CDI	01/10→	170	231	LG	(207.422)	[o]	**PF0313**	146,2×71,5×20,6	OK039/ OK044	ATE		[-]	**PF0314**	122,5×52,1×17,9	
E 350 CDI	01/10→	170	231	LG	(207.422) +Sport pack	[-]	**PF0653**	188,1×73,7×19		ATE		[-]	**PF0314**	122,5×52,1×17,9	
E 350 CDI	01/10→	170	231	LG	(207.422) +Sport pack	[+]	**PF0654**	188,1×73,7×19		ATE		[-]	**PF0314**	122,5×52,1×17,9	
E 350 CGI	01/10→	215	292	LG	(207.457)	[o]	**PF0313**	146,2×71,5×20,6	OK039/ OK044	ATE		[-]	**PF0314**	122,5×52,1×17,9	
E 350 CGI	01/10→	215	292	LG	(207.457) +Sport pack	[-]	**PF0653**	188,1×73,7×19		ATE		[-]	**PF0314**	122,5×52,1×17,9	
E 350 CGI	01/10→	215	292	LG	(207.457) +Sport pack	[+]	**PF0654**	188,1×73,7×19		ATE		[-]	**PF0314**	122,5×52,1×17,9	
E 500	01/10→	300	408	LG		[o]	**PF0313**	146,2×71,5×20,6	OK039/ OK044	ATE		[-]	**PF0314**	122,5×52,1×17,9	

		KW	CV	SiS	i	W.i.	MAGNETI MARELLI	W×H×Th (mm)	Extra kit [Opt]	SiS	i	W.i.	MAGNETI MARELLI	W×H×Th (mm)	Extra kit [Opt]
MERCEDES-BENZ															
E Cabriolet (A207)															
E 500	01/10→	300	408	LG	+Sport pack	[-]	**PF0653**	188,1×73,7×19		ATE		[-]	**PF0314**	122,5×52,1×17,9	
E 500	01/10→	300	408	LG	+Sport pack	[+]	**PF0654**	188,1×73,7×19		ATE		[-]	**PF0314**	122,5×52,1×17,9	
E 500	01/10→	285	388	LG	(207.472)	[o]	**PF0313**	146,2×71,5×20,6	OK039/ OK044	ATE		[-]	**PF0314**	122,5×52,1×17,9	
E 500	01/10→	285	388	LG	(207.472) +Sport pack	[-]	**PF0653**	188,1×73,7×19		ATE		[-]	**PF0314**	122,5×52,1×17,9	
E 500	01/10→	285	388	LG	(207.472) +Sport pack	[+]	**PF0654**	188,1×73,7×19		ATE		[-]	**PF0314**	122,5×52,1×17,9	
E Coupé (W124)															
200	87→97									ATE		[-]	**PF0304**	61,7×54,2×13,5	
220	92→97									ATE		[-]	**PF0304**	61,7×54,2×13,5	
230	87→97									ATE		[-]	**PF0304**	61,7×54,2×13,5	
300 CE	87→97									ATE		[-]	**PF0304**	61,7×54,2×13,5	
300i 24V CE	89→97									ATE		[o]	**PF0307**	61,7×58,5×15,2	
320i 24V CE	92→97									ATE		[o]	**PF0307**	61,7×58,5×15,2	
E Coupé (C207)															
E 200 CGI	01/09→	135	184	LG	(207.348)	[o]	**PF0313**	146,2×71,5×20,6	OK039/ OK044	ATE		[-]	**PF0314**	122,5×52,1×17,9	
E 200 CGI	01/09→	135	184	LG	(207.348) +Sport pack	[-]	**PF0653**	188,1×73,7×19		ATE		[-]	**PF0314**	122,5×52,1×17,9	
E 200 CGI	01/09→	135	184	LG	(207.348) +Sport pack	[+]	**PF0654**	188,1×73,7×19		ATE		[-]	**PF0314**	122,5×52,1×17,9	
E 220 CDI	01/09→	125	170	LG	(207.302)	[o]	**PF0313**	146,2×71,5×20,6	OK039/ OK044	ATE		[-]	**PF0314**	122,5×52,1×17,9	
E 220 CDI	01/09→	125	170	LG	(207.302) +Sport pack	[-]	**PF0653**	188,1×73,7×19		ATE		[-]	**PF0314**	122,5×52,1×17,9	
E 220 CDI	01/09→	125	170	LG	(207.302) +Sport pack	[+]	**PF0654**	188,1×73,7×19		ATE		[-]	**PF0314**	122,5×52,1×17,9	
E 250 CDI	01/09→	150	204	LG	(207.303)	[o]	**PF0313**	146,2×71,5×20,6	OK039/ OK044	ATE		[-]	**PF0314**	122,5×52,1×17,9	
E 250 CDI	01/09→	150	204	LG	(207.303) +Sport pack	[-]	**PF0653**	188,1×73,7×19		ATE		[-]	**PF0314**	122,5×52,1×17,9	
E 250 CDI	01/09→	150	204	LG	(207.303) +Sport pack	[+]	**PF0654**	188,1×73,7×19		ATE		[-]	**PF0314**	122,5×52,1×17,9	
E 250 CGI	01/09→	150	204	LG	(207.347)	[o]	**PF0313**	146,2×71,5×20,6	OK039/ OK044	ATE		[-]	**PF0314**	122,5×52,1×17,9	
E 250 CGI	01/09→	150	204	LG	(207.347) +Sport pack	[-]	**PF0653**	188,1×73,7×19		ATE		[-]	**PF0314**	122,5×52,1×17,9	
E 250 CGI	01/09→	150	204	LG	(207.347) +Sport pack	[+]	**PF0654**	188,1×73,7×19		ATE		[-]	**PF0314**	122,5×52,1×17,9	
E 300	01/09→	185	252	LG		[o]	**PF0313**	146,2×71,5×20,6	OK039/ OK044	ATE		[-]	**PF0314**	122,5×52,1×17,9	
E 300	01/09→	185	252	LG	+Sport pack	[-]	**PF0653**	188,1×73,7×19		ATE		[-]	**PF0314**	122,5×52,1×17,9	
E 300	01/09→	185	252	LG	+Sport pack	[+]	**PF0654**	188,1×73,7×19		ATE		[-]	**PF0314**	122,5×52,1×17,9	

		KW	CV													
				SiS	i	W.i.	MAGNETI MARELLI	W×H×Th (mm)	Extra kit [Opt]	SiS	i	W.i.	MAGNETI MARELLI	W×H×Th (mm)	Extra kit [Opt]
MERCEDES-BENZ															
E Coupé (C207)															
E 350	01/09→	225	306	LG		[o]	**PF0313**	146,2×71,5×20,6	OK039/ OK044	ATE		[-]	**PF0314**	122,5×52,1×17,9	
E 350	01/09→	225	306	LG	+Sport pack	[-]	**PF0653**	188,1×73,7×19		ATE		[-]	**PF0314**	122,5×52,1×17,9	
E 350	01/09→	225	306	LG	+Sport pack	[+]	**PF0654**	188,1×73,7×19		ATE		[-]	**PF0314**	122,5×52,1×17,9	
E 350 CDI	01/09→	195	265	LG		[o]	**PF0313**	146,2×71,5×20,6	OK039/ OK044	ATE		[-]	**PF0314**	122,5×52,1×17,9	
E 350 CDI	01/09→	195	265	LG	+Sport pack	[-]	**PF0653**	188,1×73,7×19		ATE		[-]	**PF0314**	122,5×52,1×17,9	
E 350 CDI	01/09→	195	265	LG	+Sport pack	[+]	**PF0654**	188,1×73,7×19		ATE		[-]	**PF0314**	122,5×52,1×17,9	
E 350 CDI	01/09→	170	231	LG	(207.322)	[o]	**PF0313**	146,2×71,5×20,6	OK039/ OK044	ATE		[-]	**PF0314**	122,5×52,1×17,9	
E 350 CDI	01/09→	170	231	LG	(207.322) +Sport pack	[-]	**PF0653**	188,1×73,7×19		ATE		[-]	**PF0314**	122,5×52,1×17,9	
E 350 CDI	01/09→	170	231	LG	(207.322) +Sport pack	[+]	**PF0654**	188,1×73,7×19		ATE		[-]	**PF0314**	122,5×52,1×17,9	
E 350 CGI	01/09→	215	292	LG	(207.357)	[o]	**PF0313**	146,2×71,5×20,6	OK039/ OK044	ATE		[-]	**PF0314**	122,5×52,1×17,9	
E 350 CGI	01/09→	215	292	LG	(207.357) +Sport pack	[-]	**PF0653**	188,1×73,7×19		ATE		[-]	**PF0314**	122,5×52,1×17,9	
E 350 CGI	01/09→	215	292	LG	(207.357) +Sport pack	[+]	**PF0654**	188,1×73,7×19		ATE		[-]	**PF0314**	122,5×52,1×17,9	
E 500	01/09→	300	408	LG		[o]	**PF0313**	146,2×71,5×20,6	OK039/ OK044	ATE		[-]	**PF0314**	122,5×52,1×17,9	
E 500	01/09→	300	408	LG	+Sport pack	[-]	**PF0653**	188,1×73,7×19		ATE		[-]	**PF0314**	122,5×52,1×17,9	
E 500	01/09→	300	408	LG	+Sport pack	[+]	**PF0654**	188,1×73,7×19		ATE		[-]	**PF0314**	122,5×52,1×17,9	
E 500	01/09→	285	388	LG	(207.372)	[o]	**PF0313**	146,2×71,5×20,6	OK039/ OK044	ATE		[-]	**PF0314**	122,5×52,1×17,9	
E 500	01/09→	285	388	LG	(207.372) +Sport pack	[-]	**PF0653**	188,1×73,7×19		ATE		[-]	**PF0314**	122,5×52,1×17,9	
E 500	01/09→	285	388	LG	(207.372) +Sport pack	[+]	**PF0654**	188,1×73,7×19		ATE		[-]	**PF0314**	122,5×52,1×17,9	
E AMG															
50 5.0	95→96									ATE		[o]	**PF0303**	61,7×69,8×15,2	
50 5.0	09/96→97									ATE		[o]	**PF0553**	63,7×78,2×15,8	
55 5.4	→11/97									ATE		[o]	**PF0303**	61,7×69,8×15,2	
55 5.4	12/97→									ATE		[o]	**PF0553**	63,7×78,2×15,8	
G (W460)															
230 G	03/79→07/93	66	90	PT	(460,2)	[-]	**PF0325**	149×69×18	OK068	BSC		[o]	**PF0319**	125,9×61,9×18,8	
230 G	02/80→07/87	75	102	PT	(460,2)	[-]	**PF0325**	149×69×18	OK068	BSC		[o]	**PF0319**	125,9×61,9×18,8	
230 GE	05/87→08/92	90	122	PT	(460,2)	[-]	**PF0325**	149×69×18	OK068	BSC		[o]	**PF0319**	125,9×61,9×18,8	
230 GE	04/82→08/92	92	125	PT	(460,2)	[-]	**PF0325**	149×69×18	OK068	BSC		[o]	**PF0319**	125,9×61,9×18,8	
240 GD	03/79→08/87	53	72	PT	(460,3)	[-]	**PF0325**	149×69×18	OK068	BSC		[o]	**PF0319**	125,9×61,9×18,8	
250 GD	10/87→12/92	62	84	PT	(460,3)	[-]	**PF0325**	149×69×18	OK068	BSC		[o]	**PF0319**	125,9×61,9×18,8	
250 GD	12/88→08/92	68	92	PT	(460,3)	[-]	**PF0325**	149×69×18	OK068	BSC		[o]	**PF0319**	125,9×61,9×18,8	
280 GE	08/84→08/89	110	150	PT	(460,2)	[-]	**PF0325**	149×69×18	OK068	BSC		[o]	**PF0319**	125,9×61,9×18,8	

		KW	CV	SiS	i	W.i.	MAGNETI MARELLI	W×H×Th (mm)	Extra kit [Opt]	SiS	i	W.i.	MAGNETI MARELLI	W×H×Th (mm)	Extra kit [Opt]
MERCEDES-BENZ															
G (W460)															
280 GE	11/79 → 08/89	115	156	PT	(460,2)	[-]	**PF0325**	149×69×18	OK068	BSC		[o]	**PF0319**	125,9×61,9×18,8	
300 GD	12/79 → 12/91	65	88	PT	(460,3)	[-]	**PF0325**	149×69×18	OK068	BSC		[o]	**PF0319**	125,9×61,9×18,8	
300 GD	03/79 → 07/93	83	113	PT	(460.3)	[-]	**PF0325**	149×69×18	OK068	BSC		[o]	**PF0319**	125,9×61,9×18,8	
G (W461)															
230 GE	06/93 →	92	125	PT	(461)	[-]	**PF0325**	149×69×18	OK068	BSC		[o]	**PF0319**	125,9×61,9×18,8	
230 GE	02/93 →	90	122	PT	(461.238, 461.239)	[-]	**PF0325**	149×69×18	OK068	BSC		[o]	**PF0319**	125,9×61,9×18,8	
250 GD	02/90 →	68	92	PT	(461)	[-]	**PF0325**	149×69×18	OK068	BSC		[o]	**PF0319**	125,9×61,9×18,8	
290 GD/G 290 D	04/92 →	70	95	PT	(461.337, 461.338)	[-]	**PF0325**	149×69×18	OK068	BSC		[o]	**PF0319**	125,9×61,9×18,8	
G 280 CDI	04/09 →	135	184	PT		[-]	**PF0325**	149×69×18	OK068	BSC		[o]	**PF0319**	125,9×61,9×18,8	
G 290 TD	07/97 →	88	120	PT	(461.335, 461.336)	[-]	**PF0325**	149×69×18	OK068	BSC		[o]	**PF0319**	125,9×61,9×18,8	
G 300 CDI	04/10 →	135	184	PT		[-]	**PF0325**	149×69×18	OK068	BSC		[o]	**PF0319**	125,9×61,9×18,8	
G (W463)															
230 GE	06/90 → 06/93	93	126	PT		[-]	**PF0325**	149×69×18	OK068	BSC		[o]	**PF0319**	125,9×61,9×18,8	
250 GD	06/90 →	69	94	PT		[-]	**PF0325**	149×69×18	OK068	BSC		[o]	**PF0319**	125,9×61,9×18,8	
270 CDI	10/01 →	115	156	PT		[-]	**PF0325**	149×69×18	OK068	BSC		[o]	**PF0319**	125,9×61,9×18,8	
300 GD	09/89 →	83	113	PT		[-]	**PF0325**	149×69×18	OK068	BSC		[o]	**PF0319**	125,9×61,9×18,8	
300 GE	06/90 →	128	174	PT		[-]	**PF0325**	149×69×18	OK068	BSC		[o]	**PF0319**	125,9×61,9×18,8	
300 GE	06/90 →	125	170	PT		[-]	**PF0325**	149×69×18	OK068	BSC		[o]	**PF0319**	125,9×61,9×18,8	
300 TD	08/96 →	130	177	PT		[-]	**PF0325**	149×69×18	OK068	BSC		[o]	**PF0319**	125,9×61,9×18,8	
320	09/94 → 12/97	155	211	PT		[-]	**PF0325**	149×69×18	OK068	BSC		[o]	**PF0319**	125,9×61,9×18,8	
320	07/97 →	158	215	PT		[-]	**PF0325**	149×69×18	OK068	BSC		[o]	**PF0319**	125,9×61,9×18,8	
320 CDI	09/06 →	165	224	PT		[-]	**PF0325**	149×69×18	OK068	BSC		[o]	**PF0319**	125,9×61,9×18,8	
350 Turbo D	09/91 →	100	136	PT		[-]	**PF0325**	149×69×18	OK068	BSC		[o]	**PF0319**	125,9×61,9×18,8	
400 CDI	12/00 →	184	250	PT		[-]	**PF0325**	149×69×18	OK068	BSC		[o]	**PF0319**	125,9×61,9×18,8	
500	04/98 →	218	296	PT		[-]	**PF0325**	149×69×18	OK068	BSC		[o]	**PF0319**	125,9×61,9×18,8	
500 E	09/93 →	177	241	PT		[-]	**PF0325**	149×69×18	OK068	BSC		[o]	**PF0319**	125,9×61,9×18,8	
36 AMG	01/95 →	200	272	PT		[-]	**PF0325**	149×69×18	OK068	BSC		[o]	**PF0319**	125,9×61,9×18,8	
55 AMG	04/99 →	260	354	PT		[-]	**PF0325**	149×69×18	OK068	BSC		[o]	**PF0319**	125,9×61,9×18,8	
55 AMG	08/08 →	373	507	PT		[-]	**PF0325**	149×69×18	OK068	BSC		[o]	**PF0319**	125,9×61,9×18,8	
55 AMG	06/04 →	350	476	PT		[-]	**PF0325**	149×69×18	OK068	BSC		[o]	**PF0319**	125,9×61,9×18,8	
55 AMG	08/06 →	368	500	PT		[-]	**PF0325**	149×69×18	OK068	BSC		[o]	**PF0319**	125,9×61,9×18,8	
G Cabrio (W463)															
200 GE	01/90 → 07/93	80	109	PT	(463.221)	[-]	**PF0325**	149×69×18	OK068	BSC		[o]	**PF0319**	125,9×61,9×18,8	
230 GE	06/90 → 02/93	93	126	PT	(463.204)	[-]	**PF0325**	149×69×18	OK068	BSC		[o]	**PF0319**	125,9×61,9×18,8	
300 GD	12/90 → 09/97	83	113	PT	(463.307)	[-]	**PF0325**	149×69×18	OK068	BSC		[o]	**PF0319**	125,9×61,9×18,8	
300 GE	09/89 → 09/97	125	170	PT	(463.207)	[-]	**PF0325**	149×69×18	OK068	BSC		[o]	**PF0319**	125,9×61,9×18,8	
300 TD	09/96 →	130	177	PT	(463.308)	[-]	**PF0325**	149×69×18	OK068	BSC		[o]	**PF0319**	125,9×61,9×18,8	
320	11/97 →	158	215	PT	(463.209)	[-]	**PF0325**	149×69×18	OK068	BSC		[o]	**PF0319**	125,9×61,9×18,8	
320 GE	09/94 → 11/97	155	211	PT	(463.208)	[-]	**PF0325**	149×69×18	OK068	BSC		[o]	**PF0319**	125,9×61,9×18,8	
320 CDI	09/06 →	165	224	PT		[-]	**PF0325**	149×69×18	OK068	BSC		[o]	**PF0319**	125,9×61,9×18,8	
320 CDI	08/08 →	165	224	PT		[-]	**PF0325**	149×69×18	OK068	BSC		[o]	**PF0319**	125,9×61,9×18,8	

		KW	CV	SiS	i	W.i.	MAGNETI MARELLI	W×H×Th (mm)	Extra kit [Opt]	SiS	i	W.i.	MAGNETI MARELLI	W×H×Th (mm)	Extra kit [Opt]
MERCEDES-BENZ															
G Cabrio (W463)															
350 G Turbo-D	09/91 → 09/97	100	136	PT	(463.300)	[-]	**PF0325**	149×69×18	OK068	BSC		[o]	**PF0319**	125,9×61,9×18,8	
400 CDI	12/00 →	184	250	PT	(463.309)	[-]	**PF0325**	149×69×18	OK068	BSC		[o]	**PF0319**	125,9×61,9×18,8	
500	12/09 →	285	388	PT		[-]	**PF0325**	149×69×18	OK068	BSC		[o]	**PF0319**	125,9×61,9×18,8	
500	04/98 →	218	296	PT	(463)	[-]	**PF0325**	149×69×18	OK068	BSC		[o]	**PF0319**	125,9×61,9×18,8	
GL (X164)															
320 CDI	09/06 → 05/09	165	224	ATE	(164.822)	[o]	**PF0639**	194,4×70×20,1		ATE		[-]	**PF0640**	140,5×51,7×17,6	
320 CDI	09/06 → 05/09	165	224							ATE		[-]	**PF0640**	140,5×51,7×17,6	
350 CDI	05/09 →	165	224	ATE	(164.822)	[o]	**PF0639**	194,4×70×20,1		ATE		[-]	**PF0640**	140,5×51,7×17,6	
350 CDI	05/09 →	165	224							ATE		[-]	**PF0640**	140,5×51,7×17,6	
350 CDI BlueTEC	12/09 →	155	211	ATE		[o]	**PF0639**	194,4×70×20,1		ATE		[-]	**PF0640**	140,5×51,7×17,6	
350 CDI BlueTEC	12/09 →	155	211							ATE		[-]	**PF0640**	140,5×51,7×17,6	
420 CDI	09/06 → 05/09	225	306	ATE	(164.828)	[o]	**PF0639**	194,4×70×20,1		ATE		[-]	**PF0640**	140,5×51,7×17,6	
420 CDI	09/06 → 05/09	225	306							ATE		[-]	**PF0640**	140,5×51,7×17,6	
450	09/06 →	250	340	ATE	(164.871)	[o]	**PF0639**	194,4×70×20,1		ATE		[-]	**PF0640**	140,5×51,7×17,6	
450	09/06 →	250	340							ATE		[-]	**PF0640**	140,5×51,7×17,6	
450 CDI	05/09 →	225	306	ATE	(164.828)	[o]	**PF0639**	194,4×70×20,1		ATE		[-]	**PF0640**	140,5×51,7×17,6	
450 CDI	05/09 →	225	306							ATE		[-]	**PF0640**	140,5×51,7×17,6	
500	09/06 →	285	388	ATE	(164.886)	[o]	**PF0639**	194,4×70×20,1		ATE		[-]	**PF0640**	140,5×51,7×17,6	
500	09/06 →	285	388							ATE		[-]	**PF0640**	140,5×51,7×17,6	
GLA (X156)															
GLA 200	12/13 →	115	156	LG	(156.943)	[o]	**PF0734**	144,1×71,7×19,3	OK030	LG		[o]	**PF0736**	106,4×59,1×18,4	OK039
GLA 200 CDI	12/13 →	100	136	LG	(156.908)	[o]	**PF0734**	144,1×71,7×19,3	OK030	LG		[o]	**PF0736**	106,4×59,1×18,4	OK039
GLA 200 CDI 4x4	12/13 →	100	136	LG	(156.902)	[o]	**PF0734**	144,1×71,7×19,3	OK030	LG		[o]	**PF0736**	106,4×59,1×18,4	OK039
GLA 220 CDI	12/13 →	125	170	LG	(156.903)	[o]	**PF0734**	144,1×71,7×19,3	OK030	LG		[o]	**PF0736**	106,4×59,1×18,4	OK039
GLA 220 CDI	12/13 →	120	163	LG		[o]	**PF0734**	144,1×71,7×19,3	OK030	LG		[o]	**PF0736**	106,4×59,1×18,4	OK039
GLA 220 CDI 4x4	12/13 →	125	170	LG	(156.905)	[o]	**PF0734**	144,1×71,7×19,3	OK030	LG		[o]	**PF0736**	106,4×59,1×18,4	OK039
GLA 220 CDI 4x4	12/13 →	120	163	LG		[o]	**PF0734**	144,1×71,7×19,3	OK030	LG		[o]	**PF0736**	106,4×59,1×18,4	OK039
GLA 250	12/13 →	155	211	LG	(156.944)	[o]	**PF0734**	144,1×71,7×19,3	OK030	LG		[o]	**PF0736**	106,4×59,1×18,4	OK039
GLA 250 4x4	12/13 →	155	211	LG	(156.946)	[o]	**PF0734**	144,1×71,7×19,3	OK030	LG		[o]	**PF0736**	106,4×59,1×18,4	OK039
GLK (X204)															
200 CDI	07/10 →	105	143	LG	(204.901)	[o]	**PF0313**	146,2×71,5×20,6	OK039/ OK044	ATE		[-]	**PF0314**	122,5×52,1×17,9	
200 CDI	07/10 →	105	143							ATE	(204.901)	[-]	**PF0314**	122,5×52,1×17,9	
220 CDI	12/08 →	125	170	LG	(204.902)	[o]	**PF0313**	146,2×71,5×20,6	OK039/ OK044	ATE		[-]	**PF0314**	122,5×52,1×17,9	
220 CDI	12/08 →	125	170							ATE	(204.902)	[-]	**PF0314**	122,5×52,1×17,9	
220 CDI	12/08 →	120	163	LG	(204.902)	[o]	**PF0313**	146,2×71,5×20,6	OK039/ OK044	ATE		[-]	**PF0314**	122,5×52,1×17,9	
220 CDI	12/08 →	120	163							ATE	(204.902)	[-]	**PF0314**	122,5×52,1×17,9	

MERCEDES-BENZ

GLK (X204)

		KW	CV	SiS	i	W.i.	MAGNETI MARELLI	W×H×Th (mm)	Extra kit [Opt]	SiS	i	W.i.	MAGNETI MARELLI	W×H×Th (mm)	Extra kit [Opt]
220 CDI 4-matic	12/08 →	125	170	LG	(204.984)	[o]	**PF0313**	146,2×71,5×20,6	OK039/ OK044	ATE		[-]	**PF0314**	122,5×52,1×17,9	
220 CDI 4-matic	12/08 →	125	170							ATE	(204.984)	[-]	**PF0314**	122,5×52,1×17,9	
220 CDI 4-matic	12/08 →	120	163	LG	(204.984)	[o]	**PF0313**	146,2×71,5×20,6	OK039/ OK044	ATE		[-]	**PF0314**	122,5×52,1×17,9	
220 CDI 4-matic	12/08 →	120	163							ATE	(204.984)	[-]	**PF0314**	122,5×52,1×17,9	
250 CDI 4-matic	09/09 →	150	204	LG	(204.982)	[o]	**PF0313**	146,2×71,5×20,6	OK039/ OK044	ATE		[-]	**PF0314**	122,5×52,1×17,9	
250 CDI 4-matic	09/09 →	150	204							ATE	(204.982)	[-]	**PF0314**	122,5×52,1×17,9	
280 4-matic	06/08 → 06/09	170	231	LG	(204.981)	[o]	**PF0313**	146,2×71,5×20,6	OK039/ OK044	ATE		[-]	**PF0314**	122,5×52,1×17,9	
280 4-matic	06/08 → 06/09	170	231							ATE	(204.981)	[-]	**PF0314**	122,5×52,1×17,9	
300 4-matic	07/09 →	170	231	LG	(204.981)	[o]	**PF0313**	146,2×71,5×20,6	OK039/ OK044	ATE		[-]	**PF0314**	122,5×52,1×17,9	
300 4-matic	07/09 →	170	231							ATE	(204.981)	[-]	**PF0314**	122,5×52,1×17,9	
320 CDI 4-matic	06/08 →	165	224	LG	(204.983)	[o]	**PF0313**	146,2×71,5×20,6	OK039/ OK044	ATE		[-]	**PF0314**	122,5×52,1×17,9	
320 CDI 4-matic	06/08 →	165	224							ATE	(204.983)	[-]	**PF0314**	122,5×52,1×17,9	
350	04/09 →	200	272	LG	(204.956)	[o]	**PF0313**	146,2×71,5×20,6	OK039/ OK044	ATE		[-]	**PF0314**	122,5×52,1×17,9	
350	04/09 →	200	272							ATE	(204.956)	[-]	**PF0314**	122,5×52,1×17,9	
350 4-matic	06/08 →	200	272	LG	(204.987)	[o]	**PF0313**	146,2×71,5×20,6	OK039/ OK044	ATE		[-]	**PF0314**	122,5×52,1×17,9	
350 4-matic	06/08 →	200	272							ATE	(204.987)	[-]	**PF0314**	122,5×52,1×17,9	
350 4-matic	06/08 →	225	306	LG	(204.988)	[o]	**PF0313**	146,2×71,5×20,6	OK039/ OK044	ATE		[-]	**PF0314**	122,5×52,1×17,9	
350 4-matic	06/08 →	225	306							ATE	(204.988)	[-]	**PF0314**	122,5×52,1×17,9	
350 CDI 4-matic	02/10 →	170	231	LG	(204.922)	[o]	**PF0313**	146,2×71,5×20,6	OK039/ OK044	ATE		[-]	**PF0314**	122,5×52,1×17,9	
350 CDI 4-matic	02/10 →	170	231							ATE	(204.922)	[-]	**PF0314**	122,5×52,1×17,9	
350 CDI 4-matic	07/09 →	165	224	LG	(204.992)	[o]	**PF0313**	146,2×71,5×20,6	OK039/ OK044	ATE		[-]	**PF0314**	122,5×52,1×17,9	
350 CDI 4-matic	07/09 →	165	224							ATE	(204.992)	[-]	**PF0314**	122,5×52,1×17,9	

		KW	CV	SiS	i	W.i.	MAGNETI MARELLI	W×H×Th (mm)	Extra kit [Opt]	SiS	i	W.i.	MAGNETI MARELLI	W×H×Th (mm)	Extra kit [Opt]
MERCEDES-BENZ															
Serie L															
309 D	82→			PT		[-]	**PF0325**	149×69×18	OK068						
310 D	82→			PT		[-]	**PF0325**	149×69×18	OK068						
407 D	82→			PT		[-]	**PF0325**	149×69×18	OK068						
408 D	82→			PT		[-]	**PF0325**	149×69×18	OK068						
409 D	82→			PT		[-]	**PF0325**	149×69×18	OK068						
410 D	82→			PT		[-]	**PF0325**	149×69×18	OK068						
507 D	86→			PT		[-]	**PF0325**	149×69×18	OK068						
508 D	86→			PT		[-]	**PF0325**	149×69×18	OK068						
510 D	86→			PT		[-]	**PF0325**	149×69×18	OK068						
MB 130															
3.0 D Unimog	82→90			LG		[+]	**PF0175**	130×71,2×19	OK032						
3.0 D Unimog	90→			PT		[-]	**PF0325**	149×69×18	OK068						
MB 131															
3.0 TD	82→90			LG		[+]	**PF0175**	130×71,2×19	OK032						
3.0 TD	90→			PT		[-]	**PF0325**	149×69×18	OK068						
ML (W163)															
320	98→05			BR		[o]	**PF0320**	119,8×71,6×17,2							
430	99→05			BR		[o]	**PF0320**	119,8×71,6×17,2							
55 AMG	99→05			BR		[o]	**PF0320**	119,8×71,6×17,2							
ML (164)															
280 CDI 4-matic	07/05→07/09	140	190	ATE	(164.120)	[o]	**PF0639**	194,4×70×20,1		ATE		[-]	**PF0640**	140,5×51,7×17,6	
300 CDI 4-matic	07/09→	140	190	ATE	(164.120)	[o]	**PF0639**	194,4×70×20,1		ATE		[-]	**PF0640**	140,5×51,7×17,6	
300 CDI 4-matic	02/10→	150	204	ATE	(164.121)	[o]	**PF0639**	194,4×70×20,1		ATE		[-]	**PF0640**	140,5×51,7×17,6	
320 CDI 4-matic	07/05→07/09	165	224	ATE	(164.122)	[o]	**PF0639**	194,4×70×20,1		ATE		[-]	**PF0640**	140,5×51,7×17,6	
350 4-matic	07/05→	200	272	ATE	(164.186)	[o]	**PF0639**	194,4×70×20,1		ATE		[-]	**PF0640**	140,5×51,7×17,6	
350 CDI 4-matic	09/09→	155	211	ATE		[o]	**PF0639**	194,4×70×20,1		ATE		[-]	**PF0640**	140,5×51,7×17,6	
350 CDI 4-matic	07/09→	165	224	ATE	(164.122)	[o]	**PF0639**	194,4×70×20,1		ATE		[-]	**PF0640**	140,5×51,7×17,6	
350 CDI 4-matic	02/10→	170	231	ATE	(164.125)	[o]	**PF0639**	194,4×70×20,1		ATE		[-]	**PF0640**	140,5×51,7×17,6	
420 CDI 4-matic	02/06→09/09	225	306	ATE	(164.128)	[o]	**PF0639**	194,4×70×20,1		ATE		[-]	**PF0640**	140,5×51,7×17,6	
450 CDI 4-matic	09/09→	225	306	ATE	(164.128)	[o]	**PF0639**	194,4×70×20,1		ATE		[-]	**PF0640**	140,5×51,7×17,6	
500 4-matic	12/07→	285	388							ATE		[-]	**PF0640**	140,5×51,7×17,6	
500 4-matic	07/05→	225	306							ATE		[-]	**PF0640**	140,5×51,7×17,6	
63 AMG 4-matic	01/06→	375	510							ATE		[-]	**PF0640**	140,5×51,7×17,6	

		KW	CV	SiS	i	W.i.	MAGNETI MARELLI	W×H×Th (mm)	Extra kit [Opt]	SiS	i	W.i.	MAGNETI MARELLI	W×H×Th (mm)	Extra kit [Opt]
MERCEDES-BENZ															
R (W251, V251)															
280	01/07 → 14	170	231	ATE		[o]	**PF0639**	194,4×70×20,1		ATE		[-]	**PF0640**	140,5×51,7×17,6	
280 4-matic	05/07 → 14	170	231	ATE		[o]	**PF0639**	194,4×70×20,1		ATE		[-]	**PF0640**	140,5×51,7×17,6	
280 CDI	05/06 → 14	140	190	ATE		[o]	**PF0639**	194,4×70×20,1		ATE		[-]	**PF0640**	140,5×51,7×17,6	
280 CDI 4-matic	05/06 → 14	140	190	ATE		[o]	**PF0639**	194,4×70×20,1		ATE		[-]	**PF0640**	140,5×51,7×17,6	
300	07/09 → 14	170	231	ATE		[o]	**PF0639**	194,4×70×20,1		ATE		[-]	**PF0640**	140,5×51,7×17,6	
300 CDI	07/09 → 14	140	190	ATE		[o]	**PF0639**	194,4×70×20,1		ATE		[-]	**PF0640**	140,5×51,7×17,6	
300 CDI 4-matic	07/09 → 14	140	190	ATE		[o]	**PF0639**	194,4×70×20,1		ATE		[-]	**PF0640**	140,5×51,7×17,6	
320 CDI 4-matic	01/06 → 14	165	224	ATE		[o]	**PF0639**	194,4×70×20,1		ATE		[-]	**PF0640**	140,5×51,7×17,6	
350	01/07 → 14	200	272	ATE		[o]	**PF0639**	194,4×70×20,1		ATE		[-]	**PF0640**	140,5×51,7×17,6	
350 4-matic	01/06 → 14	200	272	ATE		[o]	**PF0639**	194,4×70×20,1		ATE		[-]	**PF0640**	140,5×51,7×17,6	
350 BlueTEC 4-matic	07/09 → 14	155	211	ATE		[o]	**PF0639**	194,4×70×20,1		ATE		[-]	**PF0640**	140,5×51,7×17,6	
350 CDI 4-matic	07/09 → 14	165	224	ATE		[o]	**PF0639**	194,4×70×20,1		ATE		[-]	**PF0640**	140,5×51,7×17,6	
350 CDI 4-matic	08/10 → 14	195	265	ATE		[o]	**PF0639**	194,4×70×20,1		ATE		[-]	**PF0640**	140,5×51,7×17,6	
500 4-matic	01/07 → 14	285	388							ATE		[-]	**PF0640**	140,5×51,7×17,6	
500 4-matic	01/06 → 14	225	306							ATE		[-]	**PF0640**	140,5×51,7×17,6	
63 AMG	02/06 → 14	375	510							ATE		[-]	**PF0640**	140,5×51,7×17,6	
S (W140)															
280	93 → 98									ATE		[o]	**PF0303**	61,7×69,8×15,2	
280	93 → 98									ATE		[o]	**PF0303**	61,7×69,8×15,2	
300 SE/SEL	91 → 98									ATE		[o]	**PF0303**	61,7×69,8×15,2	
300 TD	96 → 98									ATE		[o]	**PF0303**	61,7×69,8×15,2	
300 TD	96 → 98									ATE		[o]	**PF0303**	61,7×69,8×15,2	
320 SE/SEL	91 → 98									ATE		[o]	**PF0303**	61,7×69,8×15,2	
350 TD	93 → 98									ATE		[o]	**PF0303**	61,7×69,8×15,2	
350 TD	93 → 98									ATE		[o]	**PF0303**	61,7×69,8×15,2	
400 TD	91 → 98									ATE		[o]	**PF0303**	61,7×69,8×15,2	
400 TD	91 → 98									ATE		[o]	**PF0303**	61,7×69,8×15,2	
420 S/SE/SEL	91 → 98									ATE		[o]	**PF0303**	61,7×69,8×15,2	
420 S/SE/SEL	91 → 98									ATE		[o]	**PF0303**	61,7×69,8×15,2	
500 S/SE/SEL	91 → 98									ATE		[o]	**PF0303**	61,7×69,8×15,2	
500 S/SE/SEL	91 → 98									ATE		[o]	**PF0303**	61,7×69,8×15,2	
500 SE/SEL	91 → 98									ATE		[o]	**PF0303**	61,7×69,8×15,2	
500 SE/SEL	91 → 98									ATE		[o]	**PF0303**	61,7×69,8×15,2	
S (W220)															
280	98 → 12/01			BR		[o]	**PF0320**	119,8×71,6×17,2		ATE		[o]	**PF0584**	69×72×16	
280	10/98 →									ATE		[-]	**PF0316**	141,3×57,4×16,5	
280	01/02 →			BR		[o]	**PF0585**	119,8×71,6×17,2		ATE		[o]	**PF0584**	69×72×16	
320	98 → 12/01			BR		[o]	**PF0320**	119,8×71,6×17,2		ATE		[o]	**PF0584**	69×72×16	

		KW	CV	SiS	i	W.i.	MAGNETI MARELLI	W×H×Th (mm)	Extra kit [Opt]	SiS	i	W.i.	MAGNETI MARELLI	W×H×Th (mm)	Extra kit [Opt]
MERCEDES-BENZ															
S (W220)															
320	10/98→									ATE		[-]	PF0316	141,3×57,4×16,5	
320	01/02→			BR		[o]	PF0585	119,8×71,6×17,2		ATE		[o]	PF0584	69×72×16	
320 CDI	98→12/01			BR		[o]	PF0320	119,8×71,6×17,2		ATE		[o]	PF0584	69×72×16	
320 CDI	09/02→									ATE		[-]	PF0316	141,3×57,4×16,5	
320 CDI	01/02→			BR		[o]	PF0585	119,8×71,6×17,2		ATE		[o]	PF0584	69×72×16	
350	09/02→			BR		[o]	PF0585	119,8×71,6×17,2		ATE		[o]	PF0584	69×72×16	
350	09/02→									ATE		[-]	PF0316	141,3×57,4×16,5	
350 4-Matic	06/03→			BR		[o]	PF0585	119,8×71,6×17,2		ATE		[-]	PF0316	141,3×57,4×16,5	
370	05/04→			BR		[o]	PF0585	119,8×71,6×17,2		ATE		[o]	PF0584	69×72×16	
400 Cdi	01/02→			BR		[o]	PF0585	119,8×71,6×17,2		ATE		[o]	PF0584	69×72×16	
400 Cdi	06/03→									ATE		[-]	PF0316	141,3×57,4×16,5	
430	98→12/01			BR		[o]	PF0320	119,8×71,6×17,2		ATE		[o]	PF0584	69×72×16	
430	01/02→			BR		[o]	PF0585	119,8×71,6×17,2		ATE		[o]	PF0584	69×72×16	
430	10/98→									ATE		[-]	PF0316	141,3×57,4×16,5	
430 4-Matic	09/02→			BR		[o]	PF0585	119,8×71,6×17,2		ATE		[-]	PF0316	141,3×57,4×16,5	
500	98→12/01			BR		[o]	PF0320	119,8×71,6×17,2		ATE		[o]	PF0584	69×72×16	
500	10/98→			BR		[o]	PF0585	119,8×71,6×17,2		ATE		[-]	PF0316	141,3×57,4×16,5	
500	01/02→									ATE		[o]	PF0584	69×72×16	
500 4-Matic	09/02→			BR		[o]	PF0585	119,8×71,6×17,2		ATE		[-]	PF0316	141,3×57,4×16,5	
600	98→12/01			BR		[o]	PF0320	119,8×71,6×17,2		ATE		[o]	PF0584	69×72×16	
600	01/02→			BR		[o]	PF0585	119,8×71,6×17,2		ATE		[o]	PF0584	69×72×16	
600	09/02→									ATE		[-]	PF0316	141,3×57,4×16,5	
55 AMG	01/02→			BR		[o]	PF0585	119,8×71,6×17,2		ATE		[o]	PF0584	69×72×16	
S (W221)															
250 CDI	01/11→	150	204	BR	(221.003, 221.103)	[-]	PF0317	141,6×75,8×17,6							
320 CDI	12/05→	173	235	BR	(221.022)	[-]	PF0317	141,6×75,8×17,6							
320 CDI 4-matic	10/06→	173	235	BR		[-]	PF0317	141,6×75,8×17,6							
350	04/11→	190	258	BR		[-]	PF0317	141,6×75,8×17,6							
350	04/11→	225	306	BR		[-]	PF0317	141,6×75,8×17,6							
350	10/05→	200	272	BR	(221.056, 221.156)	[-]	PF0317	141,6×75,8×17,6							
350 4-matic	02/08→	200	272	BR		[-]	PF0317	141,6×75,8×17,6							
350 4Matic	04/11→	190	258	BR		[-]	PF0317	141,6×75,8×17,6							
350 4Matic	04/11→	225	306	BR		[-]	PF0317	141,6×75,8×17,6							
400 Hybrid	01/09→	205	279	BR		[-]	PF0317	141,6×75,8×17,6							
420 CDI	10/06→	235	320	BR		[-]	PF0317	141,6×75,8×17,6							
450	12/05→	250	340	BR		[-]	PF0317	141,6×75,8×17,6							
450 4-matic	12/05→	250	340	BR		[-]	PF0317	141,6×75,8×17,6							
500	04/11→	320	435	BR		[-]	PF0317	141,6×75,8×17,6							
500	10/05→	285	388	BR	(221.071, 221.171)	[-]	PF0317	141,6×75,8×17,6							
500 4-matic	10/05→	285	388	BR		[-]	PF0317	141,6×75,8×17,6							

		KW	CV													
				SiS	i	W.i.	MAGNETI MARELLI	W×H×Th (mm)	Extra kit [Opt]	SiS	i	W.i.	MAGNETI MARELLI	W×H×Th (mm)	Extra kit [Opt]
MERCEDES-BENZ																
S (W221)																
500 4Matic	03/11 →	320	435	BR		[-]	**PF0317**	141,6×75,8×17,6								
600	12/05 →	380	517	BR	(221.176)	[-]	**PF0317**	141,6×75,8×17,6								
63 AMG	10/06 →	386	525	BR		[-]	**PF0317**	141,6×75,8×17,6								
63 AMG	03/11 →	400	544	BR		[-]	**PF0317**	141,6×75,8×17,6								
65 AMG	04/11 →	463	630	BR		[-]	**PF0317**	141,6×75,8×17,6								
65 AMG	12/05 →	450	612	BR		[-]	**PF0317**	141,6×75,8×17,6								
S Coupé (W126)																
55 AMG 5.4	99 →									ATE		[o]	**PF0303**	61,7×69,8×15,2		
S/CL Coupé (C140)																
420	10/94 → 02/99	205	279							ATE		[o]	**PF0303**	61,7×69,8×15,2		
420	10/94 → 02/99	205	279							ATE		[o]	**PF0303**	61,7×69,8×15,2		
500	10/92 → 02/99	235	320							ATE		[o]	**PF0303**	61,7×69,8×15,2		
500	10/92 → 02/99	235	320							ATE		[o]	**PF0303**	61,7×69,8×15,2		
600	09/92 → 02/99	290	394							ATE		[o]	**PF0303**	61,7×69,8×15,2		
600	09/92 → 02/99	290	394							ATE		[o]	**PF0303**	61,7×69,8×15,2		
S/CL Coupé (C215)																
500	03/99 → 03/06	225	306	BR	(215.375)	[o]	**PF0320**	119,8×71,6×17,2		ATE		[o]	**PF0584**	69×72×16		
55 AMG	10/99 → 03/06	265	360	BR	(215.373)	[o]	**PF0320**	119,8×71,6×17,2		ATE		[o]	**PF0584**	69×72×16		
63 AMG	09/01 → 03/06	326	444	BR	(215.378)	[o]	**PF0320**	119,8×71,6×17,2		ATE		[o]	**PF0584**	69×72×16		
S Coupé (C216)																
500	06/06 →	285	388	BR	(216.371)	[-]	**PF0317**	141,6×75,8×17,6		ATE		[-]	**PF0316**	141,3×57,4×16,5		
500	02/11 →	320	435	BR	(216.373)	[-]	**PF0317**	141,6×75,8×17,6		ATE		[-]	**PF0316**	141,3×57,4×16,5		
500 4-matic	02/08 →	285	388	BR	(216.386)	[-]	**PF0317**	141,6×75,8×17,6		ATE		[-]	**PF0316**	141,3×57,4×16,5		
500 4-matic	02/11 →	320	435	BR	(216.394)	[-]	**PF0317**	141,6×75,8×17,6		ATE		[-]	**PF0316**	141,3×57,4×16,5		
600	05/06 →	380	517	BR	(216.376)	[-]	**PF0317**	141,6×75,8×17,6		ATE		[-]	**PF0316**	141,3×57,4×16,5		
63 AMG	02/11 →	400	544	BR		[-]	**PF0317**	141,6×75,8×17,6		ATE		[-]	**PF0316**	141,3×57,4×16,5		
63 AMG	10/06 →	386	525	BR	(216.377)	[-]	**PF0317**	141,6×75,8×17,6		ATE		[-]	**PF0316**	141,3×57,4×16,5		
65 AMG	02/11 →	463	630	BR	(216.379)	[-]	**PF0317**	141,6×75,8×17,6		ATE		[-]	**PF0316**	141,3×57,4×16,5		
65 AMG	10/06 →	450	612	BR	(216.379)	[-]	**PF0317**	141,6×75,8×17,6		ATE		[-]	**PF0316**	141,3×57,4×16,5		
SL (R129)																
280	08/93 → 10/01	142	193		(129.058)					ATE		[o]	**PF0307**	61,7×58,5×15,2		
280	05/98 → 10/01	150	204		(129.059)					ATE		[o]	**PF0307**	61,7×58,5×15,2		
300 SL	03/89 → 08/93	140	190		(129.060)					ATE		[o]	**PF0307**	61,7×58,5×15,2		
300 SL-24	03/89 → 07/93	170	231		(129.061)					ATE		[o]	**PF0307**	61,7×58,5×15,2		
320	09/93 → 10/01	170	231		(129.063)					ATE		[o]	**PF0307**	61,7×58,5×15,2		
320	05/98 → 10/01	165	224		(129.064)					ATE		[o]	**PF0307**	61,7×58,5×15,2		
500	09/92 → 10/01	235	320		(129.067)					ATE		[o]	**PF0307**	61,7×58,5×15,2		
500	05/98 → 10/01	225	306		(129.068)					ATE		[o]	**PF0307**	61,7×58,5×15,2		
500 SL	09/89 → 08/92	240	326		(129.066)					ATE		[o]	**PF0307**	61,7×58,5×15,2		
55 AMG	08/99 → 07/01	350	476							ATE		[o]	**PF0307**	61,7×58,5×15,2		
55 AMG	03/00 → 10/01	260	354		(129.068)					ATE		[o]	**PF0307**	61,7×58,5×15,2		
60 AMG	05/97 → 10/01	280	381		(129.067)					ATE		[o]	**PF0307**	61,7×58,5×15,2		
600	07/92 → 10/01	290	394		(129.076)					ATE		[o]	**PF0307**	61,7×58,5×15,2		
600 SL	02/92 → 05/93	300	408							ATE		[o]	**PF0303**	61,7×69,8×15,2		

		KW	CV	SiS	i	W.i.	MAGNETI MARELLI	W×H×Th (mm)	Extra kit [Opt]	SiS	i	W.i.	MAGNETI MARELLI	W×H×Th (mm)	Extra kit [Opt]
MERCEDES-BENZ															
SL (R230)															
280	03/08→	170	231	BR		[o]	**PF0585**	119,8×71,6×17,2		ATE		[-]	**PF0316**	141,3×57,4×16,5	
300	04/09→	170	231	BR		[o]	**PF0585**	119,8×71,6×17,2		ATE		[-]	**PF0316**	141,3×57,4×16,5	
350	03/06→	200	272	BR		[o]	**PF0585**	119,8×71,6×17,2		ATE		[-]	**PF0316**	141,3×57,4×16,5	
350	04/08→	232	316	BR		[o]	**PF0585**	119,8×71,6×17,2		ATE		[-]	**PF0316**	141,3×57,4×16,5	
350	03/03→	180	245	BR	(230.467)	[o]	**PF0585**	119,8×71,6×17,2		ATE		[-]	**PF0316**	141,3×57,4×16,5	
500	03/06→			BR		[-]	**PF0317**	141,6×75,8×17,6							
SLK (R170)															
200	09/96→03/00	100	136	ATE	(170.435)	[o]	**PF0310**	150,1×59,4×19,5	OK020	ATE		[o]	**PF0307**	61,7×58,5×15,2	
200 Kompressor	03/00→04/04	120	163	ATE	(170.444)	[o]	**PF0310**	150,1×59,4×19,5	OK020	ATE		[-]	**PF0311**	63,8×73×14,2	
200 Kompressor	10/96→03/00	141	192	ATE	(170.445)	[o]	**PF0310**	150,1×59,4×19,5	OK020	ATE		[-]	**PF0311**	63,8×73×14,2	
230 Kompressor	09/96→03/00	142	193	ATE	(170.447)	[o]	**PF0310**	150,1×59,4×19,5	OK020	ATE		[o]	**PF0307**	61,7×58,5×15,2	
230 Kompressor	03/00→04/04	145	197	ATE	(170.449)	[o]	**PF0310**	150,1×59,4×19,5	OK020	ATE		[-]	**PF0311**	63,8×73×14,2	
32 AMG Kompressor	03/01→04/04	260	354	ATE	(170.466)	[o]	**PF0315**	156,4×63,8×20	OK020	ATE		[o]	**PF0303**	61,7×69,8×15,2	
320	03/00→04/04	160	218	ATE	(170.465)	[o]	**PF0315**	156,4×63,8×20	OK020	ATE		[-]	**PF0311**	63,8×73×14,2	
SLK (R171)															
200 Kompressor	06/04→			LG		[o]	**PF0312**	131,1×69,8×19,5	OK037/ OK017/ OK024	ATE		[-]	**PF0311**	63,8×73×14,2	
350	06/04→									ATE		[o]	**PF0553**	63,7×78,2×15,8	
SLK (R172)															
200	02/11→	135	184	LG	+Sport pack	[-]	**PF0653**	188,1×73,7×19		LG		[o]	**PF0736**	106,4×59,1×18,4	OK039
200	02/11→	135	184	LG	+Sport pack	[+]	**PF0654**	188,1×73,7×19		LG		[o]	**PF0736**	106,4×59,1×18,4	OK039
200	02/11→	135	184	LG	+Sport pack	[o]	**PF0313**	146,2×71,5×20,6	OK039/ OK059/ OK027	LG		[o]	**PF0736**	106,4×59,1×18,4	OK039
250	02/11→	150	204	LG	+Sport pack	[-]	**PF0653**	188,1×73,7×19		LG		[o]	**PF0736**	106,4×59,1×18,4	OK039
250	02/11→	150	204	LG	+Sport pack	[+]	**PF0654**	188,1×73,7×19		LG		[o]	**PF0736**	106,4×59,1×18,4	OK039
250	02/11→	150	204	LG	+Sport pack	[o]	**PF0313**	146,2×71,5×20,6	OK039/ OK059/ OK027	LG		[o]	**PF0736**	106,4×59,1×18,4	OK039
250 CDI	02/11→	150	204	LG	+Sport pack	[-]	**PF0653**	188,1×73,7×19		LG		[o]	**PF0736**	106,4×59,1×18,4	OK039
250 CDI	02/11→	150	204	LG	+Sport pack	[+]	**PF0654**	188,1×73,7×19		LG		[o]	**PF0736**	106,4×59,1×18,4	OK039
250 CDI	02/11→	150	204	LG	+Sport pack	[o]	**PF0313**	146,2×71,5×20,6	OK039/ OK059/ OK027	LG		[o]	**PF0736**	106,4×59,1×18,4	OK039
350	02/11→	225	306	LG	+Sport pack	[-]	**PF0653**	188,1×73,7×19		LG		[o]	**PF0736**	106,4×59,1×18,4	OK039
350	02/11→	225	306	LG	+Sport pack	[+]	**PF0654**	188,1×73,7×19		LG		[o]	**PF0736**	106,4×59,1×18,4	OK039

		KW	CV	SiS	i	W.i.	MAGNETI MARELLI	W×H×Th (mm)	Extra kit [Opt]	SiS	i	W.i.	MAGNETI MARELLI	W×H×Th (mm)	Extra kit [Opt]
MERCEDES-BENZ															
SLK (R172)															
350	02/11→	225	306	LG	+Sport pack	[o]	**PF0313**	146,2×71,5×20,6	OK039/ OK059/ OK027	LG		[o]	**PF0736**	106,4×59,1×18,4	OK039
Sprinter 2-t (901-902)															
208 Cdi	04/00→			ATE		[o]	**PF0504**	156,5×64,8×20,5		ATE		[o]	**PF0322**	141,4×50,1×17	OK023
208 Cdi	04/00→			ATE	+w.i.	[+]	**PF0321**	156,5×64,8×20,5		ATE		[+]	**PF0323**	156,4×54,8×18,5	OK023
208 Cdi	04/00→			PT	+KIT	[-]	**PF0524**	164,6×73×20	OK030	ATE		[o]	**PF0505**	156,4×54,8×18,5	OK023
208 Cdi	04/00→			PT		[-]	**PF0324**	164,6×73,1×20		BSC		[o]	**PF0319**	125,9×61,9×18,8	OK021
208 D	95→00			ATE		[o]	**PF0504**	156,5×64,8×20,5		ATE		[o]	**PF0322**	141,4×50,1×17	OK023
208 D	95→00			ATE	+w.i.	[+]	**PF0321**	156,5×64,8×20,5		ATE		[+]	**PF0323**	156,4×54,8×18,5	OK023
208 D	95→00			PT	+KIT	[-]	**PF0524**	164,6×73×20	OK030	ATE		[o]	**PF0505**	156,4×54,8×18,5	OK023
208 D	95→00			PT		[-]	**PF0324**	164,6×73,1×20		BSC		[o]	**PF0319**	125,9×61,9×18,8	OK021
210 D	97→00			ATE		[o]	**PF0504**	156,5×64,8×20,5		ATE		[o]	**PF0322**	141,4×50,1×17	OK023
210 D	97→00			ATE	+w.i.	[+]	**PF0321**	156,5×64,8×20,5		ATE		[+]	**PF0323**	156,4×54,8×18,5	OK023
210 D	97→00			PT	+KIT	[-]	**PF0524**	164,6×73×20	OK030	ATE		[o]	**PF0505**	156,4×54,8×18,5	OK023
210 D	97→00			PT		[-]	**PF0324**	164,6×73,1×20		BSC		[o]	**PF0319**	125,9×61,9×18,8	OK021
211 Cdi	04/00→			ATE		[o]	**PF0504**	156,5×64,8×20,5		ATE		[o]	**PF0322**	141,4×50,1×17	OK023
211 Cdi	04/00→			ATE	+w.i.	[+]	**PF0321**	156,5×64,8×20,5		ATE		[+]	**PF0323**	156,4×54,8×18,5	OK023
211 Cdi	04/00→			PT	+KIT	[-]	**PF0524**	164,6×73×20	OK030	ATE		[o]	**PF0505**	156,4×54,8×18,5	OK023
211 Cdi	04/00→			PT		[-]	**PF0324**	164,6×73,1×20		BSC		[o]	**PF0319**	125,9×61,9×18,8	OK021
212 D	95→00			ATE		[o]	**PF0504**	156,5×64,8×20,5		ATE		[o]	**PF0322**	141,4×50,1×17	OK023
212 D	95→00			ATE	+w.i.	[+]	**PF0321**	156,5×64,8×20,5		ATE		[+]	**PF0323**	156,4×54,8×18,5	OK023
212 D	95→00			PT	+KIT	[-]	**PF0524**	164,6×73×20	OK030	ATE		[o]	**PF0505**	156,4×54,8×18,5	OK023
212 D	95→00			PT		[-]	**PF0324**	164,6×73,1×20		BSC		[o]	**PF0319**	125,9×61,9×18,8	OK021
213 Cdi	04/00→			ATE		[o]	**PF0504**	156,5×64,8×20,5		ATE		[o]	**PF0322**	141,4×50,1×17	OK023
213 Cdi	04/00→			ATE	+w.i.	[+]	**PF0321**	156,5×64,8×20,5		ATE		[+]	**PF0323**	156,4×54,8×18,5	OK023
213 Cdi	04/00→			PT	+KIT	[-]	**PF0524**	164,6×73×20	OK030	ATE		[o]	**PF0505**	156,4×54,8×18,5	OK023
213 Cdi	04/00→			PT		[-]	**PF0324**	164,6×73,1×20		BSC		[o]	**PF0319**	125,9×61,9×18,8	OK021
214	95→			ATE		[o]	**PF0504**	156,5×64,8×20,5		ATE		[o]	**PF0322**	141,4×50,1×17	OK023
214	95→			ATE	+w.i.	[+]	**PF0321**	156,5×64,8×20,5		ATE		[+]	**PF0323**	156,4×54,8×18,5	OK023
214	95→			PT	+KIT	[-]	**PF0524**	164,6×73×20	OK030	ATE		[o]	**PF0505**	156,4×54,8×18,5	OK023
214	95→			PT		[-]	**PF0324**	164,6×73,1×20		BSC		[o]	**PF0319**	125,9×61,9×18,8	OK021
214 NGT	00→			ATE		[o]	**PF0504**	156,5×64,8×20,5		ATE		[o]	**PF0322**	141,4×50,1×17	OK023
214 NGT	00→			ATE	+w.i.	[+]	**PF0321**	156,5×64,8×20,5		ATE		[+]	**PF0323**	156,4×54,8×18,5	OK023
214 NGT	00→			PT	+KIT	[-]	**PF0524**	164,6×73×20	OK030	ATE		[o]	**PF0505**	156,4×54,8×18,5	OK023
214 NGT	00→			PT		[-]	**PF0324**	164,6×73,1×20		BSC		[o]	**PF0319**	125,9×61,9×18,8	OK021
216 Cdi	04/00→			ATE		[o]	**PF0504**	156,5×64,8×20,5		ATE		[o]	**PF0322**	141,4×50,1×17	OK023
216 Cdi	04/00→			ATE	+w.i.	[+]	**PF0321**	156,5×64,8×20,5		ATE		[+]	**PF0323**	156,4×54,8×18,5	OK023
216 Cdi	04/00→			PT	+KIT	[-]	**PF0524**	164,6×73×20	OK030	ATE		[o]	**PF0505**	156,4×54,8×18,5	OK023
216 Cdi	04/00→			PT		[-]	**PF0324**	164,6×73,1×20		BSC		[o]	**PF0319**	125,9×61,9×18,8	OK021
Sprinter 3-t (903)															
308	95→00			PT	+KIT	[-]	**PF0524**	164,6×73×20	OK030	BSC		[o]	**PF0319**	125,9×61,9×18,8	OK021
308	95→00			ATE		[o]	**PF0504**	156,5×64,8×20,5		ATE		[o]	**PF0505**	156,4×54,8×18,5	OK023
308	95→00			ATE	+w.i.	[+]	**PF0321**	156,5×64,8×20,5		ATE		[+]	**PF0323**	156,4×54,8×18,5	OK023

		KW	CV	SiS	i	W.i.	MAGNETI MARELLI	W×H×Th (mm)	Extra kit [Opt]	SiS	i	W.i.	MAGNETI MARELLI	W×H×Th (mm)	Extra kit [Opt]
MERCEDES-BENZ															
Sprinter 3-t (903)															
308 E	00→			PT	+KIT	[-]	**PF0524**	164,6×73×20	OK030	BSC		[o]	**PF0319**	125,9×61,9×18,8	OK021
308 E	00→			PT		[-]	**PF0324**	164,6×73,1×20		BSC		[o]	**PF0319**	125,9×61,9×18,8	OK021
308 E	00→			ATE		[o]	**PF0504**	156,5×64,8×20,5		ATE		[o]	**PF0505**	156,4×54,8×18,5	OK023
308 E	00→			ATE	+w.i.	[+]	**PF0321**	156,5×64,8×20,5		ATE		[+]	**PF0323**	156,4×54,8×18,5	OK023
310 4x4	97→02			PT	+KIT	[-]	**PF0524**	164,6×73×20	OK030	BSC		[o]	**PF0319**	125,9×61,9×18,8	OK021
310 4x4	97→02			PT		[-]	**PF0324**	164,6×73,1×20		BSC		[o]	**PF0319**	125,9×61,9×18,8	OK021
310 4x4	97→02			ATE		[o]	**PF0504**	156,5×64,8×20,5		ATE		[o]	**PF0505**	156,4×54,8×18,5	OK023
310 4x4	97→02			ATE	+w.i.	[+]	**PF0321**	156,5×64,8×20,5		ATE		[+]	**PF0323**	156,4×54,8×18,5	OK023
311	00→			PT	+KIT	[-]	**PF0524**	164,6×73×20	OK030	BSC		[o]	**PF0319**	125,9×61,9×18,8	OK021
311	00→			PT		[-]	**PF0324**	164,6×73,1×20		BSC		[o]	**PF0319**	125,9×61,9×18,8	OK021
311	00→			ATE		[o]	**PF0504**	156,5×64,8×20,5		ATE		[o]	**PF0505**	156,4×54,8×18,5	OK023
311	00→			ATE	+w.i.	[+]	**PF0321**	156,5×64,8×20,5		ATE		[+]	**PF0323**	156,4×54,8×18,5	OK023
311 4x4	02→			PT	+KIT	[-]	**PF0524**	164,6×73×20	OK030	BSC		[o]	**PF0319**	125,9×61,9×18,8	OK021
311 4x4	02→			PT		[-]	**PF0324**	164,6×73,1×20		BSC		[o]	**PF0319**	125,9×61,9×18,8	OK021
311 4x4	02→			ATE		[o]	**PF0504**	156,5×64,8×20,5		ATE		[o]	**PF0505**	156,4×54,8×18,5	OK023
311 4x4	02→			ATE	+w.i.	[+]	**PF0321**	156,5×64,8×20,5		ATE		[+]	**PF0323**	156,4×54,8×18,5	OK023
312	95→00			PT	+KIT	[-]	**PF0524**	164,6×73×20	OK030	BSC		[o]	**PF0319**	125,9×61,9×18,8	OK021
312	95→00			PT		[-]	**PF0324**	164,6×73,1×20		BSC		[o]	**PF0319**	125,9×61,9×18,8	OK021
312	95→00			ATE		[o]	**PF0504**	156,5×64,8×20,5		ATE		[o]	**PF0505**	156,4×54,8×18,5	OK023
312	95→00			ATE	+w.i.	[+]	**PF0321**	156,5×64,8×20,5		ATE		[+]	**PF0323**	156,4×54,8×18,5	OK023
312 4x4	97→02			PT	+KIT	[-]	**PF0524**	164,6×73×20	OK030	BSC		[o]	**PF0319**	125,9×61,9×18,8	OK021
312 4x4	97→02			PT		[-]	**PF0324**	164,6×73,1×20		BSC		[o]	**PF0319**	125,9×61,9×18,8	OK021
312 4x4	97→02			ATE		[o]	**PF0504**	156,5×64,8×20,5		ATE		[o]	**PF0505**	156,4×54,8×18,5	OK023
312 4x4	97→02			ATE	+w.i.	[+]	**PF0321**	156,5×64,8×20,5		ATE		[+]	**PF0323**	156,4×54,8×18,5	OK023
313	00→			PT	+KIT	[-]	**PF0524**	164,6×73×20	OK030	BSC		[o]	**PF0319**	125,9×61,9×18,8	OK021
313	00→			PT		[-]	**PF0324**	164,6×73,1×20		BSC		[o]	**PF0319**	125,9×61,9×18,8	OK021
313	00→			ATE		[o]	**PF0504**	156,5×64,8×20,5		ATE		[o]	**PF0505**	156,4×54,8×18,5	OK023
313	00→			ATE	+w.i.	[+]	**PF0321**	156,5×64,8×20,5		ATE		[+]	**PF0323**	156,4×54,8×18,5	OK023
313 4x4	02→			PT	+KIT	[-]	**PF0524**	164,6×73×20	OK030	BSC		[o]	**PF0319**	125,9×61,9×18,8	OK021
313 4x4	02→			PT		[-]	**PF0324**	164,6×73,1×20		BSC		[o]	**PF0319**	125,9×61,9×18,8	OK021
313 4x4	02→			ATE		[o]	**PF0504**	156,5×64,8×20,5		ATE		[o]	**PF0505**	156,4×54,8×18,5	OK023
313 4x4	02→			ATE	+w.i.	[+]	**PF0321**	156,5×64,8×20,5		ATE		[+]	**PF0323**	156,4×54,8×18,5	OK023
314	02/95→			PT	+KIT	[-]	**PF0524**	164,6×73×20	OK030	BSC		[o]	**PF0319**	125,9×61,9×18,8	OK021
314	02/95→			PT		[-]	**PF0324**	164,6×73,1×20		BSC		[o]	**PF0319**	125,9×61,9×18,8	OK021
314	02/95→			ATE		[o]	**PF0504**	156,5×64,8×20,5		ATE		[o]	**PF0505**	156,4×54,8×18,5	OK023
314	02/95→			ATE	+w.i.	[+]	**PF0321**	156,5×64,8×20,5		ATE		[+]	**PF0323**	156,4×54,8×18,5	OK023
314 NGT	04/00→			PT	+KIT	[-]	**PF0524**	164,6×73×20	OK030	BSC		[o]	**PF0319**	125,9×61,9×18,8	OK021
314 NGT	04/00→			PT		[-]	**PF0324**	164,6×73,1×20		BSC		[o]	**PF0319**	125,9×61,9×18,8	OK021
314 NGT	04/00→			ATE		[o]	**PF0504**	156,5×64,8×20,5		ATE		[o]	**PF0505**	156,4×54,8×18,5	OK023
314 NGT	04/00→			ATE	+w.i.	[+]	**PF0321**	156,5×64,8×20,5		ATE		[+]	**PF0323**	156,4×54,8×18,5	OK023
314 4x4	08/02→			PT	+KIT	[-]	**PF0524**	164,6×73×20	OK030	BSC		[o]	**PF0319**	125,9×61,9×18,8	OK021
314 4x4	08/02→			PT		[-]	**PF0324**	164,6×73,1×20		BSC		[o]	**PF0319**	125,9×61,9×18,8	OK021
314 4x4	08/02→			ATE		[o]	**PF0504**	156,5×64,8×20,5		ATE		[o]	**PF0505**	156,4×54,8×18,5	OK023
314 4x4	08/02→			ATE	+w.i.	[+]	**PF0321**	156,5×64,8×20,5		ATE		[+]	**PF0323**	156,4×54,8×18,5	OK023

		KW	CV	SiS	i	W.i.	MAGNETI MARELLI	W×H×Th (mm)	Extra kit [Opt]	SiS	i	W.i.	MAGNETI MARELLI	W×H×Th (mm)	Extra kit [Opt]
MERCEDES-BENZ															
Sprinter 3-t (903)															
316	00→			PT	+KIT	[-]	**PF0524**	164,6×73×20	OK030	BSC		[o]	**PF0319**	125,9×61,9×18,8	OK021
316	00→			PT		[-]	**PF0324**	164,6×73,1×20		BSC		[o]	**PF0319**	125,9×61,9×18,8	OK021
316	00→			ATE		[o]	**PF0504**	156,5×64,8×20,5		ATE		[o]	**PF0505**	156,4×54,8×18,5	OK023
316	00→			ATE	+w.i.	[+]	**PF0321**	156,5×64,8×20,5		ATE		[+]	**PF0323**	156,4×54,8×18,5	OK023
316 4x4	02→			PT	+KIT	[-]	**PF0524**	164,6×73×20	OK030	BSC		[o]	**PF0319**	125,9×61,9×18,8	OK021
316 4x4	02→			PT		[-]	**PF0324**	164,6×73,1×20		BSC		[o]	**PF0319**	125,9×61,9×18,8	OK021
316 4x4	02→			ATE		[o]	**PF0504**	156,5×64,8×20,5		ATE		[o]	**PF0505**	156,4×54,8×18,5	OK023
316 4x4	02→			ATE	+w.i.	[+]	**PF0321**	156,5×64,8×20,5		ATE		[+]	**PF0323**	156,4×54,8×18,5	OK023
Sprinter 3-t Bus (906)															
210 CDI	03/09→	70	95	BR		[o]	**PF0298**	163,3×67,1×20,9	OK060	BR		[-]	**PF0300**	136,8×63×20	OK033/ OK038/ OK042
211 CDI	06/06→	80	109	BR		[o]	**PF0298**	163,3×67,1×20,9	OK060	BR		[-]	**PF0300**	136,8×63×20	OK033/ OK038/ OK042
215 CDI	06/06→	110	150	BR		[o]	**PF0298**	163,3×67,1×20,9	OK060	BR		[-]	**PF0300**	136,8×63×20	OK033/ OK038/ OK042
216	09/08→	115	156	BR		[o]	**PF0298**	163,3×67,1×20,9	OK060	BR		[-]	**PF0300**	136,8×63×20	OK033/ OK038/ OK042
224	06/06→	190	258	BR		[o]	**PF0298**	163,3×67,1×20,9	OK060	BR		[-]	**PF0300**	136,8×63×20	OK033/ OK038/ OK042
Sprinter 3-t Piatto (906)															
209 CDI	06/06→	65	88	BR		[o]	**PF0298**	163,3×67,1×20,9	OK060	BR		[-]	**PF0300**	136,8×63×20	OK033/ OK038/ OK042
210 CDI	03/09→	70	95	BR		[o]	**PF0298**	163,3×67,1×20,9	OK060	BR		[-]	**PF0300**	136,8×63×20	OK033/ OK038/ OK042
211 CDI	06/06→	80	109	BR		[o]	**PF0298**	163,3×67,1×20,9	OK060	BR		[-]	**PF0300**	136,8×63×20	OK033/ OK038/ OK042
213 CDI	06/06→	95	129	BR		[o]	**PF0298**	163,3×67,1×20,9	OK060	BR		[-]	**PF0300**	136,8×63×20	OK033/ OK038/ OK042
213 CDI	03/09→	95	129	BR		[o]	**PF0298**	163,3×67,1×20,9	OK060	BR		[-]	**PF0300**	136,8×63×20	OK033/ OK038/ OK042
215 CDI	06/06→	110	150	BR		[o]	**PF0298**	163,3×67,1×20,9	OK060	BR		[-]	**PF0300**	136,8×63×20	OK033/ OK038/ OK042

		KW	CV													
				SiS	i	W.i.	MAGNETI MARELLI	W×H×Th (mm)	Extra kit [Opt]	SiS	i	W.i.	MAGNETI MARELLI	W×H×Th (mm)	Extra kit [Opt]
MERCEDES-BENZ															
Sprinter 3-t Piatto (906)															
216	09/08→	115	156	BR	(906.113, 906.213)	[o]	**PF0298**	163,3×67,1×20,9	OK060	BR		[-]	**PF0300**	136,8×63×20	OK033/ OK038/ OK042
216 CDI	03/09→	120	163	BR		[o]	**PF0298**	163,3×67,1×20,9	OK060	BR		[-]	**PF0300**	136,8×63×20	OK033/ OK038/ OK042
218 CDI	06/06→	135	184	BR		[o]	**PF0298**	163,3×67,1×20,9	OK060	BR		[-]	**PF0300**	136,8×63×20	OK033/ OK038/ OK042
219 CDI	03/09→	140	190	BR		[o]	**PF0298**	163,3×67,1×20,9	OK060	BR		[-]	**PF0300**	136,8×63×20	OK033/ OK038/ OK042
224	06/06→	190	258	BR		[o]	**PF0298**	163,3×67,1×20,9	OK060	BR		[-]	**PF0300**	136,8×63×20	OK033/ OK038/ OK042
Sprinter 3-t Van (906)															
209 CDI	06/06→	65	88	BR		[o]	**PF0298**	163,3×67,1×20,9	OK060	BR		[-]	**PF0300**	136,8×63×20	OK033/ OK038/ OK042
210 CDI	03/09→	70	95	BR		[o]	**PF0298**	163,3×67,1×20,9	OK060	BR		[-]	**PF0300**	136,8×63×20	OK033/ OK038/ OK042
211 CDI	06/06→	80	109	BR		[o]	**PF0298**	163,3×67,1×20,9	OK060	BR		[-]	**PF0300**	136,8×63×20	OK033/ OK038/ OK042
213 CDI	06/06→	95	129	BR		[o]	**PF0298**	163,3×67,1×20,9	OK060	BR		[-]	**PF0300**	136,8×63×20	OK033/ OK038/ OK042
215 CDI	06/06→	110	150	BR		[o]	**PF0298**	163,3×67,1×20,9	OK060	BR		[-]	**PF0300**	136,8×63×20	OK033/ OK038/ OK042
216	09/08→	115	156	BR	(906.613)	[o]	**PF0298**	163,3×67,1×20,9	OK060	BR		[-]	**PF0300**	136,8×63×20	OK033/ OK038/ OK042
216 CDI	03/09→	120	163	BR		[o]	**PF0298**	163,3×67,1×20,9	OK060	BR		[-]	**PF0300**	136,8×63×20	OK033/ OK038/ OK042
218 CDI	06/06→	135	184	BR		[o]	**PF0298**	163,3×67,1×20,9	OK060	BR		[-]	**PF0300**	136,8×63×20	OK033/ OK038/ OK042
219 CDI	03/09→	140	190	BR	(906.611, 906.613)	[o]	**PF0298**	163,3×67,1×20,9	OK060	BR		[-]	**PF0300**	136,8×63×20	OK033/ OK038/ OK042

		KW	CV	SiS	i	W.i.	MAGNETI MARELLI	W×H×Th (mm)	Extra kit [Opt]	SiS	i	W.i.	MAGNETI MARELLI	W×H×Th (mm)	Extra kit [Opt]
MERCEDES-BENZ															
Sprinter 3-t Van (906)															
224	06/06 →	190	258	BR		[o]	**PF0298**	163,3×67,1×20,9	OK060	BR		[-]	**PF0300**	136,8×63×20	OK033/ OK038/ OK042
Sprinter 3,5-t Piatto (906)															
309 CDI	06/06 →	65	88	BR		[o]	**PF0298**	163,3×67,1×20,9	OK060	BR		[-]	**PF0300**	136,8×63×20	OK033/ OK038/ OK042
310 CDI	03/09 →	70	95	BR		[o]	**PF0298**	163,3×67,1×20,9	OK060	BR		[-]	**PF0300**	136,8×63×20	OK033/ OK038/ OK042
311 CDI	06/06 →	80	109	BR		[o]	**PF0298**	163,3×67,1×20,9	OK060	BR		[-]	**PF0300**	136,8×63×20	OK033/ OK038/ OK042
311 CDI 4x4	02/08 →	80	109	BR		[o]	**PF0298**	163,3×67,1×20,9	OK060	BR		[-]	**PF0300**	136,8×63×20	OK033/ OK038/ OK042
313 CDI	06/06 →	95	129	BR		[o]	**PF0298**	163,3×67,1×20,9	OK060	BR		[-]	**PF0300**	136,8×63×20	OK033/ OK038/ OK042
313 CDI 4x4	06/06 →	95	129	BR		[o]	**PF0298**	163,3×67,1×20,9	OK060	BR		[-]	**PF0300**	136,8×63×20	OK033/ OK038/ OK042
315 CDI	06/06 →	110	150	BR		[o]	**PF0298**	163,3×67,1×20,9	OK060	BR		[-]	**PF0300**	136,8×63×20	OK033/ OK038/ OK042
315 CDI 4x4	02/08 →	110	150	BR		[o]	**PF0298**	163,3×67,1×20,9	OK060	BR		[-]	**PF0300**	136,8×63×20	OK033/ OK038/ OK042
316	09/08 →	115	156	BR		[o]	**PF0298**	163,3×67,1×20,9	OK060	BR		[-]	**PF0300**	136,8×63×20	OK033/ OK038/ OK042
316 CDI	03/09 →	120	163	BR		[o]	**PF0298**	163,3×67,1×20,9	OK060	BR		[-]	**PF0300**	136,8×63×20	OK033/ OK038/ OK042
316 CDI 4x4	03/09 →	120	163	BR		[o]	**PF0298**	163,3×67,1×20,9	OK060	BR		[-]	**PF0300**	136,8×63×20	OK033/ OK038/ OK042
316 NGT	09/08 →	115	156	BR		[o]	**PF0298**	163,3×67,1×20,9	OK060	BR		[-]	**PF0300**	136,8×63×20	OK033/ OK038/ OK042
318 CDI	06/06 →	135	184	BR		[o]	**PF0298**	163,3×67,1×20,9	OK060	BR		[-]	**PF0300**	136,8×63×20	OK033/ OK038/ OK042

		KW	CV	SiS	i	W.i.	MAGNETI MARELLI	W×H×Th (mm)	Extra kit [Opt]	SiS	i	W.i.	MAGNETI MARELLI	W×H×Th (mm)	Extra kit [Opt]
MERCEDES-BENZ															
Sprinter 3,5-t Piatto (906)															
318 CDI 4x4	02/08→	135	184	BR		[o]	**PF0298**	163,3×67,1×20,9	OK060	BR		[-]	**PF0300**	136,8×63×20	OK033/ OK038/ OK042
319 CDI	03/09→	140	190	BR		[o]	**PF0298**	163,3×67,1×20,9	OK060	BR		[-]	**PF0300**	136,8×63×20	OK033/ OK038/ OK042
324	06/06→	190	258	BR		[o]	**PF0298**	163,3×67,1×20,9	OK060	BR		[-]	**PF0300**	136,8×63×20	OK033/ OK038/ OK042
Sprinter 3,5-t Van (906)															
309 CDI	06/06→	65	88	BR		[o]	**PF0298**	163,3×67,1×20,9	OK060	BR		[-]	**PF0300**	136,8×63×20	OK033/ OK038/ OK042
310 CDI	03/09→	70	95	BR		[o]	**PF0298**	163,3×67,1×20,9	OK060	BR		[-]	**PF0300**	136,8×63×20	OK033/ OK038/ OK042
311 CDI	06/06→	80	109	BR		[o]	**PF0298**	163,3×67,1×20,9	OK060	BR		[-]	**PF0300**	136,8×63×20	OK033/ OK038/ OK042
311 CDI 4x4	02/08→	80	109	BR		[o]	**PF0298**	163,3×67,1×20,9	OK060	BR		[-]	**PF0300**	136,8×63×20	OK033/ OK038/ OK042
313 CDI	06/06→	95	129	BR		[o]	**PF0298**	163,3×67,1×20,9	OK060	BR		[-]	**PF0300**	136,8×63×20	OK033/ OK038/ OK042
315 CDI	06/06→	110	150	BR		[o]	**PF0298**	163,3×67,1×20,9	OK060	BR		[-]	**PF0300**	136,8×63×20	OK033/ OK038/ OK042
315 CDI 4x4	02/08→	110	150	BR		[o]	**PF0298**	163,3×67,1×20,9	OK060	BR		[-]	**PF0300**	136,8×63×20	OK033/ OK038/ OK042
316	09/08→	115	156	BR		[o]	**PF0298**	163,3×67,1×20,9	OK060	BR		[-]	**PF0300**	136,8×63×20	OK033/ OK038/ OK042
316 CDI	03/09→	120	163	BR		[o]	**PF0298**	163,3×67,1×20,9	OK060	BR		[-]	**PF0300**	136,8×63×20	OK033/ OK038/ OK042
316 CDI 4x4	03/09→	120	163	BR		[o]	**PF0298**	163,3×67,1×20,9	OK060	BR		[-]	**PF0300**	136,8×63×20	OK033/ OK038/ OK042
316 NGT	09/08→	115	156	BR		[o]	**PF0298**	163,3×67,1×20,9	OK060	BR		[-]	**PF0300**	136,8×63×20	OK033/ OK038/ OK042

		KW	CV	SiS	i	W.i.	MAGNETI MARELLI	W×H×Th (mm)	Extra kit [Opt]	SiS	i	W.i.	MAGNETI MARELLI	W×H×Th (mm)	Extra kit [Opt]
MERCEDES-BENZ															
Sprinter 3,5-t Van (906)															
318 CDI	06/06 →	135	184	BR		[o]	**PF0298**	163,3×67,1×20,9	OK060	BR		[-]	**PF0300**	136,8×63×20	OK033/ OK038/ OK042
318 CDI 4x4	02/08 →	135	184	BR		[o]	**PF0298**	163,3×67,1×20,9	OK060	BR		[-]	**PF0300**	136,8×63×20	OK033/ OK038/ OK042
319 CDI	03/09 →	140	190	BR		[o]	**PF0298**	163,3×67,1×20,9	OK060	BR		[-]	**PF0300**	136,8×63×20	OK033/ OK038/ OK042
319 CDI 4x4	03/09 →	140	190	BR		[o]	**PF0298**	163,3×67,1×20,9	OK060	BR		[-]	**PF0300**	136,8×63×20	OK033/ OK038/ OK042
324	06/06 →	190	258	BR		[o]	**PF0298**	163,3×67,1×20,9	OK060	BR		[-]	**PF0300**	136,8×63×20	OK033/ OK038/ OK042
Sprinter 3,5-t Bus (906)															
310 CDI	03/09 →	70	95	BR		[o]	**PF0298**	163,3×67,1×20,9	OK060	BR		[-]	**PF0300**	136,8×63×20	OK033/ OK038/ OK042
311 CDI	06/06 →	80	109	BR		[o]	**PF0298**	163,3×67,1×20,9	OK060	BR		[-]	**PF0300**	136,8×63×20	OK033/ OK038/ OK042
311 CDI 4x4	02/08 →	80	109	BR		[o]	**PF0298**	163,3×67,1×20,9	OK060	BR		[-]	**PF0300**	136,8×63×20	OK033/ OK038/ OK042
315 CDI	06/06 →	110	150	BR		[o]	**PF0298**	163,3×67,1×20,9	OK060	BR		[-]	**PF0300**	136,8×63×20	OK033/ OK038/ OK042
315 CDI 4x4	02/08 →	110	150	BR		[o]	**PF0298**	163,3×67,1×20,9	OK060	BR		[-]	**PF0300**	136,8×63×20	OK033/ OK038/ OK042
316	09/08 →	115	156	BR		[o]	**PF0298**	163,3×67,1×20,9	OK060	BR		[-]	**PF0300**	136,8×63×20	OK033/ OK038/ OK042
316 NGT	09/08 →	115	156	BR		[o]	**PF0298**	163,3×67,1×20,9	OK060	BR		[-]	**PF0300**	136,8×63×20	OK033/ OK038/ OK042
318 CDI	02/08 →	135	184	BR		[o]	**PF0298**	163,3×67,1×20,9	OK060	BR		[-]	**PF0300**	136,8×63×20	OK033/ OK038/ OK042
318 CDI 4x4	02/08 →	135	184	BR		[o]	**PF0298**	163,3×67,1×20,9	OK060	BR		[-]	**PF0300**	136,8×63×20	OK033/ OK038/ OK042

		KW	CV													
				SiS	i	W.i.	MAGNETI MARELLI	W×H×Th (mm)	Extra kit [Opt]	SiS	i	W.i.	MAGNETI MARELLI	W×H×Th (mm)	Extra kit [Opt]
MERCEDES-BENZ															
Sprinter 3,5-t Bus (906)															
319 CDI	03/09→	140	190	BR		[o]	**PF0298**	163,3×67,1×20,9	OK060	BR		[-]	**PF0300**	136,8×63×20	OK033/ OK038/ OK042
319 CDI 4x4	03/09→	140	190	BR		[o]	**PF0298**	163,3×67,1×20,9	OK060	BR		[-]	**PF0300**	136,8×63×20	OK033/ OK038/ OK042
324	06/06→	190	258	BR		[o]	**PF0298**	163,3×67,1×20,9	OK060	BR		[-]	**PF0300**	136,8×63×20	OK033/ OK038/ OK042
Sprinter 4-t (904)															
408	04/00→			PT	+KIT	[-]	**PF0524**	164,6×73×20	OK030	PT	+KIT	[-]	**PF0524**	164,6×73×20	OK030
408	04/00→			PT		[+]	**PF0525**	164,6×73×20		PT		[+]	**PF0525**	164,6×73×20	
411	04/00→			PT	+KIT	[-]	**PF0524**	164,6×73×20	OK030	PT	+KIT	[-]	**PF0524**	164,6×73×20	OK030
411	04/00→			PT		[+]	**PF0525**	164,6×73×20		PT		[+]	**PF0525**	164,6×73×20	
412	04/00→			PT	+KIT	[-]	**PF0524**	164,6×73×20	OK030	PT	+KIT	[-]	**PF0524**	164,6×73×20	OK030
412	04/00→			PT		[+]	**PF0525**	164,6×73×20		PT		[+]	**PF0525**	164,6×73×20	
413	04/00→			PT	+KIT	[-]	**PF0524**	164,6×73×20	OK030	PT	+KIT	[-]	**PF0524**	164,6×73×20	OK030
413	04/00→			PT		[+]	**PF0525**	164,6×73×20		PT		[+]	**PF0525**	164,6×73×20	
414	02/96→			PT	+KIT	[-]	**PF0524**	164,6×73×20	OK030	PT	+KIT	[-]	**PF0524**	164,6×73×20	OK030
414	02/96→			PT		[+]	**PF0525**	164,6×73×20		PT		[+]	**PF0525**	164,6×73×20	
416	04/00→			PT	+KIT	[-]	**PF0524**	164,6×73×20	OK030	PT	+KIT	[-]	**PF0524**	164,6×73×20	OK030
416	04/00→			PT		[+]	**PF0525**	164,6×73×20		PT		[+]	**PF0525**	164,6×73×20	
Sprinter 4,6-t (906)															
413 CDI	06/06→	95	129	BR		[o]	**PF0647**	169,3×73,5×20,6	OK060	BR		[-]	**PF0299**	165×78,1×20,5	OK072
413 CDI	06/06→	95	129	BR		[o]	**PF0647**	169,3×73,5×20,6	OK060	BR	Solid Disc	[-]	**PF0300**	136,8×63×20	OK033/ OK038/ OK042
416 CDI	03/09→	120	163	BR		[o]	**PF0647**	169,3×73,5×20,6	OK060	BR		[-]	**PF0299**	165×78,1×20,5	OK072
416 CDI	03/09→	120	163	BR		[o]	**PF0647**	169,3×73,5×20,6	OK060	BR	Solid Disc	[-]	**PF0300**	136,8×63×20	OK033/ OK038/ OK042
419 CDI	03/09→	140	190	BR		[o]	**PF0647**	169,3×73,5×20,6	OK060	BR		[-]	**PF0299**	165×78,1×20,5	OK072
419 CDI	03/09→	140	190	BR		[o]	**PF0647**	169,3×73,5×20,6	OK060	BR	Solid Disc	[-]	**PF0300**	136,8×63×20	OK033/ OK038/ OK042
424	06/06→	190	258	BR		[o]	**PF0647**	169,3×73,5×20,6	OK060	BR		[-]	**PF0299**	165×78,1×20,5	OK072
424	06/06→	190	258	BR		[o]	**PF0647**	169,3×73,5×20,6	OK060	BR	Solid Disc	[-]	**PF0300**	136,8×63×20	OK033/ OK038/ OK042
413 CDI	06/06→	95	129	BR		[o]	**PF0647**	169,3×73,5×20,6	OK060	BR		[-]	**PF0299**	165×78,1×20,5	OK072
413 CDI	06/06→	95	129	BR		[o]	**PF0647**	169,3×73,5×20,6	OK060	BR	Solid Disc	[-]	**PF0300**	136,8×63×20	OK033/ OK038/ OK042
415 CDI	06/06→	110	150	BR		[o]	**PF0647**	169,3×73,5×20,6	OK060	BR		[-]	**PF0299**	165×78,1×20,5	OK072

		KW	CV													
				SiS	i	W.i.	MAGNETI MARELLI	W×H×Th (mm)	Extra kit [Opt]	SiS	i	W.i.	MAGNETI MARELLI	W×H×Th (mm)	Extra kit [Opt]
MERCEDES-BENZ																
Sprinter 4,6-t (906)																
415 CDI	06/06 →	110	150	BR		[o]	**PF0647**	169,3×73,5×20,6	OK060	BR	Solid Disc	[-]	**PF0300**	136,8×63×20	OK033/ OK038/ OK042
416 CDI	03/09 →	120	163	BR		[o]	**PF0647**	169,3×73,5×20,6	OK060	BR		[-]	**PF0299**	165×78,1×20,5	OK072
416 CDI	03/09 →	120	163	BR		[o]	**PF0647**	169,3×73,5×20,6	OK060	BR	Solid Disc	[-]	**PF0300**	136,8×63×20	OK033/ OK038/ OK042
418 CDI	06/06 →	135	184	BR		[o]	**PF0647**	169,3×73,5×20,6	OK060	BR		[-]	**PF0299**	165×78,1×20,5	OK072
418 CDI	06/06 →	135	184	BR		[o]	**PF0647**	169,3×73,5×20,6	OK060	BR	Solid Disc	[-]	**PF0300**	136,8×63×20	OK033/ OK038/ OK042
419 CDI	03/09 →	140	190	BR		[o]	**PF0647**	169,3×73,5×20,6	OK060	BR		[-]	**PF0299**	165×78,1×20,5	OK072
419 CDI	03/09 →	140	190	BR		[o]	**PF0647**	169,3×73,5×20,6	OK060	BR	Solid Disc	[-]	**PF0300**	136,8×63×20	OK033/ OK038/ OK042
424	06/06 →	190	258	BR		[o]	**PF0647**	169,3×73,5×20,6	OK060	BR		[-]	**PF0299**	165×78,1×20,5	OK072
424	06/06 →	190	258	BR		[o]	**PF0647**	169,3×73,5×20,6	OK060	BR	Solid Disc	[-]	**PF0300**	136,8×63×20	OK033/ OK038/ OK042
Sprinter 5-t (906)																
509 CDI	06/06 →	65	88	BR		[o]	**PF0647**	169,3×73,5×20,6	OK060	BR		[-]	**PF0299**	165×78,1×20,5	OK072
510 CDI	03/09 →	70	95	BR		[o]	**PF0647**	169,3×73,5×20,6	OK060	BR		[-]	**PF0299**	165×78,1×20,5	OK072
511 CDI	06/06 →	80	109	BR		[o]	**PF0647**	169,3×73,5×20,6	OK060	BR		[-]	**PF0299**	165×78,1×20,5	OK072
513 CDI	06/06 →	95	129	BR		[o]	**PF0647**	169,3×73,5×20,6	OK060	BR		[-]	**PF0299**	165×78,1×20,5	OK072
515 CDI	06/06 →	110	150	BR		[o]	**PF0647**	169,3×73,5×20,6	OK060	BR		[-]	**PF0299**	165×78,1×20,5	OK072
516 CDI	03/09 →	120	163	BR		[o]	**PF0647**	169,3×73,5×20,6	OK060	BR		[-]	**PF0299**	165×78,1×20,5	OK072
518 CDI	06/06 →	135	184	BR		[o]	**PF0647**	169,3×73,5×20,6	OK060	BR		[-]	**PF0299**	165×78,1×20,5	OK072
519 CDI	03/09 →	140	190	BR		[o]	**PF0647**	169,3×73,5×20,6	OK060	BR		[-]	**PF0299**	165×78,1×20,5	OK072
524	06/06 →	190	258	BR		[o]	**PF0647**	169,3×73,5×20,6	OK060	BR		[-]	**PF0299**	165×78,1×20,5	OK072
Sprinter 5-t Piatto (906)																
509 CDI	06/06 →	65	88	BR		[o]	**PF0647**	169,3×73,5×20,6	OK060	BR		[-]	**PF0299**	165×78,1×20,5	OK072
510 CDI	03/09 →	70	95	BR		[o]	**PF0647**	169,3×73,5×20,6	OK060	BR		[-]	**PF0299**	165×78,1×20,5	OK072
511 CDI	06/06 →	80	109	BR		[o]	**PF0647**	169,3×73,5×20,6	OK060	BR		[-]	**PF0299**	165×78,1×20,5	OK072
513 CDI	06/06 →	95	129	BR		[o]	**PF0647**	169,3×73,5×20,6	OK060	BR		[-]	**PF0299**	165×78,1×20,5	OK072
515 CDI	06/06 →	110	150	BR		[o]	**PF0647**	169,3×73,5×20,6	OK060	BR		[-]	**PF0299**	165×78,1×20,5	OK072
516	09/08 →	115	156	BR		[o]	**PF0647**	169,3×73,5×20,6	OK060	BR		[-]	**PF0299**	165×78,1×20,5	OK072
516 CDI	03/09 →	120	163	BR		[o]	**PF0647**	169,3×73,5×20,6	OK060	BR		[-]	**PF0299**	165×78,1×20,5	OK072
516 NGT	09/08 →	115	156	BR		[o]	**PF0647**	169,3×73,5×20,6	OK060	BR		[-]	**PF0299**	165×78,1×20,5	OK072
518 CDI	06/06 →	135	184	BR		[o]	**PF0647**	169,3×73,5×20,6	OK060	BR		[-]	**PF0299**	165×78,1×20,5	OK072
519 CDI	03/09 →	140	190	BR		[o]	**PF0647**	169,3×73,5×20,6	OK060	BR		[-]	**PF0299**	165×78,1×20,5	OK072
524	06/06 →	190	258	BR		[o]	**PF0647**	169,3×73,5×20,6	OK060	BR		[-]	**PF0299**	165×78,1×20,5	OK072
Sprinter 6-t (906)																
616 CDI	04/01 →	115	156	BR		[o]	**PF0480**	164,8×68×20,6	OK060						
616 CDI	04/01 →	115	156	BR		[+]	**PF0481**	164,8×68×20,6							

		KW	CV	SiS	i	W.i.	MAGNETI MARELLI	W×H×Th (mm)	Extra kit [Opt]	SiS	i	W.i.	MAGNETI MARELLI	W×H×Th (mm)	Extra kit [Opt]
MERCEDES-BENZ															
Sprinter 6-t Piatto (906)															
616 CDI	04/01→	115	156	BR		[o]	**PF0480**	164,8×68×20,6	OK060						
616 CDI	04/01→	115	156	BR		[+]	**PF0481**	164,8×68×20,6							
V (638)															
200 cdi	99→			BSC		[o]	**PF0327**	134,5×64,6×20,8	OK023	BSC		[-]	**PF0328**	105×52,8×17,8	
200 cdi	99→			BSC		[o]	**PF0327**	134,5×64,6×20,8	OK023	BSC		[-]	**PF0328**	105×52,8×17,8	
200i	96→97			ATE		[o]	**PF0504**	156,5×64,8×20,5		ATE		[+]	**PF0326**	63,8×57,6×17	
200i	96→97			ATE		[o]	**PF0504**	156,5×64,8×20,5		ATE		[-]	**PF0482**	63,8×57,6×17	
200i	96→97			ATE	+w.i.	[+]	**PF0321**	156,5×64,8×20,5							
200i	98→			BSC		[o]	**PF0327**	134,5×64,6×20,8	OK023	BSC		[-]	**PF0328**	105×52,8×17,8	
220 Cdi	96→97			ATE		[o]	**PF0504**	156,5×64,8×20,5		ATE		[-]	**PF0482**	63,8×57,6×17	
220 Cdi	96→97			ATE		[o]	**PF0504**	156,5×64,8×20,5		ATE		[-]	**PF0326**	63,8×57,6×17	
220 Cdi	96→97			ATE	+w.i.	[+]	**PF0321**	156,5×64,8×20,5							
220 Cdi	98→			BSC		[o]	**PF0327**	134,5×64,6×20,8	OK023	BSC		[-]	**PF0328**	105×52,8×17,8	
230 D	96→97			ATE		[o]	**PF0504**	156,5×64,8×20,5		ATE		[+]	**PF0326**	63,8×57,6×17	
230 D	96→97			ATE	+w.i.	[+]	**PF0321**	156,5×64,8×20,5							
230 TD	96→97			ATE		[o]	**PF0504**	156,5×64,8×20,5		ATE		[-]	**PF0482**	63,8×57,6×17	
230 TD	96→97			ATE	+w.i.	[+]	**PF0321**	156,5×64,8×20,5							
230 TD	98→			BSC		[o]	**PF0327**	134,5×64,6×20,8	OK023	BSC		[-]	**PF0328**	105×52,8×17,8	
230i	96→97			ATE		[o]	**PF0504**	156,5×64,8×20,5		ATE		[-]	**PF0482**	63,8×57,6×17	
230i	96→97			ATE		[o]	**PF0504**	156,5×64,8×20,5		ATE		[+]	**PF0326**	63,8×57,6×17	
230i	96→97			ATE	+w.i.	[+]	**PF0321**	156,5×64,8×20,5							
230i	98→			BSC		[o]	**PF0327**	134,5×64,6×20,8	OK023	BSC		[-]	**PF0328**	105×52,8×17,8	
280i	96→97			ATE		[o]	**PF0504**	156,5×64,8×20,5		ATE		[+]	**PF0326**	63,8×57,6×17	
280i	96→97			ATE		[o]	**PF0504**	156,5×64,8×20,5		ATE		[-]	**PF0482**	63,8×57,6×17	
280i	96→97			ATE	+w.i.	[+]	**PF0321**	156,5×64,8×20,5							
280i	98→			BSC		[o]	**PF0327**	134,5×64,6×20,8	OK023	BSC		[-]	**PF0328**	105×52,8×17,8	
V (447)															
V 200 CDI	03/14→	100	136	BSC		[o]	**PF0327**	134,5×64,6×20,8		BSC		[-]	**PF0328**	105×52,8×17,8	
V 220 CDI	03/14→	120	163	BSC		[o]	**PF0327**	134,5×64,6×20,8		BSC		[-]	**PF0328**	105×52,8×17,8	
V 250 BlueTEC	03/14→	140	190	BSC		[o]	**PF0327**	134,5×64,6×20,8		BSC		[-]	**PF0328**	105×52,8×17,8	
Vaneo (414)															
1.4	06/02→	60	82	LG		[+]	**PF0517**	116,8×57,2×19,5	OK012/ OK073	LG		[-]	**PF0308**	96,5×41,5×14,3	OK037/ OK062
1.6	02/02→	75	102	LG	(414.700)	[+]	**PF0517**	116,8×57,2×19,5	OK012/ OK073	LG		[-]	**PF0308**	96,5×41,5×14,3	OK037/ OK062
1.6	02/02→	60	82	LG	(414.700)	[+]	**PF0517**	116,8×57,2×19,5	OK012/ OK073	BR		[-]	**PF0330**	101,9×50,3×18,3	OK033/ OK038/ OK042
1.7 CDI	02/02→	55	75	LG	(414.700)	[+]	**PF0517**	116,8×57,2×19,5	OK012/ OK073	BR		[-]	**PF0330**	101,9×50,3×18,3	OK033/ OK038/ OK042

		KW	CV	SiS	i	W.i.	MAGNETI MARELLI	W×H×Th (mm)	Extra kit [Opt]	SiS	i	W.i.	MAGNETI MARELLI	W×H×Th (mm)	Extra kit [Opt]
MERCEDES-BENZ															
Vaneo (414)															
1.7 CDI	02/02→	67	91	LG	(414.700)	[+]	**PF0517**	116,8×57,2×19,5	OK012/ OK073	BR		[-]	**PF0330**	101,9×50,3×18,3	OK033/ OK038/ OK042
1.9	02/02→	92	125	LG	(414.700)	[+]	**PF0517**	116,8×57,2×19,5	OK012/ OK073	BR		[-]	**PF0330**	101,9×50,3×18,3	OK033/ OK038/ OK042
Viano (W639)															
2.0 CDI 4-matic	07/10→	100	136	BR		[-]	**PF0329**	164,9×60×20,6	OK033/ OK038/ OK042	BR		[-]	**PF0330**	101,9×50,3×18,3	OK033/ OK038/ OK042
2.0 CDI 4-matic	07/10→	100	136	BR		[+]	**PF0617**	164,9×60×20,6	OK033/ OK038/ OK042	BR		[-]	**PF0330**	101,9×50,3×18,3	OK033/ OK038/ OK042
2.0 CDI 4-matic	07/05→	80	109	BR		[-]	**PF0329**	164,9×60×20,6	OK033/ OK038/ OK042	BR		[-]	**PF0330**	101,9×50,3×18,3	OK033/ OK038/ OK042
2.2 CDI 4-matic	07/05→	80	109	BR		[+]	**PF0617**	164,9×60×20,6	OK033/ OK038/ OK042	BR		[-]	**PF0330**	101,9×50,3×18,3	OK033/ OK038/ OK042
2.2 CDI 4-matic	07/10→	120	163	BR		[-]	**PF0329**	164,9×60×20,6	OK033/ OK038/ OK042	BR		[-]	**PF0330**	101,9×50,3×18,3	OK033/ OK038/ OK042
3.0	07/10→	120	163	BR		[+]	**PF0617**	164,9×60×20,6	OK033/ OK038/ OK042	BR		[-]	**PF0330**	101,9×50,3×18,3	OK033/ OK038/ OK042
3.0	09/03→	140	190	BR		[-]	**PF0329**	164,9×60×20,6	OK033/ OK038/ OK042	BR		[-]	**PF0330**	101,9×50,3×18,3	OK033/ OK038/ OK042
3.2	09/03→	140	190	BR		[+]	**PF0617**	164,9×60×20,6	OK033/ OK038/ OK042	BR		[-]	**PF0330**	101,9×50,3×18,3	OK033/ OK038/ OK042
3.2	09/03→	160	218	BR		[-]	**PF0329**	164,9×60×20,6	OK033/ OK038/ OK042	BR		[-]	**PF0330**	101,9×50,3×18,3	OK033/ OK038/ OK042
3.2	09/03→	160	218	BR		[+]	**PF0617**	164,9×60×20,6	OK033/ OK038/ OK042	BR		[-]	**PF0330**	101,9×50,3×18,3	OK033/ OK038/ OK042
3.5	09/07→	190	258	BR		[-]	**PF0329**	164,9×60×20,6	OK033/ OK038/ OK042	BR		[-]	**PF0330**	101,9×50,3×18,3	OK033/ OK038/ OK042
3.5	09/07→	190	258	BR		[+]	**PF0617**	164,9×60×20,6	OK033/ OK038/ OK042	BR		[-]	**PF0330**	101,9×50,3×18,3	OK033/ OK038/ OK042

		KW	CV													
				SiS	i	W.i.	MAGNETI MARELLI	W×H×Th (mm)	Extra kit [Opt]	SiS	i	W.i.	MAGNETI MARELLI	W×H×Th (mm)	Extra kit [Opt]
MERCEDES-BENZ															
Viano (W639)															
3.7	06/04→	170	231	BR		[-]	**PF0329**	164,9×60×20,6	OK033/ OK038/ OK042	BR		[-]	**PF0330**	101,9×50,3×18,3	OK033/ OK038/ OK042
3.7	06/04→	170	231	BR		[+]	**PF0617**	164,9×60×20,6	OK033/ OK038/ OK042	BR		[-]	**PF0330**	101,9×50,3×18,3	OK033/ OK038/ OK042
CDI 2.0	07/10→	100	136	BR		[-]	**PF0329**	164,9×60×20,6	OK033/ OK038/ OK042	BR		[-]	**PF0330**	101,9×50,3×18,3	OK033/ OK038/ OK042
CDI 2.0	07/10→	100	136	BR		[+]	**PF0617**	164,9×60×20,6	OK033/ OK038/ OK042	BR		[-]	**PF0330**	101,9×50,3×18,3	OK033/ OK038/ OK042
CDI 2.0	09/03→	80	109	BR		[-]	**PF0329**	164,9×60×20,6	OK033/ OK038/ OK042	BR		[-]	**PF0330**	101,9×50,3×18,3	OK033/ OK038/ OK042
CDI 2.0	09/03→	80	109	BR		[+]	**PF0617**	164,9×60×20,6	OK033/ OK038/ OK042	BR		[-]	**PF0330**	101,9×50,3×18,3	OK033/ OK038/ OK042
CDI 2.0	08/05→	85	116	BR		[-]	**PF0329**	164,9×60×20,6	OK033/ OK038/ OK042	BR		[-]	**PF0330**	101,9×50,3×18,3	OK033/ OK038/ OK042
CDI 2.0	08/05→	85	116	BR		[+]	**PF0617**	164,9×60×20,6	OK033/ OK038/ OK042	BR		[-]	**PF0330**	101,9×50,3×18,3	OK033/ OK038/ OK042
CDI 2.2	07/10→	120	163	BR		[-]	**PF0329**	164,9×60×20,6	OK033/ OK038/ OK042	BR		[-]	**PF0330**	101,9×50,3×18,3	OK033/ OK038/ OK042
CDI 2.2	07/10→	120	163	BR		[+]	**PF0617**	164,9×60×20,6	OK033/ OK038/ OK042	BR		[-]	**PF0330**	101,9×50,3×18,3	OK033/ OK038/ OK042
CDI 2.2	09/03→	110	150	BR		[-]	**PF0329**	164,9×60×20,6	OK033/ OK038/ OK042	BR		[-]	**PF0330**	101,9×50,3×18,3	OK033/ OK038/ OK042
CDI 2.2	09/03→	110	150	BR		[+]	**PF0617**	164,9×60×20,6	OK033/ OK038/ OK042	BR		[-]	**PF0330**	101,9×50,3×18,3	OK033/ OK038/ OK042
CDI 2.2 4-matic	07/05→	110	150	BR		[-]	**PF0329**	164,9×60×20,6	OK033/ OK038/ OK042	BR		[-]	**PF0330**	101,9×50,3×18,3	OK033/ OK038/ OK042
CDI 2.2 4-matic	07/05→	110	150	BR		[+]	**PF0617**	164,9×60×20,6	OK033/ OK038/ OK042	BR		[-]	**PF0330**	101,9×50,3×18,3	OK033/ OK038/ OK042

		KW	CV	SiS	i	W.i.	MAGNETI MARELLI	W×H×Th (mm)	Extra kit [Opt]	SiS	i	W.i.	MAGNETI MARELLI	W×H×Th (mm)	Extra kit [Opt]
MERCEDES-BENZ															
Viano (W639)															
CDI 3.0	07/10→	165	224	BR		[-]	**PF0329**	164,9×60×20,6	OK033/ OK038/ OK042	BR		[-]	**PF0330**	101,9×50,3×18,3	OK033/ OK038/ OK042
CDI 3.0	07/10→	165	224	BR		[+]	**PF0617**	164,9×60×20,6	OK033/ OK038/ OK042	BR		[-]	**PF0330**	101,9×50,3×18,3	OK033/ OK038/ OK042
CDI 3.0	03/06→	150	204	BR		[-]	**PF0329**	164,9×60×20,6	OK033/ OK038/ OK042	BR		[-]	**PF0330**	101,9×50,3×18,3	OK033/ OK038/ OK042
CDI 3.0	03/06→	150	204	BR		[+]	**PF0617**	164,9×60×20,6	OK033/ OK038/ OK042	BR		[-]	**PF0330**	101,9×50,3×18,3	OK033/ OK038/ OK042
Vito															
108 2.2 cdi	99→03	60		BSC		[o]	**PF0327**	134,5×64,6×20,8	OK023	BSC		[-]	**PF0328**	105×52,8×17,8	
108 2.3	95→03			ATE		[o]	**PF0504**	156,5×64,8×20,5		ATE		[-]	**PF0482**	63,8×57,6×17	
108 2.3	95→03			ATE	+w.i.	[+]	**PF0321**	156,5×64,8×20,5							
108 2.3 D	95→03			ATE		[o]	**PF0504**	156,5×64,8×20,5		ATE		[-]	**PF0482**	63,8×57,6×17	
108 2.3 D	97→03			ATE		[o]	**PF0504**	156,5×64,8×20,5		ATE		[+]	**PF0326**	63,8×57,6×17	
108 2.3 D	97→03			ATE	+w.i.	[+]	**PF0321**	156,5×64,8×20,5							
108 2.3 D	98→03	57		BSC		[o]	**PF0327**	134,5×64,6×20,8	OK023	BSC		[-]	**PF0328**	105×52,8×17,8	
108 2.3 TD	95→03			ATE		[o]	**PF0504**	156,5×64,8×20,5		ATE		[-]	**PF0482**	63,8×57,6×17	
108 2.3 TD	95→03			ATE	+w.i.	[+]	**PF0321**	156,5×64,8×20,5							
110 2.2 cdi	99→03	75		BSC		[o]	**PF0327**	134,5×64,6×20,8	OK023	BSC		[-]	**PF0328**	105×52,8×17,8	
110 2.3	95→03			ATE		[o]	**PF0504**	156,5×64,8×20,5		ATE		[-]	**PF0482**	63,8×57,6×17	
110 2.3	95→03			ATE	+w.i.	[+]	**PF0321**	156,5×64,8×20,5							
110 2.3 D	95→03			ATE		[o]	**PF0504**	156,5×64,8×20,5		ATE		[-]	**PF0482**	63,8×57,6×17	
110 2.3 D	95→03			ATE	+w.i.	[+]	**PF0321**	156,5×64,8×20,5							
110 2.3 TD	95→03			ATE		[o]	**PF0504**	156,5×64,8×20,5		ATE		[-]	**PF0482**	63,8×57,6×17	
110 2.3 TD	96→03			ATE		[o]	**PF0504**	156,5×64,8×20,5		ATE		[+]	**PF0326**	63,8×57,6×17	
110 2.3 TD	96→03			ATE	+w.i.	[+]	**PF0321**	156,5×64,8×20,5							
110 2.3 TD	98→03	72		BSC		[o]	**PF0327**	134,5×64,6×20,8	OK023	BSC		[-]	**PF0328**	105×52,8×17,8	
112 2.2 cdi	99→03	90		BSC		[o]	**PF0327**	134,5×64,6×20,8	OK023	BSC		[-]	**PF0328**	105×52,8×17,8	
113 2.0i	96→03	95		ATE		[o]	**PF0504**	156,5×64,8×20,5		ATE		[-]	**PF0482**	63,8×57,6×17	
113 2.0i	96→03	95		ATE	+w.i.	[+]	**PF0321**	156,5×64,8×20,5							
113 2.0i	96→03			ATE		[o]	**PF0504**	156,5×64,8×20,5		ATE		[+]	**PF0326**	63,8×57,6×17	
113 2.0i	96→03			ATE	+w.i.	[+]	**PF0321**	156,5×64,8×20,5							
113 2.0i	98→03	95		BSC		[o]	**PF0327**	134,5×64,6×20,8	OK023	BSC		[-]	**PF0328**	105×52,8×17,8	
114 2.3i	96→03	105		ATE		[o]	**PF0504**	156,5×64,8×20,5		ATE		[-]	**PF0482**	63,8×57,6×17	
114 2.3i	96→03	105		ATE	+w.i.	[+]	**PF0321**	156,5×64,8×20,5							
114 2.3i	96→03			ATE		[o]	**PF0504**	156,5×64,8×20,5		ATE		[+]	**PF0326**	63,8×57,6×17	
114 2.3i	96→03			ATE	+w.i.	[+]	**PF0321**	156,5×64,8×20,5							
114 2.3i	98→03	105		BSC		[o]	**PF0327**	134,5×64,6×20,8	OK023	BSC		[-]	**PF0328**	105×52,8×17,8	

		KW	CV													
				SiS	i	W.i.	MAGNETI MARELLI	W×H×Th (mm)	Extra kit [Opt]	SiS	i	W.i.	MAGNETI MARELLI	W×H×Th (mm)	Extra kit [Opt]
MERCEDES-BENZ															
Vito II (W639)															
2.0 Cdi	09/03→			BR		[-]	**PF0329**	164,9×60×20,6	OK033/ OK038/ OK042	BR		[-]	**PF0330**	101,9×50,3×18,3	OK033/ OK038/ OK042
2.0 Cdi	09/03→			BR		[+]	**PF0617**	164,9×60×20,6	OK033/ OK038/ OK042	BR		[-]	**PF0330**	101,9×50,3×18,3	OK033/ OK038/ OK042
2.2 Cdi	09/03→			BR		[-]	**PF0329**	164,9×60×20,6	OK033/ OK038/ OK042	BR		[-]	**PF0330**	101,9×50,3×18,3	OK033/ OK038/ OK042
2.2 Cdi	09/03→			BR		[+]	**PF0617**	164,9×60×20,6	OK033/ OK038/ OK042	BR		[-]	**PF0330**	101,9×50,3×18,3	OK033/ OK038/ OK042
109 2.2 Cdi	09/03→			BR		[-]	**PF0329**	164,9×60×20,6	OK033/ OK038/ OK042	BR		[-]	**PF0330**	101,9×50,3×18,3	OK033/ OK038/ OK042
109 2.2 Cdi	09/03→			BR		[+]	**PF0617**	164,9×60×20,6	OK033/ OK038/ OK042	BR		[-]	**PF0330**	101,9×50,3×18,3	OK033/ OK038/ OK042
3.0	09/03→			BR		[-]	**PF0329**	164,9×60×20,6	OK033/ OK038/ OK042	BR		[-]	**PF0330**	101,9×50,3×18,3	OK033/ OK038/ OK042
3.0	09/03→			BR		[+]	**PF0617**	164,9×60×20,6	OK033/ OK038/ OK042	BR		[-]	**PF0330**	101,9×50,3×18,3	OK033/ OK038/ OK042
3.2	09/03→			BR		[-]	**PF0329**	164,9×60×20,6	OK033/ OK038/ OK042	BR		[-]	**PF0330**	101,9×50,3×18,3	OK033/ OK038/ OK042
3.2	09/03→			BR		[+]	**PF0617**	164,9×60×20,6	OK033/ OK038/ OK042	BR		[-]	**PF0330**	101,9×50,3×18,3	OK033/ OK038/ OK042
Vito II Mixto Van (W639)															
109 CDI	09/03→	65	88	BR		[-]	**PF0329**	164,9×60×20,6	OK033/ OK038/ OK042	BR		[-]	**PF0330**	101,9×50,3×18,3	OK033/ OK038/ OK042
109 CDI	09/03→	65	88	BR		[+]	**PF0617**	164,9×60×20,6	OK033/ OK038/ OK042	BR		[-]	**PF0330**	101,9×50,3×18,3	OK033/ OK038/ OK042
109 CDi	08/06→	70	95	BR		[-]	**PF0329**	164,9×60×20,6	OK033/ OK038/ OK042	BR		[-]	**PF0330**	101,9×50,3×18,3	OK033/ OK038/ OK042
109 CDi	08/06→	70	95	BR		[+]	**PF0617**	164,9×60×20,6	OK033/ OK038/ OK042	BR		[-]	**PF0330**	101,9×50,3×18,3	OK033/ OK038/ OK042

MAGNETI MARELLI

MERCEDES-BENZ

Vito II Mixto Van (W639)

		KW	CV	SiS	i	W.i.	MAGNETI MARELLI	W×H×Th (mm)	Extra kit [Opt]	SiS	i	W.i.	MAGNETI MARELLI	W×H×Th (mm)	Extra kit [Opt]
110 CDI	09/10 →	70	95	BR		[-]	**PF0329**	164,9×60×20,6	OK033/ OK038/ OK042	BR		[-]	**PF0330**	101,9×50,3×18,3	OK033/ OK038/ OK042
110 CDI	09/10 →	70	95	BR		[+]	**PF0617**	164,9×60×20,6	OK033/ OK038/ OK042	BR		[-]	**PF0330**	101,9×50,3×18,3	OK033/ OK038/ OK042
111 CDI	09/03 →	80	109	BR		[-]	**PF0329**	164,9×60×20,6	OK033/ OK038/ OK042	BR		[-]	**PF0330**	101,9×50,3×18,3	OK033/ OK038/ OK042
111 CDI	09/03 →	80	109	BR		[+]	**PF0617**	164,9×60×20,6	OK033/ OK038/ OK042	BR		[-]	**PF0330**	101,9×50,3×18,3	OK033/ OK038/ OK042
111 CDI	09/07 →	85	116	BR		[-]	**PF0329**	164,9×60×20,6	OK033/ OK038/ OK042	BR		[-]	**PF0330**	101,9×50,3×18,3	OK033/ OK038/ OK042
111 CDI	09/07 →	85	116	BR		[+]	**PF0617**	164,9×60×20,6	OK033/ OK038/ OK042	BR		[-]	**PF0330**	101,9×50,3×18,3	OK033/ OK038/ OK042
111 CDI 4x4	09/07 →	80	109	BR		[-]	**PF0329**	164,9×60×20,6	OK033/ OK038/ OK042	BR		[-]	**PF0330**	101,9×50,3×18,3	OK033/ OK038/ OK042
111 CDI 4x4	09/07 →	80	109	BR		[+]	**PF0617**	164,9×60×20,6	OK033/ OK038/ OK042	BR		[-]	**PF0330**	101,9×50,3×18,3	OK033/ OK038/ OK042
113 CDI	09/10 →	100	136	BR		[-]	**PF0329**	164,9×60×20,6	OK033/ OK038/ OK042	BR		[-]	**PF0330**	101,9×50,3×18,3	OK033/ OK038/ OK042
113 CDI	09/10 →	100	136	BR		[+]	**PF0617**	164,9×60×20,6	OK033/ OK038/ OK042	BR		[-]	**PF0330**	101,9×50,3×18,3	OK033/ OK038/ OK042
115 CDI	09/03 →	110	150	BR		[-]	**PF0329**	164,9×60×20,6	OK033/ OK038/ OK042	BR		[-]	**PF0330**	101,9×50,3×18,3	OK033/ OK038/ OK042
115 CDI	09/03 →	110	150	BR		[+]	**PF0617**	164,9×60×20,6	OK033/ OK038/ OK042	BR		[-]	**PF0330**	101,9×50,3×18,3	OK033/ OK038/ OK042
115 CDI 4x4	09/07 →	110	150	BR		[-]	**PF0329**	164,9×60×20,6	OK033/ OK038/ OK042	BR		[-]	**PF0330**	101,9×50,3×18,3	OK033/ OK038/ OK042
115 CDI 4x4	09/07 →	110	150	BR		[+]	**PF0617**	164,9×60×20,6	OK033/ OK038/ OK042	BR		[-]	**PF0330**	101,9×50,3×18,3	OK033/ OK038/ OK042

MERCEDES-BENZ

Vito II Mixto Van (W639)

		KW	CV	SiS	i	W.i.	MAGNETI MARELLI	W×H×Th (mm)	Extra kit [Opt]	SiS	i	W.i.	MAGNETI MARELLI	W×H×Th (mm)	Extra kit [Opt]
116 CDI	09/10 →	120	163	BR		[-]	**PF0329**	164,9×60×20,6	OK033/ OK038/ OK042	BR		[-]	**PF0330**	101,9×50,3×18,3	OK033/ OK038/ OK042
116 CDI	09/10 →	120	163	BR		[+]	**PF0617**	164,9×60×20,6	OK033/ OK038/ OK042	BR		[-]	**PF0330**	101,9×50,3×18,3	OK033/ OK038/ OK042
119	09/03 →	140	190	BR		[-]	**PF0329**	164,9×60×20,6	OK033/ OK038/ OK042	BR		[-]	**PF0330**	101,9×50,3×18,3	OK033/ OK038/ OK042
119	09/03 →	140	190	BR		[+]	**PF0617**	164,9×60×20,6	OK033/ OK038/ OK042	BR		[-]	**PF0330**	101,9×50,3×18,3	OK033/ OK038/ OK042
120 CDI	09/07 →	150	204	BR		[-]	**PF0329**	164,9×60×20,6	OK033/ OK038/ OK042	BR		[-]	**PF0330**	101,9×50,3×18,3	OK033/ OK038/ OK042
120 CDI	09/07 →	150	204	BR		[+]	**PF0617**	164,9×60×20,6	OK033/ OK038/ OK042	BR		[-]	**PF0330**	101,9×50,3×18,3	OK033/ OK038/ OK042
122	09/03 →	160	218	BR		[-]	**PF0329**	164,9×60×20,6	OK033/ OK038/ OK042	BR		[-]	**PF0330**	101,9×50,3×18,3	OK033/ OK038/ OK042
122	09/03 →	160	218	BR		[+]	**PF0617**	164,9×60×20,6	OK033/ OK038/ OK042	BR		[-]	**PF0330**	101,9×50,3×18,3	OK033/ OK038/ OK042
122 CDI	09/10 →	165	224	BR		[-]	**PF0329**	164,9×60×20,6	OK033/ OK038/ OK042	BR		[-]	**PF0330**	101,9×50,3×18,3	OK033/ OK038/ OK042
122 CDI	09/10 →	165	224	BR		[+]	**PF0617**	164,9×60×20,6	OK033/ OK038/ OK042	BR		[-]	**PF0330**	101,9×50,3×18,3	OK033/ OK038/ OK042
123	06/04 → 07/08	170	231	BR	(639.603)	[-]	**PF0329**	164,9×60×20,6	OK033/ OK038/ OK042	BR		[-]	**PF0330**	101,9×50,3×18,3	OK033/ OK038/ OK042
123	06/04 → 07/08	170	231	BR	(639.603)	[+]	**PF0617**	164,9×60×20,6	OK033/ OK038/ OK042	BR		[-]	**PF0330**	101,9×50,3×18,3	OK033/ OK038/ OK042
126	09/07 →	190	258	BR		[-]	**PF0329**	164,9×60×20,6	OK033/ OK038/ OK042	BR		[-]	**PF0330**	101,9×50,3×18,3	OK033/ OK038/ OK042
126	09/07 →	190	258	BR		[+]	**PF0617**	164,9×60×20,6	OK033/ OK038/ OK042	BR		[-]	**PF0330**	101,9×50,3×18,3	OK033/ OK038/ OK042

		KW	CV													
				SiS	i	W.i.	MAGNETI MARELLI	W×H×Th (mm)	Extra kit [Opt]	SiS	i	W.i.	MAGNETI MARELLI	W×H×Th (mm)	Extra kit [Opt]
MG																
MGR V8																
3.9	09/92 → 12/95	140	190	LG		[+]	**PF0484**	129,2×69,7×18	OK037						
ZR																
105	06/01 →	76	103	LG		[+]	**PF0484**	129,2×69,7×18	OK037	LG		[+]	**PF0457**	88,9×35,2×13	
120	06/01 →	86	117	LG		[+]	**PF0484**	129,2×69,7×18	OK037	LG		[+]	**PF0457**	88,9×35,2×13	
160	06/01 →	118	160	LG		[+]	**PF0484**	129,2×69,7×18	OK037	LG		[+]	**PF0457**	88,9×35,2×13	
2.0 TD	12/02 → 12/05	82	111	LG		[+]	**PF0484**	129,2×69,7×18	OK037	LG		[+]	**PF0457**	88,9×35,2×13	
Turbodiesel	06/01 →	74	100	LG		[+]	**PF0484**	129,2×69,7×18	OK037	LG		[+]	**PF0457**	88,9×35,2×13	
ZS																
1.6	07/03 → 12/05	79	107	LG		[+]	**PF0484**	129,2×69,7×18	OK037	AK		[+]	**PF0457**	88,9×35,2×13	
120	07/01 →	86	117	LG		[+]	**PF0484**	129,2×69,7×18	OK037	AK		[+]	**PF0457**	88,9×35,2×13	
180	07/01 →	130	177	LG		[+]	**PF0484**	129,2×69,7×18	OK037	AK		[+]	**PF0457**	88,9×35,2×13	
2.0 TD	01/04 →	74	101	LG		[+]	**PF0484**	129,2×69,7×18	OK037	AK		[+]	**PF0457**	88,9×35,2×13	
2.0 TD	01/04 →	83	113	LG		[+]	**PF0484**	129,2×69,7×18	OK037	AK		[+]	**PF0457**	88,9×35,2×13	
ZS Hatchback																
1.6	11/01 → 10/05	82	111	LG		[+]	**PF0484**	129,2×69,7×18	OK037	AK		[+]	**PF0457**	88,9×35,2×13	
120	07/01 →	86	117	LG		[+]	**PF0484**	129,2×69,7×18	OK037	AK		[+]	**PF0457**	88,9×35,2×13	
180	07/01 →	130	177	LG		[+]	**PF0484**	129,2×69,7×18	OK037	AK		[+]	**PF0457**	88,9×35,2×13	
2.0 TD	01/04 →	74	101	LG		[+]	**PF0484**	129,2×69,7×18	OK037	AK		[+]	**PF0457**	88,9×35,2×13	
2.0 TD	01/04 →	83	113	LG		[+]	**PF0484**	129,2×69,7×18	OK037	AK		[+]	**PF0457**	88,9×35,2×13	
ZT																
1.8 16V	01/03 →	88	120							ATE		[o]	**PF0157**	123,1×43,7×17,3	OK022
1.8 T 16V	01/03 →	118	160							ATE		[o]	**PF0157**	123,1×43,7×17,3	OK022
160	06/01 →	118	160							ATE		[o]	**PF0157**	123,1×43,7×17,3	OK022
180	01/03 →	130	177							ATE		[o]	**PF0157**	123,1×43,7×17,3	OK022
190	06/01 →	140	190							ATE		[o]	**PF0157**	123,1×43,7×17,3	OK022
2.0 CDTi	11/02 →	96	131							ATE		[o]	**PF0157**	123,1×43,7×17,3	OK022
2.0 CDTi	06/02 → 09/03	85	116							ATE		[o]	**PF0157**	123,1×43,7×17,3	OK022
260	10/03 →	191	260							ATE		[o]	**PF0157**	123,1×43,7×17,3	OK022
ZT-T																
1.8 16V	01/03 →	88	120							ATE		[o]	**PF0157**	123,1×43,7×17,3	OK022
1.8 T 16V	01/03 →	118	160							ATE		[o]	**PF0157**	123,1×43,7×17,3	OK022
160	10/01 →	118	160							ATE		[o]	**PF0157**	123,1×43,7×17,3	OK022
180	01/03 →	130	177							ATE		[o]	**PF0157**	123,1×43,7×17,3	OK022
190	10/01 →	140	190							ATE		[o]	**PF0157**	123,1×43,7×17,3	OK022
2.0 CDTi	11/02 →	96	131							ATE		[o]	**PF0157**	123,1×43,7×17,3	OK022
2.0 CDTi	06/02 → 09/03	85	116							ATE		[o]	**PF0157**	123,1×43,7×17,3	OK022
260	10/03 →	191	260							ATE		[o]	**PF0157**	123,1×43,7×17,3	OK022
MINI (BMW)																
Cabriolet (R52)																
Cooper	07/04 →	85	116	ATE		[o]	**PF0332**	140×59×18,3	OK055	ATE		[o]	**PF0331**	123,2×43,8×16,1	OK057
Cooper S	07/04 →	125	170	ATE		[o]	**PF0332**	140×59×18,3	OK055	ATE		[o]	**PF0331**	123,2×43,8×16,1	OK057
John Cooper Works	07/04 →	155	210	ATE		[o]	**PF0332**	140×59×18,3	OK055	ATE		[o]	**PF0331**	123,2×43,8×16,1	OK057

		KW	CV	SiS	i	W.i.	MAGNETI MARELLI	W×H×Th (mm)	Extra kit [Opt]	SiS	i	W.i.	MAGNETI MARELLI	W×H×Th (mm)	Extra kit [Opt]
MINI (BMW)															
Cabriolet (R52)															
One	07/04→	66	90	ATE		[o]	**PF0332**	140×59×18,3	OK055	ATE		[o]	**PF0331**	123,2×43,8×16,1	OK057
Cabriolet (R57)															
Cooper	03/09→	85	116	LG		[o]	**PF0147**	131,6×53,3×17,8	OK032/ OK063	ATE		[o]	**PF0331**	123,2×43,8×16,1	OK057
Cooper	03/09→	88	120	LG		[o]	**PF0147**	131,6×53,3×17,8	OK032/ OK063	ATE		[o]	**PF0331**	123,2×43,8×16,1	OK057
Cooper	03/09→	88	120							LG		[-]	**PF0626**	95,5×39,2×17,2	OK039/ OK057/ OK064
Cooper	03/10→	90	122	LG		[o]	**PF0147**	131,6×53,3×17,8	OK032/ OK063	ATE		[o]	**PF0331**	123,2×43,8×16,1	OK057
Cooper	03/10→	90	122							LG		[-]	**PF0626**	95,5×39,2×17,2	OK039/ OK057/ OK064
Cooper D	02/11→	82	112	LG		[o]	**PF0147**	131,6×53,3×17,8	OK032/ OK063	ATE		[o]	**PF0331**	123,2×43,8×16,1	OK057
Cooper D	02/11→	82	112							LG		[-]	**PF0626**	95,5×39,2×17,2	OK039/ OK057/ OK064
Cooper D	06/10→	82	112	LG		[o]	**PF0147**	131,6×53,3×17,8	OK032/ OK063	ATE		[o]	**PF0331**	123,2×43,8×16,1	OK057
Cooper D	06/10→	82	112							LG		[-]	**PF0626**	95,5×39,2×17,2	OK039/ OK057/ OK064
Cooper S	03/09→	128	174	LG		[o]	**PF0147**	131,6×53,3×17,8	OK032/ OK063	ATE		[o]	**PF0331**	123,2×43,8×16,1	OK057
Cooper S	03/09→	128	174							LG		[-]	**PF0626**	95,5×39,2×17,2	OK039/ OK057/ OK064
Cooper S	03/10→	135	184	LG		[o]	**PF0147**	131,6×53,3×17,8	OK032/ OK063	ATE		[o]	**PF0331**	123,2×43,8×16,1	OK057
Cooper S	03/10→	147	200	LG		[o]	**PF0147**	131,6×53,3×17,8	OK032/ OK063	ATE		[o]	**PF0331**	123,2×43,8×16,1	OK057
Cooper S	03/10→	135	184							LG		[-]	**PF0626**	95,5×39,2×17,2	OK039/ OK057/ OK064
Cooper SD	02/11→	105	143	LG		[o]	**PF0147**	131,6×53,3×17,8	OK032/ OK063	ATE		[o]	**PF0331**	123,2×43,8×16,1	OK057
Cooper SD	02/11→	105	143							LG		[-]	**PF0626**	95,5×39,2×17,2	OK039/ OK057/ OK064
John Cooper Works	03/08→	155	211	LG		[o]	**PF0147**	131,6×53,3×17,8	OK032/ OK063	ATE		[o]	**PF0331**	123,2×43,8×16,1	OK057

		KW	CV	SiS	i	W.i.	MAGNETI MARELLI	W×H×Th (mm)	Extra kit [Opt]	SiS	i	W.i.	MAGNETI MARELLI	W×H×Th (mm)	Extra kit [Opt]
MINI (BMW)															
Cabriolet (R57)															
John Cooper Works	03/08 →	155	211							LG		[-]	**PF0626**	95,5×39,2×17,2	OK039/ OK057/ OK064
One	03/10 →	72	98	LG		[o]	**PF0147**	131,6×53,3×17,8	OK032/ OK063	ATE		[o]	**PF0331**	123,2×43,8×16,1	OK057
One	03/10 →	72	98							LG		[-]	**PF0626**	95,5×39,2×17,2	OK039/ OK057/ OK064
Clubman (R55)															
Cooper	03/10 →	85	115	LG		[o]	**PF0147**	131,6×53,3×17,8	OK032/ OK063	LG		[-]	**PF0626**	95,5×39,2×17,2	OK039/ OK057/ OK064
Cooper	10/07 →	88	120	LG		[o]	**PF0147**	131,6×53,3×17,8	OK032/ OK063	LG		[-]	**PF0626**	95,5×39,2×17,2	OK039/ OK057/ OK064
Cooper	10/07 →	88	120							LG		[-]	**PF0626**	95,5×39,2×17,2	OK039/ OK057/ OK064
Cooper	03/10 →	90	122	LG		[o]	**PF0147**	131,6×53,3×17,8	OK032/ OK063	LG		[-]	**PF0626**	95,5×39,2×17,2	OK039/ OK057/ OK064
Cooper	03/10 →	90	122							LG		[-]	**PF0626**	95,5×39,2×17,2	OK039/ OK057/ OK064
Cooper D	02/11 →	82	112	LG		[o]	**PF0147**	131,6×53,3×17,8	OK032/ OK063	LG		[-]	**PF0626**	95,5×39,2×17,2	OK039/ OK057/ OK064
Cooper D	02/11 →	82	112							LG		[-]	**PF0626**	95,5×39,2×17,2	OK039/ OK057/ OK064
Cooper D	10/07 →	80	109	LG		[o]	**PF0147**	131,6×53,3×17,8	OK032/ OK063	LG		[-]	**PF0626**	95,5×39,2×17,2	OK039/ OK057/ OK064
Cooper D	10/07 →	80	109							LG		[-]	**PF0626**	95,5×39,2×17,2	OK039/ OK057/ OK064
Cooper D	03/10 →	82	112	LG		[o]	**PF0147**	131,6×53,3×17,8	OK032/ OK063	LG		[-]	**PF0626**	95,5×39,2×17,2	OK039/ OK057/ OK064
Cooper D	03/10 →	82	112							LG		[-]	**PF0626**	95,5×39,2×17,2	OK039/ OK057/ OK064

MINI (BMW)

Clubman (R55)

		KW	CV	SiS	i	W.i.	MAGNETI MARELLI	W×H×Th (mm)	Extra kit [Opt]	SiS	i	W.i.	MAGNETI MARELLI	W×H×Th (mm)	Extra kit [Opt]
Cooper S	10/07→	120	163	LG		[o]	**PF0147**	131,6×53,3×17,8	OK032/ OK063	LG		[-]	**PF0626**	95,5×39,2×17,2	OK039/ OK057/ OK064
Cooper S	10/07→	120	163							LG		[-]	**PF0626**	95,5×39,2×17,2	OK039/ OK057/ OK064
Cooper S	10/07→	128	174	LG		[o]	**PF0147**	131,6×53,3×17,8	OK032/ OK063	LG		[-]	**PF0626**	95,5×39,2×17,2	OK039/ OK057/ OK064
Cooper S	10/07→	128	174							LG		[-]	**PF0626**	95,5×39,2×17,2	OK039/ OK057/ OK064
Cooper S	03/10→	135	184	LG		[o]	**PF0147**	131,6×53,3×17,8	OK032/ OK063	LG		[-]	**PF0626**	95,5×39,2×17,2	OK039/ OK057/ OK064
Cooper S	03/10→	147	200	LG		[o]	**PF0147**	131,6×53,3×17,8	OK032/ OK063	LG		[-]	**PF0626**	95,5×39,2×17,2	OK039/ OK057/ OK064
Cooper S	03/10→	135	184							LG		[-]	**PF0626**	95,5×39,2×17,2	OK039/ OK057/ OK064
Cooper SD	02/11→	105	143	LG		[o]	**PF0147**	131,6×53,3×17,8	OK032/ OK063	LG		[-]	**PF0626**	95,5×39,2×17,2	OK039/ OK057/ OK064
Cooper SD	02/11→	100	136	LG		[o]	**PF0147**	131,6×53,3×17,8	OK032/ OK063	LG		[-]	**PF0626**	95,5×39,2×17,2	OK039/ OK057/ OK064
Cooper SD	02/11→	105	143							LG		[-]	**PF0626**	95,5×39,2×17,2	OK039/ OK057/ OK064
John Cooper Works	03/08→	155	211	LG		[o]	**PF0147**	131,6×53,3×17,8	OK032/ OK063	LG		[-]	**PF0626**	95,5×39,2×17,2	OK039/ OK057/ OK064
John Cooper Works	03/08→	155	211							LG		[-]	**PF0626**	95,5×39,2×17,2	OK039/ OK057/ OK064
One	03/10→	72	98	LG		[o]	**PF0147**	131,6×53,3×17,8	OK032/ OK063	LG		[-]	**PF0626**	95,5×39,2×17,2	OK039/ OK057/ OK064
One	03/10→	72	98							LG		[-]	**PF0626**	95,5×39,2×17,2	OK039/ OK057/ OK064

		KW	CV	SiS	i	W.i.	MAGNETI MARELLI	W×H×Th (mm)	Extra kit [Opt]	SiS	i	W.i.	MAGNETI MARELLI	W×H×Th (mm)	Extra kit [Opt]
MINI (BMW)															
Clubman (R55)															
One	03/09 → 02/10	70	95	LG		[o]	**PF0147**	131,6×53,3×17,8	OK032/ OK063	LG		[-]	**PF0626**	95,5×39,2×17,2	OK039/ OK057/ OK064
One	03/09 → 02/10	70	95							LG		[-]	**PF0626**	95,5×39,2×17,2	OK039/ OK057/ OK064
One D	03/10 →	66	90	LG		[o]	**PF0147**	131,6×53,3×17,8	OK032/ OK063	LG		[-]	**PF0626**	95,5×39,2×17,2	OK039/ OK057/ OK064
One D	03/10 →	66	90							LG		[-]	**PF0626**	95,5×39,2×17,2	OK039/ OK057/ OK064
ClubVan (R55)															
Cooper	12/12 →	90	122	LG		[o]	**PF0147**	131,6×53,3×17,8	OK032	LG		[-]	**PF0626**	95,5×39,2×17,2	OK039/ OK057/ OK064
Cooper D	12/12 →	82	112	LG		[o]	**PF0147**	131,6×53,3×17,8	OK032	LG		[-]	**PF0626**	95,5×39,2×17,2	OK039/ OK057/ OK064
One	12/12 →	72	98	LG		[o]	**PF0147**	131,6×53,3×17,8	OK032	LG		[-]	**PF0626**	95,5×39,2×17,2	OK039/ OK057/ OK064
Cooper One (R50_R53)															
1.4 D	06/03 →			ATE		[o]	**PF0332**	140×59×18,3	OK055	ATE		[o]	**PF0331**	123,2×43,8×16,1	OK057
1.4i	03/07 →			LG		[o]	**PF0147**	131,6×53,3×17,8	OK032/ OK055/ OK063	LG		[-]	**PF0626**	95,5×39,2×17,2	OK039/ OK057/ OK064
1.6 16V	01 → 02/03			ATE		[o]	**PF0332**	140×59×18,3	OK055	ATE		[-]	**PF0574**	123,2×43,8×16,1	
1.6 16V	02/03 →			ATE		[o]	**PF0332**	140×59×18,3	OK055	ATE		[o]	**PF0331**	123,2×43,8×16,1	OK057
One D	03/07 →	55		LG		[o]	**PF0147**	131,6×53,3×17,8	OK032/ OK055/ OK063	LG		[-]	**PF0626**	95,5×39,2×17,2	OK039/ OK057/ OK064
One D	03/07 →	65		LG		[o]	**PF0147**	131,6×53,3×17,8	OK032/ OK055/ OK063	LG		[-]	**PF0626**	95,5×39,2×17,2	OK039/ OK057/ OK064
Cooper One S (R50_R53)															
1.6 16V	03/02 → 02/03			ATE		[o]	**PF0332**	140×59×18,3	OK055	ATE		[-]	**PF0574**	123,2×43,8×16,1	
1.6 16V	02/03 →			ATE		[o]	**PF0332**	140×59×18,3	OK055	ATE		[o]	**PF0331**	123,2×43,8×16,1	OK057
Cooper One S (R56)															
Cooper	03/10 →	85	115	LG		[o]	**PF0147**	131,6×53,3×17,8	OK032/ OK063	LG		[-]	**PF0626**	95,5×39,2×17,2	OK039/ OK057/ OK064

		KW	CV														
				SiS	i	W.i.	MAGNETI MARELLI	W×H×Th (mm)	Extra kit [Opt]	SiS	i	W.i.	MAGNETI MARELLI	W×H×Th (mm)	Extra kit [Opt]
MINI (BMW)															
Cooper One S (R56)															
Cooper SD	02/11→	100	136	LG		[o]	**PF0147**	131,6×53,3×17,8	OK032/ OK063	LG		[-]	**PF0626**	95,5×39,2×17,2	OK039/ OK057/ OK064
Cooper S	03/10→	120	163	LG		[o]	**PF0147**	131,6×53,3×17,8	OK032/ OK063	LG		[-]	**PF0626**	95,5×39,2×17,2	OK039/ OK057/ OK064
Cooper S	01/12→	147	200	LG		[o]	**PF0147**	131,6×53,3×17,8	OK032/ OK063	LG		[-]	**PF0626**	95,5×39,2×17,2	OK039/ OK057/ OK064
Cooper John Cooper Works															
Cooper	06→			LG	(JCW)	[o]	**PF0619**	131,5×64×18	OK030	ATE	(JCW)	[o]	**PF0331**	123,2×43,8×16,1	OK057
Cooper	10→									LG	(JCW)	[-]	**PF0626**	95,5×39,2×17,2	OK039/ OK057/ OK064
Cooper S	06→			LG	(JCW)	[o]	**PF0619**	131,5×64×18	OK030	ATE	(JCW)	[o]	**PF0331**	123,2×43,8×16,1	OK057
Cooper S	10→									LG	(JCW)	[-]	**PF0626**	95,5×39,2×17,2	OK039/ OK057/ OK064
Coupé (R58)															
Cooper	09/11→	85	115	LG		[o]	**PF0147**	131,6×53,3×17,8	OK032/ OK063	LG		[-]	**PF0626**	95,5×39,2×17,2	OK039/ OK057/ OK064
Cooper	09/11→	90	122	LG		[o]	**PF0147**	131,6×53,3×17,8	OK032/ OK063	LG		[-]	**PF0626**	95,5×39,2×17,2	OK039/ OK057/ OK064
Cooper S	09/11→	120	163	LG		[o]	**PF0147**	131,6×53,3×17,8	OK032/ OK063	LG		[-]	**PF0626**	95,5×39,2×17,2	OK039/ OK057/ OK064
Cooper S	09/11→	135	184	LG		[o]	**PF0147**	131,6×53,3×17,8	OK032/ OK063	LG		[-]	**PF0626**	95,5×39,2×17,2	OK039/ OK057/ OK064
Cooper S	09/11→	147	200	LG		[o]	**PF0147**	131,6×53,3×17,8	OK032/ OK063	LG		[-]	**PF0626**	95,5×39,2×17,2	OK039/ OK057/ OK064
Cooper SD	09/11→	100	136	LG		[o]	**PF0147**	131,6×53,3×17,8	OK032/ OK063	LG		[-]	**PF0626**	95,5×39,2×17,2	OK039/ OK057/ OK064
Cooper SD	09/11→	105	143	LG		[o]	**PF0147**	131,6×53,3×17,8	OK032/ OK063	LG		[-]	**PF0626**	95,5×39,2×17,2	OK039/ OK057/ OK064
John Cooper Works	09/11→	155	211	LG		[o]	**PF0147**	131,6×53,3×17,8	OK032/ OK063	LG		[-]	**PF0626**	95,5×39,2×17,2	OK039/ OK057/ OK064

		KW	CV	SiS	i	W.i.	MAGNETI MARELLI	W×H×Th (mm)	Extra kit [Opt]	SiS	i	W.i.	MAGNETI MARELLI	W×H×Th (mm)	Extra kit [Opt]
MINI (BMW)															
Countryman (R60)															
Cooper	06/10→	85	115	LG		[o]	**PF0619**	131,5×64×18	OK030	LG		[-]	**PF0623**	95,4×45×16,8	OK039
Cooper	06/10→	90	122	LG		[o]	**PF0619**	131,5×64×18	OK030	LG		[-]	**PF0623**	95,4×45×16,8	OK039
Cooper D	02/11→	82	112	LG		[o]	**PF0619**	131,5×64×18	OK030	LG		[-]	**PF0623**	95,4×45×16,8	OK039
Cooper D	06/10→	82	112	LG		[o]	**PF0619**	131,5×64×18	OK030	LG		[-]	**PF0623**	95,4×45×16,8	OK039
Cooper D ALL4	02/11→	82	112	LG		[o]	**PF0619**	131,5×64×18	OK030	LG		[-]	**PF0623**	95,4×45×16,8	OK039
Cooper D ALL4	06/10→	82	112	LG		[o]	**PF0619**	131,5×64×18	OK030	LG		[-]	**PF0623**	95,4×45×16,8	OK039
Cooper S	06/10→	120	163	LG		[o]	**PF0619**	131,5×64×18	OK030	LG		[-]	**PF0623**	95,4×45×16,8	OK039
Cooper S	06/10→	135	184	LG		[o]	**PF0619**	131,5×64×18	OK030	LG		[-]	**PF0623**	95,4×45×16,8	OK039
Cooper S	02/12→	147	200	LG		[o]	**PF0619**	131,5×64×18	OK030	LG		[-]	**PF0623**	95,4×45×16,8	OK039
Cooper S ALL4	06/10→	135	184	LG		[o]	**PF0619**	131,5×64×18	OK030	LG		[-]	**PF0623**	95,4×45×16,8	OK039
Cooper SD	02/11→	100	136	LG		[o]	**PF0619**	131,5×64×18	OK030	LG		[-]	**PF0623**	95,4×45×16,8	OK039
Cooper SD	02/11→	105	143	LG		[o]	**PF0619**	131,5×64×18	OK030	LG		[-]	**PF0623**	95,4×45×16,8	OK039
Cooper SD ALL4	02/11→	105	143	LG		[o]	**PF0619**	131,5×64×18	OK030	LG		[-]	**PF0623**	95,4×45×16,8	OK039
One	06/10→	72	98	LG		[o]	**PF0619**	131,5×64×18	OK030	LG		[-]	**PF0623**	95,4×45×16,8	OK039
One D	06/10→	66	90	LG		[o]	**PF0619**	131,5×64×18	OK030	LG		[-]	**PF0623**	95,4×45×16,8	OK039
Paceman (R61)															
Cooper	05/13→	88	120	LG		[o]	**PF0619**	131,5×64×18	OK030	LG		[-]	**PF0623**	95,4×45×16,8	OK039
Cooper	04/12→	90	122	LG		[o]	**PF0619**	131,5×64×18	OK030	LG		[-]	**PF0623**	95,4×45×16,8	OK039
Cooper D 4x4	09/12→	82	112	LG		[o]	**PF0619**	131,5×64×18	OK030	LG		[-]	**PF0623**	95,4×45×16,8	OK039
Cooper D	09/12→	82	112	LG		[o]	**PF0619**	131,5×64×18	OK030	LG		[-]	**PF0623**	95,4×45×16,8	OK039
Cooper S	04/12→	135	184	LG		[o]	**PF0619**	131,5×64×18	OK030	LG		[-]	**PF0623**	95,4×45×16,8	OK039
Cooper S 4x4	04/12→	135	184	LG		[o]	**PF0619**	131,5×64×18	OK030	LG		[-]	**PF0623**	95,4×45×16,8	OK039
Cooper SD	10/12→	105	143	LG		[o]	**PF0619**	131,5×64×18	OK030	LG		[-]	**PF0623**	95,4×45×16,8	OK039
Cooper SD 4x4	10/12→	105	143	LG		[o]	**PF0619**	131,5×64×18	OK030	LG		[-]	**PF0623**	95,4×45×16,8	OK039
John Cooper Works	09/12→	160	218	LG		[o]	**PF0619**	131,5×64×18	OK030	LG		[-]	**PF0623**	95,4×45×16,8	OK039
Roadster (R59)															
Cooper S	02/12→	147	200	LG		[o]	**PF0147**	131,6×53,3×17,8	OK032/ OK063	LG		[-]	**PF0626**	95,5×39,2×17,2	OK039/ OK057/ OK064
Cooper S	02/12→	147	200							LG		[-]	**PF0626**	95,5×39,2×17,2	OK039/ OK057/ OK064
Cooper S	02/12→	120	163	LG		[o]	**PF0147**	131,6×53,3×17,8	OK032/ OK063	LG		[-]	**PF0626**	95,5×39,2×17,2	OK039/ OK057/ OK064
Cooper S	02/12→	120	163							LG		[-]	**PF0626**	95,5×39,2×17,2	OK039/ OK057/ OK064

		KW	CV	SiS	i	W.i.	MAGNETI MARELLI	W×H×Th (mm)	Extra kit [Opt]	SiS	i	W.i.	MAGNETI MARELLI	W×H×Th (mm)	Extra kit [Opt]
MINI (BMW)															
Cooper	02/12→	90	122	LG		[o]	**PF0147**	131,6×53,3×17,8	OK032/ OK063	LG		[-]	**PF0626**	95,5×39,2×17,2	OK039/ OK057/ OK064
Cooper	02/12→	90	122							LG		[-]	**PF0626**	95,5×39,2×17,2	OK039/ OK057/ OK064
Cooper S	02/12→	135	184	LG		[o]	**PF0147**	131,6×53,3×17,8	OK032/ OK063	LG		[-]	**PF0626**	95,5×39,2×17,2	OK039/ OK057/ OK064
Cooper S	02/12→	135	184							LG		[-]	**PF0626**	95,5×39,2×17,2	OK039/ OK057/ OK064
John Cooper Works	02/12→	155	211	LG		[o]	**PF0147**	131,6×53,3×17,8	OK032/ OK063	LG		[-]	**PF0626**	95,5×39,2×17,2	OK039/ OK057/ OK064
John Cooper Works	02/12→	155	211							LG		[-]	**PF0626**	95,5×39,2×17,2	OK039/ OK057/ OK064
Cooper SD	02/12→	105	143	LG		[o]	**PF0147**	131,6×53,3×17,8	OK032/ OK063	LG		[-]	**PF0626**	95,5×39,2×17,2	OK039/ OK057/ OK064
Cooper SD	02/12→	105	143							LG		[-]	**PF0626**	95,5×39,2×17,2	OK039/ OK057/ OK064
Cooper	02/12→	85	115	LG		[o]	**PF0147**	131,6×53,3×17,8	OK032/ OK063	LG		[-]	**PF0626**	95,5×39,2×17,2	OK039/ OK057/ OK064
Cooper	02/12→	85	115							LG		[-]	**PF0626**	95,5×39,2×17,2	OK039/ OK057/ OK064
Cooper SD	02/12→	100	136	LG		[o]	**PF0147**	131,6×53,3×17,8	OK032/ OK063	LG		[-]	**PF0626**	95,5×39,2×17,2	OK039/ OK057/ OK064
Cooper SD	02/12→	100	136							LG		[-]	**PF0626**	95,5×39,2×17,2	OK039/ OK057/ OK064
MITSUBISHI															
ASX (GA_W_)															
1.6	06/10→	86	117	ST		[+]	**PF0338**	144,9×54,9×15,6		AK		[+]	**PF0340**	91×44,8 ×15,4	
1.6	06/10→	86	117	ST		[+]	**PF0338**	144,9×54,9×15,6		AK	10/2012-	[+]	**PF0678**	101,5×44,4×14,3	
1.8	02/10→	102	139	ST		[+]	**PF0338**	144,9×54,9×15,6		AK		[+]	**PF0340**	91×44,8 ×15,4	
1.8	02/10→	102	139	ST		[+]	**PF0338**	144,9×54,9×15,6		AK	10/2012-	[+]	**PF0678**	101,5×44,4×14,3	
1.8 4WD	02/10→	102	139	ST		[+]	**PF0338**	144,9×54,9×15,6		AK		[+]	**PF0340**	91×44,8 ×15,4	
1.8 4WD	02/10→	102	139	ST		[+]	**PF0338**	144,9×54,9×15,6		AK	10/2012-	[+]	**PF0678**	101,5×44,4×14,3	

		KW	CV	SiS	i	W.i.	MAGNETI MARELLI	W×H×Th (mm)	Extra kit [Opt]	SiS	i	W.i.	MAGNETI MARELLI	W×H×Th (mm)	Extra kit [Opt]
MITSUBISHI															
ASX (GA_W_)															
1.8 DI-D	06/10 →	85	116	ST		[+]	**PF0338**	144,9×54,9×15,6		AK		[+]	**PF0340**	91×44,8 ×15,4	
1.8 DI-D	06/10 →	85	116	ST		[+]	**PF0338**	144,9×54,9×15,6		AK	10/2012-	[+]	**PF0678**	101,5×44,4×14,3	
1.8 DI-D	06/10 →	110	150	ST		[+]	**PF0338**	144,9×54,9×15,6		AK		[+]	**PF0340**	91×44,8 ×15,4	
1.8 DI-D	06/10 →	110	150	ST		[+]	**PF0338**	144,9×54,9×15,6		AK	10/2012-	[+]	**PF0678**	101,5×44,4×14,3	
1.8 DI-D 4WD	06/10 →	85	116	ST		[+]	**PF0338**	144,9×54,9×15,6		AK		[+]	**PF0340**	91×44,8 ×15,4	
1.8 DI-D 4WD	06/10 →	85	116	ST		[+]	**PF0338**	144,9×54,9×15,6		AK	10/2012-	[+]	**PF0678**	101,5×44,4×14,3	
1.8 DI-D 4WD	06/10 →	110	150	ST		[+]	**PF0338**	144,9×54,9×15,6		AK		[+]	**PF0340**	91×44,8 ×15,4	
1.8 DI-D 4WD	06/10 →	110	150	ST		[+]	**PF0338**	144,9×54,9×15,6		AK	10/2012-	[+]	**PF0678**	101,5×44,4×14,3	
2.0 i	06/10 →	110	150	ST		[+]	**PF0338**	144,9×54,9×15,6		AK		[+]	**PF0340**	91×44,8 ×15,4	
2.0 i	06/10 →	110	150	ST		[+]	**PF0338**	144,9×54,9×15,6		AK	10/2012-	[+]	**PF0678**	101,5×44,4×14,3	
2.0 Flex	06/10 →	110	150	ST		[+]	**PF0338**	144,9×54,9×15,6		AK		[+]	**PF0340**	91×44,8 ×15,4	
2.0 Flex	06/10 →	110	150	ST		[+]	**PF0338**	144,9×54,9×15,6		AK	10/2012-	[+]	**PF0678**	101,5×44,4×14,3	
2.0 i 4WD	06/10 →	110	150	ST		[+]	**PF0338**	144,9×54,9×15,6		AK		[+]	**PF0340**	91×44,8 ×15,4	
2.0 i 4WD	06/10 →	110	150	ST		[+]	**PF0338**	144,9×54,9×15,6		AK	10/2012-	[+]	**PF0678**	101,5×44,4×14,3	
Carisma (DA)															
1.6	95 →			LG	13"	[-]	**PF0520**	119×68,5×15,5	OK030						
1.6i 16V	95 →			LG	13"	[-]	**PF0520**	119×68,5×15,5	OK030						
1.6i GL	95 →			LG	14"	[+]	**PF0334**	130×72,6×15,5	OK012	LG		[+]	**PF0336**	87×47×16,5	OK030
1.8i	95 →			LG	13"	[-]	**PF0520**	119×68,5×15,5	OK030						
1.8i 16V Gdi Sedan	95 →			LG	14"	[+]	**PF0334**	130×72,6×15,5	OK012	LG		[+]	**PF0336**	87×47×16,5	OK030
1.8i 16V Gdi Sedan	95 →			LG	14"	[+]	**PF0334**	130×72,6×15,5	OK012						
1.8i GLX	95 →			LG	14"	[+]	**PF0334**	130×72,6×15,5	OK012	LG		[+]	**PF0336**	87×47×16,5	OK030
1.8 Gdi	97 →			LG	14"	[+]	**PF0334**	130×72,6×15,5	OK012						
1.9 TD	95 →			LG	13"	[-]	**PF0520**	119×68,5×15,5	OK030						
1.9 TD	95 →			LG	14"	[+]	**PF0334**	130×72,6×15,5	OK012	LG		[+]	**PF0336**	87×47×16,5	OK030
Colt I/II/III/IV/V															
1.3 H/Back GL	90 → 92			ST		[+]	**PF0333**	114,1×19,9×15							
1.3 12V H/ Back Gli	90 → 96			ST		[+]	**PF0333**	114,1×19,9×15							
1.3 12V H/ Back GLX	96 →			ST		[+]	**PF0333**	114,1×19,9×15							
1.5 H/Back GLX	92 → 96			ST		[+]	**PF0333**	114,1×19,9×15							
1.6 16V H/ Back GLX	92 →			ST		[+]	**PF0333**	114,1×19,9×15							
Colt VI (Z)															
1.0	06/04 →			LG		[+]	**PF0521**	130×72,6×17		LG		[+]	**PF0336**	87×47×16,5	OK030
1.0	06/04 →			LG	15"	[+]	**PF0335**	130×78,1×17,3	OK030	LG		[+]	**PF0336**	87×47×16,5	OK030
1.3	06/04 →			LG		[+]	**PF0521**	130×72,6×17		LG		[+]	**PF0336**	87×47×16,5	OK030
1.3	06/04 →			LG	15"	[+]	**PF0335**	130×78,1×17,3	OK030	LG		[+]	**PF0336**	87×47×16,5	OK030
1.5	06/04 →			LG		[+]	**PF0521**	130×72,6×17		LG		[+]	**PF0336**	87×47×16,5	OK030
1.5	06/04 →			LG	15"	[+]	**PF0335**	130×78,1×17,3	OK030	LG		[+]	**PF0336**	87×47×16,5	OK030

		KW	CV	SiS	i	W.i.	MAGNETI MARELLI	W×H×Th (mm)	Extra kit [Opt]	SiS	i	W.i.	MAGNETI MARELLI	W×H×Th (mm)	Extra kit [Opt]
MITSUBISHI															
1.5 Di-D	06/04 →		50	LG		[+]	**PF0521**	130×72,6×17		LG		[+]	**PF0336**	87×47×16,5	OK030
1.5 Di-D	06/04 →		50	LG	15"	[+]	**PF0335**	130×78,1×17,3	OK030	LG		[+]	**PF0336**	87×47×16,5	OK030
1.5 Di-D	06/04 →		70	LG		[+]	**PF0521**	130×72,6×17		LG		[+]	**PF0336**	87×47×16,5	OK030
1.5 Di-D	06/04 →		70	LG	15"	[+]	**PF0335**	130×78,1×17,3	OK030	LG		[+]	**PF0336**	87×47×16,5	OK030
1.5 CZT	03/05 →			LG	15"	[+]	**PF0335**	130×78,1×17,3	OK030	LG		[+]	**PF0336**	87×47×16,5	OK030
Colt CZC Cabriolet (RG)															
1.5	05/06 →	80	109	LG		[+]	**PF0335**	130×78,1×17,3	OK030	LG		[+]	**PF0336**	87×47×16,5	OK030
1.5 Turbo	05/06 →	110	150	LG		[+]	**PF0335**	130×78,1×17,3	OK030	LG		[+]	**PF0336**	87×47×16,5	OK030
Diamante															
2.0i	92 →			AK		[-]	**PF0339**	150×59×15,4							
2.5i	92 →			AK		[-]	**PF0339**	150×59×15,4							
3.0i	92 →			AK		[-]	**PF0339**	150×59×15,4							
Eclipse I (D2_A)															
2.0 i 16V 4x4	04/91 → 11/95	110	150	AK	(D22A, D27A)	[+]	**PF0339**	150×59×15,4							
Eclipse III (D5_A)															
2.4	05/99 → 03/05	110	150	ST		[+]	**PF0338**	144,9×54,9×15,6							
Galant Berlina VI (EA_)															
2.4 GDI	10/03 → 10/04	121	165	AK		[+]	**PF0339**	150×59×15,4							
2.4 GDI	02/99 → 09/00	110	150	AK	(EA3A)	[+]	**PF0339**	150×59×15,4							
Galant SW VI (EA_)															
2.0	09/96 → 09/00	100	136	AK	(EA2W)	[+]	**PF0339**	150×59×15,4							
2.0	09/00 → 10/03	98	133	AK	(EA2W)	[+]	**PF0339**	150×59×15,4							
2.0 TDI	09/96 → 10/03	66	90	AK	(EA6W)	[+]	**PF0339**	150×59×15,4							
2.4 GDI	02/99 → 09/00	110	150	AK	(EA3W)	[+]	**PF0339**	150×59×15,4							
2.4 GDI	09/00 → 10/03	106	144	AK	(EA3W)	[+]	**PF0339**	150×59×15,4							
2.5 V6 24V	09/96 → 09/00	120	163	AK	(EA5W)	[+]	**PF0339**	150×59×15,4							
2.5 V6 24V	09/00 → 10/03	118	160	AK	(EA5W)	[+]	**PF0339**	150×59×15,4							
2.8 TD	10/96 → 07/01	92	125	AK		[+]	**PF0339**	150×59×15,4							
Galloper (JK-01)															
2.5 TD	02/99 →	65	88	AK		[+]	**PF0282**	149×58,1×17		AK		[+]	**PF0340**	91×44,8 ×15,4	
2.5 TD intercooler	02/99 →	73	99	AK		[+]	**PF0282**	149×58,1×17		AK		[+]	**PF0340**	91×44,8 ×15,4	
3.0 V6	02/99 →	104	141	AK		[+]	**PF0282**	149×58,1×17		AK		[+]	**PF0340**	91×44,8 ×15,4	
Grandis (NA_W)															
2.0 DI-D	09/05 →	100	136	ST		[+]	**PF0342**	139,2×58,9×16,6		AK		[+]	**PF0340**	91×44,8 ×15,4	
2.0 DI-D	02/07 →	103	140	ST		[+]	**PF0342**	139,2×58,9×16,6		AK		[+]	**PF0340**	91×44,8 ×15,4	
2.4	04/04 →	121	165	ST		[+]	**PF0342**	139,2×58,9×16,6		AK		[+]	**PF0340**	91×44,8 ×15,4	
2.4	04/04 →	130	177	ST		[+]	**PF0342**	139,2×58,9×16,6		AK		[+]	**PF0340**	91×44,8 ×15,4	
Hunter															
2.4i	03/07 →			TOK		[+]	**PF0337**	155,4×51×16							
2.5 DiD	01/08 →			TOK		[+]	**PF0337**	155,4×51×16							
3.2 DI-D	07/06 → 12/09			TOK		[+]	**PF0337**	155,4×51×16							
3.5 i	07/06 → 12/09			TOK		[+]	**PF0337**	155,4×51×16							

		KW	CV	SiS	i	W.i.	MAGNETI MARELLI	W×H×Th (mm)	Extra kit [Opt]	SiS	i	W.i.	MAGNETI MARELLI	W×H×Th (mm)	Extra kit [Opt]
MITSUBISHI															
L200 (K_)															
2.0	96 → 99			AK	(K6T)	[+]	**PF0810**	137,8×55×15,7							
2.5 TD	96 → 99			AK	(K6T)	[+]	**PF0810**	137,8×55×15,7							
L200 II															
2.4	11/13 →	101	138	TOK	(KB_T, KA_T)	[+]	**PF0337**	155,4×51×16							
2.4 4x4	11/13 →	101	138	TOK	(KB_T, KA_T)	[+]	**PF0337**	155,4×51×16							
2.4 Flex	11/13 →	104	142	TOK	(KB_T, KA_T)	[+]	**PF0337**	155,4×51×16							
2.4 Flex 4x4	11/13 →	104	142	TOK	(KB_T, KA_T)	[+]	**PF0337**	155,4×51×16							
2.5 DiD	11/05 →			TOK	(KB_T, KA_T)	[+]	**PF0337**	155,4×51×16							
2.5 DI-D 4x4	04/10 →			TOK	(KB_T, KA_T)	[+]	**PF0337**	155,4×51×16							
3.2 DI-D 4x4	11/13 →	132	180	TOK	(KB_T, KA_T)	[+]	**PF0337**	155,4×51×16							
L400 Van (PAOV)															
1.6	02/80 → 10/02	51	69	AK		[+]	**PF0339**	150×59×15,4							
2.0	06/96 → 03/01	85	116	AK		[+]	**PF0339**	150×59×15,4							
2.0	06/96 → 10/02	83	113	AK		[+]	**PF0339**	150×59×15,4							
2.4	06/96 → 10/02	97	132	AK		[+]	**PF0339**	150×59×15,4							
2500 TD	09/96 →	64	87	AK	(PD5W, PD5V)	[+]	**PF0339**	150×59×15,4							
2500 TD 4x4	09/96 →	64	87	AK	(PD5W, PD5V)	[+]	**PF0339**	150×59×15,4							
L400 Bus (PAOV)															
2.0	09/95 → 10/02	83	113	AK	(PB3V, PA3W, PA3V)	[+]	**PF0339**	150×59×15,4							
2.4	06/96 → 10/02	97	132	AK		[+]	**PF0339**	150×59×15,4							
2500 TD	06/96 →	64	87	AK		[+]	**PF0339**	150×59×15,4							
Lancer VII Sedan															
1.3i	09/03 → 13			ST		[+]	**PF0338**	144,9×54,9×15,6		AK		[+]	**PF0285**	85,5×38,7×15,5	
1.6i	09/03 → 13			ST		[+]	**PF0338**	144,9×54,9×15,6		AK		[+]	**PF0285**	85,5×38,7×15,5	
2.0i	09/03 → 13			ST		[+]	**PF0338**	144,9×54,9×15,6		AK		[+]	**PF0285**	85,5×38,7×15,5	
Lancer VII SW															
1.3i	09/03 → 13			ST		[+]	**PF0338**	144,9×54,9×15,6		AK		[+]	**PF0285**	85,5×38,7×15,5	
1.6i	09/03 → 13			ST		[+]	**PF0338**	144,9×54,9×15,6		AK		[+]	**PF0285**	85,5×38,7×15,5	
2.0i	09/03 → 13			ST		[+]	**PF0338**	144,9×54,9×15,6		AK		[+]	**PF0285**	85,5×38,7×15,5	
Lancer VIII (CS_A)															
EVO 2.0 16V	03/04 →			BR		[-]	**PF0499**	131,8×77,3×15,8							
EVO 2.0 16V	01/06 →			BR		[-]	**PF0499**	131,8×77,3×15,8							

		KW	CV	SiS	i	W.i.	MAGNETI MARELLI	W×H×Th (mm)	Extra kit [Opt]	SiS	i	W.i.	MAGNETI MARELLI	W×H×Th (mm)	Extra kit [Opt]
MITSUBISHI															
Montero															
2.3 TD	91→			AK		[+]	PF0339	150×59×15,4		AK		[+]	PF0341	107,8×43,8×14,4	
2.4i GL/GLX	91→			AK		[+]	PF0339	150×59×15,4		AK		[+]	PF0341	107,8×43,8×14,4	
2.5 TD	91→			AK		[+]	PF0339	150×59×15,4		AK		[+]	PF0341	107,8×43,8×14,4	
3.0i V6 S.W LS	91→			AK		[+]	PF0339	150×59×15,4		AK		[+]	PF0341	107,8×43,8×14,4	
3.5i V6 SW SR	91→			AK	+AUT	[+]	PF0339	150×59×15,4		AK		[+]	PF0341	107,8×43,8×14,4	
Outlander I (CU_)															
2.0	05/03→07	100	136	AK	(CU2W)	[+]	PF0496	150×59×15,4		AK		[+]	PF0285	85,5×38,7×15,5	
2.0 4WD	05/03→07	177	241	AK		[+]	PF0496	150×59×15,4		AK		[+]	PF0285	85,5×38,7×15,5	
2.0 4WD	05/03→07	100	136	AK	(CU2W)	[+]	PF0496	150×59×15,4		AK		[+]	PF0285	85,5×38,7×15,5	
2.0 4WD	05/03→07	93	126	AK	(CU2W)	[+]	PF0496	150×59×15,4		AK		[+]	PF0285	85,5×38,7×15,5	
2.0 Turbo 4WD	04/04→07	148	201	AK	(CU2W)	[+]	PF0496	150×59×15,4		AK		[+]	PF0285	85,5×38,7×15,5	
2.4 4WD	05/03→07	102	139	AK		[+]	PF0496	150×59×15,4		AK		[+]	PF0285	85,5×38,7×15,5	
2.4 4WD	11/03→07	118	160	AK	(CU5W)	[+]	PF0496	150×59×15,4		AK		[+]	PF0285	85,5×38,7×15,5	
2.4 4WD	05/03→07	119	162	AK	(CU5W)	[+]	PF0496	150×59×15,4		AK		[+]	PF0285	85,5×38,7×15,5	
2.4 HDD Mivec	07/03→09/06	118	160	AK	(CU5W)	[+]	PF0496	150×59×15,4		AK		[+]	PF0285	85,5×38,7×15,5	
Outlander II (CW_W)															
2.0	11/06→	108	147	AK		[+]	PF0496	150×59×15,4		AK		[+]	PF0340	91×44,8 ×15,4	
2.0	06/09→	118	160	AK		[+]	PF0496	150×59×15,4		AK		[+]	PF0340	91×44,8 ×15,4	
2.0 DI-D	02/07→	103	140	AK		[+]	PF0496	150×59×15,4		AK		[+]	PF0340	91×44,8 ×15,4	
2.2 DI-D	11/06→	130	177	AK		[+]	PF0496	150×59×15,4		AK		[+]	PF0340	91×44,8 ×15,4	
2.2 DI-D 4WD	11/06→	130	177	AK		[+]	PF0496	150×59×15,4		AK		[+]	PF0340	91×44,8 ×15,4	
2.2 DI-D 4WD	09/10→	103	140	AK		[+]	PF0496	150×59×15,4		AK		[+]	PF0340	91×44,8 ×15,4	
2.2 DI-D 4WD	07/10→	130	177	AK		[+]	PF0496	150×59×15,4		AK		[+]	PF0340	91×44,8 ×15,4	
2.2 DI-D 4WD	08/07→	115	156	AK		[+]	PF0496	150×59×15,4		AK		[+]	PF0340	91×44,8 ×15,4	
2.4	11/06→	125	170	AK		[+]	PF0496	150×59×15,4		AK		[+]	PF0340	91×44,8 ×15,4	
2.4 Mivec 4WD	09/07→	125	170	AK		[+]	PF0496	150×59×15,4		AK		[+]	PF0340	91×44,8 ×15,4	
3.0 4x4	10/09→	177	241	AK		[+]	PF0496	150×59×15,4		AK		[+]	PF0340	91×44,8 ×15,4	
3.0 4x4	11/06→	162	220	AK		[+]	PF0496	150×59×15,4		AK		[+]	PF0340	91×44,8 ×15,4	
Outlander III (GF_W)															
2.0	10/12→	107	146	AK		[+]	PF0496	150×59×15,4		AK		[+]	PF0678	101,5×44,4×14,3	
2.0 4x4	10/12→	107	146	AK		[+]	PF0496	150×59×15,4		AK		[+]	PF0678	101,5×44,4×14,3	
2.0	08/12→	110	150	AK		[+]	PF0496	150×59×15,4		AK		[+]	PF0678	101,5×44,4×14,3	
2.0 4x4	08/12→	110	150	AK		[+]	PF0496	150×59×15,4		AK		[+]	PF0678	101,5×44,4×14,3	
2.4 4x4	10/12→	123	167	AK		[+]	PF0496	150×59×15,4		AK		[+]	PF0678	101,5×44,4×14,3	
2.2 Di-D	08/12→	110	150	AK		[+]	PF0496	150×59×15,4		AK		[+]	PF0678	101,5×44,4×14,3	
2.2 Di-D	08/12→	110	150	AK		[+]	PF0496	150×59×15,4		AK		[+]	PF0678	101,5×44,4×14,3	
Pajero II (V;W)															
1.8 GDi All-wheel Drive	11/97→08/99	96	131	AK		[+]	PF0339	150×59×15,4		AK		[+]	PF0341	107,8×43,8×14,4	
2.4	04/91→04/00	82	112	AK	(V21W, V21C)	[+]	PF0339	150×59×15,4		AK		[+]	PF0341	107,8×43,8×14,4	
2.5 TD 4x4	12/90→04/00	73	99	AK	(V24C, V24W)	[+]	PF0339	150×59×15,4		AK		[+]	PF0341	107,8×43,8×14,4	

		KW	CV													
				SiS	i	W.i.	MAGNETI MARELLI	W×H×Th (mm)	Extra kit [Opt]	SiS	i	W.i.	MAGNETI MARELLI	W×H×Th (mm)	Extra kit [Opt]
MITSUBISHI																
Pajero II (V;W)																
2.5 TDiC 2WD	03/91 → 08/99	73	99	AK	(V44W, V24W)	[+]	**PF0339**	150×59×15,4		AK		[+]	**PF0341**	107,8×43,8×14,4	
2.6 4x4	03/91 → 10/97	76	103	AK		[+]	**PF0339**	150×59×15,4		AK		[+]	**PF0341**	107,8×43,8×14,4	
2.6 4x4	05/91 → 10/93	79	107	AK		[+]	**PF0339**	150×59×15,4		AK		[+]	**PF0341**	107,8×43,8×14,4	
2.8 D All-wheel Drive	11/93 → 07/97	71	97	AK	(V46W, V26W)	[+]	**PF0339**	150×59×15,4		AK		[+]	**PF0341**	107,8×43,8×14,4	
2.8 TD	06/94 → 04/00	92	125	AK	(V46W)	[+]	**PF0339**	150×59×15,4		AK		[+]	**PF0341**	107,8×43,8×14,4	
3.0 V6 24V	06/94 → 05/97	133	181	AK	(V43W, V23W)	[+]	**PF0339**	150×59×15,4		AK		[+]	**PF0341**	107,8×43,8×14,4	
3.0 V6 24V	06/97 → 04/00	130	177	AK	(V43W, V23W)	[+]	**PF0339**	150×59×15,4		AK		[+]	**PF0341**	107,8×43,8×14,4	
3.0 V6 4x4	12/90 → 12/95	110	150	AK	(V23W, V43W, V23C)	[+]	**PF0339**	150×59×15,4		AK		[+]	**PF0341**	107,8×43,8×14,4	
3.5 V6 24V	06/94 → 04/00	153	208	AK	(V25W, V45W)	[+]	**PF0339**	150×59×15,4		AK		[+]	**PF0341**	107,8×43,8×14,4	
3.5 V6 24V	07/97 → 04/00	143	194	AK	(V45W, V25W)	[+]	**PF0339**	150×59×15,4		AK		[+]	**PF0341**	107,8×43,8×14,4	
Pajero II Open (V;W)																
1.8 GDI	06/98 → 04/00	96	131	AK		[+]	**PF0339**	150×59×15,4		AK		[+]	**PF0341**	107,8×43,8×14,4	
2.4	04/91 → 04/00	82	112	AK	(V41W, V21W, V21C)	[+]	**PF0339**	150×59×15,4		AK		[+]	**PF0341**	107,8×43,8×14,4	
2.5 TD	12/90 → 04/00	73	99	AK	(V24C, V24W)	[+]	**PF0339**	150×59×15,4		AK		[+]	**PF0341**	107,8×43,8×14,4	
2.5 TDiC 2WD	03/91 → 08/99	73	99	AK	(V24W, V24C)	[+]	**PF0339**	150×59×15,4		AK		[+]	**PF0341**	107,8×43,8×14,4	
3.0 V6	12/90 → 12/95	110	150	AK	(V23W, v43W, V23C)	[+]	**PF0339**	150×59×15,4		AK		[+]	**PF0341**	107,8×43,8×14,4	
3.0 V6 24V	06/94 → 04/00	133	181	AK	(V23W, V23C)	[+]	**PF0339**	150×59×15,4		AK		[+]	**PF0341**	107,8×43,8×14,4	
Pajero III B (V60, V70)																
2.4	10/01 →	82	112	ST		[+]	**PF0342**	139,2×58,9×16,6		AK		[+]	**PF0340**	91×44,8 ×15,4	
2.4 2WD	10/01 → 08/06	82	111	ST		[+]	**PF0342**	139,2×58,9×16,6		AK		[+]	**PF0340**	91×44,8 ×15,4	
2.4 4x4	10/01 →	82	112	ST		[+]	**PF0342**	139,2×58,9×16,6		AK		[+]	**PF0340**	91×44,8 ×15,4	
2.5 Tdi	04/00 →	73	99	ST	(V64W, V74W)	[+]	**PF0342**	139,2×58,9×16,6		AK		[+]	**PF0340**	91×44,8 ×15,4	
2.5 Tdi	09/01 →	85	115	ST	(V64W, V74W)	[+]	**PF0342**	139,2×58,9×16,6		AK		[+]	**PF0340**	91×44,8 ×15,4	
2.8 TD 4x4	05/00 → 07/02	92	125	ST		[+]	**PF0342**	139,2×58,9×16,6		AK		[+]	**PF0340**	91×44,8 ×15,4	
3.0	10/01 →	125	170	ST	(V73W)	[+]	**PF0342**	139,2×58,9×16,6		AK		[+]	**PF0340**	91×44,8 ×15,4	
3.2 D 4WD	04/08 →	121	167	ST	(V78W, V68W)	[+]	**PF0342**	139,2×58,9×16,6		AK		[+]	**PF0340**	91×44,8 ×15,4	

		KW	CV	SiS	i	W.i.	MAGNETI MARELLI	W×H×Th (mm)	Extra kit [Opt]	SiS	i	W.i.	MAGNETI MARELLI	W×H×Th (mm)	Extra kit [Opt]
MITSUBISHI															
Pajero III B (V60, V70)															
3.2 DI-D	04/00 → 10/01	121	165	ST	(V68W, V78W)	[+]	**PF0342**	139,2×58,9×16,6		AK		[+]	**PF0340**	91×44,8 ×15,4	
3.2 DI-D	10/01 →	118	160	ST	(V68W, V78W)	[+]	**PF0342**	139,2×58,9×16,6		AK		[+]	**PF0340**	91×44,8 ×15,4	
3.5 i 4x4	05/00 → 04/04	140	190	ST		[+]	**PF0342**	139,2×58,9×16,6		AK		[+]	**PF0340**	91×44,8 ×15,4	
3.5 V6 GDI	04/00 →	149	203	ST	(V65W, V75W)	[+]	**PF0342**	139,2×58,9×16,6		AK		[+]	**PF0340**	91×44,8 ×15,4	
3.8 i 4x4	09/03 → 10/06	149	203	ST		[+]	**PF0342**	139,2×58,9×16,6		AK		[+]	**PF0340**	91×44,8 ×15,4	
Pajero IV (V80-V90)															
3.0 4x4	02/07 →	131	178	ST		[+]	**PF0342**	139,2×58,9×16,6		AK		[+]	**PF0340**	91×44,8 ×15,4	
3.0 4x4	02/07 →	131	178	ST		[+]	**PF0409**	134,6×77,1×17		AK		[+]	**PF0340**	91×44,8 ×15,4	
3.2 DI-D	02/07 →	118	160	ST	(V88W, V98W)	[+]	**PF0342**	139,2×58,9×16,6		AK		[+]	**PF0340**	91×44,8 ×15,4	
3.2 DI-D	02/07 →	118	160	ST	(V88W, V98W)	[+]	**PF0409**	134,6×77,1×17		AK		[+]	**PF0340**	91×44,8 ×15,4	
3.2 DI-D	02/07 →	125	170	ST	(V88W, V98W)	[+]	**PF0342**	139,2×58,9×16,6		AK		[+]	**PF0340**	91×44,8 ×15,4	
3.2 DI-D	02/07 →	125	170	ST	(V88W, V98W)	[+]	**PF0409**	134,6×77,1×17		AK		[+]	**PF0340**	91×44,8 ×15,4	
3.2 DI-D	11/13 →	132	180	ST	(V8_W, V9_W)	[+]	**PF0342**	139,2×58,9×16,6		AK		[+]	**PF0340**	91×44,8 ×15,4	
3.2 DI-D	11/13 →	132	180	ST	(V8_W, V9_W)	[+]	**PF0409**	134,6×77,1×17		AK		[+]	**PF0340**	91×44,8 ×15,4	
3.2 DI-D 4x4	02/07 →	140	190	ST		[+]	**PF0342**	139,2×58,9×16,6		AK		[+]	**PF0340**	91×44,8 ×15,4	
3.2 DI-D 4x4	02/07 →	140	190	ST		[+]	**PF0409**	134,6×77,1×17		AK		[+]	**PF0340**	91×44,8 ×15,4	
3.2 TD 4x4	01/09 →	147	200	ST	(V98W, V88W)	[+]	**PF0342**	139,2×58,9×16,6		AK		[+]	**PF0340**	91×44,8 ×15,4	
3.2 TD 4x4	01/09 →	147	200	ST	(V98W, V88W)	[+]	**PF0409**	134,6×77,1×17		AK		[+]	**PF0340**	91×44,8 ×15,4	
3.5 4x4	11/13 →	147	200	ST	(V8_W, V9_W)	[+]	**PF0342**	139,2×58,9×16,6		AK		[+]	**PF0340**	91×44,8 ×15,4	
3.5 4x4	11/13 →	147	200	ST	(V8_W, V9_W)	[+]	**PF0409**	134,6×77,1×17		AK		[+]	**PF0340**	91×44,8 ×15,4	
3.5 Flex 4x4	11/13 →	151	205	ST	(V8_W, V9_W)	[+]	**PF0342**	139,2×58,9×16,6		AK		[+]	**PF0340**	91×44,8 ×15,4	
3.5 Flex 4x4	11/13 →	151	205	ST	(V8_W, V9_W)	[+]	**PF0409**	134,6×77,1×17		AK		[+]	**PF0340**	91×44,8 ×15,4	
3.8 i 4x4	01/09 →	175	238	ST	(V97W, V87W)	[+]	**PF0342**	139,2×58,9×16,6		AK		[+]	**PF0340**	91×44,8 ×15,4	
3.8 i 4x4	01/09 →	175	238	ST	(V97W, V87W)	[+]	**PF0409**	134,6×77,1×17		AK		[+]	**PF0340**	91×44,8 ×15,4	
3.8 V6	02/10 →	182	248	ST		[+]	**PF0342**	139,2×58,9×16,6		AK		[+]	**PF0340**	91×44,8 ×15,4	
3.8 V6	02/10 →	182	248	ST		[+]	**PF0409**	134,6×77,1×17		AK		[+]	**PF0340**	91×44,8 ×15,4	

		KW	CV	SiS	i	W.i.	MAGNETI MARELLI	W×H×Th (mm)	Extra kit [Opt]	SiS	i	W.i.	MAGNETI MARELLI	W×H×Th (mm)	Extra kit [Opt]
MITSUBISHI															
Pajero IV (V80-V90)															
3.8 V6	02/07 →	184	250	ST	(V87W, V97W)	[+]	**PF0342**	139,2×58,9×16,6		AK		[+]	**PF0340**	91×44,8 ×15,4	
3.8 V6	02/07 →	184	250	ST	(V87W, V97W)	[+]	**PF0409**	134,6×77,1×17		AK		[+]	**PF0340**	91×44,8 ×15,4	
Pajero Sport (K90)															
1.8 All-wheel Drive	03/01 → 02/05	84	114	AK		[+]	**PF0496**	150×59×15,4							
1.8 GDi All-wheel Drive	05/99 → 02/01	88	120	AK		[+]	**PF0496**	150×59×15,4							
2.0 GDi All-wheel Drive	10/01 → 02/05	95	129	AK		[+]	**PF0496**	150×59×15,4							
2.4 2WD	09/99 → 09/01	87	118	AK		[+]	**PF0496**	150×59×15,4							
2.4 2WD	10/01 → 08/06	82	111	AK		[+]	**PF0496**	150×59×15,4							
2.5 D All-wheel Drive	11/97 → 10/98	83	112	AK	(K94W)	[+]	**PF0496**	150×59×15,4							
2.5 TD	09/09 →	110	150	AK		[+]	**PF0496**	150×59×15,4							
2.5 TD	11/98 →	73	99	AK	(K94W)	[+]	**PF0496**	150×59×15,4							
2.5 TD	07/02 →	85	115	AK	(K94W)	[+]	**PF0496**	150×59×15,4							
2.5 TD	08/03 →	98	133	AK	(K94W)	[+]	**PF0496**	150×59×15,4							
2.8 TDi	11/98 →	87	118	AK		[+]	**PF0496**	150×59×15,4							
2.8 TDi	11/98 → 10/03	92	125	AK		[+]	**PF0496**	150×59×15,4							
3.0 V6	11/98 →	130	177	AK	(K96W)	[+]	**PF0496**	150×59×15,4							
3.0 V6	06/00 →	125	170	AK	(K96W)	[+]	**PF0496**	150×59×15,4							
3.0 V6	03/03 →	123	167	AK	(K96W)	[+]	**PF0496**	150×59×15,4							
3.2 TDi	11/98 →	121	165	AK		[+]	**PF0496**	150×59×15,4							
3.5	09/09 →	151	205	AK		[+]	**PF0496**	150×59×15,4							
3.5	11/98 →	149	203	AK		[+]	**PF0496**	150×59×15,4							
3.8 GDi	11/02 →	171	233	AK		[+]	**PF0496**	150×59×15,4							
Shogun															
2.5 TD	89 → 91									AK		[+]	**PF0341**	107,8×43,8×14,4	
2.5 TD	94 →			AK		[+]	**PF0339**	150×59×15,4		AK		[+]	**PF0341**	107,8×43,8×14,4	
2.5 TD Long	87 → 91									AK		[+]	**PF0341**	107,8×43,8×14,4	
2.5 TD Short	87 → 91									AK		[+]	**PF0341**	107,8×43,8×14,4	
2.6	87 → 91									AK		[+]	**PF0341**	107,8×43,8×14,4	
2.6 Short	84 → 91									AK		[+]	**PF0341**	107,8×43,8×14,4	
3.0i V6	94 →			AK		[+]	**PF0339**	150×59×15,4		AK		[+]	**PF0341**	107,8×43,8×14,4	
3.5i V6	94 →			AK		[+]	**PF0339**	150×59×15,4		AK		[+]	**PF0341**	107,8×43,8×14,4	
Shogun (V60)															
3.2 Di-D	04/00 →			ST		[+]	**PF0342**	139,2×58,9×16,6							
3.5 Gdi	04/00 →			ST		[+]	**PF0342**	139,2×58,9×16,6							
Sigma (F16A)															
3.0 V6	12/90 → 07/96	130	177	AK	(F16A)	[+]	**PF0339**	150×59×15,4		AK		[+]	**PF0341**	107,8×43,8×14,4	
3.0 V6	12/90 → 07/96	151	205	AK	(F16A)	[+]	**PF0339**	150×59×15,4		AK		[+]	**PF0341**	107,8×43,8×14,4	




KW	CV	SiS	i	W.i.	MAGNETI MARELLI	W×H×Th (mm)	Extra kit [Opt]	SiS	i	W.i.	MAGNETI MARELLI	W×H×Th (mm)	Extra kit [Opt]
MITSUBISHI													
Space Gear (PA/B/D_V/W)													
2.0 16V	05/95 → 05/00	85	115	AK	(PA3V/W, PB3V)	[+]	**PF0810**	137,8×55×15,7							
2.0 16V	08/96 → 05/00	83	113	AK	(PA3V/W, PB3V)	[+]	**PF0810**	137,8×55×15,7							
2.4 i	05/95 → 05/00	97	132	AK	(PA4W)	[+]	**PF0810**	137,8×55×15,7							
2.4 i 4x4	05/95 → 05/00	97	132	AK	(PD4V/W)	[+]	**PF0810**	137,8×55×15,7							
2.5 TD	05/95 → 05/00	64	87	AK	(PA5V/W, PB5V)	[+]	**PF0810**	137,8×55×15,7							
2.5 TD	05/95 → 05/00	73	99	AK	(PA5V/W, PB5V)	[+]	**PF0810**	137,8×55×15,7							
2.5 TD 4x4	05/95 → 05/00	73	99	AK	(PD5V/W)	[+]	**PF0810**	137,8×55×15,7							
Space Star (DG0)															
1.3 16V	06/98 →	63	86	LG	14"/(DG1A)	[+]	**PF0334**	130×72,6×15,5	OK012	LG		[+]	**PF0336**	87×47×16,5	OK030
1.3 16V	12/98 →	61	83	LG	(DG1A)	[+]	**PF0334**	130×72,6×15,5	OK012	LG		[+]	**PF0336**	87×47×16,5	OK030
1.3 16V	09/00 →	60	82	LG	(DG1A)	[+]	**PF0334**	130×72,6×15,5	OK012	LG		[+]	**PF0336**	87×47×16,5	OK030
1.6	04/01 → 03/06	72	98	LG		[+]	**PF0334**	130×72,6×15,5	OK012	LG		[+]	**PF0336**	87×47×16,5	OK030
1.6 16V	01/01 →	72	98	LG	(DG3A)	[+]	**PF0334**	130×72,6×15,5	OK012	LG		[+]	**PF0336**	87×47×16,5	OK030
1.8 GDI	06/98 →	90	122	LG	(DG5A)	[+]	**PF0334**	130×72,6×15,5	OK012	LG		[+]	**PF0336**	87×47×16,5	OK030
1.8 GDI	06/98 →	87	118	LG	(DG5A)	[+]	**PF0334**	130×72,6×15,5	OK012	LG		[+]	**PF0336**	87×47×16,5	OK030
1.8 MPI	10/02 →	82	112	LG		[+]	**PF0334**	130×72,6×15,5	OK012	LG		[+]	**PF0336**	87×47×16,5	OK030
1.9 DI-D	10/02 →	85	115	LG		[+]	**PF0334**	130×72,6×15,5	OK012	LG		[+]	**PF0336**	87×47×16,5	OK030
1.9 DI-D	02/01 →	75	102	LG	14"/(DG4A)	[+]	**PF0334**	130×72,6×15,5	OK012	LG		[+]	**PF0336**	87×47×16,5	OK030
Space Star (A0_)															
1.0	05/12 →	52	71	ST	12"	[+]	**PF0791**	122,1×43,4×15,3							
1.2	05/12 →	57	78	ST	12"	[+]	**PF0791**	122,1×43,4×15,3							
1.2	10/12 →	59	80	ST	12"	[+]	**PF0791**	122,1×43,4×15,3							
Space Runner II (N50)															
2.0	08/99 →	100	136	AK		[+]	**PF0339**	150×59×15,4							
2.0	08/99 →	100	136	ST		[+]	**PF0338**	144,9×54,9×15,6							
2.4 GDI	08/99 →	110	150	AK		[+]	**PF0339**	150×59×15,4							
2.4 GDI	08/99 →	110	150	ST		[+]	**PF0338**	144,9×54,9×15,6							
Space Wagon (N5_W)															
1.8	05/02 → 08/04	93	126	AK		[+]	**PF0496**	150×59×15,4							
2.0	12/98 → 06/02	80	109	AK		[+]	**PF0496**	150×59×15,4							
2.0 GDI	04/02 →	98	133	AK		[+]	**PF0496**	150×59×15,4							
2.4	11/98 → 04/04	96	131	AK		[+]	**PF0496**	150×59×15,4							
2.4 GDI	10/98 →	110	150	AK		[+]	**PF0496**	150×59×15,4							
2.4 GDI	09/00 →	108	147	AK		[+]	**PF0496**	150×59×15,4							
2.4 GDI 4x4	10/98 →	110	150	AK		[+]	**PF0496**	150×59×15,4							
2.4 GDI 4x4	09/00 →	108	147	AK		[+]	**PF0496**	150×59×15,4							
3.0 GDi 4x4	05/00 → 05/03	158	215	AK		[+]	**PF0496**	150×59×15,4							

		KW	CV	SiS	i	W.i.	MAGNETI MARELLI	W×H×Th (mm)	Extra kit [Opt]	SiS	i	W.i.	MAGNETI MARELLI	W×H×Th (mm)	Extra kit [Opt]
MITSUBISHI															
Triton															
2.4 i	03/07 →	97	132	TOK		[+]	**PF0337**	155,4×51×16							
2.5 DI-D 4x4	09/09 →	131	178	TOK		[+]	**PF0337**	155,4×51×16							
2.5 DiD	01/08 →	100	136	TOK		[+]	**PF0337**	155,4×51×16							
3.2 DI-D 4x4	07/06 → 12/09	118	160	TOK		[+]	**PF0337**	155,4×51×16							
3.5 i 4x4	07/06 → 12/09	135	184	TOK		[+]	**PF0337**	155,4×51×16							
NISSAN															
200 SX															
1.8i 16V T.	95 →			AK		[+]	**PF0343**	108,5×48×16		AK		[+]	**PF0519**	99,2×40×14,5	
2.0i	95 →			AK		[+]	**PF0343**	108,5×48×16		AK		[+]	**PF0519**	99,2×40×14,5	
2.0i 16V Coupé	95 →			AK		[+]	**PF0518**	108,5×48×16		AK		[+]	**PF0519**	99,2×40×14,5	
Almera															
1.4i 16V	95 → 00			AK	(N15)	[+]	**PF0343**	108,5×48×16		AK		[+]	**PF0519**	99,2×40×14,5	
1.4i 16V	96 → 00			AK	(N15)	[+]	**PF0518**	108,5×48×16		AK		[+]	**PF0519**	99,2×40×14,5	
1.5i 16V	00 → 06			LG	(N16)	[-]	**PF0344**	124,2×57,2×16,5		AK		[+]	**PF0519**	99,2×40×14,5	
1.5i 16V	00 → 06			LG	(N16)	[-]	**PF0344**	124,2×57,2×16,5		LG		[-]	**PF0345**	82,2×57×15,5	OK030
1.5 Dci	01/03 → 06			LG	(N16)	[-]	**PF0344**	124,2×57,2×16,5		LG		[-]	**PF0345**	82,2×57×15,5	OK030
1.6i 16V	95 → 00			AK	(N15)	[+]	**PF0343**	108,5×48×16		AK		[+]	**PF0519**	99,2×40×14,5	
1.6i 16V	96 → 00			AK	(N15)	[+]	**PF0518**	108,5×48×16		AK		[+]	**PF0519**	99,2×40×14,5	
1.8i 16V	00 → 06			LG	(N16)	[-]	**PF0344**	124,2×57,2×16,5		AK		[+]	**PF0519**	99,2×40×14,5	
1.8i 16V	00 → 06			LG	(N16)	[-]	**PF0344**	124,2×57,2×16,5		LG		[+]	**PF0345**	82,2×57×15,5	OK030
2.0 D	95 → 00			AK	(N15)	[+]	**PF0343**	108,5×48×16		AK		[+]	**PF0519**	99,2×40×14,5	
2.0 D	96 → 00			AK	(N15)	[+]	**PF0518**	108,5×48×16		AK		[+]	**PF0519**	99,2×40×14,5	
2.2 TDI 16V	00 → 06			LG	(N16)	[-]	**PF0344**	124,2×57,2×16,5		AK		[+]	**PF0519**	99,2×40×14,5	
2.2 TDI 16V	00 → 06			LG	(N16)	[-]	**PF0344**	124,2×57,2×16,5		AK		[+]	**PF0519**	99,2×40×14,5	
Almera Tino (V10)															
1.8	08/00 →	84	114	LG		[-]	**PF0566**	131,7×58,5×17,2	OK033	LG		[-]	**PF0345**	82,2×57×15,5	OK030
1.8	08/00 →	84	114	LG		[+]	**PF0567**	131,7×58,5×17,2	OK033	LG		[-]	**PF0345**	82,2×57×15,5	OK030
1.8	12/02 →	85	116	LG		[-]	**PF0566**	131,7×58,5×17,2	OK033	LG		[-]	**PF0345**	82,2×57×15,5	OK030
1.8	12/02 →	85	116	LG		[+]	**PF0567**	131,7×58,5×17,2	OK033	LG		[-]	**PF0345**	82,2×57×15,5	OK030
2.0	08/00 →	100	136	LG		[-]	**PF0566**	131,7×58,5×17,2	OK033	LG		[-]	**PF0345**	82,2×57×15,5	OK030
2.0	08/00 →	100	136	LG		[+]	**PF0567**	131,7×58,5×17,2	OK033	LG		[-]	**PF0345**	82,2×57×15,5	OK030
2.2 dCi	09/03 →	82	112	LG		[-]	**PF0566**	131,7×58,5×17,2	OK033	LG		[-]	**PF0345**	82,2×57×15,5	OK030
2.2 dCi	09/03 →	82	112	LG		[+]	**PF0567**	131,7×58,5×17,2	OK033	LG		[-]	**PF0345**	82,2×57×15,5	OK030
2.2 dCi	09/03 →	100	136	LG		[-]	**PF0566**	131,7×58,5×17,2	OK033	LG		[-]	**PF0345**	82,2×57×15,5	OK030
2.2 dCi	09/03 →	100	136	LG		[+]	**PF0567**	131,7×58,5×17,2	OK033	LG		[-]	**PF0345**	82,2×57×15,5	OK030
2.2 Di	08/00 →	84	115	LG		[-]	**PF0566**	131,7×58,5×17,2	OK033	LG		[-]	**PF0345**	82,2×57×15,5	OK030
2.2 Di	08/00 →	84	115	LG		[+]	**PF0567**	131,7×58,5×17,2	OK033	LG		[-]	**PF0345**	82,2×57×15,5	OK030
Atleon															
All types	09/00 →			BR		[+]	**PF0478**	164,8×68×20							
All types	09/00 →			BR		[+]	**PF0479**	164,8×68×20							

		KW	CV													
				SiS	i	W.i.	MAGNETI MARELLI	W×H×Th (mm)	Extra kit [Opt]	SiS	i	W.i.	MAGNETI MARELLI	W×H×Th (mm)	Extra kit [Opt]
NISSAN															
Cabstar E															
75.28	10/98→			BSC		[+]	**PF0557**	168,5×63,8×18,4	OK012						
90.32	10/98→			BSC		[+]	**PF0557**	168,5×63,8×18,4	OK012						
110.35	10/98→			BSC		[+]	**PF0557**	168,5×63,8×18,4	OK012						
110.45	10/98→			BSC		[+]	**PF0557**	168,5×63,8×18,4	OK012						
120.35	10/98→			BSC		[+]	**PF0557**	168,5×63,8×18,4	OK012						
120.45	10/98→			BSC		[+]	**PF0557**	168,5×63,8×18,4	OK012						
Cabstar Com.															
28.11	10/06→			BR		[+]	**PF0650**	163,2×67,1×20	OK060	BR		[+]	**PF0573**	109,7×49,6×20	OK014
35.13	10/06→			BR		[+]	**PF0650**	163,2×67,1×20	OK060	BR		[+]	**PF0573**	109,7×49,6×20	OK014
35.15	10/06→			BR		[+]	**PF0650**	163,2×67,1×20	OK060	BR		[+]	**PF0573**	109,7×49,6×20	OK014
45.13	10/06→			BR	4,5 ton.	[+]	**PF0479**	164,8×68×20							
45.15	10/06→			BR	4,5 ton.	[+]	**PF0479**	164,8×68×20							
Cube (Z12)															
1.5 dCi	03/10→12	81	110	AK		[+]	**PF0696**	137×53×16,8		AK		[+]	**PF0473**	105,5×38,2×13,7	
1.5 dCi	03/10→12	78	106	AK		[+]	**PF0696**	137×53×16,8		AK		[+]	**PF0473**	105,5×38,2×13,7	
1.6 16V	03/10→12	81	110	AK		[+]	**PF0696**	137×53×16,8		AK		[+]	**PF0473**	105,5×38,2×13,7	
Interstar															
1.9 dci	07/02→			LG		[-]	**PF0371**	145,1×62,5×18,2	OK012	LG		[-]	**PF0370**	94,9×57,4×17	OK032
1.9 dci	07/02→			BSC		[-]	**PF0366**	138,8×79,8×17,8		BSC		[-]	**PF0365**	115×51,3×16,8	OK033
2.2 dci	07/02→			LG		[-]	**PF0371**	145,1×62,5×18,2	OK012	LG		[-]	**PF0370**	94,9×57,4×17	OK032
2.2 dci	07/02→			BSC		[-]	**PF0366**	138,8×79,8×17,8		BSC		[-]	**PF0365**	115×51,3×16,8	OK033
2.5 dci	07/02→			LG		[-]	**PF0371**	145,1×62,5×18,2	OK012	LG		[-]	**PF0370**	94,9×57,4×17	OK032
2.5 dci	07/02→			BSC		[-]	**PF0366**	138,8×79,8×17,8		BSC		[-]	**PF0365**	115×51,3×16,8	OK033
2.5 dci	09/06→	88		LG		[-]	**PF0371**	145,1×62,5×18,2	OK012	LG		[-]	**PF0370**	94,9×57,4×17	OK032
2.5 dci	09/06→	88		BSC		[-]	**PF0366**	138,8×79,8×17,8		BSC		[-]	**PF0365**	115×51,3×16,8	OK033
2.5 dci	09/06→	107		LG		[-]	**PF0371**	145,1×62,5×18,2	OK012	LG		[-]	**PF0370**	94,9×57,4×17	OK032
2.5 dci	09/06→	107		BSC		[-]	**PF0366**	138,8×79,8×17,8		BSC		[-]	**PF0365**	115×51,3×16,8	OK033
140 dci	11/03→			LG		[-]	**PF0371**	145,1×62,5×18,2	OK012	LG		[-]	**PF0370**	94,9×57,4×17	OK032
140 dci	11/03→			BSC		[-]	**PF0366**	138,8×79,8×17,8		BSC		[-]	**PF0365**	115×51,3×16,8	OK033
Kubistar (X76)															
1.2	08/03→	44	60	BSC		[-]	**PF0200**	130,8×47,2×18	OK034						
1.2 16V	04/06→	55	75	BSC		[-]	**PF0200**	130,8×47,2×18	OK034						
1.5 dCi	08/03→	60	82	BSC		[-]	**PF0200**	130,8×47,2×18	OK034						
1.5 dCi	08/03→	48	65	BSC		[-]	**PF0200**	130,8×47,2×18	OK034						
1.5 dCi	08/03→	42	57	BSC		[-]	**PF0200**	130,8×47,2×18	OK034						
1.5 dCi	08/05→	45	61	BSC		[-]	**PF0200**	130,8×47,2×18	OK034						
1.5 dCi 70	04/06→	50	68	BSC		[-]	**PF0200**	130,8×47,2×18	OK034						
1.5 dCi 85	04/06→	62	85	BSC		[-]	**PF0200**	130,8×47,2×18	OK034						
1.6 16V	08/03→	70	95	BSC		[-]	**PF0200**	130,8×47,2×18	OK034						
Kubistar Van															
1.2	08/03→	44	60	BSC		[-]	**PF0200**	130,8×47,2×18	OK034						
1.2 16V	04/06→	55	75	BSC		[-]	**PF0200**	130,8×47,2×18	OK034						
1.5 dCi	08/05→	45	61	BSC		[-]	**PF0200**	130,8×47,2×18	OK034						
1.5 dCi	08/03→	48	65	BSC		[-]	**PF0200**	130,8×47,2×18	OK034						

		KW	CV	SiS	i	W.i.	MAGNETI MARELLI	W×H×Th (mm)	Extra kit [Opt]	SiS	i	W.i.	MAGNETI MARELLI	W×H×Th (mm)	Extra kit [Opt]
NISSAN															
Kubistar Van															
1.5 dCi	08/03 →	60	82	BSC		[-]	**PF0200**	130,8×47,2×18	OK034						
1.6 16V	08/03 →	70	95	BSC		[-]	**PF0200**	130,8×47,2×18	OK034						
Juke (F15)															
1.5 dCi	06/10 →	81	110	ST		[+]	**PF0696**	137×53×16,8		AK		[+]	**PF0350**	105,5×38,2×14,2	
1.6	06/10 →	86	117	ST		[+]	**PF0696**	137×53×16,8		AK		[+]	**PF0350**	105,5×38,2×14,2	
1.6 DIG-T	06/10 →	140	190	ST		[+]	**PF0696**	137×53×16,8		AK		[+]	**PF0350**	105,5×38,2×14,2	
1.6 DIG-T	06/10 →	140	190	ST	4x4	[+]	**PF0696**	137×53×16,8		AK		[+]	**PF0350**	105,5×38,2×14,2	
1.6 DIG-T NISMO	02/13 →	147	200	ST		[+]	**PF0696**	137×53×16,8		AK		[+]	**PF0350**	105,5×38,2×14,2	
1.6 DIG-T NISMO	02/13 →	147	200	ST	4x4	[+]	**PF0696**	137×53×16,8		AK		[+]	**PF0350**	105,5×38,2×14,2	
Latio															
1.5	11/04 →	80	109							AK		[+]	**PF0473**	105,5×38,2×13,7	
1.5 4x4	11/04 →	80	109							AK		[+]	**PF0473**	105,5×38,2×13,7	
1.6	03/07 →	81	110							AK		[+]	**PF0473**	105,5×38,2×13,7	
1.8	11/04 →	92	125							AK		[+]	**PF0473**	105,5×38,2×13,7	
1.8	03/07 →	92	125							AK		[+]	**PF0473**	105,5×38,2×13,7	
March															
1.0i 16V	92 →			AK		[-]	**PF0346**	120,8×45×15,5							
1.3i 16V	92 →			AK		[-]	**PF0346**	120,8×45×15,5							
Micra (K11)															
1.0i 16V	92 → 03			AK		[-]	**PF0346**	120,8×45×15,5							
1.3i 16V	92 → 03			AK		[-]	**PF0346**	120,8×45×15,5							
1.5 D	92 → 03			AK		[-]	**PF0346**	120,8×45×15,5							
Micra III (K12)															
1.0 16V	01/03 →	48	65	LG		[-]	**PF0347**	116,5×52,4×17	OK030/ OK058						
1.2 16V	01/03 →	59	80	LG		[-]	**PF0347**	116,5×52,4×17	OK030/ OK058						
1.2 16V	01/03 →	48	65	LG		[-]	**PF0347**	116,5×52,4×17	OK030/ OK058						
1.4 16V	01/03 →	65	88	LG		[-]	**PF0347**	116,5×52,4×17	OK030/ OK058						
1.5 dCi	01/03 →	48	65	LG		[-]	**PF0347**	116,5×52,4×17	OK030/ OK058						
1.5 dCi	09/03 →	60	82	LG		[-]	**PF0347**	116,5×52,4×17	OK030/ OK058						
1.5 dCi	06/05 →	50	68	LG		[-]	**PF0347**	116,5×52,4×17	OK030/ OK058						
1.5 dCi	06/05 →	63	86	LG		[-]	**PF0347**	116,5×52,4×17	OK030/ OK058						
160 SR	05/05 →	81	110	LG		[-]	**PF0347**	116,5×52,4×17	OK030/ OK058						

		KW	CV	SiS	i	W.i.	MAGNETI MARELLI	W×H×Th (mm)	Extra kit [Opt]	SiS	i	W.i.	MAGNETI MARELLI	W×H×Th (mm)	Extra kit [Opt]
NISSAN															
Micra C+C (K12)															
1.4 16V	08/05→	65	88	LG		[-]	**PF0347**	116,5×52,4×17	OK030/ OK058						
1.6 160 SR	08/05→	81	110	LG		[-]	**PF0347**	116,5×52,4×17	OK030/ OK058						
Micra IV (K13)															
1.0	02/11→	54	73	LG		[+]	**PF0594**	116,5×52,4×17							
1.2	05/10→	59	80	LG		[+]	**PF0594**	116,5×52,4×17							
1.2	05/10→	56	76	LG		[+]	**PF0594**	116,5×52,4×17							
1.2 DIG	04/11→	72	98	LG		[+]	**PF0594**	116,5×52,4×17							
1.5	01/11→	74	101	LG		[+]	**PF0594**	116,5×52,4×17							
1.5	11/10→	75	102	LG		[+]	**PF0594**	116,5×52,4×17							
1.5 D	01/11→	73	99	LG		[+]	**PF0594**	116,5×52,4×17							
1.6	01/12→	78	106	LG		[+]	**PF0594**	116,5×52,4×17							
1.6 Flex	02/11→	82	112	LG		[+]	**PF0594**	116,5×52,4×17							
Murano (Z50)															
3.5 4x4	03/05→	172	234							AK		[+]	**PF0473**	105,5×38,2×13,7	
Murano (Z51)															
2.5 4x4	01/10→	140	190	ST		[+]	**PF0683**	157,1×58,3×18		AK		[+]	**PF0473**	105,5×38,2×13,7	
2.5 4x4	01/10→	140	190							AK		[+]	**PF0473**	105,5×38,2×13,7	
3.5	11/07→	195	265	ST		[+]	**PF0683**	157,1×58,3×18		AK		[+]	**PF0473**	105,5×38,2×13,7	
3.5	11/07→	195	265							AK		[+]	**PF0473**	105,5×38,2×13,7	
3.5 4x4	10/08→	188	256	ST		[+]	**PF0683**	157,1×58,3×18		AK		[+]	**PF0473**	105,5×38,2×13,7	
3.5 4x4	10/08→	188	256							AK		[+]	**PF0473**	105,5×38,2×13,7	
3.5 4x4	11/07→	195	265	ST		[+]	**PF0683**	157,1×58,3×18		AK		[+]	**PF0473**	105,5×38,2×13,7	
3.5 4x4	11/07→	195	265							AK		[+]	**PF0473**	105,5×38,2×13,7	
Note (E11)															
1.4	03/06→	65	88	LG		[-]	**PF0347**	116,5×52,4×17	OK030/ OK058						
1.5 dCi	09/10→	66	90	LG		[-]	**PF0347**	116,5×52,4×17	OK030/ OK058						
1.5 dCi	03/06→	50	68	LG		[-]	**PF0347**	116,5×52,4×17	OK030/ OK058						
1.5 dCi	03/06→	63	86	LG		[-]	**PF0347**	116,5×52,4×17	OK030/ OK058						
1.5 dCi	07/08→	76	103	LG		[-]	**PF0347**	116,5×52,4×17	OK030/ OK058						
1.6	03/06→	81	110	LG		[-]	**PF0347**	116,5×52,4×17	OK030/ OK058						
Note															
1.2	06/13→	59	80	LG		[-]	**PF0347**	116,5×52,4×17	OK030						
1.2	06/13→	59	80	LG		[+]	**PF0594**	116,5×52,4×17							
1.2 DIG	06/13→	72	98	LG		[-]	**PF0347**	116,5×52,4×17	OK030						
1.2 DIG	06/13→	72	98	LG		[+]	**PF0594**	116,5×52,4×17							
1.5 dCi	06/13→	66	90	LG		[-]	**PF0347**	116,5×52,4×17	OK030						

		KW	CV	SiS	i	W.i.	MAGNETI MARELLI	W×H×Th (mm)	Extra kit [Opt]	SiS	i	W.i.	MAGNETI MARELLI	W×H×Th (mm)	Extra kit [Opt]
NISSAN															
Note															
1.5 dCi	06/13 →	66	90	LG		[+]	**PF0594**	116,5×52,4×17							
Pathfinder II (R50)															
2.4	09/99 → 02/02	87	118							AK		[+]	**PF0473**	105,5×38,2×13,7	
2.4	05/99 → 12/04	105	143							AK		[+]	**PF0473**	105,5×38,2×13,7	
2.7 TD 4WD	09/97 → 12/04	96	131							AK		[+]	**PF0473**	105,5×38,2×13,7	
2.8 TD All-wheel Drive	05/01 → 12/04	101	137							AK		[+]	**PF0473**	105,5×38,2×13,7	
3.2 TD 4WD	09/97 → 12/04	110	150							AK		[+]	**PF0473**	105,5×38,2×13,7	
3.3	05/99 → 12/04	125	170							AK		[+]	**PF0473**	105,5×38,2×13,7	
3.3 Turbo All-wheel Drive	05/99 → 12/04	154	209							AK		[+]	**PF0473**	105,5×38,2×13,7	
3.3 V6 4WD	09/97 → 12/04	125	170							AK		[+]	**PF0473**	105,5×38,2×13,7	
3.3 V6 4WD	03/98 → 10/00	110	150							AK		[+]	**PF0473**	105,5×38,2×13,7	
3.5 V6 4WD	11/00 → 12/04	162	220							AK		[+]	**PF0473**	105,5×38,2×13,7	
Pixo (UAO)															
1.0	06/09 →	50	68	ST		[+]	**PF0471**	108,7×45,4×16							
Prairie															
2.4 SLX /4WD	92 →			ST		[+]	**PF0467**	137×53×17							
2.4 SLX /4WD	92 →			ST		[+]	**PF0468**	137×54,3×17							
Praire Van															
2.4i	89 →			ST		[+]	**PF0467**	137×53×17							
2.4i	89 →			ST		[+]	**PF0468**	137×54,3×17							
Primastar (X83)															
2.0	02/03 →	88	120	LG		[-]	**PF0371**	145,1×62,5×18,2	OK012	LG		[-]	**PF0370**	94,9×57,4×17	OK032
dCi 100	09/02 →	74	100	LG		[-]	**PF0371**	145,1×62,5×18,2	OK012	LG		[-]	**PF0370**	94,9×57,4×17	OK032
dCi 115	09/08 →	84	114	LG		[-]	**PF0371**	145,1×62,5×18,2	OK012	LG		[-]	**PF0370**	94,9×57,4×17	OK032
dCi 120	09/06 →	84	114	LG		[-]	**PF0371**	145,1×62,5×18,2	OK012	LG		[-]	**PF0370**	94,9×57,4×17	OK032
dCi 140	07/03 →	99	135	LG		[-]	**PF0371**	145,1×62,5×18,2	OK012	LG		[-]	**PF0370**	94,9×57,4×17	OK032
dCi 150	09/06 →	107	145	LG		[-]	**PF0371**	145,1×62,5×18,2	OK012	LG		[-]	**PF0370**	94,9×57,4×17	OK032
dCi 80	09/02 →	60	82	LG		[-]	**PF0371**	145,1×62,5×18,2	OK012	LG		[-]	**PF0370**	94,9×57,4×17	OK032
dCi 90	09/06 →	66	90	LG		[-]	**PF0371**	145,1×62,5×18,2	OK012	LG		[-]	**PF0370**	94,9×57,4×17	OK032
Primastar Bus (X83)															
2.0	03/01 →	88	120	LG		[-]	**PF0371**	145,1×62,5×18,2	OK012	LG		[-]	**PF0370**	94,9×57,4×17	OK032
dCi 100	03/01 →	74	101	LG		[-]	**PF0371**	145,1×62,5×18,2	OK012	LG		[-]	**PF0370**	94,9×57,4×17	OK032
dCi 115	09/08 →	84	114	LG		[-]	**PF0371**	145,1×62,5×18,2	OK012	LG		[-]	**PF0370**	94,9×57,4×17	OK032
dCi 120	07/02 →	88	120	LG		[-]	**PF0371**	145,1×62,5×18,2	OK012	LG		[-]	**PF0370**	94,9×57,4×17	OK032
dCi 120	09/06 →	84	114	LG		[-]	**PF0371**	145,1×62,5×18,2	OK012	LG		[-]	**PF0370**	94,9×57,4×17	OK032
dCi 140	07/03 →	99	135	LG		[-]	**PF0371**	145,1×62,5×18,2	OK012	LG		[-]	**PF0370**	94,9×57,4×17	OK032
dCi 150	09/06 →	107	145	LG		[-]	**PF0371**	145,1×62,5×18,2	OK012	LG		[-]	**PF0370**	94,9×57,4×17	OK032
dCi 80	03/01 →	60	80	LG		[-]	**PF0371**	145,1×62,5×18,2	OK012	LG		[-]	**PF0370**	94,9×57,4×17	OK032
dCi 90	09/06 →	66	90	LG		[-]	**PF0371**	145,1×62,5×18,2	OK012	LG		[-]	**PF0370**	94,9×57,4×17	OK032

		KW	CV	SiS	i	W.i.	MAGNETI MARELLI	W×H×Th (mm)	Extra kit [Opt]	SiS	i	W.i.	MAGNETI MARELLI	W×H×Th (mm)	Extra kit [Opt]
NISSAN															
Primera (P10)(P11)															
1.6i 16V SW	90→96			ST	(P10)	[+]	**PF0467**	137×53×17							
1.6i 16V SW	90→96			ST	(P10)	[+]	**PF0468**	137×54,3×17							
1.6i 16V	97→99				(P11)					LG		[-]	**PF0345**	82,2×57×15,5	OK030
1.6i 16V (MK3) Berlina/SW	99→			LG		[-]	**PF0344**	124,2×57,2×16,5		LG		[-]	**PF0345**	82,2×57×15,5	OK030
1.8i 16V (MK3) Berlina/SW	99→			LG		[-]	**PF0344**	124,2×57,2×16,5		LG		[-]	**PF0345**	82,2×57×15,5	OK030
2.0 D SW	90→96			ST	(P10)	[+]	**PF0467**	137×53×17							
2.0 D SW	90→96			ST	(P10)	[+]	**PF0468**	137×54,3×17							
2.0 D	90→96				(P10)					LG		[-]	**PF0345**	82,2×57×15,5	OK030
2.0 TD	97→99				(P11)					LG		[-]	**PF0345**	82,2×57×15,5	OK030
2.0 TD	97→99			LG	(P11) 15"	[-]	**PF0344**	124,2×57,2×16,5		LG		[-]	**PF0345**	82,2×57×15,5	OK030
2.0i 16V GT / 4WD	90→96				(P10)					LG		[-]	**PF0345**	82,2×57×15,5	OK030
2.0i 16V SW	90→96			ST	(P10)	[+]	**PF0467**	137×53×17							
2.0i 16V SW	90→96			ST	(P10)	[+]	**PF0468**	137×54,3×17							
2.0i 16V	97→99				(P11)					LG		[-]	**PF0345**	82,2×57×15,5	OK030
2.0i 16V	97→99			LG	(P11) 15"	[-]	**PF0344**	124,2×57,2×16,5		LG		[-]	**PF0345**	82,2×57×15,5	OK030
2.0i 16V GT	97→99			LG	(P11)	[-]	**PF0344**	124,2×57,2×16,5		LG		[-]	**PF0345**	82,2×57×15,5	OK030
2.0i 16V (MK3) Berlina/SW	99→			LG		[-]	**PF0344**	124,2×57,2×16,5		LG		[-]	**PF0345**	82,2×57×15,5	OK030
2.0i 16V GT (MK3) Berlina/SW	99→			LG		[-]	**PF0344**	124,2×57,2×16,5		LG		[-]	**PF0345**	82,2×57×15,5	OK030
Primera Van (P10)(P11)															
1.6i	92→96			ST		[+]	**PF0467**	137×53×17							
1.6i	92→96			ST		[+]	**PF0468**	137×54,3×17							
2.0i	92→96			ST		[+]	**PF0467**	137×53×17							
2.0i	92→96			ST		[+]	**PF0468**	137×54,3×17							
2.0 D	92→96			ST		[+]	**PF0467**	137×53×17							
2.0 D	92→96			ST		[+]	**PF0468**	137×54,3×17							
Primera III Berlina (P12)															
1.6	03/02→	78	106	LG		[-]	**PF0566**	131,7×58,5×17,2	OK033	ATE		[-]	**PF0349**	123,1×52×16,4	
1.6	01/02→	80	109	LG		[-]	**PF0566**	131,7×58,5×17,2	OK033	ATE		[-]	**PF0349**	123,1×52×16,4	
1.8	03/02→	85	115	LG		[-]	**PF0566**	131,7×58,5×17,2	OK033	ATE		[-]	**PF0349**	123,1×52×16,4	
1.9 dCi	04/03→	88	120	LG		[-]	**PF0566**	131,7×58,5×17,2	OK033	ATE		[-]	**PF0349**	123,1×52×16,4	
1.9 dCi	08/02→	85	116	LG		[-]	**PF0566**	131,7×58,5×17,2	OK033	ATE		[-]	**PF0349**	123,1×52×16,4	
2.0	03/02→	103	140	LG		[-]	**PF0566**	131,7×58,5×17,2	OK033	ATE		[-]	**PF0349**	123,1×52×16,4	
2.2 dCi	04/03→	102	139	LG		[-]	**PF0566**	131,7×58,5×17,2	OK033	ATE		[-]	**PF0349**	123,1×52×16,4	
2.2 Di	03/02→	93	126	LG		[-]	**PF0566**	131,7×58,5×17,2	OK033	ATE		[-]	**PF0349**	123,1×52×16,4	
2.5	01/02→	125	170	LG		[-]	**PF0566**	131,7×58,5×17,2	OK033	ATE		[-]	**PF0349**	123,1×52×16,4	

		KW	CV	SiS	i	W.i.	MAGNETI MARELLI	W×H×Th (mm)	Extra kit [Opt]	SiS	i	W.i.	MAGNETI MARELLI	W×H×Th (mm)	Extra kit [Opt]		
NISSAN																	
Primera III SW (WP12)																	
1.6 Visia	01/02→	80	109	LG		[-]	**PF0566**	131,7×58,5×17,2	OK033	ATE		[-]	**PF0349**	123,1×52×16,4			
1.8	03/02→	85	115	LG		[-]	**PF0566**	131,7×58,5×17,2	OK033	ATE		[-]	**PF0349**	123,1×52×16,4			
1.9 dCi	04/03→	88	120	LG		[-]	**PF0566**	131,7×58,5×17,2	OK033	ATE		[-]	**PF0349**	123,1×52×16,4			
1.9 dCi	08/02→	85	116	LG		[-]	**PF0566**	131,7×58,5×17,2	OK033	ATE		[-]	**PF0349**	123,1×52×16,4			
2.0	03/02→	103	140	LG		[-]	**PF0566**	131,7×58,5×17,2	OK033	ATE		[-]	**PF0349**	123,1×52×16,4			
2.2 dCi	04/03→	102	139	LG		[-]	**PF0566**	131,7×58,5×17,2	OK033	ATE		[-]	**PF0349**	123,1×52×16,4			
2.2 Di	03/02→	93	126	LG		[-]	**PF0566**	131,7×58,5×17,2	OK033	ATE		[-]	**PF0349**	123,1×52×16,4			
2.5	01/02→	125	170	LG		[-]	**PF0566**	131,7×58,5×17,2	OK033	ATE		[-]	**PF0349**	123,1×52×16,4			
Primera III (P12)																	
1.6	07/02→	78	106	LG	Hatchback	[-]	**PF0566**	131,7×58,5×17,2	OK033	ATE		[-]	**PF0349**	123,1×52×16,4			
1.6	07/02→	80	109	LG	Hatchback	[-]	**PF0566**	131,7×58,5×17,2	OK033	ATE		[-]	**PF0349**	123,1×52×16,4			
1.8	07/02→	85	115	LG	Hatchback	[-]	**PF0566**	131,7×58,5×17,2	OK033	ATE		[-]	**PF0349**	123,1×52×16,4			
1.9 dCi	04/03→	88	120	LG	Hatchback	[-]	**PF0566**	131,7×58,5×17,2	OK033	ATE		[-]	**PF0349**	123,1×52×16,4			
1.9 dCi	08/02→	85	116	LG	Hatchback	[-]	**PF0566**	131,7×58,5×17,2	OK033	ATE		[-]	**PF0349**	123,1×52×16,4			
2.0	07/02→	103	140	LG	Hatchback	[-]	**PF0566**	131,7×58,5×17,2	OK033	ATE		[-]	**PF0349**	123,1×52×16,4			
2.2 dCi	04/03→	102	139	LG	Hatchback	[-]	**PF0566**	131,7×58,5×17,2	OK033	ATE		[-]	**PF0349**	123,1×52×16,4			
2.2 Di	07/02→	93	126	LG	Hatchback	[-]	**PF0566**	131,7×58,5×17,2	OK033	ATE		[-]	**PF0349**	123,1×52×16,4			
2.5	01/02→	125	170	LG	Hatchback	[-]	**PF0566**	131,7×58,5×17,2	OK033	ATE		[-]	**PF0349**	123,1×52×16,4			
Qashqai (J10, JJ10)																	
1.5 dCi	11/10→	81	110	ST		[-]	**PF0351**	142×59×17		AK		[+]	**PF0473**	105,5×38,2×13,7			
1.5 dCi	02/07→	78	106	ST		[-]	**PF0351**	142×59×17		AK		[+]	**PF0473**	105,5×38,2×13,7			
1.5 dCi	07/08→	76	103	ST		[-]	**PF0351**	142×59×17		AK		[+]	**PF0473**	105,5×38,2×13,7			
1.6	11/10→	86	117	ST		[-]	**PF0351**	142×59×17		AK		[+]	**PF0473**	105,5×38,2×13,7			
1.6	02/07→	84	114	ST		[-]	**PF0351**	142×59×17		AK		[+]	**PF0473**	105,5×38,2×13,7			
2.0	11/10→	104	141	ST		[-]	**PF0351**	142×59×17		AK		[+]	**PF0473**	105,5×38,2×13,7			
2.0	02/07→	103	140	ST		[-]	**PF0351**	142×59×17		AK		[+]	**PF0473**	105,5×38,2×13,7			
2.0 All-wheel Drive	11/10→	104	141	ST		[-]	**PF0351**	142×59×17		AK		[+]	**PF0473**	105,5×38,2×13,7			
2.0 All-wheel Drive	02/07→	103	140	ST		[-]	**PF0351**	142×59×17		AK		[+]	**PF0473**	105,5×38,2×13,7			
2.0 dCi	02/07→	110	150	ST		[-]	**PF0351**	142×59×17		AK		[+]	**PF0473**	105,5×38,2×13,7			
2.0 dCi All-wheel Drive	02/07→	110	150	ST		[-]	**PF0351**	142×59×17		AK		[+]	**PF0473**	105,5×38,2×13,7			
Qashqai II																	
1.2 DIG-T	01/14→	85	116	ST		[+]	**PF0811**	141.9×59,7×17,8									
1.5 dCi	01/14→	81	110	ST		[+]	**PF0811**	141.9×59,7×17,8									
1.6 dCi	01/14→	96	131	ST		[+]	**PF0811**	141.9×59,7×17,8									
1.6 dCi	01/14→	96	131	ST	4x4	[+]	**PF0811**	141.9×59,7×17,8									
Sentra																	
1.6	95→			AK		[+]	**PF0343**	108,5×48×16		AK		[+]	**PF0519**	99,2×40×14,5			
1.6	96→			AK		[+]	**PF0518**	108,5×48×16		AK		[+]	**PF0519**	99,2×40×14,5			





KW	CV	SiS	i	W.i.	MAGNETI MARELLI	W×H×Th (mm)	Extra kit [Opt]	SiS	i	W.i.	MAGNETI MARELLI	W×H×Th (mm)	Extra kit [Opt]
NISSAN													
Serena (C23M)													
1.6	10/94 → 08/00	75	102	LG		[-]	**PF0352**	145×55,6×15,7									
1.6 16V	02/93 →	71	97	LG		[-]	**PF0352**	145×55,6×15,7									
2.0 16V	11/92 →	93	126	LG		[-]	**PF0352**	145×55,6×15,7									
2.0 D	11/92 →	49	67	LG		[-]	**PF0352**	145×55,6×15,7									
2.3 D	01/95 →	55	75	LG		[-]	**PF0352**	145×55,6×15,7									
2.4	07/94 → 08/00	93	126	LG		[-]	**PF0352**	145×55,6×15,7									
Terrano II (R20)													
2.4 4WD	05/96 → 01/02	85	116	LG		[-]	**PF0352**	145×55,6×15,7									
2.4 4WD	05/96 →	87	118	LG		[-]	**PF0352**	145×55,6×15,7									
2.4 i 12V 4WD	02/93 → 06/96	91	124	LG		[-]	**PF0352**	145×55,6×15,7									
2.7 TD 4WD	02/93 → 01/02	74	101	LG		[-]	**PF0352**	145×55,6×15,7									
2.7 TDi 4WD	05/96 →	92	125	LG		[-]	**PF0352**	145×55,6×15,7									
3.0 Di 4WD	05/02 →	113	154	LG		[-]	**PF0352**	145×55,6×15,7									
3.0 DiTD 4WD	10/97 → 06/03	125	170	LG		[-]	**PF0352**	145×55,6×15,7									
3.2 TDi 4WD	10/92 → 10/97	110	150	LG		[-]	**PF0352**	145×55,6×15,7									
3.3	10/92 → 10/97	125	170	LG		[-]	**PF0352**	145×55,6×15,7									
3.3 4WD	10/92 → 10/97	125	170	LG		[-]	**PF0352**	145×55,6×15,7									
3.5 4WD	10/94 → 06/03	177	241	LG		[-]	**PF0352**	145×55,6×15,7									
Tiida (C11X)													
1.5 dCi	09/07 →	78	106	LG		[-]	**PF0347**	116,5×52,4×17	OK030/ OK058	LG		[-]	**PF0348**	87×53×16	OK039
1.5 dCi	09/07 →	78	106	ST		[+]	**PF0696**	137×53×16,8		ST		[+]	**PF0473**	105,5×38,2×13,7	
1.6	09/07 →	81	110	LG		[-]	**PF0347**	116,5×52,4×17	OK030/ OK058	LG		[-]	**PF0348**	87×53×16	OK039
1.6	09/07 →	81	110	ST		[+]	**PF0696**	137×53×16,8		ST		[+]	**PF0473**	105,5×38,2×13,7	
1.8	09/07 →	93	126	LG		[-]	**PF0347**	116,5×52,4×17	OK030/ OK058	LG		[-]	**PF0348**	87×53×16	OK039
1.8	09/07 →	93	126	ST		[+]	**PF0696**	137×53×16,8		ST		[+]	**PF0473**	105,5×38,2×13,7	
1.8 Flex	05/09 →	92	125	LG		[-]	**PF0347**	116,5×52,4×17	OK030/ OK058	LG		[-]	**PF0348**	87×53×16	OK039
1.8 Flex	05/09 →	92	125	ST		[+]	**PF0696**	137×53×16,8		ST		[+]	**PF0473**	105,5×38,2×13,7	
Tiida 3 volumi (SC11X)													
1.5 dCi	09/07 →	78	106	LG		[-]	**PF0347**	116,5×52,4×17	OK030/ OK058	LG		[-]	**PF0348**	87×53×16	OK039
1.5 dCi	09/07 →	78	106	ST		[+]	**PF0696**	137×53×16,8		ST		[+]	**PF0473**	105,5×38,2×13,7	
1.6	09/07 →	81	110	LG		[-]	**PF0347**	116,5×52,4×17	OK030/ OK058	LG		[-]	**PF0348**	87×53×16	OK039
1.6	09/07 →	81	110	ST		[+]	**PF0696**	137×53×16,8		ST		[+]	**PF0473**	105,5×38,2×13,7	
1.8	09/07 →	93	126	LG		[-]	**PF0347**	116,5×52,4×17	OK030/ OK058	LG		[-]	**PF0348**	87×53×16	OK039
1.8	09/07 →	93	126	ST		[+]	**PF0696**	137×53×16,8		ST		[+]	**PF0473**	105,5×38,2×13,7	
1.8 Flex	07/10 →	92	125	LG		[-]	**PF0347**	116,5×52,4×17	OK030/ OK058	LG		[-]	**PF0348**	87×53×16	OK039
1.8 Flex	07/10 →	92	125	ST		[+]	**PF0696**	137×53×16,8		ST		[+]	**PF0473**	105,5×38,2×13,7	

		KW	CV													
				SiS	i	W.i.	MAGNETI MARELLI	W×H×Th (mm)	Extra kit [Opt]	SiS	i	W.i.	MAGNETI MARELLI	W×H×Th (mm)	Extra kit [Opt]
NISSAN															
Vanette Cargo (HC23)															
1.6	09/94 → 05/01	75	102	LG		[-]	**PF0352**	145×55,6×15,7							
1.6 i	01/95 →	71	97	LG		[-]	**PF0352**	145×55,6×15,7							
2.0 D	01/95 →	49	67	LG		[-]	**PF0352**	145×55,6×15,7							
2.3 D	01/95 →	55	75	LG		[-]	**PF0352**	145×55,6×15,7							
1.6	09/94 → 05/01	75	102	LG		[-]	**PF0352**	145×55,6×15,7							
1.6 i	01/96 →	72	98	LG		[-]	**PF0352**	145×55,6×15,7							
2.0 D	01/96 →	49	67	LG		[-]	**PF0352**	145×55,6×15,7							
2.3 D	01/96 →	55	75	LG		[-]	**PF0352**	145×55,6×15,7							
X-Trail I (T30)															
2.0	07/01 →	103	140							AK		[-]	**PF0350**	105,5×38,2×14,2	
2.0	09/01 →	110	150							AK		[-]	**PF0350**	105,5×38,2×14,2	
2.0 4x4	07/01 →	103	140							AK		[-]	**PF0350**	105,5×38,2×14,2	
2.0 4x4	09/01 →	110	150							AK		[-]	**PF0350**	105,5×38,2×14,2	
2.0 4x4	06/01 →	206	280							AK		[-]	**PF0350**	105,5×38,2×14,2	
2.2 dCi	12/03 →	100	136							AK		[-]	**PF0350**	105,5×38,2×14,2	
2.2 DCi	10/04 →	84	114							AK		[-]	**PF0350**	105,5×38,2×14,2	
2.2 dCi 4x4	12/03 →	100	136							AK		[-]	**PF0350**	105,5×38,2×14,2	
2.2 DCi FWD	06/01 → 09/03	84	114							AK		[-]	**PF0350**	105,5×38,2×14,2	
2.2 Di 4x4	07/01 →	84	114							AK		[-]	**PF0350**	105,5×38,2×14,2	
2.5 4x4	01/03 →	121	165							AK		[-]	**PF0350**	105,5×38,2×14,2	
2.5 4x4	11/02 →	132	179							AK		[-]	**PF0350**	105,5×38,2×14,2	
X-Trail II (T31)															
2.0	06/07 →	104	141	ST		[-]	**PF0351**	142×59×17		AK		[-]	**PF0350**	105,5×38,2×14,2	
2.0	06/08 →	103	140	ST		[-]	**PF0351**	142×59×17		AK		[-]	**PF0350**	105,5×38,2×14,2	
2.0	03/07 →	104	141	ST	FWD	[-]	**PF0351**	142×59×17		AK		[-]	**PF0350**	105,5×38,2×14,2	
2.0	06/08 →	103	140	ST	FWD	[-]	**PF0351**	142×59×17		AK		[-]	**PF0350**	105,5×38,2×14,2	
2.0 dCi	06/07 →	127	173	ST		[-]	**PF0351**	142×59×17		AK		[-]	**PF0350**	105,5×38,2×14,2	
2.0 dCi	06/07 →	110	150	ST		[-]	**PF0351**	142×59×17		AK		[-]	**PF0350**	105,5×38,2×14,2	
2.0 dCi	06/07 →	110	150	ST	FWD	[-]	**PF0351**	142×59×17		AK		[-]	**PF0350**	105,5×38,2×14,2	
2.5	06/07 →	124	161	ST		[-]	**PF0351**	142×59×17		AK		[-]	**PF0350**	105,5×38,2×14,2	
2.5	09/07 → 12/13	127	173	ST		[-]	**PF0351**	142×59×17		AK		[-]	**PF0350**	105,5×38,2×14,2	
2.5	09/07 → 12/13	127	173	ST	4x4	[-]	**PF0351**	142×59×17		AK		[-]	**PF0350**	105,5×38,2×14,2	
X-Trail (T32)															
1.6 dCi	12/13 →	96	131	ST	7 Posti	[+]	**PF0812**	141.9×59,7×16,8							
1.6 dCi 4x4	12/13 →	96	131	ST	7 Posti	[+]	**PF0812**	141.9×59,7×16,8							
OPEL															
Adam															
1.0	07/13 →	50	68	BSC		[+]	**PF0559**	122,9×53,4×18	OK012						
1.2	10/12 →	51	69	BSC		[+]	**PF0559**	122,9×53,4×18	OK012						
1.2	07/13 →	69	94	BSC		[+]	**PF0559**	122,9×53,4×18	OK012						
1.4	10/12 →	64	87	BSC		[+]	**PF0559**	122,9×53,4×18	OK012						
1.4	10/12 →	74	101	BSC		[+]	**PF0559**	122,9×53,4×18	OK012						
1.4 LPG	07/13 →	64	87	BSC		[+]	**PF0559**	122,9×53,4×18	OK012						

		KW	CV	SiS	i	W.i.	MAGNETI MARELLI	W×H×Th (mm)	Extra kit [Opt]	SiS	i	W.i.	MAGNETI MARELLI	W×H×Th (mm)	Extra kit [Opt]
OPEL															
Agila I (H00)															
1.0	08/03→	44	60	BSC		[+]	**PF0548**	131×44,2×16							
1.0 12V	09/00→	43	58	BSC		[+]	**PF0548**	131×44,2×16							
1.2 16V	09/00→	55	75	BSC		[+]	**PF0548**	131×44,2×16							
1.2 16V Twinport	07/04→	59	80	BSC		[+]	**PF0548**	131×44,2×16							
1.3 CDTI	08/03→	51	70	BSC		[+]	**PF0548**	131×44,2×16							
Agila II (H08)															
1.0	09/07→	48	65	LG		[+]	**PF0353**	116,5×52,4×17	OK030						
1.0 LPG	01/10→	48	65	LG		[+]	**PF0353**	116,5×52,4×17	OK030						
1.2	11/10→	69	94	LG		[+]	**PF0353**	116,5×52,4×17	OK030						
1.2	09/07→	63	86	LG		[+]	**PF0353**	116,5×52,4×17	OK030						
1.2 LPG	09/07→	63	86	LG		[+]	**PF0353**	116,5×52,4×17	OK030						
1.3 CDTI	09/07→	55	75	LG		[+]	**PF0353**	116,5×52,4×17	OK030						
Ascona A															
1.2	78→81			DM		[-]	**PF0354**	100×59×15,6							
1.3	78→81			DM		[-]	**PF0354**	100×59×15,6							
1.6	78→81			DM		[-]	**PF0354**	100×59×15,6							
1.9	78→81			DM		[-]	**PF0354**	100×59×15,6							
2.0	78→81			DM		[-]	**PF0354**	100×59×15,6							
2.0 D	78→81			DM		[-]	**PF0354**	100×59×15,6							
Ascona C (81,86,87,88)															
1.3 N	09/81→08/86	44	60	DM		[-]	**PF0354**	100×59×15,6							
1.3 S	09/81→08/88	55	75	DM		[-]	**PF0354**	100×59×15,6							
1.6	09/81→09/87	55	75	DM		[-]	**PF0354**	100×59×15,6							
1.6	09/86→08/88	60	82	DM		[-]	**PF0354**	100×59×15,6							
1.6 D	03/82→08/88	40	54	DM		[-]	**PF0354**	100×59×15,6							
1.6 i	09/87→08/88	55	75	DM		[-]	**PF0354**	100×59×15,6							
1.6 i CAT	09/86→08/88	55	75	DM		[-]	**PF0354**	100×59×15,6							
1.6 S	09/81→08/86	66	90	DM		[-]	**PF0354**	100×59×15,6							
1.8	09/87→08/88	62	84	DM		[-]	**PF0354**	100×59×15,6							
1.8 E	01/85→08/86	74	100	DM		[-]	**PF0354**	100×59×15,6							
1.8 i	09/82→08/86	85	115	DM		[-]	**PF0354**	100×59×15,6							
2.0	09/81→08/83	81	110	DM		[-]	**PF0354**	100×59×15,6							
2.0 i	08/87→08/88	74	100	DM		[-]	**PF0354**	100×59×15,6							
2.0 i	09/86→08/88	85	115	DM		[-]	**PF0354**	100×59×15,6							
2.0 i CAT	09/86→08/88	85	116	DM		[-]	**PF0354**	100×59×15,6							
2.0 i GT	03/87→08/88	95	130	DM		[-]	**PF0354**	100×59×15,6							
Astra F															
1.4i	91→98			ATE		[-]	**PF0208**	140,1×48,4×16,5							
Caravan 1.4	91→98			ATE		[-]	**PF0208**	140,1×48,4×16,5							
1.6i	91→94			ATE		[-]	**PF0208**	140,1×48,4×16,5							
1.6i 16V	91→94			ATE		[-]	**PF0208**	140,1×48,4×16,5							
1.6i	94→98			ATE		[-]	**PF0205**	156,4×52,8×17							
1.6i 16V	94→98			ATE		[-]	**PF0205**	156,4×52,8×17							

		KW	CV													
				SiS	i	W.i.	MAGNETI MARELLI	W×H×Th (mm)	Extra kit [Opt]	SiS	i	W.i.	MAGNETI MARELLI	W×H×Th (mm)	Extra kit [Opt]
OPEL															
Astra F															
Caravan 1.6	91 → 98			ATE		[-]	**PF0208**	140,1×48,4×16,5							
1.7D - TD	92 → 98			ATE		[-]	**PF0208**	140,1×48,4×16,5							
1.7D - TD	95 → 98			ATE		[-]	**PF0205**	156,4×52,8×17							
Caravan 1.7 D	91 → 98			ATE		[-]	**PF0208**	140,1×48,4×16,5							
1.8i 16V	93 → 98			ATE		[-]	**PF0208**	140,1×48,4×16,5							
Caravan 1.8	91 → 98			ATE		[-]	**PF0208**	140,1×48,4×16,5							
2.0i GSI 16V	91 → 98									ATE		[-]	**PF0359**	61,7×57,5×15,5	
2.0i 16V GS	95 → 98			ATE		[-]	**PF0205**	156,4×52,8×17		ATE		[-]	**PF0359**	61,7×57,5×15,5	
2.0i 16V GS	95 → 98									ATE		[-]	**PF0359**	61,7×57,5×15,5	
Caravan 2.0	91 → 98									ATE		[-]	**PF0359**	61,7×57,5×15,5	
Astra G Berlina / SW															
1.2i 16V	98 → 04			ATE		[+]	**PF0355**	160×62,5×17		BSC	+8 molle/ springs	[+]	**PF0357**	104,8×42,7×16,5	OK034
1.2i 16V	06/01 → 04			ATE		[+]	**PF0355**	160×62,5×17		LG		[+]	**PF0356**	95,4×42,7×15	OK039/ OK069
1.2i 16V	07/01 → 04			ATE		[+]	**PF0355**	160×62,5×17		LG		[-]	**PF0358**	95,4×42,7×15	OK039/ OK069
1.4i 16V	98 → 04			ATE		[+]	**PF0355**	160×62,5×17		BSC	+8 molle/ springs	[+]	**PF0357**	104,8×42,7×16,5	OK034
1.6i 16V	98 → 04			ATE		[+]	**PF0355**	160×62,5×17		BSC	+8 molle/ springs	[+]	**PF0357**	104,8×42,7×16,5	OK034
1.6i 16V	06/01 → 04			ATE		[+]	**PF0355**	160×62,5×17		LG		[+]	**PF0356**	95,4×42,7×15	OK039/ OK069
1.6i 16V	07/01 → 04			ATE		[+]	**PF0355**	160×62,5×17		LG		[-]	**PF0358**	95,4×42,7×15	OK039/ OK069
1.6i 16V	98 → 04			ATE	+ABS	[+]	**PF0523**	155,4×71,5×19,5		BSC	+8 molle/ springs	[+]	**PF0357**	104,8×42,7×16,5	OK034
1.7 TD	98 → 04			ATE		[+]	**PF0355**	160×62,5×17		BSC	+8 molle/ springs	[+]	**PF0357**	104,8×42,7×16,5	OK034
1.7 DTI	06/01 → 04			ATE		[+]	**PF0355**	160×62,5×17		LG		[+]	**PF0356**	95,4×42,7×15	OK039/ OK069
1.7 DTI	07/01 → 04			ATE		[+]	**PF0355**	160×62,5×17		LG		[-]	**PF0358**	95,4×42,7×15	OK039/ OK069
1.7 16V TD	00 → 04			ATE		[+]	**PF0355**	160×62,5×17		BSC	+8 molle/ springs	[+]	**PF0357**	104,8×42,7×16,5	OK034
1.8i 16V	98 → 04			ATE		[+]	**PF0523**	155,4×71,5×19,5		BSC	+8 molle/ springs	[+]	**PF0357**	104,8×42,7×16,5	OK034
1.8i 16V	06/01 → 04			ATE		[+]	**PF0523**	155,4×71,5×19,5		LG		[+]	**PF0356**	95,4×42,7×15	OK039/ OK069
1.8i 16V	07/01 → 04			ATE		[+]	**PF0523**	155,4×71,5×19,5		LG		[-]	**PF0358**	95,4×42,7×15	OK039/ OK069
2.0i 16V	98 → 04			ATE	+ABS	[+]	**PF0523**	155,4×71,5×19,5		BSC	+8 molle/ springs	[+]	**PF0357**	104,8×42,7×16,5	OK034

		KW	CV	SiS	i	W.i.	MAGNETI MARELLI	W×H×Th (mm)	Extra kit [Opt]	SiS	i	W.i.	MAGNETI MARELLI	W×H×Th (mm)	Extra kit [Opt]
OPEL															
Astra G Berlina / SW															
2.0i 16V OPC	00 → 04	118		ATE		[+]	**PF0386**	156,4×74,2×20		BSC	+8 molle/ springs	[+]	**PF0357**	104,8×42,7×16,5	OK034
2.0 DI 16V	06/01 → 04			ATE		[+]	**PF0355**	160×62,5×17		LG		[+]	**PF0356**	95,4×42,7×15	OK039/ OK069
2.0 DI 16V	07/01 → 04			ATE		[+]	**PF0355**	160×62,5×17		LG		[-]	**PF0358**	95,4×42,7×15	OK039/ OK069
2.0 DTI 16V	06/01 → 04			ATE		[+]	**PF0523**	155,4×71,5×19,5		LG		[+]	**PF0356**	95,4×42,7×15	OK039/ OK069
2.0 DTI 16V	07/01 → 04			ATE		[+]	**PF0523**	155,4×71,5×19,5		LG		[-]	**PF0358**	95,4×42,7×15	OK039/ OK069
2.0 Di 16V	98 → 04			ATE		[+]	**PF0523**	155,4×71,5×19,5		BSC	+8 molle/ springs	[+]	**PF0357**	104,8×42,7×16,5	OK034
2.2i 16V	06/01 → 04			ATE		[+]	**PF0523**	155,4×71,5×19,5		LG		[+]	**PF0356**	95,4×42,7×15	OK039/ OK069
2.2i 16V	07/01 → 04			ATE		[+]	**PF0523**	155,4×71,5×19,5		LG		[-]	**PF0358**	95,4×42,7×15	OK039/ OK069
Astra G Cabriolet															
1.6	01/03 → 10/05	76	103	ATE		[+]	**PF0523**	155,4×71,5×19,5		BSC	+8 molle/ springs	[+]	**PF0357**	104,8×42,7×16,5	OK034
1.6 16V	03/01 → 10/05	74	101	ATE		[+]	**PF0523**	155,4×71,5×19,5		BSC	+8 molle/ springs	[+]	**PF0357**	104,8×42,7×16,5	OK034
1.8 16V	03/01 → 10/05	92	125	ATE		[+]	**PF0523**	155,4×71,5×19,5		BSC	+8 molle/ springs	[+]	**PF0357**	104,8×42,7×16,5	OK034
2.0 16V Turbo	11/02 → 10/05	147	200	ATE		[+]	**PF0523**	155,4×71,5×19,5		BSC	+8 molle/ springs	[+]	**PF0357**	104,8×42,7×16,5	OK034
2.0 OPC	03/02 → 10/05	141	192	ATE		[+]	**PF0523**	155,4×71,5×19,5		BSC	+8 molle/ springs	[+]	**PF0357**	104,8×42,7×16,5	OK034
2.2 16V	03/01 → 10/05	108	147	ATE		[+]	**PF0523**	155,4×71,5×19,5		BSC	+8 molle/ springs	[+]	**PF0357**	104,8×42,7×16,5	OK034
2.2 DTI	09/02 → 10/05	92	125	ATE		[+]	**PF0523**	155,4×71,5×19,5		BSC	+8 molle/ springs	[+]	**PF0357**	104,8×42,7×16,5	OK034
Astra G Coupé (F07_)															
1.6 16V	03/00 → 05/05	74	101	ATE		[+]	**PF0523**	155,4×71,5×19,5		BSC	+8 molle/ springs	[+]	**PF0357**	104,8×42,7×16,5	OK034
1.6 16V	03/00 → 05/05	76	103	ATE		[+]	**PF0523**	155,4×71,5×19,5		BSC	+8 molle/ springs	[+]	**PF0357**	104,8×42,7×16,5	OK034
1.8 16V	03/00 → 10/00	85	116	ATE		[+]	**PF0523**	155,4×71,5×19,5		BSC	+8 molle/ springs	[+]	**PF0357**	104,8×42,7×16,5	OK034
1.8 16V	09/00 → 05/05	92	125	ATE		[+]	**PF0523**	155,4×71,5×19,5		BSC	+8 molle/ springs	[+]	**PF0357**	104,8×42,7×16,5	OK034
2.0 16V Turbo	09/00 → 08/01	140	190	ATE		[+]	**PF0523**	155,4×71,5×19,5		BSC	+8 molle/ springs	[+]	**PF0357**	104,8×42,7×16,5	OK034
2.0 16V Turbo	08/01 → 05/05	141	192	ATE		[+]	**PF0523**	155,4×71,5×19,5		BSC	+8 molle/ springs	[+]	**PF0357**	104,8×42,7×16,5	OK034

MAGNETI MARELLI

		KW	CV	SiS	i	W.i.	MAGNETI MARELLI	W×H×Th (mm)	Extra kit [Opt]	SiS	i	W.i.	MAGNETI MARELLI	W×H×Th (mm)	Extra kit [Opt]
OPEL															
Astra G Coupé (F07_)															
2.0 16V Turbo	11/02 → 05/05	147	200	ATE		[+]	**PF0523**	155,4×71,5×19,5		BSC	+8 molle/ springs	[+]	**PF0357**	104,8×42,7×16,5	OK034
2.2 16V	09/00 → 05/05	108	147	ATE		[+]	**PF0523**	155,4×71,5×19,5		BSC	+8 molle/ springs	[+]	**PF0357**	104,8×42,7×16,5	OK034
2.2 DTI	09/02 → 05/05	92	125	ATE		[+]	**PF0523**	155,4×71,5×19,5		BSC	+8 molle/ springs	[+]	**PF0357**	104,8×42,7×16,5	OK034
Astra G Van															
1.6 16V	09/00 → 04			ATE		[+]	**PF0355**	160×62,5×17		LG		[+]	**PF0356**	95,4×42,7×15	OK039/ OK069
1.7 D	91 → 98			ATE		[-]	**PF0208**	140,1×48,4×16,5							
1.7 D	98 → 04			ATE		[+]	**PF0355**	160×62,5×17		LG		[+]	**PF0356**	95,4×42,7×15	OK039/ OK069
2.0 Di	08/98 → 04			ATE		[+]	**PF0355**	160×62,5×17		LG		[+]	**PF0356**	95,4×42,7×15	OK039/ OK069
2.0 Di	08/98 → 04			ATE		[+]	**PF0523**	155,4×71,5×19,5		LG		[+]	**PF0356**	95,4×42,7×15	OK039/ OK069
Astra H Berlina															
1.2	08/05 → 10	59	80	ATE		[+]	**PF0364**	155,1×69,7×20,5	OK056	LG		[-]	**PF0358**	95,4×42,7×15	OK039/ OK069
1.2	10/06 → 10	48	65	ATE		[+]	**PF0364**	155,1×69,7×20,5	OK056	LG		[-]	**PF0358**	95,4×42,7×15	OK039/ OK069
1.3 CDTI	08/05 → 10	66	90	ATE		[+]	**PF0364**	155,1×69,7×20,5	OK056	LG		[-]	**PF0358**	95,4×42,7×15	OK039/ OK069
1.4	04/04 → 10/04	55	75	ATE		[+]	**PF0364**	155,1×69,7×20,5	OK056	LG		[-]	**PF0358**	95,4×42,7×15	OK039/ OK069
1.4	03/04 → 10	66	90	ATE		[+]	**PF0364**	155,1×69,7×20,5	OK056	LG		[-]	**PF0358**	95,4×42,7×15	OK039/ OK069
1.4	04/04 → 10/04	59	80	ATE		[+]	**PF0364**	155,1×69,7×20,5	OK056	LG		[-]	**PF0358**	95,4×42,7×15	OK039/ OK069
1.4 LPG	08/09 → 10	66	90	ATE		[+]	**PF0364**	155,1×69,7×20,5	OK056	LG		[-]	**PF0358**	95,4×42,7×15	OK039/ OK069
1.6	03/04 → 10	77	105	ATE		[+]	**PF0364**	155,1×69,7×20,5	OK056	LG		[-]	**PF0358**	95,4×42,7×15	OK039/ OK069
1.6	12/06 → 10	85	116	ATE		[+]	**PF0364**	155,1×69,7×20,5	OK056	LG		[-]	**PF0358**	95,4×42,7×15	OK039/ OK069
1.6 CNG	11/05 → 10	69	94	ATE		[+]	**PF0364**	155,1×69,7×20,5	OK056	LG		[-]	**PF0358**	95,4×42,7×15	OK039/ OK069
1.6 Turbo	02/07 → 10	132	180	ATE		[+]	**PF0364**	155,1×69,7×20,5	OK056	LG		[-]	**PF0358**	95,4×42,7×15	OK039/ OK069
1.7 CDTI	03/04 → 10	59	80	ATE		[+]	**PF0364**	155,1×69,7×20,5	OK056	LG		[-]	**PF0358**	95,4×42,7×15	OK039/ OK069
1.7 CDTI	03/04 → 10	74	100	ATE		[+]	**PF0364**	155,1×69,7×20,5	OK056	LG		[-]	**PF0358**	95,4×42,7×15	OK039/ OK069

		KW	CV	SiS	i	W.i.	MAGNETI MARELLI	W×H×Th (mm)	Extra kit [Opt]	SiS	i	W.i.	MAGNETI MARELLI	W×H×Th (mm)	Extra kit [Opt]
OPEL															
Astra H Berlina															
1.7 CDTI	02/07 → 10	81	110	ATE		[+]	**PF0364**	155,1×69,7×20,5	OK056	LG		[-]	**PF0358**	95,4×42,7×15	OK039/ OK069
1.7 CDTI	02/07 → 10	92	125	ATE		[+]	**PF0364**	155,1×69,7×20,5	OK056	LG		[-]	**PF0358**	95,4×42,7×15	OK039/ OK069
1.8	03/04 → 10	92	125	ATE		[+]	**PF0364**	155,1×69,7×20,5	OK056	LG		[-]	**PF0358**	95,4×42,7×15	OK039/ OK069
1.8	01/06 → 10	103	140	ATE		[+]	**PF0364**	155,1×69,7×20,5	OK056	LG		[-]	**PF0358**	95,4×42,7×15	OK039/ OK069
1.9 CDTI	09/04 → 10	110	150	ATE		[+]	**PF0364**	155,1×69,7×20,5	OK056	LG		[-]	**PF0358**	95,4×42,7×15	OK039/ OK069
1.9 CDTI	06/04 → 10	88	120	ATE		[+]	**PF0364**	155,1×69,7×20,5	OK056	LG		[-]	**PF0358**	95,4×42,7×15	OK039/ OK069
1.9 CDTI	09/05 → 10	74	100	ATE		[+]	**PF0364**	155,1×69,7×20,5	OK056	LG		[-]	**PF0358**	95,4×42,7×15	OK039/ OK069
1.9 CDTI 16V	04/04 → 10	88	120	ATE		[+]	**PF0364**	155,1×69,7×20,5	OK056	LG		[-]	**PF0358**	95,4×42,7×15	OK039/ OK069
2.0 Turbo	03/04 → 10	125	170	ATE		[+]	**PF0364**	155,1×69,7×20,5	OK056	LG		[-]	**PF0358**	95,4×42,7×15	OK039/ OK069
2.0 Turbo	09/04 → 10	147	200	ATE		[+]	**PF0364**	155,1×69,7×20,5	OK056	LG		[-]	**PF0358**	95,4×42,7×15	OK039/ OK069
2.0 Turbo	03/05 → 10	177	240	ATE		[+]	**PF0364**	155,1×69,7×20,5	OK056	LG		[-]	**PF0358**	95,4×42,7×15	OK039/ OK069
Astra H SW															
1.3 CDTI	08/05 → 10	66	90	ATE		[+]	**PF0364**	155,1×69,7×20,5	OK056	LG		[-]	**PF0358**	95,4×42,7×15	OK039/ OK069
1.4	08/04 → 10	55	75	ATE		[+]	**PF0364**	155,1×69,7×20,5	OK056	LG		[-]	**PF0358**	95,4×42,7×15	OK039/ OK069
1.4	08/04 → 10	66	90	ATE		[+]	**PF0364**	155,1×69,7×20,5	OK056	LG		[-]	**PF0358**	95,4×42,7×15	OK039/ OK069
1.4 LPG	08/09 → 10	66	90	ATE		[+]	**PF0364**	155,1×69,7×20,5	OK056	LG		[-]	**PF0358**	95,4×42,7×15	OK039/ OK069
1.6	08/04 → 10	77	105	ATE		[+]	**PF0364**	155,1×69,7×20,5	OK056	LG		[-]	**PF0358**	95,4×42,7×15	OK039/ OK069
1.6	12/06 → 10	85	116	ATE		[+]	**PF0364**	155,1×69,7×20,5	OK056	LG		[-]	**PF0358**	95,4×42,7×15	OK039/ OK069
1.6 CNG	11/05 → 10	69	94	ATE		[+]	**PF0364**	155,1×69,7×20,5	OK056	LG		[-]	**PF0358**	95,4×42,7×15	OK039/ OK069
1.6 LPG	08/09 → 10	85	116	ATE		[+]	**PF0364**	155,1×69,7×20,5	OK056	LG		[-]	**PF0358**	95,4×42,7×15	OK039/ OK069
1.6 Turbo	02/07 → 10	132	180	ATE		[+]	**PF0364**	155,1×69,7×20,5	OK056	LG		[-]	**PF0358**	95,4×42,7×15	OK039/ OK069
1.7 CDTI	08/04 → 10	59	80	ATE		[+]	**PF0364**	155,1×69,7×20,5	OK056	LG		[-]	**PF0358**	95,4×42,7×15	OK039/ OK069

		KW	CV	SiS	i	W.i.	MAGNETI MARELLI	W×H×Th (mm)	Extra kit [Opt]	SiS	i	W.i.	MAGNETI MARELLI	W×H×Th (mm)	Extra kit [Opt]
OPEL															
Astra H SW															
1.7 CDTI	08/04 → 10	74	101	ATE		[+]	**PF0364**	155,1×69,7×20,5	OK056	LG		[-]	**PF0358**	95,4×42,7×15	OK039/ OK069
1.7 CDTI	02/07 → 10	81	110	ATE		[+]	**PF0364**	155,1×69,7×20,5	OK056	LG		[-]	**PF0358**	95,4×42,7×15	OK039/ OK069
1.7 CDTI	02/07 → 10	92	125	ATE		[+]	**PF0364**	155,1×69,7×20,5	OK056	LG		[-]	**PF0358**	95,4×42,7×15	OK039/ OK069
1.8	08/04 → 10	92	125	ATE		[+]	**PF0364**	155,1×69,7×20,5	OK056	LG		[-]	**PF0358**	95,4×42,7×15	OK039/ OK069
1.8	08/05 → 10	103	140	ATE		[+]	**PF0364**	155,1×69,7×20,5	OK056	LG		[-]	**PF0358**	95,4×42,7×15	OK039/ OK069
1.9 CDTI	09/04 → 10	110	150	ATE		[+]	**PF0364**	155,1×69,7×20,5	OK056	LG		[-]	**PF0358**	95,4×42,7×15	OK039/ OK069
1.9 CDTI	09/05 → 10	88	120	ATE		[+]	**PF0364**	155,1×69,7×20,5	OK056	LG		[-]	**PF0358**	95,4×42,7×15	OK039/ OK069
1.9 CDTI	09/05 → 10	74	100	ATE		[+]	**PF0364**	155,1×69,7×20,5	OK056	LG		[-]	**PF0358**	95,4×42,7×15	OK039/ OK069
1.9 CDTi	12/04 → 10	103	140	ATE		[+]	**PF0364**	155,1×69,7×20,5	OK056	LG		[-]	**PF0358**	95,4×42,7×15	OK039/ OK069
1.9 CDTI 16V	08/04 → 10	88	120	ATE		[+]	**PF0364**	155,1×69,7×20,5	OK056	LG		[-]	**PF0358**	95,4×42,7×15	OK039/ OK069
2.0 Turbo	08/04 → 10	125	170	ATE		[+]	**PF0364**	155,1×69,7×20,5	OK056	LG		[-]	**PF0358**	95,4×42,7×15	OK039/ OK069
2.0 Turbo	09/04 → 10	147	200	ATE		[+]	**PF0364**	155,1×69,7×20,5	OK056	LG		[-]	**PF0358**	95,4×42,7×15	OK039/ OK069
Astra H GTC															
1.2	10/06 →	48	65	ATE		[+]	**PF0364**	155,1×69,7×20,5	OK056	LG		[-]	**PF0358**	95,4×42,7×15	OK039/ OK069
1.2	08/05 →	59	80	ATE		[+]	**PF0364**	155,1×69,7×20,5	OK056	LG		[-]	**PF0358**	95,4×42,7×15	OK039/ OK069
1.3 CDTI	04/05 →	66	90	ATE		[+]	**PF0364**	155,1×69,7×20,5	OK056	LG		[-]	**PF0358**	95,4×42,7×15	OK039/ OK069
1.4	03/05 →	55	75	ATE		[+]	**PF0364**	155,1×69,7×20,5	OK056	LG		[-]	**PF0358**	95,4×42,7×15	OK039/ OK069
1.4	03/05 →	66	90	ATE		[+]	**PF0364**	155,1×69,7×20,5	OK056	LG		[-]	**PF0358**	95,4×42,7×15	OK039/ OK069
1.6	03/05 →	77	105	ATE		[+]	**PF0364**	155,1×69,7×20,5	OK056	LG		[-]	**PF0358**	95,4×42,7×15	OK039/ OK069
1.6	12/06 →	85	116	ATE		[+]	**PF0364**	155,1×69,7×20,5	OK056	LG		[-]	**PF0358**	95,4×42,7×15	OK039/ OK069
1.6 CNG	11/05 →	69	94	ATE		[+]	**PF0364**	155,1×69,7×20,5	OK056	LG		[-]	**PF0358**	95,4×42,7×15	OK039/ OK069
1.6 Turbo	02/07 →	132	180	ATE		[+]	**PF0364**	155,1×69,7×20,5	OK056	LG		[-]	**PF0358**	95,4×42,7×15	OK039/ OK069

		KW	CV	SiS	i	W.i.	MAGNETI MARELLI	W×H×Th (mm)	Extra kit [Opt]	SiS	i	W.i.	MAGNETI MARELLI	W×H×Th (mm)	Extra kit [Opt]
OPEL															
Astra H GTC															
1.7 CDTi	03/05→	74	101	ATE		[+]	**PF0364**	155,1×69,7×20,5	OK056	LG		[-]	**PF0358**	95,4×42,7×15	OK039/ OK069
1.7 CDTI	02/07→	81	110	ATE		[+]	**PF0364**	155,1×69,7×20,5	OK056	LG		[-]	**PF0358**	95,4×42,7×15	OK039/ OK069
1.7 CDTI	02/07→	92	125	ATE		[+]	**PF0364**	155,1×69,7×20,5	OK056	LG		[-]	**PF0358**	95,4×42,7×15	OK039/ OK069
1.7 CDTI	03/05→	59	80	ATE		[+]	**PF0364**	155,1×69,7×20,5	OK056	LG		[-]	**PF0358**	95,4×42,7×15	OK039/ OK069
1.8	03/05→	92	125	ATE		[+]	**PF0364**	155,1×69,7×20,5	OK056	LG		[-]	**PF0358**	95,4×42,7×15	OK039/ OK069
1.8	01/06→	103	140	ATE		[+]	**PF0364**	155,1×69,7×20,5	OK056	LG		[-]	**PF0358**	95,4×42,7×15	OK039/ OK069
1.9 CDTi	03/05→	110	150	ATE		[+]	**PF0364**	155,1×69,7×20,5	OK056	LG		[-]	**PF0358**	95,4×42,7×15	OK039/ OK069
1.9 CDTI	01/06→	74	101	ATE		[+]	**PF0364**	155,1×69,7×20,5	OK056	LG		[-]	**PF0358**	95,4×42,7×15	OK039/ OK069
1.9 CDTI	09/05→	88	120	ATE		[+]	**PF0364**	155,1×69,7×20,5	OK056	LG		[-]	**PF0358**	95,4×42,7×15	OK039/ OK069
1.9 CDTi 16V	03/05→	88	120	ATE		[+]	**PF0364**	155,1×69,7×20,5	OK056	LG		[-]	**PF0358**	95,4×42,7×15	OK039/ OK069
2.0 Turbo	03/05→	147	200	ATE		[+]	**PF0364**	155,1×69,7×20,5	OK056	LG		[-]	**PF0358**	95,4×42,7×15	OK039/ OK069
2.0 Turbo	03/05→	125	170	ATE		[+]	**PF0364**	155,1×69,7×20,5	OK056	LG		[-]	**PF0358**	95,4×42,7×15	OK039/ OK069
2.0 Turbo	08/05→	177	240	ATE		[+]	**PF0364**	155,1×69,7×20,5	OK056	LG		[-]	**PF0358**	95,4×42,7×15	OK039/ OK069
Astra H 3 Volumi/Berlina															
1.3 CDTi	02/07→	66	90	ATE		[+]	**PF0364**	155,1×69,7×20,5	OK056	LG		[-]	**PF0358**	95,4×42,7×15	OK039/ OK069
1.6	02/07→	85	116	ATE		[+]	**PF0364**	155,1×69,7×20,5	OK056	LG		[-]	**PF0358**	95,4×42,7×15	OK039/ OK069
1.7 CDTi	02/07→	74	101	ATE		[+]	**PF0364**	155,1×69,7×20,5	OK056	LG		[-]	**PF0358**	95,4×42,7×15	OK039/ OK069
1.7 CDTi	02/07→	81	110	ATE		[+]	**PF0364**	155,1×69,7×20,5	OK056	LG		[-]	**PF0358**	95,4×42,7×15	OK039/ OK069
1.8	02/07→	103	140	ATE		[+]	**PF0364**	155,1×69,7×20,5	OK056	LG		[-]	**PF0358**	95,4×42,7×15	OK039/ OK069
Astra H CC															
1.6	09/05→	77	105	ATE		[+]	**PF0364**	155,1×69,7×20,5	OK056	LG		[-]	**PF0358**	95,4×42,7×15	OK039/ OK069
1.6	12/06→	85	116	ATE		[+]	**PF0364**	155,1×69,7×20,5	OK056	LG		[-]	**PF0358**	95,4×42,7×15	OK039/ OK069
1.6 Turbo	02/07→	132	180	ATE		[+]	**PF0364**	155,1×69,7×20,5	OK056	LG		[-]	**PF0358**	95,4×42,7×15	OK039/ OK069

		KW	CV	SiS	i	W.i.	MAGNETI MARELLI	W×H×Th (mm)	Extra kit [Opt]	SiS	i	W.i.	MAGNETI MARELLI	W×H×Th (mm)	Extra kit [Opt]
OPEL															
Astra H CC															
1.8	09/05→	92	125	ATE		[+]	**PF0364**	155,1×69,7×20,5	OK056	LG		[-]	**PF0358**	95,4×42,7×15	OK039/ OK069
1.8	09/05→	103	140	ATE		[+]	**PF0364**	155,1×69,7×20,5	OK056	LG		[-]	**PF0358**	95,4×42,7×15	OK039/ OK069
1.9 CDTi	09/05→	110	150	ATE		[+]	**PF0364**	155,1×69,7×20,5	OK056	LG		[-]	**PF0358**	95,4×42,7×15	OK039/ OK069
2.0 Turbo	09/05→	125	170	ATE		[+]	**PF0364**	155,1×69,7×20,5	OK056	LG		[-]	**PF0358**	95,4×42,7×15	OK039/ OK069
2.0 Turbo	09/05→	147	200	ATE		[+]	**PF0364**	155,1×69,7×20,5	OK056	LG		[-]	**PF0358**	95,4×42,7×15	OK039/ OK069
Astra H Van															
1.3 CDTI	08/05→	66	90	ATE		[+]	**PF0364**	155,1×69,7×20,5	OK056	LG		[-]	**PF0358**	95,4×42,7×15	OK039/ OK069
1.7 CDTI	03/04→	74	101	ATE		[+]	**PF0364**	155,1×69,7×20,5	OK056	LG		[-]	**PF0358**	95,4×42,7×15	OK039/ OK069
1.7 CDTI	02/07→	81	110	ATE		[+]	**PF0364**	155,1×69,7×20,5	OK056	LG		[-]	**PF0358**	95,4×42,7×15	OK039/ OK069
1.7 CDTI	02/07→	92	125	ATE		[+]	**PF0364**	155,1×69,7×20,5	OK056	LG		[-]	**PF0358**	95,4×42,7×15	OK039/ OK069
1.9 CDTI	09/04→	110	150	ATE		[+]	**PF0364**	155,1×69,7×20,5	OK056	LG		[-]	**PF0358**	95,4×42,7×15	OK039/ OK069
1.9 CDTI	09/05→	88	120	ATE		[+]	**PF0364**	155,1×69,7×20,5	OK056	LG		[-]	**PF0358**	95,4×42,7×15	OK039/ OK069
1.9 CDTI 16V	08/04→	88	120	ATE		[+]	**PF0364**	155,1×69,7×20,5	OK056	LG		[-]	**PF0358**	95,4×42,7×15	OK039/ OK069
Astra J															
1.3 CDTI	12/09→	70	95	ATE	Ø Disc 276/15"	[+]	**PF0694**	148×60,3×18,8		LG		[+]	**PF0433**	116,6×42,7×16,2	
1.3 CDTI	12/09→	70	95	ATE	Ø disc 300/16"	[+]	**PF0424**	148×61,1×18,8		LG		[+]	**PF0433**	116,6×42,7×16,2	
1.4	12/09→	64	87	ATE	Ø Disc 276/15"	[+]	**PF0694**	148×60,3×18,8		LG		[+]	**PF0433**	116,6×42,7×16,2	
1.4	12/09→	64	87	ATE	Ø disc 300/16"	[+]	**PF0424**	148×61,1×18,8		LG		[+]	**PF0433**	116,6×42,7×16,2	
1.4	12/09→	74	100	ATE	Ø Disc 276/15"	[+]	**PF0694**	148×60,3×18,8		LG		[+]	**PF0433**	116,6×42,7×16,2	
1.4	12/09→	74	100	ATE	Ø disc 300/16"	[+]	**PF0424**	148×61,1×18,8		LG		[+]	**PF0433**	116,6×42,7×16,2	
1.4 Turbo	09→	88	120	ATE	Ø Disc 276/15"	[+]	**PF0694**	148×60,3×18,8		LG		[+]	**PF0433**	116,6×42,7×16,2	
1.4 Turbo	10/10→	88	120	ATE	Ø disc 300/16"	[+]	**PF0424**	148×61,1×18,8		LG		[+]	**PF0433**	116,6×42,7×16,2	
1.4 Turbo	12/09→	103	140	ATE	Ø Disc 276/15"	[+]	**PF0694**	148×60,3×18,8		LG		[+]	**PF0433**	116,6×42,7×16,2	

		KW	CV	SiS	i	W.i.	MAGNETI MARELLI	W×H×Th (mm)	Extra kit [Opt]	SiS	i	W.i.	MAGNETI MARELLI	W×H×Th (mm)	Extra kit [Opt]
OPEL															
Astra J															
1.4 Turbo	09→	103	140	ATE	Ø disc 300/16"	[+]	**PF0424**	148×61,1×18,8		LG		[+]	**PF0433**	116,6×42,7×16,2	
1.6	12/09→	85	115	ATE	Ø Disc 276/15"	[+]	**PF0694**	148×60,3×18,8		LG		[+]	**PF0433**	116,6×42,7×16,2	
1.6	12/09→	85	115	ATE	Ø disc 300/16"	[+]	**PF0424**	148×61,1×18,8		LG		[+]	**PF0433**	116,6×42,7×16,2	
1.6 Turbo	12/09→	132	180	ATE	Ø Disc 276/15"	[+]	**PF0694**	148×60,3×18,8		LG		[+]	**PF0433**	116,6×42,7×16,2	
1.6 Turbo	12/09→	132	180	ATE	Ø disc 300/16"	[+]	**PF0424**	148×61,1×18,8		LG		[+]	**PF0433**	116,6×42,7×16,2	
1.6 CDTi	01/14→	100	136	ATE	Ø Disc 276/15"	[+]	**PF0694**	148×60,3×18,8		LG		[+]	**PF0433**	116,6×42,7×16,2	
1.6 CDTi	01/14→	100	136	ATE	Ø disc 300/16"	[+]	**PF0424**	148×61,1×18,8		LG		[+]	**PF0433**	116,6×42,7×16,2	
1.7 CDTI	12/09→	81	110	ATE	Ø Disc 276/15"	[+]	**PF0694**	148×60,3×18,8		LG		[+]	**PF0433**	116,6×42,7×16,2	
1.7 CDTI	12/09→	81	110	ATE	Ø disc 300/16"	[+]	**PF0424**	148×61,1×18,8		LG		[+]	**PF0433**	116,6×42,7×16,2	
1.7 CDTI	12/09→	92	125	ATE	Ø Disc 276/15"	[+]	**PF0694**	148×60,3×18,8		LG		[+]	**PF0433**	116,6×42,7×16,2	
1.7 CDTI	12/09→	92	125	ATE	Ø disc 300/16"	[+]	**PF0424**	148×61,1×18,8		LG		[+]	**PF0433**	116,6×42,7×16,2	
2.0 CDTI	06/11→	121	165	ATE	Ø Disc 276/15"	[+]	**PF0694**	148×60,3×18,8		LG		[+]	**PF0433**	116,6×42,7×16,2	
2.0 CDTI	06/11→	121	165	ATE	Ø disc 300/16"	[+]	**PF0424**	148×61,1×18,8		LG		[+]	**PF0433**	116,6×42,7×16,2	
2.0 CDTI	12/09→	118	160	ATE	Ø Disc 276/15"	[+]	**PF0694**	148×60,3×18,8		LG		[+]	**PF0433**	116,6×42,7×16,2	
2.0 CDTI	12/09→	118	160	ATE	Ø disc 300/16"	[+]	**PF0424**	148×61,1×18,8		LG		[+]	**PF0433**	116,6×42,7×16,2	
Astra J GTC															
1.4	10/11→	74	101	ATE		[+]	**PF0424**	148×61,1×18,8		LG		[+]	**PF0433**	116,6×42,7×16,2	
1.4	10/11→	74	101	ATE	Ø Disc 276/15"	[+]	**PF0694**	148×60,3×18,8		LG		[+]	**PF0433**	116,6×42,7×16,2	
1.4	10/11→	88	120	ATE		[+]	**PF0424**	148×61,1×18,8		LG		[+]	**PF0433**	116,6×42,7×16,2	
1.4	10/11→	88	120	ATE	Ø Disc 276/15"	[+]	**PF0694**	148×60,3×18,8		LG		[+]	**PF0433**	116,6×42,7×16,2	
1.4	10/11→	103	140	ATE		[+]	**PF0424**	148×61,1×18,8		LG		[+]	**PF0433**	116,6×42,7×16,2	
1.4	10/11→	103	140	ATE	Ø Disc 276/15"	[+]	**PF0694**	148×60,3×18,8		LG		[+]	**PF0433**	116,6×42,7×16,2	
1.6	10/11→	132	180	ATE		[+]	**PF0424**	148×61,1×18,8		LG		[+]	**PF0433**	116,6×42,7×16,2	
1.6	10/11→	132	180	ATE	Ø Disc 276/15"	[+]	**PF0694**	148×60,3×18,8		LG		[+]	**PF0433**	116,6×42,7×16,2	
1.7 CDTI	10/11→	81	110	ATE		[+]	**PF0424**	148×61,1×18,8		LG		[+]	**PF0433**	116,6×42,7×16,2	

		KW	CV	SiS	i	W.i.	MAGNETI MARELLI	W×H×Th (mm)	Extra kit [Opt]	SiS	i	W.i.	MAGNETI MARELLI	W×H×Th (mm)	Extra kit [Opt]
OPEL															
Astra J GTC															
1.7 CDTI	10/11→	81	110	ATE	Ø Disc 276/15"	[+]	**PF0694**	148×60,3×18,8		LG		[+]	**PF0433**	116,6×42,7×16,2	
1.7 CDTI	10/11→	96	131	ATE		[+]	**PF0424**	148×61,1×18,8		LG		[+]	**PF0433**	116,6×42,7×16,2	
1.7 CDTI	10/11→	96	131	ATE	Ø Disc 276/15"	[+]	**PF0694**	148×60,3×18,8		LG		[+]	**PF0433**	116,6×42,7×16,2	
1.8	10/11→	103	140	ATE		[+]	**PF0424**	148×61,1×18,8		LG		[+]	**PF0433**	116,6×42,7×16,2	
1.8	10/11→	103	140	ATE	Ø Disc 276/15"	[+]	**PF0694**	148×60,3×18,8		LG		[+]	**PF0433**	116,6×42,7×16,2	
2.0	10/11→	121	165	ATE		[+]	**PF0424**	148×61,1×18,8		LG		[+]	**PF0433**	116,6×42,7×16,2	
2.0	10/11→	121	165	ATE	Ø Disc 276/15"	[+]	**PF0694**	148×60,3×18,8		LG		[+]	**PF0433**	116,6×42,7×16,2	
2.0 BiTurbo CDTI	10/12→	121	165	BR	POC JQ5/18"	[+]	**PF0502**	131,8×77,3×16,1		LG		[+]	**PF0433**	116,6×42,7×16,2	
Astra Sport Tourer J															
1.3 CDTI	10/10→	70	95	ATE	Ø Disc 276/15"	[+]	**PF0694**	148×60,3×18,8		LG		[+]	**PF0433**	116,6×42,7×16,2	
1.3 CDTI	10/10→	70	95	ATE	Ø disc 300/16"	[+]	**PF0424**	148×61,1×18,8		LG		[+]	**PF0433**	116,6×42,7×16,2	
1.4	10/10→	74	101	ATE	Ø Disc 276/15"	[+]	**PF0694**	148×60,3×18,8		LG		[+]	**PF0433**	116,6×42,7×16,2	
1.4	10/10→	74	101	ATE	Ø disc 300/16"	[+]	**PF0424**	148×61,1×18,8		LG		[+]	**PF0433**	116,6×42,7×16,2	
1.4 Turbo	10/10→	88	120	ATE	Ø Disc 276/15"	[+]	**PF0694**	148×60,3×18,8		LG		[+]	**PF0433**	116,6×42,7×16,2	
1.4 Turbo	10/10→	88	120	ATE	Ø disc 300/16"	[+]	**PF0424**	148×61,1×18,8		LG		[+]	**PF0433**	116,6×42,7×16,2	
1.4 Turbo	10/10→	103	140	ATE	Ø Disc 276/15"	[+]	**PF0694**	148×60,3×18,8		LG		[+]	**PF0433**	116,6×42,7×16,2	
1.4 Turbo	10/10→	103	140	ATE	Ø disc 300/16"	[+]	**PF0424**	148×61,1×18,8		LG		[+]	**PF0433**	116,6×42,7×16,2	
1.6	10/10→	85	116	ATE	Ø Disc 276/15"	[+]	**PF0694**	148×60,3×18,8		LG		[+]	**PF0433**	116,6×42,7×16,2	
1.6	10/10→	85	116	ATE	Ø disc 300/16"	[+]	**PF0424**	148×61,1×18,8		LG		[+]	**PF0433**	116,6×42,7×16,2	
1.6 Turbo	10/10→	132	180	ATE	Ø Disc 276/15"	[+]	**PF0694**	148×60,3×18,8		LG		[+]	**PF0433**	116,6×42,7×16,2	
1.6 Turbo	10/10→	132	180	ATE	Ø disc 300/16"	[+]	**PF0424**	148×61,1×18,8		LG		[+]	**PF0433**	116,6×42,7×16,2	
1.6 CDTi	01/14→	100	136	ATE	Ø Disc 276/15"	[+]	**PF0694**	148×60,3×18,8		LG		[+]	**PF0433**	116,6×42,7×16,2	
1.6 CDTi	01/14→	100	136	ATE	Ø disc 300/16"	[+]	**PF0424**	148×61,1×18,8		LG		[+]	**PF0433**	116,6×42,7×16,2	
1.7 CDTI	10/10→	81	110	ATE	Ø Disc 276/15"	[+]	**PF0694**	148×60,3×18,8		LG		[+]	**PF0433**	116,6×42,7×16,2	

		KW	CV	SiS	i	W.i.	MAGNETI MARELLI	W×H×Th (mm)	Extra kit [Opt]	SiS	i	W.i.	MAGNETI MARELLI	W×H×Th (mm)	Extra kit [Opt]
OPEL															
Astra Sport Tourer J															
1.7 CDTI	10/10→	81	110	ATE	Ø disc 300/16"	[+]	**PF0424**	148×61,1×18,8		LG		[+]	**PF0433**	116,6×42,7×16,2	
1.7 CDTI	10/10→	92	125	ATE	Ø Disc 276/15"	[+]	**PF0694**	148×60,3×18,8		LG		[+]	**PF0433**	116,6×42,7×16,2	
1.7 CDTI	10/10→	92	125	ATE	Ø disc 300/16"	[+]	**PF0424**	148×61,1×18,8		LG		[+]	**PF0433**	116,6×42,7×16,2	
1.7 CDTI	10/10→	92	125	ATE	Ø Disc 276/15"	[+]	**PF0694**	148×60,3×18,8		LG		[+]	**PF0433**	116,6×42,7×16,2	
1.7 CDTI	10/10→	92	125	ATE	Ø disc 300/16"	[+]	**PF0424**	148×61,1×18,8		LG		[+]	**PF0433**	116,6×42,7×16,2	
1.7 CDTI	10/10→	74	101	ATE	Ø Disc 276/15"	[+]	**PF0694**	148×60,3×18,8		LG		[+]	**PF0433**	116,6×42,7×16,2	
1.7 CDTI	10/10→	74	101	ATE	Ø disc 300/16"	[+]	**PF0424**	148×61,1×18,8		LG		[+]	**PF0433**	116,6×42,7×16,2	
2.0 CDTI	10/10→	118	160	ATE	Ø Disc 276/15"	[+]	**PF0694**	148×60,3×18,8		LG		[+]	**PF0433**	116,6×42,7×16,2	
2.0 CDTI	10/10→	118	160	ATE	Ø disc 300/16"	[+]	**PF0424**	148×61,1×18,8		LG		[+]	**PF0433**	116,6×42,7×16,2	
Astra J 3 Volumi															
1.4	06/12→	74	101	ATE	Ø disc 300/16"	[+]	**PF0424**	148×61,1×18,8		LG		[+]	**PF0433**	116,6×42,7×16,2	
1.4	06/12→	74	101	ATE	Ø Disc 276/15"	[+]	**PF0694**	148×60,3×18,8		LG		[+]	**PF0433**	116,6×42,7×16,2	
1.3 CDTI	06/12→	70	95	ATE	Ø disc 300/16"	[+]	**PF0424**	148×61,1×18,8		LG		[+]	**PF0433**	116,6×42,7×16,2	
1.3 CDTI	06/12→	70	95	ATE	Ø Disc 276/15"	[+]	**PF0694**	148×60,3×18,8		LG		[+]	**PF0433**	116,6×42,7×16,2	
1.4 Turbo	06/12→	88	120	ATE	Ø disc 300/16"	[+]	**PF0424**	148×61,1×18,8		LG		[+]	**PF0433**	116,6×42,7×16,2	
1.4 Turbo	06/12→	88	120	ATE	Ø Disc 276/15"	[+]	**PF0694**	148×60,3×18,8		LG		[+]	**PF0433**	116,6×42,7×16,2	
1.4 Turbo	06/12→	103	140	ATE	Ø disc 300/16"	[+]	**PF0424**	148×61,1×18,8		LG		[+]	**PF0433**	116,6×42,7×16,2	
1.4 Turbo	06/12→	103	140	ATE	Ø Disc 276/15"	[+]	**PF0694**	148×60,3×18,8		LG		[+]	**PF0433**	116,6×42,7×16,2	
1.6 SIDI	06/12→	125	170	ATE	Ø disc 300/16"	[+]	**PF0424**	148×61,1×18,8		LG		[+]	**PF0433**	116,6×42,7×16,2	
1.6 SIDI	06/12→	125	170	ATE	Ø Disc 276/15"	[+]	**PF0694**	148×60,3×18,8		LG		[+]	**PF0433**	116,6×42,7×16,2	
1.6 Turbo	06/12→	85	116	ATE	Ø disc 300/16"	[+]	**PF0424**	148×61,1×18,8		LG		[+]	**PF0433**	116,6×42,7×16,2	
1.6 Turbo	06/12→	85	116	ATE	Ø Disc 276/15"	[+]	**PF0694**	148×60,3×18,8		LG		[+]	**PF0433**	116,6×42,7×16,2	

		KW	CV	SiS	i	W.i.	MAGNETI MARELLI	W×H×Th (mm)	Extra kit [Opt]	SiS	i	W.i.	MAGNETI MARELLI	W×H×Th (mm)	Extra kit [Opt]
OPEL															
Astra J 3 Volumi															
1.6 Turbo	06/12 →	132	180	ATE	Ø disc 300/16"	[+]	**PF0424**	148×61,1×18,8		LG		[+]	**PF0433**	116,6×42,7×16,2	
1.6 Turbo	06/12 →	132	180	ATE	Ø Disc 276/15"	[+]	**PF0694**	148×60,3×18,8		LG		[+]	**PF0433**	116,6×42,7×16,2	
1.6 CDTi	01/14 →	100	136	ATE	Ø disc 300/16"	[+]	**PF0424**	148×61,1×18,8		LG		[+]	**PF0433**	116,6×42,7×16,2	
1.6 CDTi	01/14 →	100	136	ATE	Ø Disc 276/15"	[+]	**PF0694**	148×60,3×18,8		LG		[+]	**PF0433**	116,6×42,7×16,2	
1.7 CDTI	06/12 →	81	110	ATE	Ø disc 300/16"	[+]	**PF0424**	148×61,1×18,8		LG		[+]	**PF0433**	116,6×42,7×16,2	
1.7 CDTI	06/12 →	81	110	ATE	Ø Disc 276/15"	[+]	**PF0694**	148×60,3×18,8		LG		[+]	**PF0433**	116,6×42,7×16,2	
1.7 CDTI	06/12 →	96	131	ATE	Ø disc 300/16"	[+]	**PF0424**	148×61,1×18,8		LG		[+]	**PF0433**	116,6×42,7×16,2	
1.7 CDTI	06/12 →	96	131	ATE	Ø Disc 276/15"	[+]	**PF0694**	148×60,3×18,8		LG		[+]	**PF0433**	116,6×42,7×16,2	
Calibra															
2.0i 8V	90 → 97									ATE		[-]	**PF0359**	61,7×57,5×15,5	
2.0i 16V	90 →									ATE		[-]	**PF0359**	61,7×57,5×15,5	
2.0i 16V 4WD	95 →			ATE		[-]	**PF0205**	156,4×52,8×17		ATE		[-]	**PF0359**	61,7×57,5×15,5	
2.0i 16V 4WD	95 →									ATE		[-]	**PF0359**	61,7×57,5×15,5	
2.0i 16V 4WD	90 →									ATE		[-]	**PF0359**	61,7×57,5×15,5	
2.0i 16V T. 4WD	09/95 → 07/97			ATE		[-]	**PF0360**	156,4×74,2×20							
2.5 V6 24V	09/95 → 07/97			ATE		[-]	**PF0360**	156,4×74,2×20							
Cascada (W13)															
1.4	03/13 →	88	120	MN		[+]	**PF0724**	142×66,7×18,8		LG		[+]	**PF0433**	116,6×42,7×16,2	
1.4 Turbo	03/13 →	103	140	MN		[+]	**PF0724**	142×66,7×18,8		LG		[+]	**PF0433**	116,6×42,7×16,2	
1.6 SIDI	03/13 →	125	170	MN		[+]	**PF0724**	142×66,7×18,8		LG		[+]	**PF0433**	116,6×42,7×16,2	
2.0 CDTI	03/13 →	121	165	MN		[+]	**PF0724**	142×66,7×18,8		LG		[+]	**PF0433**	116,6×42,7×16,2	
2.0 CDTI	03/13 →	143	194	MN		[+]	**PF0724**	142×66,7×18,8		LG		[+]	**PF0433**	116,6×42,7×16,2	
Combo Van I															
1.3	85 →			DM		[-]	**PF0354**	100×59×15,6							
1.4	85 →			DM		[-]	**PF0354**	100×59×15,6							
1.6	85 →			DM		[-]	**PF0354**	100×59×15,6							
1.7 D	85 →			DM		[-]	**PF0354**	100×59×15,6							
Combo Van II															
1.2	07/94 → 09/01			ATE		[-]	**PF0208**	140,1×48,4×16,5							
1.4	07/94 → 09/01			ATE		[-]	**PF0208**	140,1×48,4×16,5							
1.7 D	07/94 → 09/01			ATE		[-]	**PF0208**	140,1×48,4×16,5							

		KW	CV														
				SiS	i	W.i.	MAGNETI MARELLI	W×H×Th (mm)	Extra kit [Opt]	SiS	i	W.i.	MAGNETI MARELLI	W×H×Th (mm)	Extra kit [Opt]
OPEL															
Combo Van III															
1.6 16V	10/01→			LG		[+]	**PF0362**	131,8×51,4×17	OK012/ OK035/ OK036	LG		[+]	**PF0356**	95,4×42,7×15	OK039/ OK069
1.6 16V	10/01→			ATE		[+]	**PF0364**	155,1×69,7×20,5	OK056	LG		[+]	**PF0356**	95,4×42,7×15	OK039/ OK069
1.7 Di	10/01→			LG		[+]	**PF0362**	131,8×51,4×17	OK012/ OK035/ OK036	LG		[+]	**PF0356**	95,4×42,7×15	OK039/ OK069
1.7 Di	10/01→			ATE		[+]	**PF0364**	155,1×69,7×20,5	OK056	LG		[+]	**PF0356**	95,4×42,7×15	OK039/ OK069
1.7 Dti	10/01→			LG		[+]	**PF0362**	131,8×51,4×17	OK012/ OK035/ OK036	LG		[+]	**PF0356**	95,4×42,7×15	OK039/ OK069
1.7 Dti	10/01→			ATE		[+]	**PF0364**	155,1×69,7×20,5	OK056	LG		[+]	**PF0356**	95,4×42,7×15	OK039/ OK069
Combo III Tour															
1.3 Cdti 16V	10/04→			ATE		[+]	**PF0364**	155,1×69,7×20,5	OK056	LG		[+]	**PF0356**	95,4×42,7×15	OK039/ OK069
1.4	10/04→			ATE		[+]	**PF0364**	155,1×69,7×20,5	OK056	LG		[+]	**PF0356**	95,4×42,7×15	OK039/ OK069
1.6 16V	10/01→			LG		[+]	**PF0362**	131,8×51,4×17	OK012/ OK035/ OK036	LG		[+]	**PF0356**	95,4×42,7×15	OK039/ OK069
1.6	10/01→			ATE		[+]	**PF0364**	155,1×69,7×20,5	OK056	LG		[+]	**PF0356**	95,4×42,7×15	OK039/ OK069
1.7 Di	10/01→			LG		[+]	**PF0362**	131,8×51,4×17	OK012/ OK035/ OK036	LG		[+]	**PF0356**	95,4×42,7×15	OK039/ OK069
1.7 Di	10/01→			ATE		[+]	**PF0364**	155,1×69,7×20,5	OK056	LG		[+]	**PF0356**	95,4×42,7×15	OK039/ OK069
1.7 Dti	10/01→			LG		[+]	**PF0362**	131,8×51,4×17	OK012/ OK035/ OK036	LG		[+]	**PF0356**	95,4×42,7×15	OK039/ OK069
1.7 Dti	10/01→			ATE		[+]	**PF0364**	155,1×69,7×20,5	OK056	LG		[+]	**PF0356**	95,4×42,7×15	OK039/ OK069
Combo (X12)															
1.4	02/12→	70	95	BSC	Ø Disc 284	[+]	**PF0214**	137×57,3×19	OK033						
1.4	02/12→	70	95	ATE		[+]	**PF0288**	155,2×71,3×20							
1.4	02/12→	88	120	BSC	Ø Disc 284	[+]	**PF0214**	137×57,3×19	OK033						
1.4	02/12→	88	120	ATE		[+]	**PF0288**	155,2×71,3×20							
1.6 CDTI	02/12→	66	90	BSC	Ø Disc 284	[+]	**PF0214**	137×57,3×19	OK033						
1.6 CDTI	02/12→	66	90	ATE		[+]	**PF0288**	155,2×71,3×20							
1.6 CDTI	02/12→	74	101	BSC	Ø Disc 284	[+]	**PF0214**	137×57,3×19	OK033						
1.6 CDTI	02/12→	74	101	ATE		[+]	**PF0288**	155,2×71,3×20							

		KW	CV	SiS	i	W.i.	MAGNETI MARELLI	W×H×Th (mm)	Extra kit [Opt]	SiS	i	W.i.	MAGNETI MARELLI	W×H×Th (mm)	Extra kit [Opt]
OPEL															
Combo (X12)															
1.6 CDTI	02/12→	77	105	BSC	Ø Disc 284	[+]	**PF0214**	137×57,3×19	OK033						
1.6 CDTI	02/12→	77	105	ATE		[+]	**PF0288**	155,2×71,3×20							
2.0 CDTI	02/12→	99	135	BSC	Ø Disc 284	[+]	**PF0214**	137×57,3×19	OK033						
2.0 CDTI	02/12→	99	135	ATE		[+]	**PF0288**	155,2×71,3×20							
1.4 CNG	11/11→	88	120	BSC	Ø Disc 284	[+]	**PF0214**	137×57,3×19	OK033						
1.4 CNG	11/11→	88	120	ATE		[+]	**PF0288**	155,2×71,3×20							
Combo Furgonato (X12)															
1.4	02/12→	70	95	BSC	Ø Disc 284	[+]	**PF0214**	137×57,3×19	OK033						
1.4	02/12→	70	95	ATE		[+]	**PF0288**	155,2×71,3×20							
1.4	02/12→	88	120	BSC	Ø Disc 284	[+]	**PF0214**	137×57,3×19	OK033						
1.4	02/12→	88	120	ATE		[+]	**PF0288**	155,2×71,3×20							
1.6 CDTI	02/12→	66	90	BSC	Ø Disc 284	[+]	**PF0214**	137×57,3×19	OK033						
1.6 CDTI	02/12→	66	90	ATE		[+]	**PF0288**	155,2×71,3×20							
1.6 CDTI	02/12→	77	105	BSC	Ø Disc 284	[+]	**PF0214**	137×57,3×19	OK033						
1.6 CDTI	02/12→	77	105	ATE		[+]	**PF0288**	155,2×71,3×20							
1.3 CDTI	02/12→	66	90	BSC	Ø Disc 284	[+]	**PF0214**	137×57,3×19	OK033						
1.3 CDTI	02/12→	66	90	ATE		[+]	**PF0288**	155,2×71,3×20							
1.6 CDTI	02/12→	74	101	BSC	Ø Disc 284	[+]	**PF0214**	137×57,3×19	OK033						
1.6 CDTI	02/12→	74	101	ATE		[+]	**PF0288**	155,2×71,3×20							
2.0 CDTI	02/12→	99	135	BSC	Ø Disc 284	[+]	**PF0214**	137×57,3×19	OK033						
2.0 CDTI	02/12→	99	135	ATE		[+]	**PF0288**	155,2×71,3×20							
Corsa A															
1.0	→91			DM		[-]	**PF0354**	100×59×15,6							
1.0	91→93			ATE		[-]	**PF0208**	140,1×48,4×16,5							
1.2i	→91			DM		[-]	**PF0354**	100×59×15,6							
1.2i	91→93			ATE		[-]	**PF0208**	140,1×48,4×16,5							
1.3 GT	→91			DM		[-]	**PF0354**	100×59×15,6							
1.3 GT	91→93			ATE		[-]	**PF0208**	140,1×48,4×16,5							
1.4 GT	→91			DM		[-]	**PF0354**	100×59×15,6							
1.4 GT	91→93			ATE		[-]	**PF0208**	140,1×48,4×16,5							
1.5 D	→91			DM		[-]	**PF0354**	100×59×15,6							
1.5 D	91→93			ATE		[-]	**PF0208**	140,1×48,4×16,5							
1.6i GS	→91			DM		[-]	**PF0354**	100×59×15,6							
1.6i GS	91→93			ATE		[-]	**PF0208**	140,1×48,4×16,5							
Corsa Van A															
1.0	02/86→04/89			DM		[-]	**PF0354**	100×59×15,6							
1.2	02/86→04/89			DM		[-]	**PF0354**	100×59×15,6							
1.3	02/86→04/89			DM		[-]	**PF0354**	100×59×15,6							
1.5 D	06/87→04/89			DM		[-]	**PF0354**	100×59×15,6							
Corsa B (73_, 78_, 79_)															
1.0 i 12V	11/96→09/00	40	54	ATE		[-]	**PF0208**	140,1×48,4×16,5							
1.2 i	03/93→09/00	33	45	ATE		[-]	**PF0208**	140,1×48,4×16,5							
1.2 i	03/93→09/00	33	45	ATE		[-]	**PF0208**	140,1×48,4×16,5							
1.2 i 16V	03/98→09/00	48	65	ATE		[-]	**PF0208**	140,1×48,4×16,5							

		KW	CV	SiS	i	W.i.	MAGNETI MARELLI	W×H×Th (mm)	Extra kit [Opt]	SiS	i	W.i.	MAGNETI MARELLI	W×H×Th (mm)	Extra kit [Opt]
OPEL															
Corsa B (73_, 78_, 79_)															
1.4	04/93 → 08/94	54	73	ATE		[-]	**PF0208**	140,1×48,4×16,5							
1.4 i	03/93 → 09/00	44	60	ATE		[-]	**PF0208**	140,1×48,4×16,5							
1.4 i 16V	09/94 → 09/00	66	90	ATE		[-]	**PF0208**	140,1×48,4×16,5							
1.4 i 16V	09/94 → 09/00	67	91	ATE		[-]	**PF0208**	140,1×48,4×16,5							
1.4 i 16V	08/97 → 09/00	63	86	ATE		[-]	**PF0208**	140,1×48,4×16,5							
1.4 Si	03/93 → 09/00	60	82	ATE		[-]	**PF0208**	140,1×48,4×16,5							
1.5 D	03/93 → 09/00	37	50	ATE		[-]	**PF0208**	140,1×48,4×16,5							
1.5 TD	03/93 → 09/00	49	67	ATE		[-]	**PF0208**	140,1×48,4×16,5							
1.6 GSI 16V	03/93 → 09/00	80	109	ATE		[-]	**PF0208**	140,1×48,4×16,5							
1.6 i 16V	09/94 → 09/00	78	106	ATE		[-]	**PF0208**	140,1×48,4×16,5							
1.6 i 16V	08/97 → 09/00	74	100	ATE		[-]	**PF0208**	140,1×48,4×16,5							
1.7 D	02/96 → 09/00	44	60	ATE		[-]	**PF0208**	140,1×48,4×16,5							
Corsa B Van (73_)															
1.4 i	08/99 → 09/00	44	60	ATE		[-]	**PF0208**	140,1×48,4×16,5							
1.6	08/05 →	71	97	ATE		[-]	**PF0208**	140,1×48,4×16,5							
1.7 D	08/99 → 09/00	44	60	ATE		[-]	**PF0208**	140,1×48,4×16,5							
1.7 DTi	08/01 →	55	75	ATE		[-]	**PF0208**	140,1×48,4×16,5							
Corsa B Furgonato															
1.4i	08/99 → 09/00			ATE		[-]	**PF0208**	140,1×48,4×16,5							
1.7 D	08/99 → 09/00			ATE		[-]	**PF0208**	140,1×48,4×16,5							
Corsa Brasile															
1.0	93 → 00			ATE		[-]	**PF0531**	104,2×50,7×16,5							
1.2 16V	93 → 00			ATE		[-]	**PF0531**	104,2×50,7×16,5							
1.4 16V	93 → 00			ATE		[-]	**PF0531**	104,2×50,7×16,5							
1.7 Di	93 → 00			ATE		[-]	**PF0531**	104,2×50,7×16,5							
1.2 dti	93 → 00			ATE		[-]	**PF0531**	104,2×50,7×16,5							
1.8	93 → 00			ATE		[-]	**PF0531**	104,2×50,7×16,5							
Corsa Brasile Van															
1.6 D	93 →			ATE		[-]	**PF0531**	104,2×50,7×16,5							
Corsa C															
1.0 12V	11/00 → 03			LG	← tel. 43999999	[+]	**PF0551**	131,8×51,4×17	OK012/ OK035/ OK036	LG	+Kit W.i.	[+]	**PF0552**	95,8×43,9×14	OK039/ OK069
1.0 12V Confort	11/00 → 03			LG	← tel. 43999999	[+]	**PF0551**	131,8×51,4×17	OK012/ OK035/ OK036	LG	+Kit W.i.	[+]	**PF0552**	95,8×43,9×14	OK039/ OK069
1.0 12V	03 → 06			LG	44000000 →	[+]	**PF0362**	131,8×51,4×17	OK012/ OK035/ OK036	LG	+Kit W.i.	[+]	**PF0552**	95,8×43,9×14	OK039/ OK069
1.2 16V	11/00 → 03			LG	← tel. 43999999	[+]	**PF0551**	131,8×51,4×17	OK012/ OK035/ OK036	LG	+Kit W.i.	[+]	**PF0552**	95,8×43,9×14	OK039/ OK069

		KW	CV	SiS	i	W.i.	MAGNETI MARELLI	W×H×Th (mm)	Extra kit [Opt]	SiS	i	W.i.	MAGNETI MARELLI	W×H×Th (mm)	Extra kit [Opt]
OPEL															
Corsa C															
1.2 16V Confort	11/00 → 03			LG	← tel. 43999999	[+]	**PF0551**	131,8×51,4×17	OK012/ OK035/ OK036	LG	+Kit W.i.	[+]	**PF0552**	95,8×43,9×14	OK039/ OK069
1.2 16V Elegance	11/00 → 03			LG	← tel. 43999999	[+]	**PF0551**	131,8×51,4×17	OK012/ OK035/ OK036	LG	+Kit W.i.	[+]	**PF0552**	95,8×43,9×14	OK039/ OK069
1.2 16V Sport	11/00 → 03			LG	← tel. 43999999	[+]	**PF0551**	131,8×51,4×17	OK012/ OK035/ OK036	LG	+Kit W.i.	[+]	**PF0552**	95,8×43,9×14	OK039/ OK069
1.2 16V	03 → 06			LG	44000000 →	[+]	**PF0362**	131,8×51,4×17	OK012/ OK035/ OK036	LG	+Kit W.i.	[+]	**PF0552**	95,8×43,9×14	OK039/ OK069
1.3 CDTi	03 → 06			LG	44000000 →	[+]	**PF0362**	131,8×51,4×17	OK012/ OK035/ OK036	LG	+Kit W.i.	[+]	**PF0552**	95,8×43,9×14	OK039/ OK069
1.4 16V Confort	11/00 → 03			LG	← tel. 43999999	[+]	**PF0551**	131,8×51,4×17	OK012/ OK035/ OK036	LG	+Kit W.i.	[+]	**PF0552**	95,8×43,9×14	OK039/ OK069
1.4 16V Elegance	11/00 → 03			LG	← tel. 43999999	[+]	**PF0551**	131,8×51,4×17	OK012/ OK035/ OK036	LG	+Kit W.i.	[+]	**PF0552**	95,8×43,9×14	OK039/ OK069
1.4 16V Sport	11/00 → 03			LG	← tel. 43999999	[+]	**PF0551**	131,8×51,4×17	OK012/ OK035/ OK036	LG	+Kit W.i.	[+]	**PF0552**	95,8×43,9×14	OK039/ OK069
1.4 16V	03 → 06			LG	44000000 →	[+]	**PF0362**	131,8×51,4×17	OK012/ OK035/ OK036	LG	+Kit W.i.	[+]	**PF0552**	95,8×43,9×14	OK039/ OK069
1.7 TD 16V Confort	11/00 → 03			LG	← tel. 43999999	[+]	**PF0551**	131,8×51,4×17	OK012/ OK035/ OK036	LG	+Kit W.i.	[+]	**PF0552**	95,8×43,9×14	OK039/ OK069
1.7 TD 16V Elegance	11/00 → 03			LG	← tel. 43999999	[+]	**PF0551**	131,8×51,4×17	OK012/ OK035/ OK036	LG	+Kit W.i.	[+]	**PF0552**	95,8×43,9×14	OK039/ OK069
1.7 TD 16V Sport	11/00 → 03			LG	← tel. 43999999	[+]	**PF0551**	131,8×51,4×17	OK012/ OK035/ OK036	LG	+Kit W.i.	[+]	**PF0552**	95,8×43,9×14	OK039/ OK069
1.7 TD 16V	03 → 06			LG	44000000 →	[+]	**PF0362**	131,8×51,4×17	OK012/ OK035/ OK036	LG	+Kit W.i.	[+]	**PF0552**	95,8×43,9×14	OK039/ OK069
1.7 TDI 16V	04 → 06		101	ATE	(Z17)	[+]	**PF0364**	155,1×69,7×20,5	OK056						
1.8 16V Gsi	11/00 → 06			LG		[+]	**PF0362**	131,8×51,4×17	OK012/ OK035/ OK036	LG	+Kit W.i.	[+]	**PF0552**	95,8×43,9×14	OK039/ OK069

		KW	CV	SiS	i	W.i.	MAGNETI MARELLI	W×H×Th (mm)	Extra kit [Opt]	SiS	i	W.i.	MAGNETI MARELLI	W×H×Th (mm)	Extra kit [Opt]
OPEL															
Corsa C Van															
1.2i 16V	09/00→			LG		[+]	**PF0362**	131,8×51,4×17	OK012/ OK035/ OK036	LG	+Kit W.i.	[+]	**PF0552**	95,8×43,9×14	OK039/ OK069
1.7 Di	09/00→			LG		[+]	**PF0362**	131,8×51,4×17	OK012/ OK035/ OK036	LG	+Kit W.i.	[+]	**PF0552**	95,8×43,9×14	OK039/ OK069
1.7 Dti	09/00→			LG		[+]	**PF0362**	131,8×51,4×17	OK012/ OK035/ OK036	LG	+Kit W.i.	[+]	**PF0552**	95,8×43,9×14	OK039/ OK069
Corsa D															
1.0	01/10→	48	65	BSC		[+]	**PF0361**	122,9×53,4×18	OK012						
1.0	07/06→	44	60	BSC		[+]	**PF0361**	122,9×53,4×18	OK012						
1.2	07/06→	59	80	BSC		[+]	**PF0361**	122,9×53,4×18	OK012						
1.2	06/10→	51	69	BSC		[+]	**PF0361**	122,9×53,4×18	OK012						
1.2	06/10→	63	86	BSC		[+]	**PF0361**	122,9×53,4×18	OK012						
1.2 LPG	06/11→	61	83	BSC		[+]	**PF0361**	122,9×53,4×18	OK012						
1.2 LPG	09/09→	59	80	BSC		[+]	**PF0361**	122,9×53,4×18	OK012						
1.3 CDTI	07/06→	55	75	BSC	Ø Disc 257	[+]	**PF0361**	122,9×53,4×18	OK012						
1.3 CDTI	07/06→	66	90	BSC	Ø Disc 284	[+]	**PF0561**	137×57,3×19	OK033/ OK038						
1.3 CDTI	06/10→	70	95	BSC	Ø Disc 257	[+]	**PF0361**	122,9×53,4×18	OK012/ OK038						
1.3 CDTI	06/10→	70	95	BSC	Ø Disc 284	[+]	**PF0561**	137×57,3×19	OK033/ OK038						
1.4	07/06→	66	90	BSC		[+]	**PF0361**	122,9×53,4×18	OK012						
1.4	09/09→	64	87	BSC		[+]	**PF0361**	122,9×53,4×18	OK012						
1.4	06/10→	74	100	BSC		[+]	**PF0361**	122,9×53,4×18	OK012						
1.4 LPG	09/09→	64	87	BSC		[+]	**PF0361**	122,9×53,4×18	OK012						
1.4 LPG	07/06→	66	90	BSC		[+]	**PF0361**	122,9×53,4×18	OK012						
1.6 Turbo	06/11→	155	211	ATE		[+]	**PF0364**	155,1×69,7×20,5	OK056	BSC		[-]	**PF0230**	102×47,1×17,2	OK033/ OK040
1.6 Turbo	02/07→	141	192	ATE		[+]	**PF0364**	155,1×69,7×20,5	OK056	BSC		[-]	**PF0230**	102×47,1×17,2	OK033/ OK040
1.6 Turbo	02/07→	110	150	ATE		[+]	**PF0364**	155,1×69,7×20,5	OK056	BSC		[-]	**PF0230**	102×47,1×17,2	OK033/ OK040
1.7 CDTI	07/06→	92	125	BSC		[+]	**PF0618**	151×54,8×19	OK012/ OK038	BSC		[-]	**PF0230**	102×47,1×17,2	OK033/ OK040
1.7 CDTI	06/10→	96	130	BSC		[+]	**PF0618**	151×54,8×19	OK012/ OK038	BSC		[-]	**PF0230**	102×47,1×17,2	OK033/ OK040
Corsa D Van															
1.0	01/10→	48	65	BSC		[+]	**PF0361**	122,9×53,4×18	OK012						
1.0	07/06→	44	60	BSC		[+]	**PF0361**	122,9×53,4×18	OK012						
1.2	06/10→	51	69	BSC		[+]	**PF0361**	122,9×53,4×18	OK012						
1.2	07/09→	59	80	BSC		[+]	**PF0361**	122,9×53,4×18	OK012						

		KW	CV	SiS		W.i.	MAGNETI MARELLI	W×H×Th (mm)	Extra kit [Opt]	SiS		W.i.	MAGNETI MARELLI	W×H×Th (mm)	Extra kit [Opt]
OPEL															
Corsa D Van															
1.2	06/10 →	63	86	BSC		[+]	**PF0361**	122,9×53,4×18	OK012						
1.3 CDTI	07/06 →	55	75	BSC		[+]	**PF0361**	122,9×53,4×18	OK012						
1.3 CDTI	07/06 →	66	90	BSC		[+]	**PF0361**	122,9×53,4×18	OK012						
1.3 CDTI	06/10 →	70	95	BSC		[+]	**PF0361**	122,9×53,4×18	OK012						
Corsa E															
1.0	09/14 →	66	90	ATE	14"	[+]	**PF0813**	155,1×52,5×17,4							
1.0	09/14 →	66	90	ATE	15"	[+]	**PF0814**	155,1×68×18,2							
1.0	09/14 →	85	115	ATE	14"	[+]	**PF0813**	155,1×52,5×17,4							
1.0	09/14 →	85	115	ATE	15"	[+]	**PF0814**	155,1×68×18,2							
1.2	09/14 →	51	69	ATE	14"	[+]	**PF0813**	155,1×52,5×17,4							
1.2	09/14 →	51	69	ATE	15"	[+]	**PF0814**	155,1×68×18,2							
1.4	09/14 →	55	75	ATE	14"	[+]	**PF0813**	155,1×52,5×17,4							
1.4	09/14 →	55	75	ATE	15"	[+]	**PF0814**	155,1×68×18,2							
1.4	09/14 →	66	90	ATE	14"	[+]	**PF0813**	155,1×52,5×17,4							
1.4	09/14 →	66	90	ATE	15"	[+]	**PF0814**	155,1×68×18,2							
1.3 CDTI	09/14 →	55	75	ATE	14"	[+]	**PF0813**	155,1×52,5×17,4							
1.3 CDTI	09/14 →	55	75	ATE	15"	[+]	**PF0814**	155,1×68×18,2							
1.3 CDTI	09/14 →	70	95	ATE	14"	[+]	**PF0813**	155,1×52,5×17,4							
1.3 CDTI	09/14 →	70	95	ATE	15"	[+]	**PF0814**	155,1×68×18,2							
1.4 Turbo	09/14 →	74	101	ATE	14"	[+]	**PF0813**	155,1×52,5×17,4							
1.4 Turbo	09/14 →	74	101	ATE	15"	[+]	**PF0814**	155,1×68×18,2							
Insignia Berlina															
1.4	04/11 →	103	140	LG		[+]	**PF0363**	184,7×65,8×17		LG	Ø Disc 292	[+]	**PF0690**	106,5×47,1×17,2	OK071
1.4	04/11 →	103	140	MN	(POCJ_60)/ 16"	[+]	**PF0723**	131,5×59,6×19		LG	Ø Disc 315	[+]	**PF0690**	106,5×47,1×17,2	OK075
1.4	04/11 →	103	140	MN	(POCJ_61)/ 17"	[+]	**PF0724**	142×66,7×18,8		LG	Ø Disc 315	[+]	**PF0690**	106,5×47,1×17,2	OK075
1.4 LPG	07/12 →	103	140	MN	17"/ POC-J61	[+]	**PF0724**	142×66,7×18,8		LG		[+]	**PF0690**	106,5×47,1×17,2	
1.6 SIDI	03/13 →	125	170	MN	17"/ POC-J61	[+]	**PF0724**	142×66,7×18,8		LG		[+]	**PF0690**	106,5×47,1×17,2	
1.6 Turbo	07/08 →	132	180	LG		[+]	**PF0363**	184,7×65,8×17		LG	Ø Disc 292	[+]	**PF0690**	106,5×47,1×17,2	OK071
1.6 Turbo	07/08 →	132	180	MN	(POCJ_60)/ 16"	[+]	**PF0723**	131,5×59,6×19		LG	Ø Disc 315	[+]	**PF0690**	106,5×47,1×17,2	OK075
1.6 Turbo	07/08 →	132	180	MN	(POCJ_61)/ 17"	[+]	**PF0724**	142×66,7×18,8		LG	Ø Disc 315	[+]	**PF0690**	106,5×47,1×17,2	OK075
1.6	07/08 →	85	116	LG		[+]	**PF0363**	184,7×65,8×17		LG	Ø Disc 292	[+]	**PF0690**	106,5×47,1×17,2	OK071
1.6	07/08 →	85	116	MN	(POCJ_60)/ 16"	[+]	**PF0723**	131,5×59,6×19		LG	Ø Disc 315	[+]	**PF0690**	106,5×47,1×17,2	OK075
1.6	07/08 →	85	116	MN	(POCJ_61)/ 17"	[+]	**PF0724**	142×66,7×18,8		LG	Ø Disc 315	[+]	**PF0690**	106,5×47,1×17,2	OK075
1.8	07/08 →	103	140	LG		[+]	**PF0363**	184,7×65,8×17		LG	Ø Disc 292	[+]	**PF0690**	106,5×47,1×17,2	OK071
1.8	07/08 →	103	140	MN	(POCJ_60)/ 16"	[+]	**PF0723**	131,5×59,6×19		LG	Ø Disc 315	[+]	**PF0690**	106,5×47,1×17,2	OK075

OPEL

Insignia Berlina

		KW	CV	SiS	i	W.i.	MAGNETI MARELLI	W×H×Th (mm)	Extra kit [Opt]	SiS	i	W.i.	MAGNETI MARELLI	W×H×Th (mm)	Extra kit [Opt]
1.8	07/08→	103	140	MN	(POCJ_61)/ 17"	[+]	**PF0724**	142×66,7×18,8		LG	Ø Disc 315	[+]	**PF0690**	106,5×47,1×17,2	OK075
2.0 Biturbo CDTI	07/08→	140	190	LG		[+]	**PF0363**	184,7×65,8×17		LG	Ø Disc 292	[+]	**PF0690**	106,5×47,1×17,2	OK071
2.0 Biturbo CDTI	07/08→	140	190	MN	(POCJ_60)/ 16"	[+]	**PF0723**	131,5×59,6×19		LG	Ø Disc 315	[+]	**PF0690**	106,5×47,1×17,2	OK075
2.0 Biturbo CDTI	07/08→	140	190	MN	(POCJ_61)/ 17"	[+]	**PF0724**	142×66,7×18,8		LG	Ø Disc 315	[+]	**PF0690**	106,5×47,1×17,2	OK075
2.0 Biturbo CDTI	01/12→	143	195	LG		[+]	**PF0363**	184,7×65,8×17		LG	Ø Disc 292	[+]	**PF0690**	106,5×47,1×17,2	OK071
2.0 Biturbo CDTI	01/12→	143	195	MN	(POCJ_60)/ 16"	[+]	**PF0723**	131,5×59,6×19		LG	Ø Disc 315	[+]	**PF0690**	106,5×47,1×17,2	OK075
2.0 Biturbo CDTI	01/12→	143	195	MN	(POCJ_61)/ 17"	[+]	**PF0724**	142×66,7×18,8		LG	Ø Disc 315	[+]	**PF0690**	106,5×47,1×17,2	OK075
2.0 Biturbo CDTI 4x4	05/09→	140	190	LG		[+]	**PF0363**	184,7×65,8×17		LG	Ø Disc 292	[+]	**PF0690**	106,5×47,1×17,2	OK071
2.0 Biturbo CDTI 4x4	05/09→	140	190	MN	(POCJ_60)/ 16"	[+]	**PF0723**	131,5×59,6×19		LG	Ø Disc 315	[+]	**PF0690**	106,5×47,1×17,2	OK075
2.0 Biturbo CDTI 4x4	05/09→	140	190	MN	17"	[+]	**PF0724**	142×66,7×18,8		LG	Ø Disc 315	[+]	**PF0690**	106,5×47,1×17,2	OK075
2.0 CDTI	07/08→	81	110	LG		[+]	**PF0363**	184,7×65,8×17		LG	Ø Disc 292	[+]	**PF0690**	106,5×47,1×17,2	OK071
2.0 CDTI	07/08→	81	110	MN	(POCJ_60)/ 16"	[+]	**PF0723**	131,5×59,6×19		LG	Ø Disc 315	[+]	**PF0690**	106,5×47,1×17,2	OK075
2.0 CDTI	07/08→	81	110	MN	(POCJ_61)/ 17"	[+]	**PF0724**	142×66,7×18,8		LG	Ø Disc 315	[+]	**PF0690**	106,5×47,1×17,2	OK075
2.0 CDTI	03/12→	88	120	MN	17"/ POC-J61	[+]	**PF0724**	142×66,7×18,8		LG		[+]	**PF0690**	106,5×47,1×17,2	
2.0 CDTI	07/08→	96	131	LG		[+]	**PF0363**	184,7×65,8×17		LG	Ø Disc 292	[+]	**PF0690**	106,5×47,1×17,2	OK071
2.0 CDTI	07/08→	96	131	MN	(POCJ_60)/ 16"	[+]	**PF0723**	131,5×59,6×19		LG	Ø Disc 315	[+]	**PF0690**	106,5×47,1×17,2	OK075
2.0 CDTI	07/08→	96	131	MN	(POCJ_61)/ 17"	[+]	**PF0724**	142×66,7×18,8		LG	Ø Disc 315	[+]	**PF0690**	106,5×47,1×17,2	OK075
2.0 CDTI	07/13→	103	140	MN	17"/ POC-J61	[+]	**PF0724**	142×66,7×18,8		LG		[+]	**PF0690**	106,5×47,1×17,2	
2.0 CDTI	07/13→	120	163	MN	17"/ POC-J61	[+]	**PF0724**	142×66,7×18,8		LG		[+]	**PF0690**	106,5×47,1×17,2	
2.0 CDTI 4x4	06/10→	118	160	LG		[+]	**PF0363**	184,7×65,8×17		LG	Ø Disc 292	[+]	**PF0690**	106,5×47,1×17,2	OK071
2.0 CDTI 4x4	06/10→	118	160	MN	(POCJ_60)/ 16"	[+]	**PF0723**	131,5×59,6×19		LG	Ø Disc 315	[+]	**PF0690**	106,5×47,1×17,2	OK075
2.0 CDTI 4x4	06/10→	118	160	MN	(POCJ_61)/ 17"	[+]	**PF0724**	142×66,7×18,8		LG	Ø Disc 315	[+]	**PF0690**	106,5×47,1×17,2	OK075
2.0 CDTI 4x4	07/13→	120	163	MN	17"/ POC-J61	[+]	**PF0724**	142×66,7×18,8		LG		[+]	**PF0690**	106,5×47,1×17,2	

		KW	CV													
				SiS	i	W.i.	MAGNETI MARELLI	W×H×Th (mm)	Extra kit [Opt]	SiS	i	W.i.	MAGNETI MARELLI	W×H×Th (mm)	Extra kit [Opt]
OPEL															
Insignia Berlina															
2.8 V6 Turbo 4x4	07/08 →	191	260	LG		[+]	**PF0363**	184,7×65,8×17		LG	Ø Disc 292	[+]	**PF0690**	106,5×47,1×17,2	OK071
2.8 V6 Turbo 4x4	07/08 →	191	260	MN	(POCJ_60)/ 16"	[+]	**PF0723**	131,5×59,6×19		LG	Ø Disc 315	[+]	**PF0690**	106,5×47,1×17,2	OK075
2.8 V6 Turbo 4x4	07/08 →	191	260	MN	(POCJ_61)/ 17"	[+]	**PF0724**	142×66,7×18,8		LG	Ø Disc 315	[+]	**PF0690**	106,5×47,1×17,2	OK075
2.8 V6 Turbo OPC 4x4	07/09 →	239	325	LG		[+]	**PF0363**	184,7×65,8×17		LG		[+]	**PF0690**	106,5×47,1×17,2	OK096
2.8 V6 Turbo OPC 4x4	07/09 →	239	325	BR	Veicoli corazzati	[+]	**PF0502**	131,8×77,3×16,1		LG		[+]	**PF0690**	106,5×47,1×17,2	OK096
2.8 V6 Turbo OPC 4x4	07/09 →	239	325	MN	(POCJ_60)/ 16"	[+]	**PF0723**	131,5×59,6×19		LG		[+]	**PF0690**	106,5×47,1×17,2	OK096
2.8 V6 Turbo OPC 4x4	07/09 →	239	325	MN	(POCJ_61)/ 17"	[+]	**PF0724**	142×66,7×18,8		LG		[+]	**PF0690**	106,5×47,1×17,2	OK096
Insignia 3 Volumi															
1.4	04/11 →	103	140	LG		[+]	**PF0363**	184,7×65,8×17		LG	Ø Disc 292	[+]	**PF0690**	106,5×47,1×17,2	OK071
1.4	06/10 →	103	140	MN	(POCJ_60)/ 16"	[+]	**PF0723**	131,5×59,6×19		LG	Ø Disc 315	[+]	**PF0690**	106,5×47,1×17,2	OK075
1.4	06/10 →	103	140	MN	(POCJ_61)/ 17"	[+]	**PF0724**	142×66,7×18,8		LG	Ø Disc 315	[+]	**PF0690**	106,5×47,1×17,2	OK075
1.4 LPG	07/12 →	103	140	MN	17"/ POC-J61	[+]	**PF0724**	142×66,7×18,8		LG		[+]	**PF0690**	106,5×47,1×17,2	
1.6	07/08 →	85	116	LG		[+]	**PF0363**	184,7×65,8×17		LG	Ø Disc 292	[+]	**PF0690**	106,5×47,1×17,2	OK071
1.6	06/10 →	85	116	MN	(POCJ_60)/ 16"	[+]	**PF0723**	131,5×59,6×19		LG	Ø Disc 315	[+]	**PF0690**	106,5×47,1×17,2	OK075
1.6	06/10 →	85	116	MN	(POCJ_61)/ 17"	[+]	**PF0724**	142×66,7×18,8		LG	Ø Disc 315	[+]	**PF0690**	106,5×47,1×17,2	OK075
1.6 SIDI	03/13 →	125	170	MN	17"/ POC-J61	[+]	**PF0724**	142×66,7×18,8		LG		[+]	**PF0690**	106,5×47,1×17,2	
1.6 Turbo	01/09 →	132	180	LG		[+]	**PF0363**	184,7×65,8×17		LG	Ø Disc 292	[+]	**PF0690**	106,5×47,1×17,2	OK071
1.6 Turbo	06/10 →	132	180	MN	(POCJ_60)/ 16"	[+]	**PF0723**	131,5×59,6×19		LG	Ø Disc 315	[+]	**PF0690**	106,5×47,1×17,2	OK075
1.6 Turbo	06/10 →	132	180	MN	(POCJ_61)/ 17"	[+]	**PF0724**	142×66,7×18,8		LG	Ø Disc 315	[+]	**PF0690**	106,5×47,1×17,2	OK075
1.8	07/08 →	103	140	LG		[+]	**PF0363**	184,7×65,8×17		LG	Ø Disc 292	[+]	**PF0690**	106,5×47,1×17,2	OK071
1.8	06/10 →	103	140	MN	(POCJ_60)/ 16"	[+]	**PF0723**	131,5×59,6×19		LG	Ø Disc 315	[+]	**PF0690**	106,5×47,1×17,2	OK075
1.8	06/10 →	103	140	MN	(POCJ_61)/ 17"	[+]	**PF0724**	142×66,7×18,8		LG	Ø Disc 315	[+]	**PF0690**	106,5×47,1×17,2	OK075
2.0 Biturbo CDTI	07/08 →	140	190	LG		[+]	**PF0363**	184,7×65,8×17		LG	Ø Disc 292	[+]	**PF0690**	106,5×47,1×17,2	OK071
2.0 Biturbo CDTI	06/10 →	140	190	MN	(POCJ_60)/ 16"	[+]	**PF0723**	131,5×59,6×19		LG	Ø Disc 315	[+]	**PF0690**	106,5×47,1×17,2	OK075



KW	CV	SiS	i	W.i.	MAGNETI MARELLI	W×H×Th (mm)	Extra kit [Opt]	SiS	i	W.i.	MAGNETI MARELLI	W×H×Th (mm)	Extra kit [Opt]
OPEL													
Insignia 3 Volumi													
2.0 Biturbo CDTI	06/10→	140	190	MN	(POCJ_61)/ 17"	[+]	**PF0724**	142×66,7×18,8		LG	Ø Disc 315	[+]	**PF0690**	106,5×47,1×17,2	OK075
2.0 Biturbo CDTI	12→	143	195	LG		[+]	**PF0363**	184,7×65,8×17		LG	Ø Disc 292	[+]	**PF0690**	106,5×47,1×17,2	OK071
2.0 Biturbo CDTI	12→	143	195	MN	(POCJ_60)/ 16"	[+]	**PF0723**	131,5×59,6×19		LG	Ø Disc 315	[+]	**PF0690**	106,5×47,1×17,2	OK075
2.0 Biturbo CDTI	12→	143	195	MN	(POCJ_61)/ 17"	[+]	**PF0724**	142×66,7×18,8		LG	Ø Disc 315	[+]	**PF0690**	106,5×47,1×17,2	OK075
2.0 Biturbo CDTI 4x4	07/08→	140	190	LG		[+]	**PF0363**	184,7×65,8×17		LG	Ø Disc 292	[+]	**PF0690**	106,5×47,1×17,2	OK071
2.0 Biturbo CDTI 4x4	06/10→	140	190	MN	(POCJ_60)/ 16"	[+]	**PF0723**	131,5×59,6×19		LG	Ø Disc 315	[+]	**PF0690**	106,5×47,1×17,2	OK075
2.0 Biturbo CDTI 4x4	06/10→	140	190	MN	(POCJ_61)/ 17"	[+]	**PF0724**	142×66,7×18,8		LG	Ø Disc 315	[+]	**PF0690**	106,5×47,1×17,2	OK075
2.0 CDTI	07/08→	81	110	LG		[+]	**PF0363**	184,7×65,8×17		LG	Ø Disc 292	[+]	**PF0690**	106,5×47,1×17,2	OK071
2.0 CDTI	06/10→	81	110	MN	(POCJ_60)/ 16"	[+]	**PF0723**	131,5×59,6×19		LG	Ø Disc 315	[+]	**PF0690**	106,5×47,1×17,2	OK075
2.0 CDTI	06/10→	81	110	MN	(POCJ_61)/ 17"	[+]	**PF0724**	142×66,7×18,8		LG	Ø Disc 315	[+]	**PF0690**	106,5×47,1×17,2	OK075
2.0 CDTI	03/12→	88	120	MN	17"/ POC-J61	[+]	**PF0724**	142×66,7×18,8		LG		[+]	**PF0690**	106,5×47,1×17,2	
2.0 CDTI	07/08→	96	131	LG		[+]	**PF0363**	184,7×65,8×17		LG	Ø Disc 292	[+]	**PF0690**	106,5×47,1×17,2	OK071
2.0 CDTI	06/10→	96	131	MN	(POCJ_60)/ 16"	[+]	**PF0723**	131,5×59,6×19		LG	Ø Disc 315	[+]	**PF0690**	106,5×47,1×17,2	OK075
2.0 CDTI	06/10→	96	131	MN	(POCJ_61)/ 17"	[+]	**PF0724**	142×66,7×18,8		LG	Ø Disc 315	[+]	**PF0690**	106,5×47,1×17,2	OK075
2.0 CDTI	07/13→	103	140	MN	17"/ POC-J61	[+]	**PF0724**	142×66,7×18,8		LG		[+]	**PF0690**	106,5×47,1×17,2	
2.0 CDTI	07/08→	118	160	LG		[+]	**PF0363**	184,7×65,8×17		LG	Ø Disc 292	[+]	**PF0690**	106,5×47,1×17,2	OK071
2.0 CDTI	06/10→	118	160	MN	(POCJ_60)/ 16"	[+]	**PF0723**	131,5×59,6×19		LG	Ø Disc 315	[+]	**PF0690**	106,5×47,1×17,2	OK075
2.0 CDTI	06/10→	118	160	MN	(POCJ_61)/ 17"	[+]	**PF0724**	142×66,7×18,8		LG	Ø Disc 315	[+]	**PF0690**	106,5×47,1×17,2	OK075
2.0 CDTI	07/13→	120	163	MN	17"/ POC-J61	[+]	**PF0724**	142×66,7×18,8		LG		[+]	**PF0690**	106,5×47,1×17,2	
2.0 CDTI 4x4	06/10→	118	160	LG		[+]	**PF0363**	184,7×65,8×17		LG	Ø Disc 292	[+]	**PF0690**	106,5×47,1×17,2	OK071
2.0 CDTI 4x4	06/10→	118	160	MN	(POCJ_60)/ 16"	[+]	**PF0723**	131,5×59,6×19		LG	Ø Disc 315	[+]	**PF0690**	106,5×47,1×17,2	OK075
2.0 CDTI 4x4	06/10→	118	160	MN	(POCJ_61)/ 17"	[+]	**PF0724**	142×66,7×18,8		LG	Ø Disc 315	[+]	**PF0690**	106,5×47,1×17,2	OK075
2.0 CDTI 4x4	07/13→	120	163	MN	17"/ POC-J61	[+]	**PF0724**	142×66,7×18,8		LG		[+]	**PF0690**	106,5×47,1×17,2	
2.0 Turbo	07/08→	162	220	LG		[+]	**PF0363**	184,7×65,8×17		LG	Ø Disc 292	[+]	**PF0690**	106,5×47,1×17,2	OK071

		KW	CV													
				SiS	i	W.i.	MAGNETI MARELLI	W×H×Th (mm)	Extra kit [Opt]	SiS	i	W.i.	MAGNETI MARELLI	W×H×Th (mm)	Extra kit [Opt]
OPEL																
Insignia 3 Volumi																
2.0 Turbo	06/10→	162	220	MN	(POCJ_60)/ 16"	[+]	**PF0723**	131,5×59,6×19		LG	Ø Disc 315	[+]	**PF0690**	106,5×47,1×17,2	OK075
2.0 Turbo	06/10→	162	220	MN	(POCJ_61)/ 17"	[+]	**PF0724**	142×66,7×18,8		LG	Ø Disc 315	[+]	**PF0690**	106,5×47,1×17,2	OK075
2.0 Turbo 4x4	07/08→	162	220	LG		[+]	**PF0363**	184,7×65,8×17		LG	Ø Disc 292	[+]	**PF0690**	106,5×47,1×17,2	OK071
2.0 Turbo 4x4	06/10→	162	220	MN	(POCJ_60)/ 16"	[+]	**PF0723**	131,5×59,6×19		LG	Ø Disc 315	[+]	**PF0690**	106,5×47,1×17,2	OK075
2.0 Turbo 4x4	06/10→	162	220	MN	(POCJ_61)/ 17"	[+]	**PF0724**	142×66,7×18,8		LG	Ø Disc 315	[+]	**PF0690**	106,5×47,1×17,2	OK075
2.0 Turbo E85	07/08→	162	220	LG		[+]	**PF0363**	184,7×65,8×17		LG	Ø Disc 292	[+]	**PF0690**	106,5×47,1×17,2	OK071
2.0 Turbo E85	06/10→	162	220	MN	(POCJ_60)/ 16"	[+]	**PF0723**	131,5×59,6×19		LG	Ø Disc 315	[+]	**PF0690**	106,5×47,1×17,2	OK075
2.0 Turbo E85	06/10→	162	220	MN	(POCJ_61)/ 17"	[+]	**PF0724**	142×66,7×18,8		LG	Ø Disc 315	[+]	**PF0690**	106,5×47,1×17,2	OK075
2.8 V6 Turbo 4x4	07/08→	191	260	LG		[+]	**PF0363**	184,7×65,8×17		LG	Ø Disc 292	[+]	**PF0690**	106,5×47,1×17,2	OK071
2.8 V6 Turbo 4x4	06/10→	191	260	MN	(POCJ_60)/ 16"	[+]	**PF0723**	131,5×59,6×19		LG	Ø Disc 315	[+]	**PF0690**	106,5×47,1×17,2	OK075
2.8 V6 Turbo 4x4	06/10→	191	260	MN	(POCJ_61)/ 17"	[+]	**PF0724**	142×66,7×18,8		LG	Ø Disc 315	[+]	**PF0690**	106,5×47,1×17,2	OK075
2.8 V6 Turbo OPC 4x4	07/09→	239	325	LG		[+]	**PF0363**	184,7×65,8×17		LG	x OPC	[+]	**PF0690**	106,5×47,1×17,2	OK096
2.8 V6 Turbo OPC 4x4	07/09→	239	325	BR	Veicoli corazzati	[+]	**PF0502**	131,8×77,3×16,1		LG	x OPC	[+]	**PF0690**	106,5×47,1×17,2	OK096
2.8 V6 Turbo OPC 4x4	06/10→	239	325	MN	(POCJ_60)/ 16"	[+]	**PF0723**	131,5×59,6×19		LG	x OPC	[+]	**PF0690**	106,5×47,1×17,2	OK096
2.8 V6 Turbo OPC 4x4	06/10→	239	325	MN	(POCJ_61)/ 17"	[+]	**PF0724**	142×66,7×18,8		LG	x OPC	[+]	**PF0690**	106,5×47,1×17,2	OK096
Insignia Sports Tourer																
1.4 LPG	07/12→	103	140	MN	17"/ POC-J61	[+]	**PF0724**	142×66,7×18,8		LG		[+]	**PF0690**	106,5×47,1×17,2	
1.6	07/08→	85	116	LG		[+]	**PF0363**	184,7×65,8×17		LG	Ø Disc 292	[+]	**PF0690**	106,5×47,1×17,2	OK071
1.6	06/10→	85	116	MN	(POCJ_60)/ 16"	[+]	**PF0723**	131,5×59,6×19		LG	Ø Disc 315	[+]	**PF0690**	106,5×47,1×17,2	OK075
1.6	06/10→	85	116	MN	(POCJ_61)/ 17"	[+]	**PF0724**	142×66,7×18,8		LG	Ø Disc 315	[+]	**PF0690**	106,5×47,1×17,2	OK075
1.6 SIDI	03/13→	125	170	MN	17"/ POC-J61	[+]	**PF0724**	142×66,7×18,8		LG		[+]	**PF0690**	106,5×47,1×17,2	
1.6 Turbo	01/09→	132	180	LG		[+]	**PF0363**	184,7×65,8×17		LG	Ø Disc 292	[+]	**PF0690**	106,5×47,1×17,2	OK071
1.6 Turbo	06/10→	132	180	MN	(POCJ_60)/ 16"	[+]	**PF0723**	131,5×59,6×19		LG	Ø Disc 315	[+]	**PF0690**	106,5×47,1×17,2	OK075
1.6 Turbo	06/10→	132	180	MN	(POCJ_61)/ 17"	[+]	**PF0724**	142×66,7×18,8		LG	Ø Disc 315	[+]	**PF0690**	106,5×47,1×17,2	OK075
1.8	07/08→	103	140	LG		[+]	**PF0363**	184,7×65,8×17		LG	Ø Disc 292	[+]	**PF0690**	106,5×47,1×17,2	OK071

		KW	CV	SiS	i	W.i.	MAGNETI MARELLI	W×H×Th (mm)	Extra kit [Opt]	SiS	i	W.i.	MAGNETI MARELLI	W×H×Th (mm)	Extra kit [Opt]
OPEL															
Insignia Sports Tourer															
1.8	06/10→	103	140	MN	(POCJ_60)/ 16"	[+]	**PF0723**	131,5×59,6×19		LG	Ø Disc 315	[+]	**PF0690**	106,5×47,1×17,2	OK075
1.8	06/10→	103	140	MN	(POCJ_61)/ 17"	[+]	**PF0724**	142×66,7×18,8		LG	Ø Disc 315	[+]	**PF0690**	106,5×47,1×17,2	OK075
2.0 Biturbo CDTI	07/08→	140	190	LG		[+]	**PF0363**	184,7×65,8×17		LG	Ø Disc 292	[+]	**PF0690**	106,5×47,1×17,2	OK071
2.0 Biturbo CDTI	06/10→	140	190	MN	(POCJ_60)/ 16"	[+]	**PF0723**	131,5×59,6×19		LG	Ø Disc 315	[+]	**PF0690**	106,5×47,1×17,2	OK075
2.0 Biturbo CDTI	06/10→	140	190	MN	(POCJ_61)/ 17"	[+]	**PF0724**	142×66,7×18,8		LG	Ø Disc 315	[+]	**PF0690**	106,5×47,1×17,2	OK075
2.0 Biturbo CDTI	12→	143	195	LG		[+]	**PF0363**	184,7×65,8×17		LG	Ø Disc 292	[+]	**PF0690**	106,5×47,1×17,2	OK071
2.0 Biturbo CDTI	12→	143	195	MN	(POCJ_60)/ 16"	[+]	**PF0723**	131,5×59,6×19		LG	Ø Disc 315	[+]	**PF0690**	106,5×47,1×17,2	OK075
2.0 Biturbo CDTI	12→	143	195	MN	(POCJ_61)/ 17"	[+]	**PF0724**	142×66,7×18,8		LG	Ø Disc 315	[+]	**PF0690**	106,5×47,1×17,2	OK075
2.0 Biturbo CDTI 4x4	07/08→	140	190	LG		[+]	**PF0363**	184,7×65,8×17		LG	Ø Disc 292	[+]	**PF0690**	106,5×47,1×17,2	OK071
2.0 Biturbo CDTI 4x4	06/10→	140	190	MN	(POCJ_60)/ 16"	[+]	**PF0723**	131,5×59,6×19		LG	Ø Disc 315	[+]	**PF0690**	106,5×47,1×17,2	OK075
2.0 Biturbo CDTI 4x4	06/10→	140	190	MN	(POCJ_61)/ 17"	[+]	**PF0724**	142×66,7×18,8		LG	Ø Disc 315	[+]	**PF0690**	106,5×47,1×17,2	OK075
2.0 CDTI	07/08→	81	110	LG		[+]	**PF0363**	184,7×65,8×17		LG	Ø Disc 292	[+]	**PF0690**	106,5×47,1×17,2	OK071
2.0 CDTI	06/10→	81	110	MN	(POCJ_60)/ 16"	[+]	**PF0723**	131,5×59,6×19		LG	Ø Disc 315	[+]	**PF0690**	106,5×47,1×17,2	OK075
2.0 CDTI	06/10→	81	110	MN	(POCJ_61)/ 17"	[+]	**PF0724**	142×66,7×18,8		LG	Ø Disc 315	[+]	**PF0690**	106,5×47,1×17,2	OK075
2.0 CDTI	03/12→	88	120	MN	17"/ POC-J61	[+]	**PF0724**	142×66,7×18,8		LG		[+]	**PF0690**	106,5×47,1×17,2	
2.0 CDTI	07/08→	96	131	LG		[+]	**PF0363**	184,7×65,8×17		LG	Ø Disc 292	[+]	**PF0690**	106,5×47,1×17,2	OK071
2.0 CDTI	06/10→	96	131	MN	(POCJ_60)/ 16"	[+]	**PF0723**	131,5×59,6×19		LG	Ø Disc 315	[+]	**PF0690**	106,5×47,1×17,2	OK075
2.0 CDTI	06/10→	96	131	MN	(POCJ_61)/ 17"	[+]	**PF0724**	142×66,7×18,8		LG	Ø Disc 315	[+]	**PF0690**	106,5×47,1×17,2	OK075
2.0 CDTI	07/13→	103	140	MN	17"/ POC-J61	[+]	**PF0724**	142×66,7×18,8		LG		[+]	**PF0690**	106,5×47,1×17,2	
2.0 CDTI	07/08→	118	160	LG		[+]	**PF0363**	184,7×65,8×17		LG	Ø Disc 292	[+]	**PF0690**	106,5×47,1×17,2	OK071
2.0 CDTI	06/10→	118	160	MN	(POCJ_60)/ 16"	[+]	**PF0723**	131,5×59,6×19		LG	Ø Disc 315	[+]	**PF0690**	106,5×47,1×17,2	OK075
2.0 CDTI	06/10→	118	160	MN	(POCJ_61)/ 17"	[+]	**PF0724**	142×66,7×18,8		LG	Ø Disc 315	[+]	**PF0690**	106,5×47,1×17,2	OK075
2.0 CDTI	07/13→	120	163	MN	17"/ POC-J61	[+]	**PF0724**	142×66,7×18,8		LG		[+]	**PF0690**	106,5×47,1×17,2	
2.0 CDTI 4x4	06/10→	118	160	LG		[+]	**PF0363**	184,7×65,8×17		LG	Ø Disc 292	[+]	**PF0690**	106,5×47,1×17,2	OK071

		KW	CV													
				SiS	i	W.i.	MAGNETI MARELLI	W×H×Th (mm)	Extra kit [Opt]	SiS	i	W.i.	MAGNETI MARELLI	W×H×Th (mm)	Extra kit [Opt]
OPEL																
Insignia Sports Tourer																
2.0 CDTI 4x4	06/10→	118	160	MN	(POCJ_60)/ 16"	[+]	**PF0723**	131,5×59,6×19		LG	Ø Disc 315	[+]	**PF0690**	106,5×47,1×17,2	OK075
2.0 CDTI 4x4	06/10→	118	160	MN	(POCJ_61)/ 17"	[+]	**PF0724**	142×66,7×18,8		LG	Ø Disc 315	[+]	**PF0690**	106,5×47,1×17,2	OK075
2.0 CDTI 4x4	07/13→	120	163	MN	17"/ POC-J61	[+]	**PF0724**	142×66,7×18,8		LG		[+]	**PF0690**	106,5×47,1×17,2	
2.0 E85 Turbo	09/10→	162	220	LG		[+]	**PF0363**	184,7×65,8×17		LG	Ø Disc 292	[+]	**PF0690**	106,5×47,1×17,2	OK071
2.0 E85 Turbo	06/10→	162	220	MN	(POCJ_60)/ 16"	[+]	**PF0723**	131,5×59,6×19		LG	Ø Disc 315	[+]	**PF0690**	106,5×47,1×17,2	OK075
2.0 E85 Turbo	06/10→	162	220	MN	(POCJ_61)/ 17"	[+]	**PF0724**	142×66,7×18,8		LG	Ø Disc 315	[+]	**PF0690**	106,5×47,1×17,2	OK075
2.0 Turbo	07/08→	162	220	LG		[+]	**PF0363**	184,7×65,8×17		LG	Ø Disc 292	[+]	**PF0690**	106,5×47,1×17,2	OK071
2.0 Turbo	06/10→	162	220	MN	(POCJ_60)/ 16"	[+]	**PF0723**	131,5×59,6×19		LG	Ø Disc 315	[+]	**PF0690**	106,5×47,1×17,2	OK075
2.0 Turbo	06/10→	162	220	MN	(POCJ_61)/ 17"	[+]	**PF0724**	142×66,7×18,8		LG	Ø Disc 315	[+]	**PF0690**	106,5×47,1×17,2	OK075
2.0 Turbo 4x4	07/08→	162	220	LG		[+]	**PF0363**	184,7×65,8×17		LG	Ø Disc 292	[+]	**PF0690**	106,5×47,1×17,2	OK071
2.0 Turbo 4x4	06/10→	162	220	MN	(POCJ_60)/ 16"	[+]	**PF0723**	131,5×59,6×19		LG	Ø Disc 315	[+]	**PF0690**	106,5×47,1×17,2	OK075
2.0 Turbo 4x4	06/10→	162	220	MN	(POCJ_61)/ 17"	[+]	**PF0724**	142×66,7×18,8		LG	Ø Disc 315	[+]	**PF0690**	106,5×47,1×17,2	OK075
2.8 V6 Turbo 4x4	10/08→	191	260	LG		[+]	**PF0363**	184,7×65,8×17		LG	Ø Disc 292	[+]	**PF0690**	106,5×47,1×17,2	OK071
2.8 V6 Turbo 4x4	06/10→	191	260	MN	(POCJ_60)/ 16"	[+]	**PF0723**	131,5×59,6×19		LG	Ø Disc 315	[+]	**PF0690**	106,5×47,1×17,2	OK075
2.8 V6 Turbo 4x4	06/10→	191	260	MN	(POCJ_61)/ 17"	[+]	**PF0724**	142×66,7×18,8		LG	Ø Disc 315	[+]	**PF0690**	106,5×47,1×17,2	OK075
2.8 V6 Turbo OPC 4x4	07/09→	239	325	LG		[+]	**PF0363**	184,7×65,8×17		LG	x OPC	[+]	**PF0690**	106,5×47,1×17,2	OK096
2.8 V6 Turbo OPC 4x4	07/09→	239	325	BR	Veicoli corazzati	[+]	**PF0502**	131,8×77,3×16,1		LG	x OPC	[+]	**PF0690**	106,5×47,1×17,2	OK096
2.8 V6 Turbo OPC 4x4	06/10→	239	325	MN	(POCJ_60)/ 16"	[+]	**PF0723**	131,5×59,6×19		LG	x OPC	[+]	**PF0690**	106,5×47,1×17,2	OK096
2.8 V6 Turbo OPC 4x4	06/10→	239	325	MN	(POCJ_61)/ 17"	[+]	**PF0724**	142×66,7×18,8		LG	x OPC	[+]	**PF0690**	106,5×47,1×17,2	OK096
Kadett D																
1.0	09/79→08/82	30	41	DM	(31_-34_, 41_-44_)	[-]	**PF0354**	100×59×15,6								
1.0	09/79→08/84	33	45	DM	(31_-34_, 41_-44_)	[-]	**PF0354**	100×59×15,6								
1.2	08/82→08/84	40	55	DM	(31_-34_, 41_-44_)	[-]	**PF0354**	100×59×15,6								
1.2	08/79→07/82	39	53	DM	(31_-34_, 41_-44_)	[-]	**PF0354**	100×59×15,6								

		KW	CV	SiS	i	W.i.	MAGNETI MARELLI	W×H×Th (mm)	Extra kit [Opt]	SiS	i	W.i.	MAGNETI MARELLI	W×H×Th (mm)	Extra kit [Opt]
OPEL															
Kadett D															
1.2 S	08/79 → 08/84	44	60	DM	(31_-34_, 41_-44_)	[-]	**PF0354**	100×59×15,6							
1.3 N	08/79 → 08/84	44	60	DM	(31_-34_, 41_-44_)	[-]	**PF0354**	100×59×15,6							
1.3 S	08/79 → 08/84	55	75	DM	(31_-34_, 41_-44_)	[-]	**PF0354**	100×59×15,6							
1.6	09/79 → 08/84	51	69	DM	(31_-34_, 41_-44_)	[-]	**PF0354**	100×59×15,6							
1.6	09/79 → 08/84	55	75	DM	(31_-34_, 41_-44_)	[-]	**PF0354**	100×59×15,6							
1.6 D	03/82 → 08/84	40	54	DM	(31_-34_, 41_-44_)	[-]	**PF0354**	100×59×15,6							
1.6 S	09/81 → 08/84	66	90	DM	(31_-34_, 41_-44_)	[-]	**PF0354**	100×59×15,6							
1.8 GT/E	02/83 → 08/84	85	115	DM	(31_-34_, 41_-44_)	[-]	**PF0354**	100×59×15,6							
Kadett D SW															
1.2	08/79 → 07/82	39	53	DM	(35_, 36_, 45_, 46_)	[-]	**PF0354**	100×59×15,6							
1.2 S	08/79 → 08/84	44	60	DM	(35_, 36_, 45_, 46_)	[-]	**PF0354**	100×59×15,6							
1.3 N	08/79 → 08/84	44	60	DM	(35_, 36_, 45_, 46_)	[-]	**PF0354**	100×59×15,6							
1.3 S	08/79 → 08/84	55	75	DM	(35_, 36_, 45_, 46_)	[-]	**PF0354**	100×59×15,6							
1.6	09/79 → 08/84	51	69	DM	(35_, 36_, 45_, 46_)	[-]	**PF0354**	100×59×15,6							
1.6	09/79 → 08/84	55	75	DM	(35_, 36_, 45_, 46_)	[-]	**PF0354**	100×59×15,6							
1.6 D	03/82 → 08/84	40	54	DM	(35_, 36_, 45_, 46_)	[-]	**PF0354**	100×59×15,6							
1.6 S	09/81 → 08/84	66	90	DM	(35_, 36_, 45_, 46_)	[-]	**PF0354**	100×59×15,6							
Kadett E															
1.2	84 → 91			DM		[-]	**PF0354**	100×59×15,6							
1.3	84 → 91			DM		[-]	**PF0354**	100×59×15,6							
1.4	84 → 91			DM		[-]	**PF0354**	100×59×15,6							
1.5 D	84 → 91			DM		[-]	**PF0354**	100×59×15,6							
1.6	84 → 91			DM		[-]	**PF0354**	100×59×15,6							
1.6i	84 → 91			DM		[-]	**PF0354**	100×59×15,6							
1.6 D	84 → 91			DM		[-]	**PF0354**	100×59×15,6							
1.7 D	84 → 91			DM		[-]	**PF0354**	100×59×15,6							
1.7 TD	84 → 91			DM		[-]	**PF0354**	100×59×15,6							
1.8i	84 → 91			DM		[-]	**PF0354**	100×59×15,6							

		KW	CV													
				SiS	i	W.i.	MAGNETI MARELLI	W×H×Th (mm)	Extra kit [Opt]	SiS	i	W.i.	MAGNETI MARELLI	W×H×Th (mm)	Extra kit [Opt]
OPEL															
Kadett E															
2.0i	84 → 91			DM		[-]	**PF0354**	100×59×15,6							
2.0i 16V GS	87 → 91									ATE		[-]	**PF0359**	61,7×57,5×15,5	
Manta B															
1.2	78 → 82			DM		[-]	**PF0354**	100×59×15,6							
1.3	78 → 82			DM		[-]	**PF0354**	100×59×15,6							
1.6	78 → 82			DM		[-]	**PF0354**	100×59×15,6							
1.8 GT	78 → 82			DM		[-]	**PF0354**	100×59×15,6							
1.9	78 → 82			DM		[-]	**PF0354**	100×59×15,6							
2.0	78 → 82			DM		[-]	**PF0354**	100×59×15,6							
Meriva															
1.3 CDTi	04/05 → 05/10			ATE		[+]	**PF0364**	155,1×69,7×20,5	OK056	LG		[-]	**PF0358**	95,4×42,7×15	OK039/ OK069
1.4 16V	07/04 → 05/10			LG		[+]	**PF0362**	131,8×51,4×17	OK012/ OK035/ OK036	LG		[+]	**PF0356**	95,4×42,7×15	OK039/ OK069
1.6i	03 → 05/10			LG		[+]	**PF0362**	131,8×51,4×17	OK012/ OK035/ OK036	LG		[+]	**PF0356**	95,4×42,7×15	OK039/ OK069
1.6i	03 → 05/10			LG		[+]	**PF0362**	131,8×51,4×17	OK012/ OK035/ OK036	LG		[-]	**PF0358**	95,4×42,7×15	OK039/ OK069
1.6i 16V	03 → 05/10			ATE	(XE)	[+]	**PF0364**	155,1×69,7×20,5	OK056	LG		[+]	**PF0356**	95,4×42,7×15	OK039/ OK069
1.6i 16V	03 → 05/10			ATE	(XE)	[+]	**PF0364**	155,1×69,7×20,5	OK056	LG		[-]	**PF0358**	95,4×42,7×15	OK039/ OK069
1.7 DT 16V	03 → 05/10			ATE		[+]	**PF0364**	155,1×69,7×20,5	OK056	LG		[+]	**PF0356**	95,4×42,7×15	OK039/ OK069
1.7 DT 16V	03 → 05/10			ATE		[+]	**PF0364**	155,1×69,7×20,5	OK056	LG		[-]	**PF0358**	95,4×42,7×15	OK039/ OK069
1.7 CDTi	09/03 → 05/10			ATE		[+]	**PF0364**	155,1×69,7×20,5	OK056	LG		[-]	**PF0358**	95,4×42,7×15	OK039/ OK069
1.8i 16V	03 → 05/10			ATE	(XE)	[+]	**PF0364**	155,1×69,7×20,5	OK056	LG		[+]	**PF0356**	95,4×42,7×15	OK039/ OK069
1.8i 16V	03 → 05/10			ATE	(XE)	[+]	**PF0364**	155,1×69,7×20,5	OK056	LG		[-]	**PF0358**	95,4×42,7×15	OK039/ OK069
Meriva B															
1.3 CDTI	06/10 →	55	75	ATE		[+]	**PF0364**	155,1×69,7×20,5	OK056	LG		[-]	**PF0358**	95,4×42,7×15	OK039/ OK069
1.3 CDTI	06/10 →	70	95	ATE		[+]	**PF0364**	155,1×69,7×20,5	OK056	LG		[-]	**PF0358**	95,4×42,7×15	OK039/ OK069
1.4	06/10 →	74	100	ATE		[+]	**PF0364**	155,1×69,7×20,5	OK056	LG		[-]	**PF0358**	95,4×42,7×15	OK039/ OK069
1.4	06/10 →	88	120	ATE		[+]	**PF0364**	155,1×69,7×20,5	OK056	LG		[-]	**PF0358**	95,4×42,7×15	OK039/ OK069

		KW	CV	SiS	i	W.i.	MAGNETI MARELLI	W×H×Th (mm)	Extra kit [Opt]	SiS	i	W.i.	MAGNETI MARELLI	W×H×Th (mm)	Extra kit [Opt]
OPEL															
Meriva B															
1.4	06/10→	103	140	ATE		[+]	**PF0364**	155,1×69,7×20,5	OK056	LG		[-]	**PF0358**	95,4×42,7×15	OK039/ OK069
1.4 LPG	06/11→	88	120	ATE		[+]	**PF0364**	155,1×69,7×20,5	OK056	LG		[-]	**PF0358**	95,4×42,7×15	OK039/ OK069
1.6 CDTi	08/13→	100	136	ATE		[+]	**PF0364**	155,1×69,7×20,5	OK056	LG		[-]	**PF0358**	95,4×42,7×15	OK039/ OK069
1.7 CDTI	06/10→	74	100	ATE		[+]	**PF0364**	155,1×69,7×20,5	OK056	LG		[-]	**PF0358**	95,4×42,7×15	OK039/ OK069
1.7 CDTI	06/10→	81	110	ATE		[+]	**PF0364**	155,1×69,7×20,5	OK056	LG		[-]	**PF0358**	95,4×42,7×15	OK039/ OK069
1.7 CDTI	06/10→	96	131	ATE		[+]	**PF0364**	155,1×69,7×20,5	OK056	LG		[-]	**PF0358**	95,4×42,7×15	OK039/ OK069
Mokka															
1.4	04/13→	103	140	ATE		[+]	**PF0424**	148×61,1×18,8		LG		[+]	**PF0433**	116,6×42,7×16,2	
1.4 LPG	04/13→	103	140	ATE		[+]	**PF0424**	148×61,1×18,8		LG		[+]	**PF0433**	116,6×42,7×16,2	
1.6	06/12→	85	116	ATE		[+]	**PF0424**	148×61,1×18,8		LG		[+]	**PF0433**	116,6×42,7×16,2	
1.8 4x4	01/13→	103	140	ATE		[+]	**PF0424**	148×61,1×18,8		LG		[+]	**PF0433**	116,6×42,7×16,2	
1.8	01/13→	103	140	ATE		[+]	**PF0424**	148×61,1×18,8		LG		[+]	**PF0433**	116,6×42,7×16,2	
1.7 CDTI	06/12→	96	131	ATE		[+]	**PF0424**	148×61,1×18,8		LG		[+]	**PF0433**	116,6×42,7×16,2	
1.7 CDTI	06/12→	96	131	ATE		[+]	**PF0424**	148×61,1×18,8		LG		[+]	**PF0433**	116,6×42,7×16,2	
Monterey A (UBS_)															
3.1 TD	09/91→07/98	84	114		(UBS69_)					ST		[+]	**PF0497**	109,5×42,5×16	
3.2	06/92→07/98	130	177		(UBS25_)					ST		[+]	**PF0497**	109,5×42,5×16	
Monza A															
1.8	86→88									ATE		[-]	**PF0367**	61,5×61×15	
1.8	86→88			DM		[-]	**PF0354**	100×59×15,6		ATE		[-]	**PF0368**	61,5×61×15	
1.8	88→93									ATE		[-]	**PF0368**	61,5×61×15	
1.8	86→88			DM		[-]	**PF0354**	100×59×15,6		ATE		[-]	**PF0368**	61,5×61×15	
2.0	86→88									ATE		[-]	**PF0367**	61,5×61×15	
2.0	86→88			DM		[-]	**PF0354**	100×59×15,6		ATE		[-]	**PF0368**	61,5×61×15	
2.0	88→93									ATE		[-]	**PF0368**	61,5×61×15	
2.3 D	86→88			DM		[-]	**PF0354**	100×59×15,6		ATE		[-]	**PF0368**	61,5×61×15	
2.3 D	86→88									ATE		[-]	**PF0367**	61,5×61×15	
2.3 D	88→93									ATE		[-]	**PF0368**	61,5×61×15	
2.3 TD	86→88			DM		[-]	**PF0354**	100×59×15,6		ATE		[-]	**PF0368**	61,5×61×15	
2.3 TD	86→88									ATE		[-]	**PF0367**	61,5×61×15	
2.3 TD	88→93									ATE		[-]	**PF0368**	61,5×61×15	
2.4	88→93									ATE		[-]	**PF0368**	61,5×61×15	
2.6	88→93									ATE		[-]	**PF0368**	61,5×61×15	
3.0	87→88									ATE		[-]	**PF0368**	61,5×61×15	
3.0	88→93									ATE		[-]	**PF0368**	61,5×61×15	
3.0i 24V	88→93									ATE		[-]	**PF0368**	61,5×61×15	
3.6i V6	88→93									ATE		[-]	**PF0368**	61,5×61×15	

		KW	CV												
				SiS	i	W.i.	MAGNETI MARELLI	W×H×Th (mm)	Extra kit [Opt]	SiS	i	W.i.	MAGNETI MARELLI	W×H×Th (mm)	Extra kit [Opt]
OPEL															
Movano															
1.9 DTi	98 → 01			BD		[-]	**PF0544**	138,7×66,4×18							
1.9 DTi	01 →			BSC		[-]	**PF0366**	138,8×79,8×17,8		BSC		[-]	**PF0365**	115×51,3×16,8	OK033
2.2 DTi	98 → 01			BD		[-]	**PF0544**	138,7×66,4×18							
2.2 DTi	01 →			BSC		[-]	**PF0366**	138,8×79,8×17,8		BSC		[-]	**PF0365**	115×51,3×16,8	OK033
2.5 D	98 → 01			BD		[-]	**PF0544**	138,7×66,4×18							
2.5 D	01 →			BSC		[-]	**PF0366**	138,8×79,8×17,8		BSC		[-]	**PF0365**	115×51,3×16,8	OK033
2.8 DTi	98 → 01			BD		[-]	**PF0544**	138,7×66,4×18							
2.8 DTi	01 →			BSC		[-]	**PF0366**	138,8×79,8×17,8		BSC		[-]	**PF0365**	115×51,3×16,8	OK033
Omega A SW															
1.8	86 → 88			DM		[-]	**PF0354**	100×59×15,6		ATE		[-]	**PF0368**	61,5×61×15	
1.8	88 → 93									ATE		[-]	**PF0368**	61,5×61×15	
2.0	86 → 88			DM		[-]	**PF0354**	100×59×15,6		ATE		[-]	**PF0368**	61,5×61×15	
2.0	88 → 93									ATE		[-]	**PF0368**	61,5×61×15	
2.3 D	86 → 88			DM		[-]	**PF0354**	100×59×15,6		ATE		[-]	**PF0368**	61,5×61×15	
2.3 D	88 → 93									ATE		[-]	**PF0368**	61,5×61×15	
2.3 TD	86 → 88			DM		[-]	**PF0354**	100×59×15,6		ATE		[-]	**PF0368**	61,5×61×15	
2.3 TD	88 → 93									ATE		[-]	**PF0368**	61,5×61×15	
2.4	88 → 93									ATE		[-]	**PF0368**	61,5×61×15	
2.6	88 → 93									ATE		[-]	**PF0368**	61,5×61×15	
3.0	87 → 88									ATE		[-]	**PF0368**	61,5×61×15	
3.0	88 → 93									ATE		[-]	**PF0368**	61,5×61×15	
3.0i 24V	88 → 93									ATE		[-]	**PF0368**	61,5×61×15	
3.6i V6	88 → 93									ATE		[-]	**PF0368**	61,5×61×15	
Omega B Berlina															
2.2i	94 → 03									ATE		[-]	**PF0367**	61,5×61×15	
2.5 TD	94 → 03									ATE		[-]	**PF0367**	61,5×61×15	
2.5i V6	94 → 03									ATE		[-]	**PF0367**	61,5×61×15	
3.0i V6 24V	94 → 03									ATE		[-]	**PF0367**	61,5×61×15	
Omega B SW															
2.2i	94 → 03									ATE		[-]	**PF0367**	61,5×61×15	
2.5 TD	94 → 03									ATE		[-]	**PF0367**	61,5×61×15	
2.5i V6	94 → 03									ATE		[-]	**PF0367**	61,5×61×15	
3.0i V6 24V	94 → 03									ATE		[-]	**PF0367**	61,5×61×15	
Rekord E Berlina / SW															
1.7	81 → 86			DM		[-]	**PF0354**	100×59×15,6							
1.8	81 → 86			DM		[-]	**PF0354**	100×59×15,6							
1.9	81 → 86			DM		[-]	**PF0354**	100×59×15,6							
2.0 D	81 → 86			DM		[-]	**PF0354**	100×59×15,6							
2.0	81 → 86			DM		[-]	**PF0354**	100×59×15,6							
2.2i	81 → 86			DM		[-]	**PF0354**	100×59×15,6							
2.3 D	81 → 86			DM		[-]	**PF0354**	100×59×15,6							
2.3 TD	81 → 86			DM		[-]	**PF0354**	100×59×15,6							

		KW	CV														
				SiS	i	W.i.	MAGNETI MARELLI	W×H×Th (mm)	Extra kit [Opt]	SiS	i	W.i.	MAGNETI MARELLI	W×H×Th (mm)	Extra kit [Opt]
OPEL															
Senator A															
2.0	83→86									ATE		[-]	**PF0368**	61,5×61×15	
2.2	83→86									ATE		[-]	**PF0368**	61,5×61×15	
2.3 TD	83→86									ATE		[-]	**PF0368**	61,5×61×15	
2.5	83→86									ATE		[-]	**PF0368**	61,5×61×15	
2.8	83→86									ATE		[-]	**PF0368**	61,5×61×15	
3.0	83→86									ATE		[-]	**PF0368**	61,5×61×15	
Senator B															
2.2 D	86→90									ATE		[-]	**PF0368**	61,5×61×15	
2.2 D	90→									ATE		[-]	**PF0368**	61,5×61×15	
2.2 TD	86→90									ATE		[-]	**PF0368**	61,5×61×15	
2.2 TD	90→									ATE		[-]	**PF0368**	61,5×61×15	
2.5	86→90									ATE		[-]	**PF0368**	61,5×61×15	
2.5	90→									ATE		[-]	**PF0368**	61,5×61×15	
2.6i	90→									ATE		[-]	**PF0368**	61,5×61×15	
3.0	86→90									ATE		[-]	**PF0368**	61,5×61×15	
3.0	90→									ATE		[-]	**PF0368**	61,5×61×15	
3.0i 24V	90→									ATE		[-]	**PF0368**	61,5×61×15	
3.6	86→90									ATE		[-]	**PF0368**	61,5×61×15	
3.6	90→									ATE		[-]	**PF0368**	61,5×61×15	
Signum															
1.8	05/03→	90	122	ATE		[o]	**PF0162**	155,2×69×20,2		ATE		[-]	**PF0431**	123,1×52×16,4	
1.8	05/03→	90	122	ATE	Tel. 61000001→	[o]	**PF0369**	155,2×69×20,2		ATE		[-]	**PF0431**	123,1×52×16,4	
1.8	09/05→	103	140	ATE		[o]	**PF0162**	155,2×69×20,2		ATE		[-]	**PF0431**	123,1×52×16,4	
1.8	09/05→	103	140	ATE	Tel. 61000001→	[o]	**PF0369**	155,2×69×20,2		ATE		[-]	**PF0431**	123,1×52×16,4	
1.9 CDTI	04/04→	88	120	ATE		[o]	**PF0162**	155,2×69×20,2		ATE		[-]	**PF0431**	123,1×52×16,4	
1.9 CDTI	04/04→	88	120	ATE	Tel. 61000001→	[o]	**PF0369**	155,2×69×20,2		ATE		[-]	**PF0431**	123,1×52×16,4	
1.9 CDTI	04/04→	110	150	ATE		[o]	**PF0162**	155,2×69×20,2		ATE		[-]	**PF0431**	123,1×52×16,4	
1.9 CDTI	04/04→	110	150	ATE	Tel. 61000001→	[o]	**PF0369**	155,2×69×20,2		ATE		[-]	**PF0431**	123,1×52×16,4	
1.9 CDTI	08/05→	74	100	ATE		[o]	**PF0162**	155,2×69×20,2		ATE		[-]	**PF0431**	123,1×52×16,4	
1.9 CDTI	08/05→	74	100	ATE	Tel. 61000001→	[o]	**PF0369**	155,2×69×20,2		ATE		[-]	**PF0431**	123,1×52×16,4	
2.0 DTI	05/03→	74	100	ATE		[o]	**PF0162**	155,2×69×20,2		ATE		[-]	**PF0431**	123,1×52×16,4	
2.0 DTI	05/03→	74	100	ATE	Tel. 61000001→	[o]	**PF0369**	155,2×69×20,2		ATE		[-]	**PF0431**	123,1×52×16,4	
2.0 Turbo	05/03→	129	175	ATE		[o]	**PF0162**	155,2×69×20,2		ATE		[-]	**PF0431**	123,1×52×16,4	
2.0 Turbo	05/03→	129	175	ATE	Tel. 61000001→	[o]	**PF0369**	155,2×69×20,2		ATE		[-]	**PF0431**	123,1×52×16,4	
2.2 direct	05/03→	114	155	ATE		[o]	**PF0162**	155,2×69×20,2		ATE		[-]	**PF0431**	123,1×52×16,4	
2.2 direct	05/03→	114	155	ATE	Tel. 61000001→	[o]	**PF0369**	155,2×69×20,2		ATE		[-]	**PF0431**	123,1×52×16,4	

		KW	CV	SiS	i	W.i.	MAGNETI MARELLI	W×H×Th (mm)	Extra kit [Opt]	SiS	i	W.i.	MAGNETI MARELLI	W×H×Th (mm)	Extra kit [Opt]
OPEL															
Signum															
2.2 DTI	05/03 →	92	125	ATE		[o]	**PF0162**	155,2×69×20,2		ATE		[-]	**PF0431**	123,1×52×16,4	
2.2 DTI	05/03 →	92	125	ATE	Tel. 61000001 →	[o]	**PF0369**	155,2×69×20,2		ATE		[-]	**PF0431**	123,1×52×16,4	
2.8	10/06 →	206	280	ATE		[o]	**PF0162**	155,2×69×20,2		ATE		[-]	**PF0431**	123,1×52×16,4	
2.8	10/06 →	206	280	ATE	Tel. 61000001 →	[o]	**PF0369**	155,2×69×20,2		ATE		[-]	**PF0431**	123,1×52×16,4	
2.8 V6 Turbo	09/05 →	169	230	ATE		[o]	**PF0162**	155,2×69×20,2		ATE		[-]	**PF0431**	123,1×52×16,4	
2.8 V6 Turbo	09/05 →	169	230	ATE	Tel. 61000001 →	[o]	**PF0369**	155,2×69×20,2		ATE		[-]	**PF0431**	123,1×52×16,4	
2.8 V6 Turbo	01/06 →	184	250	ATE		[o]	**PF0162**	155,2×69×20,2		ATE		[-]	**PF0431**	123,1×52×16,4	
2.8 V6 Turbo	01/06 →	184	250	ATE	Tel. 61000001 →	[o]	**PF0369**	155,2×69×20,2		ATE		[-]	**PF0431**	123,1×52×16,4	
3.0 V6 CDTI	05/03 →	130	177	ATE		[o]	**PF0612**	155×72,8×20,2		ATE		[-]	**PF0431**	123,1×52×16,4	
3.0 V6 CDTI	09/05 →	135	184	ATE		[o]	**PF0612**	155×72,8×20,2		ATE		[-]	**PF0431**	123,1×52×16,4	
3.2 V6	05/03 →	155	211	ATE		[o]	**PF0612**	155×72,8×20,2		ATE		[-]	**PF0431**	123,1×52×16,4	
Tigra (95_)															
1.4 16V	07/94 → 12/00	66	90	ATE		[-]	**PF0208**	140,1×48,4×16,5		ATE		[-]	**PF0367**	61,5×61×15	
1.4 16V	08/97 → 12/00	63	86	ATE		[-]	**PF0208**	140,1×48,4×16,5		ATE		[-]	**PF0367**	61,5×61×15	
1.6 16V	07/94 → 08/98	78	106	ATE		[-]	**PF0208**	140,1×48,4×16,5		ATE		[-]	**PF0367**	61,5×61×15	
1.6 16V	08/97 → 08/98	74	100	ATE		[-]	**PF0208**	140,1×48,4×16,5		ATE		[-]	**PF0367**	61,5×61×15	
Tigra Twin Top															
1.3 CDTI	06/04 →	51	69	LG		[+]	**PF0362**	131,8×51,4×17	OK012/ OK035/ OK036	LG	+Kit W.i.	[+]	**PF0552**	95,8×43,9×14	OK039/ OK069
1.4	06/04 →	66	90	LG		[+]	**PF0362**	131,8×51,4×17	OK012/ OK035/ OK036	LG	+Kit W.i.	[+]	**PF0552**	95,8×43,9×14	OK039/ OK069
1.8	06/04 →	92	125	LG		[+]	**PF0362**	131,8×51,4×17	OK012/ OK035/ OK036	LG	+Kit W.i.	[+]	**PF0552**	95,8×43,9×14	OK039/ OK069
Vectra A															
1.4	88 → 08/91			DM		[-]	**PF0354**	100×59×15,6							
1.4	08/91 → 07/92			ATE		[-]	**PF0208**	140,1×48,4×16,5							
1.6	88 → 08/91			DM		[-]	**PF0354**	100×59×15,6							
1.6	09/91 → 11/95			ATE		[-]	**PF0208**	140,1×48,4×16,5							
1.7 D	88 → 08/91			DM		[-]	**PF0354**	100×59×15,6							
1.7 D	09/91 → 11/95			ATE		[-]	**PF0208**	140,1×48,4×16,5							
1.7 TD	88 → 08/91			DM		[-]	**PF0354**	100×59×15,6							
1.7 TD	09/91 → 11/95			ATE		[-]	**PF0208**	140,1×48,4×16,5							
1.8	88 → 08/91			DM		[-]	**PF0354**	100×59×15,6							
1.8	09/91 → 11/95			ATE		[-]	**PF0208**	140,1×48,4×16,5							
2.0i	88 → 11/95									ATE		[-]	**PF0359**	61,7×57,5×15,5	
2.0i	88 → 11/95			ATE		[-]	**PF0205**	156,4×52,8×17		ATE		[-]	**PF0359**	61,7×57,5×15,5	
2.0i 16V	88 → 11/95									ATE		[-]	**PF0359**	61,7×57,5×15,5	

		KW	CV												
				SiS	i	W.i.	MAGNETI MARELLI	W×H×Th (mm)	Extra kit [Opt]	SiS	i	W.i.	MAGNETI MARELLI	W×H×Th (mm)	Extra kit [Opt]
OPEL															
Vectra A															
2.0i 16V	88 → 11/95			ATE		[-]	PF0205	156,4×52,8×17		ATE		[-]	PF0359	61,7×57,5×15,5	
Vectra B Berlina															
1.6i	95 → 03/99			ATE		[-]	PF0205	156,4×52,8×17		ATE		[-]	PF0368	61,5×61×15	
1.6i	95 → 03/99									ATE		[-]	PF0368	61,5×61×15	
1.6i	99 → 04/02			ATE		[-]	PF0360	156,4×74,2×20		ATE		[-]	PF0368	61,5×61×15	
1.6i 16V	95 → 03/99			ATE		[-]	PF0205	156,4×52,8×17		ATE		[-]	PF0368	61,5×61×15	
1.6i 16V	95 → 03/99									ATE		[-]	PF0368	61,5×61×15	
1.6i 16V	99 → 04/02			ATE		[-]	PF0360	156,4×74,2×20		ATE		[-]	PF0368	61,5×61×15	
1.7 TD	95 → 03/99			ATE		[-]	PF0205	156,4×52,8×17		ATE		[-]	PF0368	61,5×61×15	
1.7 TD	95 → 03/99									ATE		[-]	PF0368	61,5×61×15	
1.7 TD	99 → 04/02			ATE		[-]	PF0360	156,4×74,2×20		ATE		[-]	PF0368	61,5×61×15	
1.8i 16V	95 → 03/99		115	ATE		[-]	PF0205	156,4×52,8×17		ATE		[-]	PF0368	61,5×61×15	
1.8i 16V	95 → 03/99		115							ATE		[-]	PF0368	61,5×61×15	
1.8i 16V	99 → 04/02		115	ATE		[-]	PF0360	156,4×74,2×20		ATE		[-]	PF0368	61,5×61×15	
1.8i 16V	95 → 04/02		125	ATE		[-]	PF0360	156,4×74,2×20		ATE		[-]	PF0368	61,5×61×15	
2.0	95 → 03/99			ATE		[-]	PF0205	156,4×52,8×17		ATE		[-]	PF0368	61,5×61×15	
2.0	95 → 03/99									ATE		[-]	PF0368	61,5×61×15	
2.0	95 → 04/02			ATE		[-]	PF0360	156,4×74,2×20		ATE		[-]	PF0368	61,5×61×15	
2.0 Di	95 → 03/99			ATE		[-]	PF0205	156,4×52,8×17		ATE		[-]	PF0368	61,5×61×15	
2.0 Di	95 → 03/99									ATE		[-]	PF0368	61,5×61×15	
2.0 Di	99 → 04/02			ATE		[-]	PF0360	156,4×74,2×20		ATE		[-]	PF0368	61,5×61×15	
2.0 Dti	95 → 03/99			ATE		[-]	PF0205	156,4×52,8×17		ATE		[-]	PF0368	61,5×61×15	
2.0 Dti	95 → 03/99									ATE		[-]	PF0368	61,5×61×15	
2.0 Dti	99 → 04/02			ATE		[-]	PF0360	156,4×74,2×20		ATE		[-]	PF0368	61,5×61×15	
2.2i 16V	95 → 04/02			ATE		[-]	PF0360	156,4×74,2×20		ATE		[-]	PF0368	61,5×61×15	
2.5	95 → 04/02			ATE		[-]	PF0360	156,4×74,2×20		ATE		[-]	PF0368	61,5×61×15	
2.6i V6	95 → 04/02			ATE		[-]	PF0360	156,4×74,2×20		ATE		[-]	PF0368	61,5×61×15	
Vectra B SW															
1.6i	95 → 03/99			ATE		[-]	PF0205	156,4×52,8×17		ATE		[-]	PF0368	61,5×61×15	
1.6i	95 → 03/99									ATE		[-]	PF0368	61,5×61×15	
1.6i	99 → 04/02			ATE		[-]	PF0360	156,4×74,2×20		ATE		[-]	PF0368	61,5×61×15	
1.6i 16V	95 → 03/99			ATE		[-]	PF0205	156,4×52,8×17		ATE		[-]	PF0368	61,5×61×15	
1.6i 16V	95 → 03/99									ATE		[-]	PF0368	61,5×61×15	
1.6i 16V	99 → 04/02			ATE		[-]	PF0360	156,4×74,2×20		ATE		[-]	PF0368	61,5×61×15	
1.7 TD	95 → 03/99			ATE		[-]	PF0205	156,4×52,8×17		ATE		[-]	PF0368	61,5×61×15	
1.7 TD	95 → 03/99									ATE		[-]	PF0368	61,5×61×15	
1.7 TD	99 → 04/02			ATE		[-]	PF0360	156,4×74,2×20		ATE		[-]	PF0368	61,5×61×15	
1.8i 16V	95 → 03/99		115	ATE		[-]	PF0205	156,4×52,8×17		ATE		[-]	PF0368	61,5×61×15	
1.8i 16V	95 → 03/99		115							ATE		[-]	PF0368	61,5×61×15	
1.8i 16V	99 → 04/02		115	ATE		[-]	PF0360	156,4×74,2×20		ATE		[-]	PF0368	61,5×61×15	
1.8i 16V	95 → 04/02		125	ATE		[-]	PF0360	156,4×74,2×20		ATE		[-]	PF0368	61,5×61×15	
2.0	95 → 03/99			ATE		[-]	PF0205	156,4×52,8×17		ATE		[-]	PF0368	61,5×61×15	
2.0	95 → 03/99									ATE		[-]	PF0368	61,5×61×15	
2.0	99 → 04/02			ATE		[-]	PF0360	156,4×74,2×20		ATE		[-]	PF0368	61,5×61×15	

		KW	CV	SiS	i	W.i.	MAGNETI MARELLI	W×H×Th (mm)	Extra kit [Opt]	SiS	i	W.i.	MAGNETI MARELLI	W×H×Th (mm)	Extra kit [Opt]
OPEL															
Vectra B SW															
2.0 Di	95 → 03/99			ATE		[-]	**PF0205**	156,4×52,8×17		ATE		[-]	**PF0368**	61,5×61×15	
2.0 Di	95 → 03/99									ATE		[-]	**PF0368**	61,5×61×15	
2.0 Di	95 → 04/02			ATE		[-]	**PF0360**	156,4×74,2×20		ATE		[-]	**PF0368**	61,5×61×15	
2.0 Dti	95 → 03/99			ATE		[-]	**PF0205**	156,4×52,8×17		ATE		[-]	**PF0368**	61,5×61×15	
2.0 Dti	95 → 03/99									ATE		[-]	**PF0368**	61,5×61×15	
2.0 Dti	99 → 04/02			ATE		[-]	**PF0360**	156,4×74,2×20		ATE		[-]	**PF0368**	61,5×61×15	
2.2i 16V	96 → 04/02			ATE		[-]	**PF0360**	156,4×74,2×20		ATE		[-]	**PF0368**	61,5×61×15	
2.5	96 → 04/02			ATE		[-]	**PF0360**	156,4×74,2×20		ATE		[-]	**PF0368**	61,5×61×15	
2.6i V6	96 → 04/02			ATE		[-]	**PF0360**	156,4×74,2×20		ATE		[-]	**PF0368**	61,5×61×15	
Vectra C Berlina															
1.8 16V	08/02 →			ATE	15"	[o]	**PF0162**	155,2×69×20,2	OK025	ATE		[-]	**PF0349**	123,1×52×16,4	
1.8 16V	08/02 →			ATE	Tel. 61000001 →	[o]	**PF0369**	155,2×69×20,2	OK025	ATE		[-]	**PF0431**	123,1×52×16,4	
1.9 CDTi	04/04 →			ATE	15"	[o]	**PF0162**	155,2×69×20,2	OK025	ATE		[-]	**PF0349**	123,1×52×16,4	
1.9 CDTi	04/04 →			ATE	Tel. 61000001 →	[o]	**PF0369**	155,2×69×20,2	OK025	ATE		[-]	**PF0431**	123,1×52×16,4	
2.0 Dti 16V	08/02 →			ATE	15"	[o]	**PF0162**	155,2×69×20,2	OK025	ATE		[-]	**PF0349**	123,1×52×16,4	
2.0 Dti 16V	08/02 →			ATE	Tel. 61000001 →	[o]	**PF0369**	155,2×69×20,2	OK025	ATE		[-]	**PF0431**	123,1×52×16,4	
2.2	08/02 →			ATE	15"	[o]	**PF0162**	155,2×69×20,2	OK025	ATE		[-]	**PF0349**	123,1×52×16,4	
2.2	08/02 →			ATE	Tel. 61000001 →	[o]	**PF0369**	155,2×69×20,2	OK025	ATE		[-]	**PF0431**	123,1×52×16,4	
2.2 Dti 16V	08/02 →			ATE	15"	[o]	**PF0162**	155,2×69×20,2	OK025	ATE		[-]	**PF0349**	123,1×52×16,4	
2.2 Dti 16V	08/02 →			ATE	Tel. 61000001 →	[o]	**PF0369**	155,2×69×20,2	OK025	ATE		[-]	**PF0431**	123,1×52×16,4	
3.0 CDTi	03 →			ATE		[o]	**PF0612**	155×72,8×20,2		ATE		[-]	**PF0349**	123,1×52×16,4	
3.0 CDTi	03 →									ATE		[-]	**PF0431**	123,1×52×16,4	
3.2i V6	03 →			ATE		[o]	**PF0612**	155×72,8×20,2		ATE		[-]	**PF0349**	123,1×52×16,4	
3.2i V6	03 →									ATE		[-]	**PF0431**	123,1×52×16,4	
Vectra C SW															
1.8 16V	03 →			ATE	15"	[o]	**PF0162**	155,2×69×20,2	OK025	ATE		[-]	**PF0349**	123,1×52×16,4	
1.8 16V	03 →			ATE	Tel. 61000001 →	[o]	**PF0369**	155,2×69×20,2	OK025	ATE		[-]	**PF0431**	123,1×52×16,4	
1.9 CDTi	04/04 →			ATE	15"	[o]	**PF0162**	155,2×69×20,2	OK025	ATE		[-]	**PF0349**	123,1×52×16,4	
1.9 CDTi	04/04 →			ATE	Tel. 61000001 →	[o]	**PF0369**	155,2×69×20,2	OK025	ATE		[-]	**PF0431**	123,1×52×16,4	
2.0 Dti 16V	03 →			ATE	15"	[o]	**PF0162**	155,2×69×20,2	OK025	ATE		[-]	**PF0349**	123,1×52×16,4	
2.0 Dti 16V	03 →			ATE	Tel. 61000001 →	[o]	**PF0369**	155,2×69×20,2	OK025	ATE		[-]	**PF0431**	123,1×52×16,4	
2.2	03 →			ATE	15"	[o]	**PF0162**	155,2×69×20,2	OK025	ATE		[-]	**PF0349**	123,1×52×16,4	
2.2	03 →			ATE	Tel. 61000001 →	[o]	**PF0369**	155,2×69×20,2	OK025	ATE		[-]	**PF0431**	123,1×52×16,4	
2.2 Dti 16V	03 →			ATE	15"	[o]	**PF0162**	155,2×69×20,2	OK025	ATE		[-]	**PF0349**	123,1×52×16,4	

		KW	CV	SiS	i	W.i.	MAGNETI MARELLI	W×H×Th (mm)	Extra kit [Opt]	SiS	i	W.i.	MAGNETI MARELLI	W×H×Th (mm)	Extra kit [Opt]
OPEL															
Vectra C SW															
2.2 Dti 16V	03→			ATE	Tel. 61000001→	[o]	**PF0369**	155,2×69×20,2	OK025	ATE		[-]	**PF0431**	123,1×52×16,4	
3.0 CDTi	03→			ATE		[o]	**PF0612**	155×72,8×20,2		ATE		[-]	**PF0349**	123,1×52×16,4	
3.0 CDTi	03→			ATE		[o]	**PF0612**	155×72,8×20,2		ATE		[-]	**PF0431**	123,1×52×16,4	
3.2i V6	03→			ATE		[o]	**PF0612**	155×72,8×20,2		ATE		[-]	**PF0349**	123,1×52×16,4	
3.2i V6	03→			ATE		[o]	**PF0612**	155×72,8×20,2		ATE		[-]	**PF0431**	123,1×52×16,4	
Vectra GTS C															
1.8 16V	08/02→			ATE		[o]	**PF0162**	155,2×69×20,2	OK025	ATE		[-]	**PF0349**	123,1×52×16,4	
1.8 16V	08/02→			ATE	Tel. 61000001→	[o]	**PF0369**	155,2×69×20,2	OK025	ATE		[-]	**PF0431**	123,1×52×16,4	
1.9 CDTi	04/04→			ATE		[o]	**PF0162**	155,2×69×20,2	OK025	ATE		[-]	**PF0349**	123,1×52×16,4	
1.9 CDTi	04/04→			ATE	Tel. 61000001→	[o]	**PF0369**	155,2×69×20,2	OK025	ATE		[-]	**PF0431**	123,1×52×16,4	
2.0 16V	03/03→			ATE		[o]	**PF0162**	155,2×69×20,2	OK025	ATE		[-]	**PF0349**	123,1×52×16,4	
2.0 16V	03/03→			ATE	Tel. 61000001→	[o]	**PF0369**	155,2×69×20,2	OK025	ATE		[-]	**PF0431**	123,1×52×16,4	
2.0 dti 16V	08/02→			ATE		[o]	**PF0162**	155,2×69×20,2	OK025	ATE		[-]	**PF0349**	123,1×52×16,4	
2.0 dti 16V	08/02→			ATE	Tel. 61000001→	[o]	**PF0369**	155,2×69×20,2	OK025	ATE		[-]	**PF0431**	123,1×52×16,4	
2.2 16V	08/02→			ATE		[o]	**PF0162**	155,2×69×20,2	OK025	ATE		[-]	**PF0349**	123,1×52×16,4	
2.2 16V	08/02→			ATE	Tel. 61000001→	[o]	**PF0369**	155,2×69×20,2	OK025	ATE		[-]	**PF0431**	123,1×52×16,4	
2.2 dti 16V	08/02→			ATE		[o]	**PF0162**	155,2×69×20,2	OK025	ATE		[-]	**PF0349**	123,1×52×16,4	
2.2 dti 16V	08/02→			ATE	Tel. 61000001→	[o]	**PF0369**	155,2×69×20,2	OK025	ATE		[-]	**PF0431**	123,1×52×16,4	
3.0 CDTi	03→			ATE		[o]	**PF0612**	155×72,8×20,2		ATE		[-]	**PF0349**	123,1×52×16,4	
3.0 CDTi	03→			ATE		[o]	**PF0612**	155×72,8×20,2		ATE		[-]	**PF0431**	123,1×52×16,4	
3.2i V6	03→			ATE		[o]	**PF0612**	155×72,8×20,2		ATE		[-]	**PF0349**	123,1×52×16,4	
3.2i V6	03→			ATE		[o]	**PF0612**	155×72,8×20,2		ATE		[-]	**PF0431**	123,1×52×16,4	
Vivaro (E7) Piatto															
1.9 Di	08/06→	60	82	LG		[-]	**PF0371**	145,1×62,5×18,2	OK012	LG		[-]	**PF0370**	94,9×57,4×17	OK032
1.9 DTI	08/06→	74	101	LG		[-]	**PF0371**	145,1×62,5×18,2	OK012	LG		[-]	**PF0370**	94,9×57,4×17	OK032
2.0 16V	08/06→	88	120	LG		[-]	**PF0371**	145,1×62,5×18,2	OK012	LG		[-]	**PF0370**	94,9×57,4×17	OK032
2.0 CDTI	01/06→	66	90	LG		[-]	**PF0371**	145,1×62,5×18,2	OK012	LG		[-]	**PF0370**	94,9×57,4×17	OK032
2.0 CDTI	08/06→	84	114	LG		[-]	**PF0371**	145,1×62,5×18,2	OK012	LG		[-]	**PF0370**	94,9×57,4×17	OK032
2.0 ECOTEC	08/06→	86	117	LG		[-]	**PF0371**	145,1×62,5×18,2	OK012	LG		[-]	**PF0370**	94,9×57,4×17	OK032
2.5 CDTI	08/06→	84	114	LG		[-]	**PF0371**	145,1×62,5×18,2	OK012	LG		[-]	**PF0370**	94,9×57,4×17	OK032
2.5 CDTI	08/06→	107	146	LG		[-]	**PF0371**	145,1×62,5×18,2	OK012	LG		[-]	**PF0370**	94,9×57,4×17	OK032
2.5 DTi	08/06→	99	135	LG		[-]	**PF0371**	145,1×62,5×18,2	OK012	LG		[-]	**PF0370**	94,9×57,4×17	OK032
Vivaro (J7) Combi															
1.9 DI	08/01→	60	80	LG		[-]	**PF0371**	145,1×62,5×18,2	OK012	LG		[-]	**PF0370**	94,9×57,4×17	OK032
1.9 DTI	08/01→	74	101	LG		[-]	**PF0371**	145,1×62,5×18,2	OK012	LG		[-]	**PF0370**	94,9×57,4×17	OK032
2.0 16V	08/01→	88	120	LG		[-]	**PF0371**	145,1×62,5×18,2	OK012	LG		[-]	**PF0370**	94,9×57,4×17	OK032
2.0 CDTI	08/06→	66	90	LG		[-]	**PF0371**	145,1×62,5×18,2	OK012	LG		[-]	**PF0370**	94,9×57,4×17	OK032

		KW	CV												
				SiS	i	W.i.	MAGNETI MARELLI	W×H×Th (mm)	Extra kit [Opt]	SiS	i	W.i.	MAGNETI MARELLI	W×H×Th (mm)	Extra kit [Opt]
OPEL															
Vivaro (J7) Combi															
2.0 CDTI	08/06→	84	114	LG		[-]	**PF0371**	145,1×62,5×18,2	OK012	LG		[-]	**PF0370**	94,9×57,4×17	OK032
2.0 ECOTEC	08/06→	86	117	LG		[-]	**PF0371**	145,1×62,5×18,2	OK012	LG		[-]	**PF0370**	94,9×57,4×17	OK032
2.5 CDTI	08/06→	107	146	LG		[-]	**PF0371**	145,1×62,5×18,2	OK012	LG		[-]	**PF0370**	94,9×57,4×17	OK032
2.5 CDTI	08/06→	84	114	LG		[-]	**PF0371**	145,1×62,5×18,2	OK012	LG		[-]	**PF0370**	94,9×57,4×17	OK032
2.5 DTI	05/03→	99	135	LG		[-]	**PF0371**	145,1×62,5×18,2	OK012	LG		[-]	**PF0370**	94,9×57,4×17	OK032
Vivaro (F7) Van															
1.9 DI	08/01→	60	80	LG		[-]	**PF0371**	145,1×62,5×18,2	OK012	LG		[-]	**PF0370**	94,9×57,4×17	OK032
1.9 DTI	08/01→	74	101	LG		[-]	**PF0371**	145,1×62,5×18,2	OK012	LG		[-]	**PF0370**	94,9×57,4×17	OK032
2.0 16V	08/01→	88	120	LG		[-]	**PF0371**	145,1×62,5×18,2	OK012	LG		[-]	**PF0370**	94,9×57,4×17	OK032
2.0 CDTI	08/06→	66	90	LG		[-]	**PF0371**	145,1×62,5×18,2	OK012	LG		[-]	**PF0370**	94,9×57,4×17	OK032
2.0 CDTI	08/06→	84	114	LG		[-]	**PF0371**	145,1×62,5×18,2	OK012	LG		[-]	**PF0370**	94,9×57,4×17	OK032
2.0 ECOTEC	08/06→	86	117	LG		[-]	**PF0371**	145,1×62,5×18,2	OK012	LG		[-]	**PF0370**	94,9×57,4×17	OK032
2.5 CDTI	08/06→	107	146	LG		[-]	**PF0371**	145,1×62,5×18,2	OK012	LG		[-]	**PF0370**	94,9×57,4×17	OK032
2.5 CDTI	08/06→	84	114	LG		[-]	**PF0371**	145,1×62,5×18,2	OK012	LG		[-]	**PF0370**	94,9×57,4×17	OK032
2.5 DTI	05/03→	99	135	LG		[-]	**PF0371**	145,1×62,5×18,2	OK012	LG		[-]	**PF0370**	94,9×57,4×17	OK032
Zafira I (F75)															
1.6i 16V CD	99→05			ATE		[+]	**PF0523**	155,4×71,5×19,5		BSC	+8 molle/ springs	[+]	**PF0357**	104,8×42,7×16,5	OK034
1.6i 16V CDX	99→05			ATE		[+]	**PF0523**	155,4×71,5×19,5		BSC	+8 molle/ springs	[+]	**PF0357**	104,8×42,7×16,5	OK034
1.6i 16V	06/01→05			ATE		[+]	**PF0523**	155,4×71,5×19,5		LG		[+]	**PF0356**	95,4×42,7×15	OK039/ OK069
1.6i 16V	07/01→05			ATE		[+]	**PF0523**	155,4×71,5×19,5		LG		[-]	**PF0358**	95,4×42,7×15	OK039/ OK069
1.6i CNG	09/01→05			ATE		[+]	**PF0523**	155,4×71,5×19,5		LG		[+]	**PF0356**	95,4×42,7×15	OK039/ OK069
1.8i 16V CDX	99→05			ATE		[+]	**PF0523**	155,4×71,5×19,5		BSC	+8 molle/ springs	[+]	**PF0357**	104,8×42,7×16,5	OK034
1.8i 16V	06/01→05			ATE		[+]	**PF0523**	155,4×71,5×19,5		LG		[+]	**PF0356**	95,4×42,7×15	OK039/ OK069
1.8i 16V	07/01→05			ATE		[+]	**PF0523**	155,4×71,5×19,5		LG		[-]	**PF0358**	95,4×42,7×15	OK039/ OK069
2.0i 16V Di CD/CDX	99→05			ATE		[+]	**PF0523**	155,4×71,5×19,5		BSC	+8 molle/ springs	[+]	**PF0357**	104,8×42,7×16,5	OK034
2.0 Di 16V	06/01→05			ATE		[+]	**PF0523**	155,4×71,5×19,5		LG		[+]	**PF0356**	95,4×42,7×15	OK039/ OK069
2.0 Di 16V	07/01→05			ATE		[+]	**PF0523**	155,4×71,5×19,5		LG		[-]	**PF0358**	95,4×42,7×15	OK039/ OK069
2.0 OPC	11/02→05			ATE		[+]	**PF0386**	156,4×74,2×20		LG		[+]	**PF0356**	95,4×42,7×15	OK039/ OK069
2.0 OPC	11/02→05			ATE		[+]	**PF0386**	156,4×74,2×20		BSC	+8 molle/ springs	[+]	**PF0357**	104,8×42,7×16,5	OK034
2.2	00→05			ATE		[+]	**PF0523**	155,4×71,5×19,5		BSC	+8 molle/ springs	[+]	**PF0357**	104,8×42,7×16,5	OK034

		KW	CV	SiS	i	W.i.	MAGNETI MARELLI	W×H×Th (mm)	Extra kit [Opt]	SiS	i	W.i.	MAGNETI MARELLI	W×H×Th (mm)	Extra kit [Opt]
OPEL															
Zafira I (F75)															
2.2 Dti 16V	06/01 → 05			ATE		[+]	**PF0523**	155,4×71,5×19,5		LG		[+]	**PF0356**	95,4×42,7×15	OK039/ OK069
2.2 Dti 16V	07/01 → 05			ATE		[+]	**PF0523**	155,4×71,5×19,5		BSC	+8 molle/ springs	[+]	**PF0357**	104,8×42,7×16,5	OK034
2.2 Dti 16V	07/01 → 05			ATE		[+]	**PF0523**	155,4×71,5×19,5		LG		[-]	**PF0358**	95,4×42,7×15	OK039/ OK069
2.2i 16V	06/01 → 05			ATE		[+]	**PF0523**	155,4×71,5×19,5		LG		[+]	**PF0356**	95,4×42,7×15	OK039/ OK069
2.2i 16V	07/01 → 05			ATE		[+]	**PF0523**	155,4×71,5×19,5		LG		[-]	**PF0358**	95,4×42,7×15	OK039/ OK069
2.2i 16V	07/01 → 05			ATE		[+]	**PF0523**	155,4×71,5×19,5		BSC	+8 molle/ springs	[+]	**PF0357**	104,8×42,7×16,5	OK034
Zafira II (A05)															
1.6	07/05 →	77	105	ATE		[+]	**PF0364**	155,1×69,7×20,5	OK056	LG		[-]	**PF0358**	95,4×42,7×15	OK039/ OK069
1.6	01/06 →	69	94	ATE		[+]	**PF0364**	155,1×69,7×20,5	OK056	LG		[-]	**PF0358**	95,4×42,7×15	OK039/ OK069
1.6	01/08 →	85	115	ATE		[+]	**PF0364**	155,1×69,7×20,5	OK056	LG		[-]	**PF0358**	95,4×42,7×15	OK039/ OK069
1.6 CNG	07/05 →	69	94	ATE		[+]	**PF0364**	155,1×69,7×20,5	OK056	LG		[-]	**PF0358**	95,4×42,7×15	OK039/ OK069
1.6 CNG Turbo	02/09 →	110	150	ATE		[+]	**PF0364**	155,1×69,7×20,5	OK056	LG		[-]	**PF0358**	95,4×42,7×15	OK039/ OK069
1.7 CDTI	01/08 →	81	110	ATE		[+]	**PF0364**	155,1×69,7×20,5	OK056	LG		[-]	**PF0358**	95,4×42,7×15	OK039/ OK069
1.7 CDTI	01/08 →	92	125	ATE		[+]	**PF0364**	155,1×69,7×20,5	OK056	LG		[-]	**PF0358**	95,4×42,7×15	OK039/ OK069
1.8	07/05 →	103	140	ATE		[+]	**PF0364**	155,1×69,7×20,5	OK056	LG		[-]	**PF0358**	95,4×42,7×15	OK039/ OK069
1.9 CDTI	07/05 →	110	150	ATE		[+]	**PF0364**	155,1×69,7×20,5	OK056	LG		[-]	**PF0358**	95,4×42,7×15	OK039/ OK069
1.9 CDTI	07/05 →	74	100	ATE		[+]	**PF0364**	155,1×69,7×20,5	OK056	LG		[-]	**PF0358**	95,4×42,7×15	OK039/ OK069
1.9 CDTI	07/05 →	88	120	ATE		[+]	**PF0364**	155,1×69,7×20,5	OK056	LG		[-]	**PF0358**	95,4×42,7×15	OK039/ OK069
2.0	07/05 →	125	170	ATE		[+]	**PF0364**	155,1×69,7×20,5	OK056	LG		[-]	**PF0358**	95,4×42,7×15	OK039/ OK069
2.0	07/05 →	147	200	ATE		[+]	**PF0364**	155,1×69,7×20,5	OK056	LG		[-]	**PF0358**	95,4×42,7×15	OK039/ OK069
2.0	01/06 →	177	241	ATE		[+]	**PF0364**	155,1×69,7×20,5	OK056	LG		[-]	**PF0358**	95,4×42,7×15	OK039/ OK069
2.2	07/05 →	110	150	ATE		[+]	**PF0364**	155,1×69,7×20,5	OK056	LG		[-]	**PF0358**	95,4×42,7×15	OK039/ OK069

		KW	CV	SiS	i	W.i.	MAGNETI MARELLI	W×H×Th (mm)	Extra kit [Opt]	SiS	i	W.i.	MAGNETI MARELLI	W×H×Th (mm)	Extra kit [Opt]
OPEL															
Zafira (P12)															
1.4	10/11→	88	120	ATE	Ø Disc 300	[+]	**PF0424**	148×61,1×18,8		LG		[+]	**PF0433**	116,6×42,7×16,2	
1.4	10/11→	88	120	MN	Ø Disc 321	[+]	**PF0724**	142×66,7×18,8		LG		[+]	**PF0433**	116,6×42,7×16,2	
1.4	10/11→	103	140	ATE	Ø Disc 300	[+]	**PF0424**	148×61,1×18,8		LG		[+]	**PF0433**	116,6×42,7×16,2	
1.4	10/11→	103	140	MN	Ø Disc 321	[+]	**PF0724**	142×66,7×18,8		LG		[+]	**PF0433**	116,6×42,7×16,2	
1.8	10/11→	103	140	ATE	Ø Disc 300	[+]	**PF0424**	148×61,1×18,8		LG		[+]	**PF0433**	116,6×42,7×16,2	
1.8	10/11→	103	140	MN	Ø Disc 321	[+]	**PF0724**	142×66,7×18,8		LG		[+]	**PF0433**	116,6×42,7×16,2	
1.8	10/11→	88	120	ATE	Ø Disc 300	[+]	**PF0424**	148×61,1×18,8		LG		[+]	**PF0433**	116,6×42,7×16,2	
1.8	10/11→	88	120	MN	Ø Disc 321	[+]	**PF0724**	142×66,7×18,8		LG		[+]	**PF0433**	116,6×42,7×16,2	
2.0 CDTi	10/11→	118	160	ATE	Ø Disc 300	[+]	**PF0424**	148×61,1×18,8		LG		[+]	**PF0433**	116,6×42,7×16,2	
2.0 CDTi	10/11→	118	160	MN	Ø Disc 321	[+]	**PF0724**	142×66,7×18,8		LG		[+]	**PF0433**	116,6×42,7×16,2	
2.0 CDTi	10/11→	121	165	ATE	Ø Disc 300	[+]	**PF0424**	148×61,1×18,8		LG		[+]	**PF0433**	116,6×42,7×16,2	
2.0 CDTi	10/11→	121	165	MN	Ø Disc 321	[+]	**PF0724**	142×66,7×18,8		LG		[+]	**PF0433**	116,6×42,7×16,2	
2.0 CDTi	10/11→	96	130	ATE	Ø Disc 300	[+]	**PF0424**	148×61,1×18,8		LG		[+]	**PF0433**	116,6×42,7×16,2	
2.0 CDTi	10/11→	96	130	MN	Ø Disc 321	[+]	**PF0724**	142×66,7×18,8		LG		[+]	**PF0433**	116,6×42,7×16,2	
Zafira Van (A05)															
1.6 CNG Turbo	02/09→	110	150	ATE		[+]	**PF0364**	155,1×69,7×20,5	OK056	LG		[-]	**PF0358**	95,4×42,7×15	OK039/ OK069
1.7 CDTI	01/08→	81	110	ATE		[+]	**PF0364**	155,1×69,7×20,5	OK056	LG		[-]	**PF0358**	95,4×42,7×15	OK039/ OK069
1.8	07/05→	103	140	ATE		[+]	**PF0364**	155,1×69,7×20,5	OK056	LG		[-]	**PF0358**	95,4×42,7×15	OK039/ OK069
PERODUA															
Kenari (L9_)															
1.0	10/00→	41	56	AK		[+]	**PF0209**	115,5×49,6×15,3							
PEUGEOT															
106															
1.0i	00→04			BD		[+]	**PF0168**	105×54,3×18							
1.1i	91→96			ATE	+ABS	[+]	**PF0196**	141,4×47,5×17,2							
1.1i	00→04			BD		[+]	**PF0168**	105×54,3×18							
1.3i Rallye	93→04			BD		[+]	**PF0168**	105×54,3×18							
1.4i XT/XS	91→95			BD		[+]	**PF0168**	105×54,3×18							
1.4i	91→96			ATE	+ABS	[+]	**PF0196**	141,4×47,5×17,2							
1.4i D XRD	91→95			BD		[+]	**PF0168**	105×54,3×18							
1.4 D	91→96			ATE	+ABS	[+]	**PF0196**	141,4×47,5×17,2							
1.4i	00→04			BD	+ABS	[+]	**PF0168**	105×54,3×18							
1.5 D	91→96			ATE	+ABS	[+]	**PF0196**	141,4×47,5×17,2							
1.5 D	94→04			BD		[+]	**PF0168**	105×54,3×18							
1.5 TD	94→04			BD		[+]	**PF0168**	105×54,3×18							
1.5 D	00→04			BD	+ABS	[+]	**PF0168**	105×54,3×18							
1.6i	91→96			ATE	+ABS	[+]	**PF0196**	141,4×47,5×17,2							
1.6i S 16V	91→96			ATE		[+]	**PF0196**	141,4×47,5×17,2							
1.6i XS 16V	95→04			BD		[+]	**PF0168**	105×54,3×18							

		KW	CV	SiS	i	W.i.	MAGNETI MARELLI	W×H×Th (mm)	Extra kit [Opt]	SiS	i	W.i.	MAGNETI MARELLI	W×H×Th (mm)	Extra kit [Opt]
PEUGEOT															
106															
1.6i	96→04			CT	+AUT	[-]	**PF0166**	71,8×60,6×17							
1.6i Rallye	96→04			CT		[-]	**PF0166**	71,8×60,6×17							
106 Van															
1.6 D Multi Van	91→			BD		[+]	**PF0168**	105×54,3×18							
107															
1.0	06/05→	50	68	BSC		[-]	**PF0172**	122,9×46,9×17,6	OK012						
1.4 HDi	06/05→	40	54	BSC		[-]	**PF0172**	122,9×46,9×17,6	OK012						
205															
1.0	87→92			BD		[+]	**PF0372**	105×54,3×18							
1.1	83→93			BD		[+]	**PF0168**	105×54,3×18							
1.4	83→93			BD		[+]	**PF0168**	105×54,3×18							
1.6	86→93			BD	+AUT	[+]	**PF0168**	105×54,3×18							
1.6i GTI	83→86			BD		[+]	**PF0168**	105×54,3×18		BD	+ Rear Disc	[-]	**PF0197**	105×56×11	
1.6i GTI	83→86									BD	+ Rear Disc	[-]	**PF0197**	105×56×11	
1.6i GTI - Cabrio	86→93			BD		[+]	**PF0168**	105×54,3×18		BD	+ Rear Disc	[-]	**PF0197**	105×56×11	
1.6i GTI - Cabrio	86→93									BD	+ Rear Disc	[-]	**PF0197**	105×56×11	
1.8 T. 16V	84→									BD	+ Rear Disc	[-]	**PF0197**	105×56×11	
1.8 D - TD	83→93			BD		[+]	**PF0168**	105×54,3×18		BD	+ Rear Disc	[-]	**PF0197**	105×56×11	
1.8 D - TD	83→93									BD	+ Rear Disc	[-]	**PF0197**	105×56×11	
1.9 D	90→93									BD	+ Rear Disc	[-]	**PF0197**	105×56×11	
1.9 D	90→93			BD		[+]	**PF0168**	105×54,3×18		BD	+ Rear Disc	[-]	**PF0197**	105×56×11	
1.9i 4WD	89→									BD	+ Rear Disc	[-]	**PF0197**	105×56×11	
1.9i GTI	87→									BD	+ Rear Disc	[-]	**PF0197**	105×56×11	
1.9i GTI	86→93									BD	+ Rear Disc	[-]	**PF0197**	105×56×11	
Cabrio CTI	86→93									BD	+ Rear Disc	[-]	**PF0197**	105×56×11	
GT 1.9	88→									BD	+ Rear Disc	[-]	**PF0197**	105×56×11	
All types	88→			BD		[+]	**PF0372**	105×54,3×18							
205 Van															
1.1	85→			BD		[+]	**PF0372**	105×54,3×18							
1.8 D	85→			BD		[+]	**PF0372**	105×54,3×18							
206 3 Volumi/Berlina															
1.4	03/07→	55	75	BSC	+8 molle/ springs	[-]	**PF0201**	130,9×47,2×18	OK012						
1.4 HDi eco 70	09/08→	50	68	BSC	+8 molle/ springs	[-]	**PF0201**	130,9×47,2×18	OK012						
1.6 16V	03/07→	80	109	BSC	+8 molle/ springs	[-]	**PF0201**	130,9×47,2×18	OK012						

		KW	CV												
				SiS	i	W.i.	MAGNETI MARELLI	W×H×Th (mm)	Extra kit [Opt]	SiS	i	W.i.	MAGNETI MARELLI	W×H×Th (mm)	Extra kit [Opt]
PEUGEOT															
206															
1.1 XR - XT	98 → 07/00			BSC		[-]	**PF0512**	130,8×47,5×18	OK034						
1.1	04/00 → 09			BSC	+8 molle/ springs/- ABS	[-]	**PF0201**	130,9×47,2×18	OK012						
1.4 XS - XR - XT	98 → 07/00			BSC		[-]	**PF0512**	130,8×47,5×18	OK034						
1.4	08/00 → 09			BSC	+8 molle/ springs/- ABS	[-]	**PF0201**	130,9×47,2×18	OK012						
1.4	03/01 → 09			BSC	Vented Disc	[-]	**PF0174**	136,9×51,6×19	OK012/ OK038						
1.4 Hdi	09/01 → 09			BSC	+8 molle/ springs	[-]	**PF0201**	130,9×47,2×18	OK012						
1.6 XS - XT	98 → 07/00			BSC		[-]	**PF0512**	130,8×47,5×18	OK034						
1.6	08/00 → 08/02			BSC	+8 molle/ springs/- ABS	[-]	**PF0201**	130,9×47,2×18	OK012						
1.6 16V	12/00 → 09	80		BSC	Vented Disc	[-]	**PF0174**	136,9×51,6×19	OK012/ OK038	BD		[-]	**PF0790**	105×56×11	
1.6 16V	12/00 → 09	80		BSC	Vented Disc	[-]	**PF0537**	130,9×52,2×17,8	OK034	BD		[-]	**PF0790**	105×56×11	
1.6i 16V	05/01 → 09			BSC	8 springs	[-]	**PF0538**	130,9×52,2×18	OK034						
1.6 Hdi	05/04 → 09		110	BSC		[-]	**PF0170**	136,9×51,6×19	OK012/ OK038	BD		[-]	**PF0790**	105×56×11	
1.9 D - XRD - XTD	98 → 07/00			BSC		[-]	**PF0512**	130,8×47,5×18	OK034						
1.9 D	03/00 → 08/02			BSC	+8 molle/ springs/- ABS	[-]	**PF0201**	130,9×47,2×18	OK012						
2.0 16V GT	99 → 09			BSC		[-]	**PF0512**	130,8×47,5×18	OK034	BD		[-]	**PF0790**	105×56×11	
2.0 16V Gti	99 → 09			BSC		[-]	**PF0512**	130,8×47,5×18	OK034	BD		[-]	**PF0790**	105×56×11	
2.0 16V	98 → 09			BSC		[-]	**PF0537**	130,9×52,2×17,8	OK034	BD		[-]	**PF0790**	105×56×11	
2.0 16V	03/01 → 09			BSC	Vented Disc	[-]	**PF0174**	136,9×51,6×19	OK012/ OK038	BD		[-]	**PF0790**	105×56×11	
2.0i 16V	05/01 → 09			BSC	+8 molle/ springs	[-]	**PF0538**	130,9×52,2×18	OK034	BD		[-]	**PF0790**	105×56×11	
2.0 Gti 16V	98 → 09			BSC		[-]	**PF0537**	130,9×52,2×17,8	OK034	BD		[-]	**PF0197**	105×56×11	
2.0 Hdi	05/01 → 09		90	BSC	+8 molle/ springs	[-]	**PF0538**	130,9×52,2×18	OK034	BD		[-]	**PF0790**	105×56×11	
2.0 Hdi	03/01 → 09			BSC	Vented Disc	[-]	**PF0174**	136,9×51,6×19	OK012/ OK038	BD		[-]	**PF0790**	105×56×11	
2.0 RC	07/03 → 09			BSC		[-]	**PF0176**	136,9×57×19	OK012/ OK038	BD		[-]	**PF0790**	105×56×11	

		KW	CV	SiS	i	W.i.	MAGNETI MARELLI	W×H×Th (mm)	Extra kit [Opt]	SiS	i	W.i.	MAGNETI MARELLI	W×H×Th (mm)	Extra kit [Opt]
PEUGEOT															
206 CC (2D)															
1.6 16V	09/00→	80	109	BSC		[-]	**PF0537**	130,9×52,2×17,8	OK034						
1.6 16V	09/00→	80	109	BSC		[-]	**PF0174**	136,9×51,6×19	OK012/ OK038						
1.6 HDi 110	04/05→	80	109	BSC		[-]	**PF0537**	130,9×52,2×17,8	OK034						
1.6 HDi 110	04/05→	80	109	BSC		[-]	**PF0174**	136,9×51,6×19	OK012/ OK038						
2.0 S16	09/00→	100	136	BSC		[-]	**PF0537**	130,9×52,2×17,8	OK034						
2.0 S16	09/00→	100	136	BSC	Vented Disc	[-]	**PF0174**	136,9×51,6×19	OK012/ OK038						
206+ (T3E)															
1.1	01/09→	44	60	BSC	+8 molle/ springs	[-]	**PF0201**	130,9×47,2×18	OK012						
1.4 HDi eco 70	01/09→	50	68	BSC	+8 molle/ springs	[-]	**PF0201**	130,9×47,2×18	OK012						
1.4 i	09/10→	54	73	BSC	+8 molle/ springs	[-]	**PF0201**	130,9×47,2×18	OK012						
1.4 i	01/09→	55	75	BSC	+8 molle/ springs	[-]	**PF0201**	130,9×47,2×18	OK012						
207 Berlina (WA_WC)															
1.4	02/06→	53	72	BSC		[-]	**PF0174**	136,9×51,6×19	OK012/ OK038	BSC		[-]	**PF0179**	95×46,9×17,6	OK012
1.4 16V	02/06→	65	88	BSC		[-]	**PF0174**	136,9×51,6×19	OK012/ OK038	BSC		[-]	**PF0179**	95×46,9×17,6	OK012
1.4 16V	06/07→	70	95	BSC		[-]	**PF0174**	136,9×51,6×19	OK012/ OK038	BSC		[-]	**PF0179**	95×46,9×17,6	OK012
1.4 Bioflex	01/09→	60	82	BSC		[-]	**PF0174**	136,9×51,6×19	OK012/ OK038	BSC		[-]	**PF0179**	95×46,9×17,6	OK012
1.4 HDi	02/06→	50	68	BSC		[-]	**PF0174**	136,9×51,6×19	OK012/ OK038	BSC		[-]	**PF0179**	95×46,9×17,6	OK012
1.6 16V	02/06→	80	109	BSC		[-]	**PF0176**	136,9×57×19	OK012/ OK038	BSC		[-]	**PF0179**	95×46,9×17,6	OK012
1.6 16V RC	02/07→	128	174	BSC		[-]	**PF0176**	136,9×57×19	OK012/ OK038	BSC		[-]	**PF0179**	95×46,9×17,6	OK012
1.6 16V Turbo	02/06→	110	150	BSC		[-]	**PF0176**	136,9×57×19	OK012/ OK038	BSC		[-]	**PF0179**	95×46,9×17,6	OK012
1.6 16V Turbo	10/09→	115	156	BSC		[-]	**PF0176**	136,9×57×19	OK012/ OK038	BSC		[-]	**PF0179**	95×46,9×17,6	OK012
1.6 16V VTi	02/07→	88	120	BSC		[-]	**PF0176**	136,9×57×19	OK012/ OK038	BSC		[-]	**PF0179**	95×46,9×17,6	OK012
1.6 HDi	02/06→	66	90	BSC		[-]	**PF0176**	136,9×57×19	OK012/ OK038	BSC		[-]	**PF0179**	95×46,9×17,6	OK012

		KW	CV												
				SiS	i	W.i.	MAGNETI MARELLI	W×H×Th (mm)	Extra kit [Opt]	SiS	i	W.i.	MAGNETI MARELLI	W×H×Th (mm)	Extra kit [Opt]
PEUGEOT															
207 Berlina (WA_WC)															
1.6 HDi	02/06→	80	109	BSC		[-]	**PF0176**	136,9×57×19	OK012/ OK038	BSC		[-]	**PF0179**	95×46,9×17,6	OK012
1.6 HDi	11/09→	68	92	BSC		[-]	**PF0176**	136,9×57×19	OK012/ OK038	BSC		[-]	**PF0179**	95×46,9×17,6	OK012
1.6 HDi 110	08/09→	82	112	BSC		[-]	**PF0176**	136,9×57×19	OK012/ OK038	BSC		[-]	**PF0179**	95×46,9×17,6	OK012
207 SW (WK_)															
1.4	06/07→	54	74	BSC		[-]	**PF0170**	136,9×51,6×19	OK012/ OK038	BSC		[-]	**PF0179**	95×46,9×17,6	OK012
1.4 16V	06/07→	70	95	BSC		[-]	**PF0170**	136,9×51,6×19	OK012/ OK038	BSC		[-]	**PF0179**	95×46,9×17,6	OK012
1.6 16V	06/07→	88	120	BSC		[-]	**PF0176**	136,9×57×19	OK012/ OK038	BSC		[-]	**PF0179**	95×46,9×17,6	OK012
1.6 16V RC	02/07→	128	174	BSC		[-]	**PF0176**	136,9×57×19	OK012/ OK038	BSC		[-]	**PF0179**	95×46,9×17,6	OK012
1.6 HDi	06/07→	66	90	BSC		[-]	**PF0176**	136,9×57×19	OK012/ OK038	BSC		[-]	**PF0179**	95×46,9×17,6	OK012
1.6 HDi	06/07→	80	109	BSC		[-]	**PF0176**	136,9×57×19	OK012/ OK038	BSC		[-]	**PF0179**	95×46,9×17,6	OK012
1.6 HDi	08/09→	82	112	BSC		[-]	**PF0176**	136,9×57×19	OK012/ OK038	BSC		[-]	**PF0179**	95×46,9×17,6	OK012
1.6 HDi	11/09→	68	92	BSC		[-]	**PF0176**	136,9×57×19	OK012/ OK038	BSC		[-]	**PF0179**	95×46,9×17,6	OK012
207 CC (WD_)															
1.6 16V	02/07→	88	120	BSC		[-]	**PF0176**	136,9×57×19	OK012/ OK038	BSC		[-]	**PF0179**	95×46,9×17,6	OK012
1.6 16V Turbo	02/07→	110	150	BSC		[-]	**PF0176**	136,9×57×19	OK012/ OK038	BSC		[-]	**PF0179**	95×46,9×17,6	OK012
1.6 16V Turbo	10/09→	115	156	BSC		[-]	**PF0176**	136,9×57×19	OK012/ OK038	BSC		[-]	**PF0179**	95×46,9×17,6	OK012
1.6 HDi	02/07→	80	109	BSC		[-]	**PF0176**	136,9×57×19	OK012/ OK038	BSC		[-]	**PF0179**	95×46,9×17,6	OK012
1.6 HDi	08/09→	82	112	BSC		[-]	**PF0176**	136,9×57×19	OK012/ OK038	BSC		[-]	**PF0179**	95×46,9×17,6	OK012
207 Van															
1.4 HDi	04/07→	50	68	BSC		[-]	**PF0174**	136,9×51,6×19	OK012/ OK038	BSC		[-]	**PF0179**	95×46,9×17,6	OK012
1.6 HDi	04/07→	66	90	BSC		[-]	**PF0176**	136,9×57×19	OK012/ OK038	BSC		[-]	**PF0179**	95×46,9×17,6	OK012
208															
1.0	03/12→	50	68	BSC		[-]	**PF0174**	136,9×51,6×19	OK012/ OK038	LG		[-]	**PF0348**	87×53×16	OK039
1.2	03/12→	60	82	BSC		[-]	**PF0174**	136,9×51,6×19	OK012/ OK038	LG		[-]	**PF0348**	87×53×16	OK039

		KW	CV	SiS	i	W.i.	MAGNETI MARELLI	W×H×Th (mm)	Extra kit [Opt]	SiS	i	W.i.	MAGNETI MARELLI	W×H×Th (mm)	Extra kit [Opt]
PEUGEOT															
208															
1.4	03/12→	70	95	BSC		[-]	**PF0174**	136,9×51,6×19	OK012/ OK038	LG		[-]	**PF0348**	87×53×16	OK039
1.4 HDi	03/12→	50	68	BSC		[-]	**PF0174**	136,9×51,6×19	OK012/ OK038	LG		[-]	**PF0348**	87×53×16	OK039
1.6	03/12→	88	120	BSC		[-]	**PF0174**	136,9×51,6×19	OK012/ OK038	LG		[-]	**PF0348**	87×53×16	OK039
1.6	03/12→	115	156	BSC		[-]	**PF0174**	136,9×51,6×19	OK012/ OK038	LG		[-]	**PF0348**	87×53×16	OK039
1.6 HDi	03/12→	68	92	BSC		[-]	**PF0174**	136,9×51,6×19	OK012/ OK038	LG		[-]	**PF0348**	87×53×16	OK039
1.6 HDi	03/12→	84	114	BSC		[-]	**PF0174**	136,9×51,6×19	OK012/ OK038	LG		[-]	**PF0348**	87×53×16	OK039
301															
1.2 VTi 72	11/12→	53	72	BSC		[-]	**PF0174**	136,9×51,6×19	OK012						
1.6 HDI 92	11/12→	68	92	BSC		[-]	**PF0174**	136,9×51,6×19	OK012						
1.6 VTi 115	11/12→	85	115	BSC		[-]	**PF0174**	136,9×51,6×19	OK012						
305 II Berlina/Break															
1.3	82→			BD		[+]	**PF0168**	105×54,3×18							
1.9 GTX	87→									BD		[-]	**PF0197**	105×56×11	
306															
1.4i SR - XR - XT - ST	93→			BD		[+]	**PF0168**	105×54,3×18							
1.4 XN - XR	97→			BSC		[-]	**PF0200**	130,8×47,2×18	OK034						
1.4i	00→			BSC	+ABS	[-]	**PF0537**	130,9×52,2×17,8	OK034	BD		[-]	**PF0790**	105×56×11	
1.4i	00→			BSC	+8 molle/ springs/- ABS	[-]	**PF0201**	130,9×47,2×18	OK012						
1.6i XS - XR - XT - ST - 16V	93→			ATE		[+]	**PF0195**	141,4×47,5×17,2							
1.6i Best XS - XT - ST	95→			ATE		[+]	**PF0195**	141,4×47,5×17,2							
1.6 XR - XS - XT	97→			BSC		[-]	**PF0200**	130,8×47,2×18	OK034						
1.6i	00→			BSC	+ABS	[-]	**PF0537**	130,9×52,2×17,8	OK034	BD		[-]	**PF0790**	105×56×11	
1.8i Best	95→			ATE		[+]	**PF0195**	141,4×47,5×17,2							
1.8i 16V	97→	82		LG		[+]	**PF0786**	130×56,3×19	OK030	BD		[-]	**PF0790**	105×56×11	
1.8i 16V	97→	99		LG		[+]	**PF0786**	130×56,3×19	OK030	BD		[-]	**PF0790**	105×56×11	
1.8i	00→			BSC	+ABS	[-]	**PF0537**	130,9×52,2×17,8	OK034	BD		[-]	**PF0790**	105×56×11	
1.9 D - TD	93→			ATE		[+]	**PF0195**	141,4×47,5×17,2							
1.9 TD DT -XRDT	97→			BSC		[-]	**PF0200**	130,8×47,2×18	OK034						
2.0 Xsi	93→									BD		[-]	**PF0790**	105×56×11	
2.0i S16	93→									BD		[-]	**PF0790**	105×56×11	
2.0i S16 Best	95→									LG		[-]	**PF0144**	87×53×15	OK039

		KW	CV	SiS	i	W.i.	MAGNETI MARELLI	W×H×Th (mm)	Extra kit [Opt]	SiS	i	W.i.	MAGNETI MARELLI	W×H×Th (mm)	Extra kit [Opt]
PEUGEOT															
306															
2.0i S16/Best	94→									LG		[-]	**PF0144**	87×53×15	OK039
2.0i S16	03/96→		163	LG		[+]	**PF0202**	130×56×19	OK030	LG		[-]	**PF0144**	87×53×15	OK039
2.0i 16V GTI	94→									LG		[-]	**PF0144**	87×53×15	OK039
2.0 D HDI DT - XR DT Berlina/SW	97→			BSC		[-]	**PF0200**	130,8×47,2×18	OK034						
2.0i 16V	97→	99		LG		[+]	**PF0786**	130×56,3×19	OK030	BD		[-]	**PF0790**	105×56×11	
2.0i 16V	97→	99		LG		[+]	**PF0786**	130×56,3×19	OK030	BD		[-]	**PF0144**	87×53×15	OK039
2.0i	99→00			BSC		[-]	**PF0537**	130,9×52,2×17,8	OK034	BD		[-]	**PF0790**	105×56×11	
2.0i	00→			BSC	+ABS	[-]	**PF0537**	130,9×52,2×17,8	OK034	BD		[-]	**PF0790**	105×56×11	
306 Cabriolet															
1.6	96→10/00			ATE		[+]	**PF0195**	141,4×47,5×17,2							
1.6	97→			BSC		[-]	**PF0200**	130,8×47,2×18	OK034						
1.8	03/94→			ATE		[+]	**PF0195**	141,4×47,5×17,2							
2.0i 16V	94→									LG		[-]	**PF0144**	87×53×15	OK039
306 Van															
1.9 D	93→			ATE		[+]	**PF0195**	141,4×47,5×17,2							
307 I Berlina															
1.4i	01→05			BSC		[-]	**PF0170**	136,9×51,6×19	OK012/ OK038	LG		[-]	**PF0131**	87×53×17	OK039/ OK041
1.4i 16V	02/04→05			BSC	-ESP	[-]	**PF0174**	136,9×51,6×19	OK012/ OK038	LG		[-]	**PF0131**	87×53×17	OK039/ OK041
1.4i 16V	02/04→05			BSC	+ESP	[-]	**PF0176**	136,9×57×19	OK012/ OK038	LG		[-]	**PF0131**	87×53×17	OK039/ OK041
1.4 Hdi	01→05			BSC		[-]	**PF0170**	136,9×51,6×19	OK012/ OK038	LG		[-]	**PF0131**	87×53×17	OK039/ OK041
1.6i 16V	01→05			BSC		[-]	**PF0176**	136,9×57×19	OK012/ OK038	LG		[-]	**PF0131**	87×53×17	OK039/ OK041
1.6 Hdi	02/04→05			BSC		[-]	**PF0176**	136,9×57×19	OK012/ OK038	LG		[-]	**PF0131**	87×53×17	OK039/ OK041
2.0i 16V	01→05			BSC		[-]	**PF0176**	136,9×57×19	OK012/ OK038	LG		[-]	**PF0131**	87×53×17	OK039/ OK041
2.0 Hdi	01→05			BSC		[-]	**PF0176**	136,9×57×19	OK012/ OK038	LG		[-]	**PF0131**	87×53×17	OK039/ OK041
2.0 Hdi	10/03→05			BSC		[-]	**PF0176**	136,9×57×19	OK012/ OK038	LG		[-]	**PF0131**	87×53×17	OK039/ OK041
2.0 Hdi	02/04→05			ATE		[-]	**PF0178**	155,1×66×18,8							
307 I SW															
1.4i 16V	02/04→05			BSC	-ESP	[-]	**PF0174**	136,9×51,6×19	OK012/ OK038	LG		[-]	**PF0131**	87×53×17	OK039/ OK041
1.4i 16V	02/04→05			BSC	+ESP	[-]	**PF0176**	136,9×57×19	OK012/ OK038	LG		[-]	**PF0131**	87×53×17	OK039/ OK041
1.6i 16V	03/02→			BSC		[-]	**PF0176**	136,9×57×19	OK012/ OK038	LG		[-]	**PF0131**	87×53×17	OK039/ OK041

		KW	CV												
				SiS	i	W.i.	MAGNETI MARELLI	W×H×Th (mm)	Extra kit [Opt]	SiS	i	W.i.	MAGNETI MARELLI	W×H×Th (mm)	Extra kit [Opt]
PEUGEOT															
307 I SW															
1.6 Hdi	02/04 → 05			BSC		[-]	**PF0176**	136,9×57×19	OK012/ OK038	LG		[-]	**PF0131**	87×53×17	OK039/ OK041
2.0i 16V	03/02 → 05			BSC		[-]	**PF0176**	136,9×57×19	OK012/ OK038	LG		[-]	**PF0131**	87×53×17	OK039/ OK041
2.0 Hdi	03/02 → 05			BSC		[-]	**PF0176**	136,9×57×19	OK012/ OK038	LG		[-]	**PF0131**	87×53×17	OK039/ OK041
2.0 Hdi	02/04 → 05			BSC		[-]	**PF0176**	136,9×57×19	OK012/ OK038	LG		[-]	**PF0131**	87×53×17	OK039/ OK041
2.0 Hdi	02/04 → 05			ATE		[-]	**PF0178**	155,1×66×18,8							
307 II Berlina															
1.4i 16V	09/05 → 08			BSC		[-]	**PF0170**	136,9×51,6×19	OK012/ OK038	LG		[-]	**PF0131**	87×53×17	OK039/ OK041
1.4i 16V	09/05 → 08			BSC		[-]	**PF0170**	136,9×51,6×19	OK012	BSC		[-]	**PF0179**	95×46,9×17,6	OK012/ OK040
1.6i 16V	09/05 → 08			BSC		[-]	**PF0170**	136,9×51,6×19	OK012/ OK038	LG		[-]	**PF0131**	87×53×17	OK039/ OK041
1.6i 16V	09/05 → 08			BSC		[-]	**PF0170**	136,9×51,6×19	OK012	BSC		[-]	**PF0179**	95×46,9×17,6	OK012/ OK040
1.6 Hdi 16V	09/05 → 08			BSC		[-]	**PF0170**	136,9×51,6×19	OK012/ OK038	LG		[-]	**PF0131**	87×53×17	OK039/ OK041
1.6 Hdi 16V	09/05 → 08			BSC		[-]	**PF0170**	136,9×51,6×19	OK012	BSC		[-]	**PF0179**	95×46,9×17,6	OK012/ OK040
2.0i 16V	09/05 → 08			BSC		[-]	**PF0176**	136,9×57×19	OK012/ OK038	LG		[-]	**PF0131**	87×53×17	OK039/ OK041
2.0i 16V	09/05 → 08			BSC		[-]	**PF0176**	136,9×57×19	OK012	BSC		[-]	**PF0179**	95×46,9×17,6	OK012/ OK040
2.0i 16V	09/05 → 08		180	ATE		[-]	**PF0178**	155,1×66×18,8		LG		[-]	**PF0131**	87×53×17	OK039/ OK041
2.0i 16V	09/05 → 08		180	ATE		[-]	**PF0178**	155,1×66×18,8		BSC		[-]	**PF0179**	95×46,9×17,6	OK012/ OK040
2.0 Hdi 16V	09/05 → 08			ATE		[-]	**PF0178**	155,1×66×18,8		LG		[-]	**PF0131**	87×53×17	OK039/ OK041
2.0 Hdi 16V	09/05 → 08			ATE		[-]	**PF0178**	155,1×66×18,8		BSC		[-]	**PF0179**	95×46,9×17,6	OK012/ OK040
307 II SW															
1.4i 16V	09/05 → 08			BSC		[-]	**PF0170**	136,9×51,6×19	OK012/ OK038	LG		[-]	**PF0131**	87×53×17	OK039/ OK041
1.4i 16V	09/05 → 08			BSC		[-]	**PF0170**	136,9×51,6×19	OK012	BSC		[-]	**PF0179**	95×46,9×17,6	OK012/ OK040
1.6i 16V	09/05 → 08			BSC		[-]	**PF0170**	136,9×51,6×19	OK012/ OK038	LG		[-]	**PF0131**	87×53×17	OK039/ OK041
1.6i 16V	09/05 → 08			BSC		[-]	**PF0170**	136,9×51,6×19	OK012	BSC		[-]	**PF0179**	95×46,9×17,6	OK012/ OK040

		KW	CV	SiS	i	W.i.	MAGNETI MARELLI	W×H×Th (mm)	Extra kit [Opt]	SiS	i	W.i.	MAGNETI MARELLI	W×H×Th (mm)	Extra kit [Opt]
PEUGEOT															
307 II SW															
1.6 Hdi 16V	09/05 → 08			BSC		[-]	**PF0170**	136,9×51,6×19	OK012/ OK038	LG		[-]	**PF0131**	87×53×17	OK039/ OK041
1.6 Hdi 16V	09/05 → 08			BSC		[-]	**PF0170**	136,9×51,6×19	OK012	BSC		[-]	**PF0179**	95×46,9×17,6	OK012/ OK040
2.0i 16V	09/05 → 08			BSC		[-]	**PF0176**	136,9×57×19	OK012/ OK038	LG		[-]	**PF0131**	87×53×17	OK039/ OK041
2.0i 16V	09/05 → 08			BSC		[-]	**PF0176**	136,9×57×19	OK012	BSC		[-]	**PF0179**	95×46,9×17,6	OK012/ OK040
2.0 Hdi 16V	09/05 → 08			ATE		[-]	**PF0178**	155,1×66×18,8		LG		[-]	**PF0131**	87×53×17	OK039/ OK041
2.0 Hdi 16V	09/05 → 08			ATE		[-]	**PF0178**	155,1×66×18,8		BSC		[-]	**PF0179**	95×46,9×17,6	OK012/ OK040
307 CC I															
1.6 16V	12/03 → 05			BSC		[-]	**PF0176**	136,9×57×19	OK012/ OK038	LG		[-]	**PF0131**	87×53×17	OK039/ OK041
1.6 16V	12/03 → 05			BSC		[-]	**PF0176**	136,9×57×19	OK012	BSC		[-]	**PF0179**	95×46,9×17,6	OK012/ OK040
2.0 16V	10/03 → 05			ATE		[-]	**PF0178**	155,1×66×18,8		LG		[-]	**PF0131**	87×53×17	OK039/ OK041
2.0 16V	10/03 → 05			ATE		[-]	**PF0178**	155,1×66×18,8		BSC		[-]	**PF0179**	95×46,9×17,6	OK012/ OK040
307 CC II															
1.6i 16V	09/05 → 08			BSC		[-]	**PF0170**	136,9×51,6×19	OK012/ OK038	LG		[-]	**PF0131**	87×53×17	OK039/ OK041
1.6i 16V	09/05 → 08			BSC		[-]	**PF0170**	136,9×51,6×19	OK012	BSC		[-]	**PF0179**	95×46,9×17,6	OK012/ OK040
2.0i 16V	09/05 → 08		140	ATE		[-]	**PF0656**	155,2×66×18,8		LG		[-]	**PF0131**	87×53×17	OK039/ OK041
2.0i 16V	09/05 → 08		140	BSC		[-]	**PF0176**	136,9×57×19	OK012/ OK038	LG		[-]	**PF0131**	87×53×17	OK039/ OK041
2.0i 16V	09/05 → 08		180	ATE		[-]	**PF0656**	155,2×66×18,8		LG		[-]	**PF0131**	87×53×17	OK039/ OK041
2.0i 16V	09/05 → 08		180	BSC		[-]	**PF0176**	136,9×57×19	OK012/ OK038	LG		[-]	**PF0131**	87×53×17	OK039/ OK041
2.0i 16V	09/05 → 08		180	BSC		[-]	**PF0176**	136,9×57×19	OK012	BSC		[-]	**PF0179**	95×46,9×17,6	OK012/ OK040
2.0 Hdi	09/05 → 08			ATE		[-]	**PF0656**	155,2×66×18,8		LG		[-]	**PF0131**	87×53×17	OK039/ OK041
2.0 Hdi	09/05 → 08			BSC		[-]	**PF0176**	136,9×57×19	OK012/ OK038	LG		[-]	**PF0131**	87×53×17	OK039/ OK041
2.0 Hdi	09/05 → 08			BSC		[-]	**PF0176**	136,9×57×19	OK012	BSC		[-]	**PF0179**	95×46,9×17,6	OK012/ OK040

		KW	CV	SiS	i	W.i.	MAGNETI MARELLI	W×H×Th (mm)	Extra kit [Opt]	SiS	i	W.i.	MAGNETI MARELLI	W×H×Th (mm)	Extra kit [Opt]
PEUGEOT															
308 Berlina (4A_4C)															
1.4 16V	09/07→	70	95	BSC		[-]	**PF0373**	151×61,6×18	OK012/ OK079	LG		[-]	**PF0131**	87×53×17	OK039/ OK041
1.4 16V	12/09→	72	98	BSC		[-]	**PF0373**	151×61,6×18	OK012/ OK079	LG		[-]	**PF0131**	87×53×17	OK039/ OK041
1.6 16V	09/07→	88	120	BSC		[-]	**PF0373**	151×61,6×18	OK012/ OK079	LG		[-]	**PF0131**	87×53×17	OK039/ OK041
1.6 16V	09/07→	110	150	BSC		[-]	**PF0373**	151×61,6×18	OK012/ OK079	LG		[-]	**PF0131**	87×53×17	OK039/ OK041
1.6 16V	03/08→	128	174	BSC		[-]	**PF0373**	151×61,6×18	OK012/ OK079	LG		[-]	**PF0131**	87×53×17	OK039/ OK041
1.6 16V	09/07→	103	140	BSC		[-]	**PF0373**	151×61,6×18	OK012/ OK079	LG		[-]	**PF0131**	87×53×17	OK039/ OK041
1.6 16V	10/09→	115	156	BSC		[-]	**PF0373**	151×61,6×18	OK012/ OK079	LG		[-]	**PF0131**	87×53×17	OK039/ OK041
1.6 HDi	09/07→	66	90	BSC		[-]	**PF0373**	151×61,6×18	OK012/ OK079	LG		[-]	**PF0131**	87×53×17	OK039/ OK041
1.6 HDi	09/07→	80	109	BSC		[-]	**PF0373**	151×61,6×18	OK012/ OK079	LG		[-]	**PF0131**	87×53×17	OK039/ OK041
1.6 HDi	11/09→	68	92	BSC		[-]	**PF0373**	151×61,6×18	OK012/ OK079	LG		[-]	**PF0131**	87×53×17	OK039/ OK041
1.6 HDi	12/09→	82	112	BSC		[-]	**PF0373**	151×61,6×18	OK012/ OK079	LG		[-]	**PF0131**	87×53×17	OK039/ OK041
1.6 GTi	07/10→	147	200							LG		[-]	**PF0131**	87×53×17	OK039/ OK041
2.0 HDi	09/07→	100	136	ATE		[-]	**PF0656**	155,2×66×18,8		LG		[-]	**PF0131**	87×53×17	OK039/ OK041
2.0 HDi	07/10→	103	140	ATE		[-]	**PF0656**	155,2×66×18,8		LG		[-]	**PF0131**	87×53×17	OK039/ OK041
308 SW															
1.4 16V	09/07→			BSC		[-]	**PF0373**	151×61,6×18	OK012/ OK079	LG		[-]	**PF0131**	87×53×17	OK039/ OK041
1.4 16V	05/08→			BSC		[-]	**PF0373**	151×61,6×18	OK012/ OK079	LG		[-]	**PF0171**	87,2×52,8×16,7	
1.6 16V	09/07→	88		BSC		[-]	**PF0373**	151×61,6×18	OK012/ OK079	LG		[-]	**PF0131**	87×53×17	OK039/ OK041
1.6 16V	05/08→	88		BSC		[-]	**PF0373**	151×61,6×18	OK012/ OK079	LG		[-]	**PF0171**	87,2×52,8×16,7	
1.6 16V	09/07→	110		BSC		[-]	**PF0373**	151×61,6×18	OK012/ OK079	LG		[-]	**PF0131**	87×53×17	OK039/ OK041
1.6 16V	05/08→	110		BSC		[-]	**PF0373**	151×61,6×18	OK012/ OK079	LG		[-]	**PF0171**	87,2×52,8×16,7	
1.6 16V	03/08→	124		ATE		[-]	**PF0656**	155,2×66×18,8		LG		[-]	**PF0131**	87×53×17	OK039/ OK041
1.6 16V	05/08→	124		ATE		[-]	**PF0656**	155,2×66×18,8		LG		[-]	**PF0171**	87,2×52,8×16,7	

		KW	CV	SiS	i	W.i.	MAGNETI MARELLI	W×H×Th (mm)	Extra kit [Opt]	SiS	i	W.i.	MAGNETI MARELLI	W×H×Th (mm)	Extra kit [Opt]
PEUGEOT															
308 SW															
1.6 Hdi	09/07 →			BSC		[-]	**PF0373**	151×61,6×18	OK012/ OK079	LG		[-]	**PF0131**	87×53×17	OK039/ OK041
1.6 Hdi	05/08 →			BSC		[-]	**PF0373**	151×61,6×18	OK012/ OK079	LG		[-]	**PF0171**	87,2×52,8×16,7	
2.0 Hdi	09/07 →			ATE		[-]	**PF0656**	155,2×66×18,8		LG		[-]	**PF0131**	87×53×17	OK039/ OK041
2.0 Hdi	05/08 →			ATE		[-]	**PF0656**	155,2×66×18,8		LG		[-]	**PF0171**	87,2×52,8×16,7	
308 CC															
1.6 16V	06/09 →	110	150	ATE		[-]	**PF0178**	155,1×66×18,8		LG		[-]	**PF0131**	87×53×17	OK039/ OK041
1.6 16V	06/09 →	88	120	ATE		[-]	**PF0178**	155,1×66×18,8		LG		[-]	**PF0131**	87×53×17	OK039/ OK041
1.6 16V	06/09 →	115	156	ATE		[-]	**PF0178**	155,1×66×18,8		LG		[-]	**PF0131**	87×53×17	OK039/ OK041
1.6 16V	06/09 →	103	140	ATE		[-]	**PF0178**	155,1×66×18,8		LG		[-]	**PF0131**	87×53×17	OK039/ OK041
1.6 HDi	06/09 →	82	112	ATE		[-]	**PF0178**	155,1×66×18,8		LG		[-]	**PF0131**	87×53×17	OK039/ OK041
1.6 THP	10/10 →	147	200							LG		[-]	**PF0131**	87×53×17	OK039/ OK041
2.0 HDi	04/09 →	103	140	ATE		[-]	**PF0178**	155,1×66×18,8		LG		[-]	**PF0131**	87×53×17	OK039/ OK041
2.0 HDi	04/09 →	100	136	ATE		[-]	**PF0178**	155,1×66×18,8		LG		[-]	**PF0131**	87×53×17	OK039/ OK041
2.0 HDi	06/09 →	120	163	ATE		[-]	**PF0178**	155,1×66×18,8		LG		[-]	**PF0131**	87×53×17	OK039/ OK041
308 II															
1.6	09/13 →	92	125	BSC		[-]	**PF0373**	151×61,6×18	OK012/ OK079						
1.6	09/13 →	115	156	BSC		[-]	**PF0373**	151×61,6×18	OK012/ OK079						
1.2 VTi 72	09/13 →	60	82	BSC		[-]	**PF0373**	151×61,6×18	OK012/ OK079						
1.6 HDi	09/13 →	68	92	BSC		[-]	**PF0373**	151×61,6×18	OK012/ OK079						
1.6 HDi	09/13 →	85	115	BSC		[-]	**PF0373**	151×61,6×18	OK012/ OK079						
309															
1.1	85 →			BD		[+]	**PF0372**	105×54,3×18							
1.3	85 →			BD		[+]	**PF0372**	105×54,3×18							
1.4	85 →			BD		[+]	**PF0372**	105×54,3×18							
1.6	86 →			BD		[+]	**PF0372**	105×54,3×18							
1.6i	86 →			BD	+AUT	[+]	**PF0372**	105×54,3×18							
1.6i GTI	86 →			BD		[+]	**PF0372**	105×54,3×18		BD		[-]	**PF0197**	105×56×11	

		KW	CV	SiS	i	W.i.	MAGNETI MARELLI	W×H×Th (mm)	Extra kit [Opt]	SiS	i	W.i.	MAGNETI MARELLI	W×H×Th (mm)	Extra kit [Opt]
PEUGEOT															
309															
1.6i GTI	86→									BD		[-]	**PF0197**	105×56×11	
1.8 D - TD	86→			BD		[+]	**PF0372**	105×54,3×18							
1.9 D	86→			BD		[+]	**PF0372**	105×54,3×18							
1.9i 16V GTI	89→									BD		[-]	**PF0197**	105×56×11	
1.9i GTI	86→									BD		[-]	**PF0197**	105×56×11	
1.9i GTE	86→									BD		[-]	**PF0197**	105×56×11	
405 Berlina/SW															
1.4	91→92			BD		[+]	**PF0372**	105×54,3×18							
1.4	91→92									LG		[-]	**PF0144**	87×53×15	OK039
1.4i /Break	92→			BD		[+]	**PF0372**	105×54,3×18							
1.4i /Break	92→									LG		[-]	**PF0144**	87×53×15	OK039
1.6	87→92			BD		[+]	**PF0372**	105×54,3×18							
1.6	87→92									LG		[-]	**PF0144**	87×53×15	OK039
1.6i /Break	92→			BD		[+]	**PF0372**	105×54,3×18							
1.6i /Break	92→									LG		[-]	**PF0144**	87×53×15	OK039
1.8 TD /Break	87→92			BD		[+]	**PF0372**	105×54,3×18							
1.8 TD /Break	87→92									LG		[-]	**PF0144**	87×53×15	OK039
1.8i /Break	92→			BD		[+]	**PF0372**	105×54,3×18							
1.8i /Break	92→									LG		[-]	**PF0144**	87×53×15	OK039
1.9 TD /Break	92→			BD		[+]	**PF0372**	105×54,3×18							
1.9 TD /Break	92→									LG		[-]	**PF0144**	87×53×15	OK039
1.9 D /Break	87→			BD		[+]	**PF0372**	105×54,3×18							
1.9 D /Break	87→									LG		[-]	**PF0144**	87×53×15	OK039
1.9i /Break	87→92			BD		[+]	**PF0372**	105×54,3×18							
1.9i /Break	87→92									LG		[-]	**PF0144**	87×53×15	OK039
1.9i 16V MI-16 /4WD	88→92									LG		[-]	**PF0144**	87×53×15	OK039
1.9i 4WD / Break	89→92			BD		[+]	**PF0372**	105×54,3×18							
1.9i 4WD / Break	89→92									LG		[-]	**PF0144**	87×53×15	OK039
2.0i /Break	92→			BD		[+]	**PF0372**	105×54,3×18							
2.0i /Break	92→									LG		[-]	**PF0144**	87×53×15	OK039
2.0i 16V MI-16	92→									LG		[-]	**PF0144**	87×53×15	OK039
2.0i 16V Turbo T-16	92→									LG		[-]	**PF0144**	87×53×15	OK039
2.0i 4WD / Break	92→			BD		[+]	**PF0372**	105×54,3×18							
2.0i 4WD / Break	92→									LG		[-]	**PF0144**	87×53×15	OK039

MAGNETI MARELLI

		KW	CV	SiS	i	W.i.	MAGNETI MARELLI	W×H×Th (mm)	Extra kit [Opt]	SiS	i	W.i.	MAGNETI MARELLI	W×H×Th (mm)	Extra kit [Opt]
PEUGEOT															
406															
1.6i	96 → 05/04			LG		[+]	**PF0374**	130×53×19	OK030	ATE		[+]	**PF0375**	63,8×57,6×17	
1.6i	96 → 05/04			LG	15"	[+]	**PF0202**	130×56×19	OK030	ATE		[+]	**PF0375**	63,8×57,6×17	
1.8i	96 → 05/04			LG		[+]	**PF0374**	130×53×19	OK030	ATE		[+]	**PF0375**	63,8×57,6×17	
1.8 16V	96 → 05/04			LG		[+]	**PF0374**	130×53×19	OK030	ATE		[+]	**PF0375**	63,8×57,6×17	
1.8 16V	96 → 05/04			LG	15"	[+]	**PF0202**	130×56×19	OK030	ATE		[+]	**PF0375**	63,8×57,6×17	
1.9 D	96 → 05/04			LG		[+]	**PF0374**	130×53×19	OK030	ATE		[+]	**PF0375**	63,8×57,6×17	
1.9 D	96 → 05/04			LG	15"	[+]	**PF0202**	130×56×19	OK030	ATE		[+]	**PF0375**	63,8×57,6×17	
1.9 TD	95 → 05/04			LG		[+]	**PF0374**	130×53×19	OK030	ATE		[+]	**PF0375**	63,8×57,6×17	
1.9 TD	95 → 05/04			LG	15"	[+]	**PF0202**	130×56×19	OK030	ATE		[+]	**PF0375**	63,8×57,6×17	
2.0i	95 → 05/04			LG		[+]	**PF0374**	130×53×19	OK030	ATE		[+]	**PF0375**	63,8×57,6×17	
2.0i	95 → 05/04			LG	15"	[+]	**PF0202**	130×56×19	OK030	ATE		[+]	**PF0375**	63,8×57,6×17	
2.0i 16V	95 → 05/04			LG	15"	[+]	**PF0202**	130×56×19	OK030	ATE		[+]	**PF0375**	63,8×57,6×17	
2.0i Turbo	95 → 05/04			LG	15"	[+]	**PF0202**	130×56×19	OK030	ATE		[+]	**PF0375**	63,8×57,6×17	
2.0 16V Hpi	05/01 → 05/04			LG	15"	[+]	**PF0202**	130×56×19	OK030	ATE		[+]	**PF0375**	63,8×57,6×17	
2.0i hdi	99 → 05/04			LG	15"	[+]	**PF0202**	130×56×19	OK030	ATE		[+]	**PF0375**	63,8×57,6×17	
2.0 Hdi 110	08/01 → 05/04			LG	+FAP	[+]	**PF0202**	130×56×19	OK030	ATE		[+]	**PF0375**	63,8×57,6×17	
2.1 TD 12V	01/96 →			LG		[+]	**PF0374**	130×53×19	OK030	ATE		[+]	**PF0375**	63,8×57,6×17	
2.1 TD 12V	01/96 →			LG	15"	[+]	**PF0202**	130×56×19	OK030	ATE		[+]	**PF0375**	63,8×57,6×17	
2.2	07/00 → 05/04			LG	15"	[+]	**PF0202**	130×56×19	OK030	ATE		[+]	**PF0375**	63,8×57,6×17	
2.2 Hdi	03/00 → 05/04			LG	+FAP	[+]	**PF0202**	130×56×19	OK030	ATE		[+]	**PF0375**	63,8×57,6×17	
2.9 V6	96 → 05/04			LG	15"	[+]	**PF0202**	130×56×19	OK030	ATE		[+]	**PF0375**	63,8×57,6×17	
3.0i V6 24V	10/96 → 05/04									ATE		[-]	**PF0482**	63,8×57,6×17	
3.0i V6	03/00 → 05/04									ATE		[-]	**PF0482**	63,8×57,6×17	
406 Coupé (8C)															
2.0i 16V	99 → 05/04			LG		[+]	**PF0202**	130×56×19	OK030	ATE		[+]	**PF0375**	63,8×57,6×17	
2.2	03/02 → 04			LG		[+]	**PF0202**	130×56×19	OK030	ATE		[+]	**PF0375**	63,8×57,6×17	
2.2 Hdi	03/00 → 04			LG	+FAP	[+]	**PF0202**	130×56×19	OK030	ATE		[+]	**PF0375**	63,8×57,6×17	
3.0i 24V V6	03/97 → 04									ATE		[+]	**PF0375**	63,8×57,6×17	
3.0i V6	03/00 → 04									ATE		[+]	**PF0375**	63,8×57,6×17	
407 Berlina (6D)															
1.6 HDi 110	05/04 →	80	109	LG	+ 4 w.i.	[+]	**PF0376**	131,4×66,8×19,4	OK030/ OK077	LG		[-]	**PF0616**	86,3×57×18	OK039
1.6 HDi 110	05/04 →	80	109						OK077	BSC		[-]	**PF0179**	95×46,9×17,6	OK012/ OK040
1.8	05/04 →	85	116	LG	+ 4 w.i.	[+]	**PF0376**	131,4×66,8×19,4	OK030/ OK077	LG		[-]	**PF0616**	86,3×57×18	OK039
1.8	05/04 →	85	116						OK077	LG		[-]	**PF0616**	86,3×57×18	OK039
1.8 16V	09/05 →	92	125	LG	+ 4 w.i.	[+]	**PF0376**	131,4×66,8×19,4	OK030/ OK077	BSC		[-]	**PF0179**	95×46,9×17,6	OK012/ OK040
1.8 16V	09/05 →	92	125						OK077	BSC		[-]	**PF0179**	95×46,9×17,6	OK012/ OK040
2.0	05/04 →	100	136	LG	+ 4 w.i.	[+]	**PF0376**	131,4×66,8×19,4	OK030/ OK077	LG		[-]	**PF0616**	86,3×57×18	OK039
2.0	05/04 →	100	136						OK077	LG		[-]	**PF0616**	86,3×57×18	OK039

		KW	CV	SiS	i	W.i.	MAGNETI MARELLI	W×H×Th (mm)	Extra kit [Opt]	SiS	i	W.i.	MAGNETI MARELLI	W×H×Th (mm)	Extra kit [Opt]
PEUGEOT															
407 Berlina (6D)															
2.0 16V	09/05→	103	140	LG	+ 4 w.i.	[+]	**PF0376**	131,4×66,8×19,4	OK030/ OK077	LG		[-]	**PF0616**	86,3×57×18	OK039
2.0 16V	09/05→	103	140						OK077	LG		[-]	**PF0616**	86,3×57×18	OK039
2.0 Bioflex	09/07→	103	140	LG	+ 4 w.i.	[+]	**PF0376**	131,4×66,8×19,4	OK030/ OK077	LG		[-]	**PF0616**	86,3×57×18	OK039
2.0 Bioflex	09/07→	103	140						OK077	LG		[-]	**PF0616**	86,3×57×18	OK039
2.0 HDi	08/08→	103	140	LG	+ 4 w.i.	[+]	**PF0376**	131,4×66,8×19,4	OK030/ OK077	LG		[-]	**PF0616**	86,3×57×18	OK039
2.0 HDi	08/08→	103	140						OK077	LG		[-]	**PF0616**	86,3×57×18	OK039
2.0 HDi	02/10→	110	150	ATE		[+]	**PF0669**	155,2×66,6×18		BSC		[-]	**PF0179**	95×46,9×17,6	OK012/ OK040
2.0 HDi	07/09→	120	163	LG		[+]	**PF0615**	162,5×79,2×18,3	OK030/ OK089	LG		[-]	**PF0616**	86,3×57×18	OK039
2.0 HDi 135	05/04→	100	136	ATE		[+]	**PF0669**	155,2×66,6×18		BSC		[-]	**PF0179**	95×46,9×17,6	OK012/ OK040
2.2	05/04→	116	158	LG		[+]	**PF0615**	162,5×79,2×18,3	OK030/ OK089	LG		[-]	**PF0616**	86,3×57×18	OK039
2.2 16V	09/05→	120	163	LG		[+]	**PF0615**	162,5×79,2×18,3	OK030/ OK089	BSC		[-]	**PF0179**	95×46,9×17,6	OK012/ OK040
2.2 16V	09/05→	120	163	LG		[+]	**PF0615**	162,5×79,2×18,3	OK030/ OK089	LG		[-]	**PF0616**	86,3×57×18	OK039
2.2 HDi	06/08→	120	163	LG		[+]	**PF0615**	162,5×79,2×18,3	OK030/ OK089	LG		[-]	**PF0616**	86,3×57×18	OK039
2.2 HDi 170	05/06→	125	170	LG		[+]	**PF0615**	162,5×79,2×18,3	OK030/ OK089	LG		[-]	**PF0616**	86,3×57×18	OK039
2.7 HDi	10/05→	150	204	LG		[+]	**PF0615**	162,5×79,2×18,3	OK030/ OK089	LG		[-]	**PF0616**	86,3×57×18	OK039
3.0	05/04→	155	211	LG		[+]	**PF0615**	162,5×79,2×18,3	OK030/ OK089	LG		[-]	**PF0616**	86,3×57×18	OK039
3.0	05/04→	155	211	LG		[+]	**PF0615**	162,5×79,2×18,3	OK030/ OK089	BSC		[-]	**PF0179**	95×46,9×17,6	OK012/ OK040
407 SW (6E_)															
1.6 HDi 110	05/04→	80	109	LG	+ 4 w.i.	[+]	**PF0376**	131,4×66,8×19,4	OK030/ OK077	LG		[-]	**PF0616**	86,3×57×18	OK039
1.6 HDi 110	05/04→	80	109						OK077	BSC		[-]	**PF0179**	95×46,9×17,6	OK012/ OK040
1.8	05/04→	85	116	LG	+ 4 w.i.	[+]	**PF0376**	131,4×66,8×19,4	OK030/ OK077	LG		[-]	**PF0616**	86,3×57×18	OK039
1.8	05/04→	85	116						OK077	LG		[-]	**PF0616**	86,3×57×18	OK039
1.8 16V	09/05→	92	125	LG	+ 4 w.i.	[+]	**PF0376**	131,4×66,8×19,4	OK030/ OK077	BSC		[-]	**PF0179**	95×46,9×17,6	OK012/ OK040
1.8 16V	09/05→	92	125						OK077	BSC		[-]	**PF0179**	95×46,9×17,6	OK012/ OK040

		KW	CV													
				SiS	i	W.i.	MAGNETI MARELLI	W×H×Th (mm)	Extra kit [Opt]	SiS	i	W.i.	MAGNETI MARELLI	W×H×Th (mm)	Extra kit [Opt]
PEUGEOT																
407 SW (6E_)																
2.0	05/04 →	100	136	LG	+ 4 w.i.	[+]	**PF0376**	131,4×66,8×19,4	OK030/ OK077	LG		[-]	**PF0616**	86,3×57×18	OK039
2.0	05/04 →	100	136						OK077	LG		[-]	**PF0616**	86,3×57×18	OK039
2.0 16V	09/05 →	103	140	LG	+ 4 w.i.	[+]	**PF0376**	131,4×66,8×19,4	OK030/ OK077	LG		[-]	**PF0616**	86,3×57×18	OK039
2.0 16V	09/05 →	103	140						OK077	LG		[-]	**PF0616**	86,3×57×18	OK039
2.0 Bioflex	01/08 →	103	140	LG	+ 4 w.i.	[+]	**PF0376**	131,4×66,8×19,4	OK030/ OK077	LG		[-]	**PF0616**	86,3×57×18	OK039
2.0 Bioflex	01/08 →	103	140						OK077	LG		[-]	**PF0616**	86,3×57×18	OK039
2.0 HDi	08/08 →	103	140	LG	+ 4 w.i.	[+]	**PF0376**	131,4×66,8×19,4	OK030/ OK077	LG		[-]	**PF0616**	86,3×57×18	OK039
2.0 HDi	08/08 →	103	140						OK077	LG		[-]	**PF0616**	86,3×57×18	OK039
2.0 HDi	05/04 → 07/08	93	126	LG	+ 4 w.i.	[+]	**PF0376**	131,4×66,8×19,4	OK030/ OK077	LG		[-]	**PF0616**	86,3×57×18	OK039
2.0 HDi	05/04 → 07/08	93	126						OK077	LG		[-]	**PF0616**	86,3×57×18	OK039
2.0 HDi	07/09 →	120	163	LG		[+]	**PF0615**	162,5×79,2×18,3	OK030/ OK089	LG		[-]	**PF0616**	86,3×57×18	OK039
2.0 HDi	02/10 →	110	150	LG		[+]	**PF0376**	131,4×66,8×19,4	OK030/ OK077	LG		[-]	**PF0616**	86,3×57×18	OK039
2.0 HDi 135	05/04 →	100	136	ATE		[+]	**PF0669**	155,2×66,6×18		BSC		[-]	**PF0179**	95×46,9×17,6	OK012/ OK040
2.2 16V	09/05 →	120	163	LG		[+]	**PF0615**	162,5×79,2×18,3	OK030/ OK089	LG		[-]	**PF0616**	86,3×57×18	OK039
2.2	05/04 →	116	158	LG		[+]	**PF0615**	162,5×79,2×18,3	OK030/ OK089	BSC		[-]	**PF0179**	95×46,9×17,6	OK012/ OK040
2.2 HDi	06/08 →	120	163	LG		[+]	**PF0615**	162,5×79,2×18,3	OK030/ OK089	LG		[-]	**PF0616**	86,3×57×18	OK039
2.2 HDi 170	05/06 →	125	170	LG		[+]	**PF0615**	162,5×79,2×18,3	OK030/ OK089	LG		[-]	**PF0616**	86,3×57×18	OK039
2.7 HDi	10/05 →	150	204	LG		[+]	**PF0615**	162,5×79,2×18,3	OK030/ OK089	LG		[-]	**PF0616**	86,3×57×18	OK039
3.0	05/04 →	155	211	LG		[+]	**PF0615**	162,5×79,2×18,3	OK030/ OK089	LG		[-]	**PF0616**	86,3×57×18	OK039
3.0	05/04 →	155	211	LG		[+]	**PF0615**	162,5×79,2×18,3	OK030/ OK089	BSC		[-]	**PF0179**	95×46,9×17,6	OK012/ OK040
407 Coupé (6C_)																
2.0 HDi	10/05 →	100	136	LG		[+]	**PF0376**	131,4×66,8×19,4	OK030/ OK077	LG		[-]	**PF0616**	86,3×57×18	OK039
2.0 HDi	06/09 →	120	163	LG		[+]	**PF0376**	131,4×66,8×19,4	OK030/ OK077	LG		[-]	**PF0616**	86,3×57×18	OK039
2.0 HDi	02/10 →	110	150	LG		[+]	**PF0376**	131,4×66,8×19,4	OK030/ OK077	LG		[-]	**PF0616**	86,3×57×18	OK039
2.2 16V	10/05 →	120	163	LG		[+]	**PF0615**	162,5×79,2×18,3	OK030/ OK089	LG		[-]	**PF0616**	86,3×57×18	OK039

		KW	CV	SiS	i	W.i.	MAGNETI MARELLI	W×H×Th (mm)	Extra kit [Opt]	SiS	i	W.i.	MAGNETI MARELLI	W×H×Th (mm)	Extra kit [Opt]
PEUGEOT															
407 Coupé (6C_)															
2.7 HDi	10/05→	150	204	LG		[+]	**PF0615**	162,5×79,2×18,3	OK030/ OK089	LG		[-]	**PF0616**	86,3×57×18	OK039
3.0 HDi	06/09→	177	241	LG		[+]	**PF0615**	162,5×79,2×18,3	OK030/ OK089	LG		[-]	**PF0616**	86,3×57×18	OK039
3.0 V6	10/05→	155	211							LG		[-]	**PF0616**	86,3×57×18	OK039
508 Berlina															
1.6 HDi	11/10→	82	112	ATE	16"	[+]	**PF0669**	155,2×66,6×18		ATE		[-]	**PF0431**	123,1×52×16,4	
1.6 HDi	11/10→	82	112	ATE	Ø Disc 283/26 15"	[+]	**PF0756**	155,1×55×17,3		ATE	+HB el.	[-]	**PF0570**	123,1×52×16,4	
1.6 VTi	11/10→	88	120	ATE	16"	[+]	**PF0669**	155,2×66,6×18		ATE		[-]	**PF0431**	123,1×52×16,4	
1.6 VTi	11/10→	88	120	ATE	Ø Disc 283/26 15"	[+]	**PF0756**	155,1×55×17,3		ATE	+HB el.	[-]	**PF0570**	123,1×52×16,4	
1.6 THP	11/10→	115	156	ATE	16"	[+]	**PF0669**	155,2×66,6×18		ATE		[-]	**PF0431**	123,1×52×16,4	
1.6 THP	11/10→	115	156	ATE	Ø Disc 283/26 15"	[+]	**PF0756**	155,1×55×17,3		ATE	+HB el.	[-]	**PF0570**	123,1×52×16,4	
2.0 HDi	11/10→	103	140	ATE	16"	[+]	**PF0669**	155,2×66,6×18		ATE		[-]	**PF0431**	123,1×52×16,4	
2.0 HDi	11/10→	103	140	ATE	Ø Disc 283/26 15"	[+]	**PF0756**	155,1×55×17,3		ATE	+HB el.	[-]	**PF0570**	123,1×52×16,4	
2.0 HDi	11/10→	120	163	ATE	16"	[+]	**PF0669**	155,2×66,6×18		ATE		[-]	**PF0431**	123,1×52×16,4	
2.0 HDi	11/10→	120	163	ATE	Ø Disc 283/26 15"	[+]	**PF0756**	155,1×55×17,3		ATE	+HB el.	[-]	**PF0570**	123,1×52×16,4	
2.2 HDi	11/10→	150	204	ATE	16"	[+]	**PF0669**	155,2×66,6×18		ATE		[-]	**PF0431**	123,1×52×16,4	
2.2 HDi	11/10→	150	204	ATE	Ø Disc 283/26 15"	[+]	**PF0756**	155,1×55×17,3		ATE	+HB el.	[-]	**PF0570**	123,1×52×16,4	
508 SW															
1.6 HDi	11/10→	82	112	ATE	16"	[+]	**PF0669**	155,2×66,6×18		ATE		[-]	**PF0431**	123,1×52×16,4	
1.6 HDi	11/10→	82	112	ATE	Ø Disc 283/26 15"	[+]	**PF0756**	155,1×55×17,3		ATE	+HB el.	[-]	**PF0570**	123,1×52×16,4	
1.6 VTi	11/10→	88	120	ATE	16"	[+]	**PF0669**	155,2×66,6×18		ATE		[-]	**PF0431**	123,1×52×16,4	
1.6 VTi	11/10→	88	120	ATE	Ø Disc 283/26 15"	[+]	**PF0756**	155,1×55×17,3		ATE	+HB el.	[-]	**PF0570**	123,1×52×16,4	
1.6 THP	11/10→	115	156	ATE	16"	[+]	**PF0669**	155,2×66,6×18		ATE		[-]	**PF0431**	123,1×52×16,4	
1.6 THP	11/10→	115	156	ATE	Ø Disc 283/26 15"	[+]	**PF0756**	155,1×55×17,3		ATE	+HB el.	[-]	**PF0570**	123,1×52×16,4	
2.0 HDi	11/10→	103	140	ATE	16"	[+]	**PF0669**	155,2×66,6×18		ATE		[-]	**PF0431**	123,1×52×16,4	
2.0 HDi	11/10→	103	140	ATE	Ø Disc 283/26 15"	[+]	**PF0756**	155,1×55×17,3		ATE	+HB el.	[-]	**PF0570**	123,1×52×16,4	
2.0 HDi	11/10→	120	163	ATE	16"	[+]	**PF0669**	155,2×66,6×18		ATE		[-]	**PF0431**	123,1×52×16,4	
2.0 HDi	11/10→	120	163	ATE	Ø Disc 283/26 15"	[+]	**PF0756**	155,1×55×17,3		ATE	+HB el.	[-]	**PF0570**	123,1×52×16,4	
2.2 HDi	11/10→	150	204	ATE	16"	[+]	**PF0669**	155,2×66,6×18		ATE		[-]	**PF0431**	123,1×52×16,4	
2.2 HDi	11/10→	150	204	ATE	Ø Disc 283/26 15"	[+]	**PF0756**	155,1×55×17,3		ATE	+HB el.	[-]	**PF0570**	123,1×52×16,4	

		KW	CV	SiS	i	W.i.	MAGNETI MARELLI	W×H×Th (mm)	Extra kit [Opt]	SiS	i	W.i.	MAGNETI MARELLI	W×H×Th (mm)	Extra kit [Opt]
PEUGEOT															
605															
2.0i	90 → 91									ATE		[+]	**PF0375**	63,8×57,6×17	
2.0i Turbo	90 → 91									ATE		[+]	**PF0375**	63,8×57,6×17	
2.0i TD	90 → 91									ATE		[+]	**PF0375**	63,8×57,6×17	
2.0i GL - SL - GR - SR - SV	91 → 00									ATE		[+]	**PF0375**	63,8×57,6×17	
2.0i Turbo SR - SV	93 → 00									ATE		[+]	**PF0375**	63,8×57,6×17	
2.1 TD SLV - SRV - SVD	91 → 00									ATE		[+]	**PF0375**	63,8×57,6×17	
2.5 TD SR - SV	93 → 00									ATE		[+]	**PF0375**	63,8×57,6×17	
3.0i V6	90 → 91									ATE		[+]	**PF0375**	63,8×57,6×17	
3.0i V6	90 → 00									ATE		[+]	**PF0375**	63,8×57,6×17	
3.0i V6 24V SV	91 → 00									ATE		[+]	**PF0375**	63,8×57,6×17	
3.0i V6 SR - SV	91 → 00									ATE		[+]	**PF0375**	63,8×57,6×17	
3.0i V6 24V	92 → 99									ATE		[+]	**PF0375**	63,8×57,6×17	
3.0i V6	04/97 → 99									ATE		[+]	**PF0375**	63,8×57,6×17	
607 (9D, 9U)															
2.0	02/00 →	100	136	LG		[+]	**PF0202**	130×56×19	OK030	ATE		[-]	**PF0482**	63,8×57,6×17	
2.0 HDI	05/00 →	80	109	LG		[+]	**PF0202**	130×56×19	OK030	ATE		[-]	**PF0482**	63,8×57,6×17	
2.0 HDI	09/05 →	100	136	LG		[+]	**PF0202**	130×56×19	OK030	ATE		[-]	**PF0482**	63,8×57,6×17	
2.0 HDi	03/01 → 07/04	79	107	LG		[+]	**PF0202**	130×56×19	OK030	ATE		[-]	**PF0482**	63,8×57,6×17	
2.2 16V	02/00 →	116	158	LG		[+]	**PF0202**	130×56×19	OK030	ATE		[-]	**PF0482**	63,8×57,6×17	
2.2 16V	09/05 →	120	163	LG		[+]	**PF0202**	130×56×19	OK030	ATE		[-]	**PF0482**	63,8×57,6×17	
2.2 HDI	02/00 →	98	133	LG		[+]	**PF0202**	130×56×19	OK030	ATE		[-]	**PF0482**	63,8×57,6×17	
2.2 HDi	05/06 →	125	170	LG		[+]	**PF0202**	130×56×19	OK030	ATE		[-]	**PF0482**	63,8×57,6×17	
2.7 HDi 24V	12/04 →	150	204	LG		[+]	**PF0202**	130×56×19	OK030	ATE		[-]	**PF0482**	63,8×57,6×17	
3.0 V6 24V	02/00 →	152	207	BR		[+]	**PF0498**	131,8×77,3×15,8		ATE		[-]	**PF0482**	63,8×57,6×17	
3.0 V6 24V	03/04 →	155	211	BR		[+]	**PF0498**	131,8×77,3×15,8		ATE		[-]	**PF0482**	63,8×57,6×17	
607 (Z9)															
All types	04 →			LG		[+]	**PF0615**	162,5×79,2×18,3	OK030/ OK089						
806															
All types	94 → 02			BD		[+]	**PF0192**	140×68,8×19	OK067	ATE		[-]	**PF0242**	123,1×43,1×17	
1.8i	97 → 02			BD		[+]	**PF0192**	140×68,8×19	OK067	ATE		[+]	**PF0788**	123,1×43,1×17	
1.9 TD	96 → 02			LG		[+]	**PF0787**	129,9×59×19	OK030	ATE		[+]	**PF0788**	123,1×43,1×17	
2.0i T.	96 → 02			LG		[+]	**PF0787**	129,9×59×19	OK030	ATE		[+]	**PF0788**	123,1×43,1×17	
2.0i 16V	96 → 02			LG		[+]	**PF0787**	129,9×59×19	OK030	ATE		[+]	**PF0788**	123,1×43,1×17	
2.0i	96 → 02			LG		[+]	**PF0787**	129,9×59×19	OK030	ATE		[+]	**PF0788**	123,1×43,1×17	
2.0 TD	96 → 02			LG		[+]	**PF0787**	129,9×59×19	OK030	ATE		[+]	**PF0788**	123,1×43,1×17	
2.1 TD	96 → 02			LG		[+]	**PF0787**	129,9×59×19	OK030	ATE		[+]	**PF0788**	123,1×43,1×17	

		KW	CV												
				SiS	i	W.i.	MAGNETI MARELLI	W×H×Th (mm)	Extra kit [Opt]	SiS	i	W.i.	MAGNETI MARELLI	W×H×Th (mm)	Extra kit [Opt]
PEUGEOT															
807 (E_)															
2.0	06/02→	100	136	LG		[+]	**PF0182**	146,7×60×19	OK037/ OK017	LG		[-]	**PF0131**	87×53×17	OK039/ OK041
2.0 16V	09/05→	103	140	LG		[+]	**PF0182**	146,7×60×19	OK037/ OK017	LG		[-]	**PF0131**	87×53×17	OK039/ OK041
2.0 HDi	06/09→	120	163	LG		[+]	**PF0182**	146,7×60×19	OK037/ OK017	LG		[-]	**PF0131**	87×53×17	OK039/ OK041
2.0 HDi	06/02→	79	107	LG		[+]	**PF0182**	146,7×60×19	OK037/ OK017	LG		[-]	**PF0131**	87×53×17	OK039/ OK041
2.0 HDI	06/06→	100	136	LG		[+]	**PF0182**	146,7×60×19	OK037/ OK017	LG		[-]	**PF0131**	87×53×17	OK039/ OK041
2.0 HDi	11/06→	88	120	LG		[+]	**PF0182**	146,7×60×19	OK037/ OK017	LG		[-]	**PF0131**	87×53×17	OK039/ OK041
2.0 HDi	04/04→ 05/06	80	109	LG		[+]	**PF0182**	146,7×60×19	OK037/ OK017	LG		[-]	**PF0131**	87×53×17	OK039/ OK041
2.2	06/02→	116	158	LG		[+]	**PF0182**	146,7×60×19	OK037/ OK017	LG		[-]	**PF0131**	87×53×17	OK039/ OK041
2.2 Hdi	06/02→	94	128	LG		[+]	**PF0182**	146,7×60×19	OK037/ OK017	LG		[-]	**PF0131**	87×53×17	OK039/ OK041
2.2 HDi	06/06→	125	170							LG		[-]	**PF0131**	87×53×17	OK039/ OK041
3.0 V6	06/02→	150	204	BR		[+]	**PF0498**	131,8×77,3×15,8		LG		[-]	**PF0131**	87×53×17	OK039/ OK041
1007 (KM_)															
1.4	04/05→	54	75	BSC		[-]	**PF0170**	136,9×51,6×19	OK012/ OK038						
1.4 16V	10/05→	65	88	BSC		[-]	**PF0170**	136,9×51,6×19	OK012/ OK038						
1.4 HDi	04/05→	50	68	BSC		[-]	**PF0170**	136,9×51,6×19	OK012/ OK038	LG		[-]	**PF0131**	87×53×17	OK039/ OK041
1.6 16V	04/05→	80	109	BSC		[-]	**PF0170**	136,9×51,6×19	OK012/ OK038	LG		[-]	**PF0131**	87×53×17	OK039/ OK041
1.6 HDi	06/07→	80	109	BSC		[-]	**PF0176**	136,9×57×19	OK012/ OK038	LG		[-]	**PF0131**	87×53×17	OK039/ OK041
2008															
1.2 VTi	03/13→	60	82	BSC	Ø Disc 266	[-]	**PF0174**	136,9×51,6×19	OK012	LG		[-]	**PF0131**	87×53×17	OK039/ OK041
1.2 VTi	03/13→	60	82	BSC	Ø Disc 283	[-]	**PF0697**	136,7×59,3×18,5	OK033/ OK079	LG		[-]	**PF0131**	87×53×17	OK039/ OK041
1.4 HDi	06/13→	50	68	BSC	Ø Disc 266	[-]	**PF0174**	136,9×51,6×19	OK012	LG		[-]	**PF0131**	87×53×17	OK039/ OK041
1.4 HDi	06/13→	50	68	BSC	Ø Disc 283	[-]	**PF0697**	136,7×59,3×18,5	OK033/ OK079	LG		[-]	**PF0131**	87×53×17	OK039/ OK041
1.6 HDi	03/13→	68	92	BSC	Ø Disc 266	[-]	**PF0174**	136,9×51,6×19	OK012	LG		[-]	**PF0131**	87×53×17	OK039/ OK041

		KW	CV												
				SiS	i	W.i.	MAGNETI MARELLI	W×H×Th (mm)	Extra kit [Opt]	SiS	i	W.i.	MAGNETI MARELLI	W×H×Th (mm)	Extra kit [Opt]
PEUGEOT															
2008															
1.6 HDi	03/13→	68	92	BSC	Ø Disc 283	[-]	**PF0697**	136,7×59,3×18,5	OK033/ OK079	LG		[-]	**PF0131**	87×53×17	OK039/ OK041
1.6 HDi	03/13→	84	114	BSC	Ø Disc 266	[-]	**PF0174**	136,9×51,6×19	OK012	LG		[-]	**PF0131**	87×53×17	OK039/ OK041
1.6 HDi	03/13→	84	114	BSC	Ø Disc 283	[-]	**PF0697**	136,7×59,3×18,5	OK033/ OK079	LG		[-]	**PF0131**	87×53×17	OK039/ OK041
1.6 VTi	03/13→	88	120	BSC	Ø Disc 266	[-]	**PF0174**	136,9×51,6×19	OK012	LG		[-]	**PF0131**	87×53×17	OK039/ OK041
1.6 VTi	03/13→	88	120	BSC	Ø Disc 283	[-]	**PF0697**	136,7×59,3×18,5	OK033/ OK079	LG		[-]	**PF0131**	87×53×17	OK039/ OK041
3008															
1.6	01/12→	120	163	BSC		[-]	**PF0373**	151×61,6×18	OK012/ OK079	LG	+HB el.	[-]	**PF0754**	103,8×55,9×17,3	
1.6 HDi	06/09→	80	109	BSC		[-]	**PF0373**	151×61,6×18	OK012/ OK079	LG	+HB el.	[-]	**PF0754**	103,8×55,9×17,3	
1.6 HDi	08/10→	82	112	BSC		[-]	**PF0373**	151×61,6×18	OK012/ OK079	LG	+HB el.	[-]	**PF0754**	103,8×55,9×17,3	
1.6 HDi	03/13→	84	114	BSC		[-]	**PF0373**	151×61,6×18	OK012/ OK079	LG	+HB el.	[-]	**PF0754**	103,8×55,9×17,3	
1.6 THP	06/09→	110	150	BSC		[-]	**PF0373**	151×61,6×18	OK012/ OK079	LG	+HB el.	[-]	**PF0754**	103,8×55,9×17,3	
1.6 THP	06/09→	115	156	BSC		[-]	**PF0373**	151×61,6×18	OK012/ OK079	LG	+HB el.	[-]	**PF0754**	103,8×55,9×17,3	
1.6 VTi	06/09→	88	120	BSC		[-]	**PF0373**	151×61,6×18	OK012/ OK079	LG	+HB el.	[-]	**PF0754**	103,8×55,9×17,3	
2.0 HDi	09/11→	100	136	ATE		[-]	**PF0178**	155,1×66×18,8		LG	+HB el.	[-]	**PF0754**	103,8×55,9×17,3	
2.0 HDi	06/09→	110	150	ATE		[-]	**PF0178**	155,1×66×18,8		LG	+HB el.	[-]	**PF0754**	103,8×55,9×17,3	
2.0 HDi	06/09→	120	165	ATE		[-]	**PF0178**	155,1×66×18,8		LG	+HB el.	[-]	**PF0754**	103,8×55,9×17,3	
2.0 Hybrid4	02/11→	120	165	ATE		[-]	**PF0178**	155,1×66×18,8		LG	+HB el.	[-]	**PF0754**	103,8×55,9×17,3	
4007 (GP_)															
2.0	11/10→	108	147	AK		[+]	**PF0496**	150×59×15,4		AK		[+]	**PF0285**	85,5×38,7×15,5	
2.0 4x4	11/10→	108	147	AK		[+]	**PF0496**	150×59×15,4		AK		[+]	**PF0285**	85,5×38,7×15,5	
2.2 HDi	02/07→	115	156	AK		[+]	**PF0496**	150×59×15,4		AK		[+]	**PF0285**	85,5×38,7×15,5	
2.4 16V	01/08→	125	170	AK		[+]	**PF0496**	150×59×15,4		AK		[+]	**PF0285**	85,5×38,7×15,5	
4008															
1.6 HDi	05/12→	84	114	BSC		[-]	**PF0176**	136,9×57×19	OK012	AK		[+]	**PF0340**	91×44,8 ×15,4	
1.6 HDi	05/12→	84	114	ST		[+]	**PF0338**	144,9×54,9×15,6		AK	nr. org 13115→	[+]	**PF0678**	101,5×44,4×14,3	
1.8 HDi	05/12→	110	150	BSC		[-]	**PF0176**	136,9×57×19	OK012	AK		[+]	**PF0340**	91×44,8 ×15,4	
1.8 HDi	05/12→	110	150	ST		[+]	**PF0338**	144,9×54,9×15,6		AK	nr. org 13115→	[+]	**PF0678**	101,5×44,4×14,3	
2.0	05/12→	110	150	BSC		[-]	**PF0176**	136,9×57×19	OK012	AK		[+]	**PF0340**	91×44,8 ×15,4	
2.0	05/12→	110	150	ST		[+]	**PF0338**	144,9×54,9×15,6		AK	nr. org 13115→	[+]	**PF0678**	101,5×44,4×14,3	

		KW	CV													
				SiS	i	W.i.	MAGNETI MARELLI	W×H×Th (mm)	Extra kit [Opt]	SiS	i	W.i.	MAGNETI MARELLI	W×H×Th (mm)	Extra kit [Opt]
PEUGEOT															
5008															
1.6 16V	09/09→	88	120	BSC		[-]	**PF0373**	151×61,6×18	OK012/ OK079	LG	+HB el.	[-]	**PF0754**	103,8×55,9×17,3	
1.6 16V	09/09→	115	156	BSC		[-]	**PF0373**	151×61,6×18	OK012/ OK079	LG	+HB el.	[-]	**PF0754**	103,8×55,9×17,3	
1.6 HDi	08/10→	82	112	BSC		[-]	**PF0373**	151×61,6×18	OK012/ OK079	LG	+HB el.	[-]	**PF0754**	103,8×55,9×17,3	
1.6 HDi	09/09→	80	110	BSC		[-]	**PF0373**	151×61,6×18	OK012/ OK079	LG	+HB el.	[-]	**PF0754**	103,8×55,9×17,3	
2.0 HDi	06/09→	110	150	ATE		[-]	**PF0178**	155,1×66×18,8		LG	+HB el.	[-]	**PF0754**	103,8×55,9×17,3	
2.0 HDi	09/09→	120	163	ATE		[-]	**PF0178**	155,1×66×18,8		LG	+HB el.	[-]	**PF0754**	103,8×55,9×17,3	
Bipper (AA_)															
1.3 HDi 75	10/10→	55	75	BSC	+2 w.i.	[+]	**PF0560**	122,9×53,4×18	OK012/ OK038						
1.3 HDi 75	10/10→	55	75	BSC		[+]	**PF0214**	137×57,3×19	OK033/ OK038						
1.4	02/08→	54	73	BSC	+2 w.i.	[+]	**PF0560**	122,9×53,4×18	OK012/ OK038						
1.4	02/08→	54	73	BSC		[+]	**PF0214**	137×57,3×19	OK033/ OK038						
1.4 HDi	02/08→	50	68	BSC	+2 w.i.	[+]	**PF0560**	122,9×53,4×18	OK012/ OK038						
1.4 HDi	02/08→	50	68	BSC		[+]	**PF0214**	137×57,3×19	OK033/ OK038						
Bipper Tepee															
1.3 HDi 75	10/10→	55	75	BSC	+2 w.i.	[+]	**PF0560**	122,9×53,4×18	OK012/ OK038						
1.4	04/08→	54	73	BSC	+2 w.i.	[+]	**PF0560**	122,9×53,4×18	OK012/ OK038						
1.4 HDi	04/08→	50	68	BSC	+2 w.i.	[+]	**PF0560**	122,9×53,4×18	OK012/ OK038						
Boxer I															
Boxer 27 10q	94→11/99			LG		[+]	**PF0789**	145,1×61×19,5	OK030						
Boxer 10q	12/99→01			LG		[+]	**PF0183**	145,1×61×19,5	OK030						
Boxer 31 14q	94→11/99			LG		[+]	**PF0789**	145,1×61×19,5	OK030						
Boxer 14q	12/99→01			LG		[+]	**PF0183**	145,1×61×19,5	OK030						
Boxer 310 2.5 D	94→11/99			LG		[+]	**PF0184**	160×64×19,5	OK030						
Boxer 310 2.5 TD	94→11/99			LG		[+]	**PF0184**	160×64×19,5	OK030						
Boxer 320 2.5 D	94→11/99			LG		[+]	**PF0184**	160×64×19,5	OK030						
Boxer 320 2.5 TD	94→11/99			LG		[+]	**PF0184**	160×64×19,5	OK030						
Boxer 35 18q	94→11/99			LG		[+]	**PF0184**	160×64×19,5	OK030						

		KW	CV	SiS	i	W.i.	MAGNETI MARELLI	W×H×Th (mm)	Extra kit [Opt]	SiS	i	W.i.	MAGNETI MARELLI	W×H×Th (mm)	Extra kit [Opt]
PEUGEOT															
Boxer I															
Boxer 18q	12/99 → 01			LG		[+]	**PF0185**	160×64×19,5	OK030						
Boxer II															
Boxer (10-14 q.)	02 → 06			BR		[+]	**PF0186**	140,5×65,9×19,3	OK060/ OK013	BR		[-]	**PF0188**	109,7×49,6×20	OK014
Boxer (18 q.)	02 → 06			BR		[+]	**PF0187**	164,8×69,3×19,3	OK060/ OK013	BR		[-]	**PF0188**	109,7×49,6×20	OK014
Boxer III															
Boxer 11q	06/06 →			BR		[+]	**PF0189**	169,3×61,5×19,2	OK060/ OK053	BR		[-]	**PF0191**	137×48,8×19	OK012/ OK038
Boxer 11q	06/11 →			BR	+2 w.i.	[+]	**PF0642**	169,3×61,5×19,2	OK060/ OK053	BR		[-]	**PF0191**	137×48,8×19	OK012/ OK038
Boxer 15q	06/06 →			BR		[+]	**PF0189**	169,3×61,5×19,2	OK060/ OK053	BR		[-]	**PF0191**	137×48,8×19	OK012/ OK038
Boxer 15q	06/11 →			BR	+2 w.i.	[+]	**PF0642**	169,3×61,5×19,2	OK060/ OK053	BR		[-]	**PF0191**	137×48,8×19	OK012/ OK038
Boxer 17q	06/06 →			BR	Light	[+]	**PF0189**	169,3×61,5×19,2	OK060/ OK052	BR		[-]	**PF0191**	137×48,8×19	OK012/ OK038
Boxer 17q	06/11 →			BR	Light/+2 w.i.	[+]	**PF0642**	169,3×61,5×19,2	OK060/ OK052	BR		[-]	**PF0191**	137×48,8×19	OK012/ OK038
Boxer 17q	06/06 →			BR	Heavy	[+]	**PF0190**	169,3×69,2×19	OK060/ OK051	BR		[-]	**PF0191**	137×48,8×19	OK012/ OK038
Boxer 17q	06/11 →			BR	Heavy/ +2 w.i.	[+]	**PF0643**	169,3×69,2×19	OK060/ OK051	BR		[-]	**PF0191**	137×48,8×19	OK012/ OK038
Boxer 20q	06/06 →			BR		[+]	**PF0190**	169,3×69,2×19	OK060/ OK066	BR		[-]	**PF0191**	137×48,8×19	OK012/ OK038
Boxer 20q	06/11 →			BR	+2 w.i.	[+]	**PF0643**	169,3×69,2×19	OK060/ OK066	BR		[-]	**PF0191**	137×48,8×19	OK012/ OK038
Expert I (224)															
1.6 EL	96 → 07			BD		[+]	**PF0192**	140×68,8×19	OK067						
1.6 EL	00 → 07			LG		[+]	**PF0182**	146,7×60×19	OK037/ OK017						
1.9 D EL	96 → 07			BD		[+]	**PF0192**	140×68,8×19	OK067						
1.9 D EL	00 → 07			LG		[+]	**PF0182**	146,7×60×19	OK037/ OK017						
1.9 TD EL	96 → 07			BD		[+]	**PF0192**	140×68,8×19	OK067						
1.9 TD EL	00 → 07			LG		[+]	**PF0182**	146,7×60×19	OK037/ OK017						
2.0	00 → 07			LG		[+]	**PF0182**	146,7×60×19	OK037/ OK017						
2.0	00 → 07			BD		[+]	**PF0192**	140×68,8×19	OK067						
2.0 Hdi	00 → 07			LG		[+]	**PF0182**	146,7×60×19	OK037/ OK017						
2.0 Hdi	00 → 07			BD		[+]	**PF0192**	140×68,8×19	OK067						

		KW	CV	SiS	i	W.i.	MAGNETI MARELLI	W×H×Th (mm)	Extra kit [Opt]	SiS	i	W.i.	MAGNETI MARELLI	W×H×Th (mm)	Extra kit [Opt]
PEUGEOT															
Expert II Box															
1.6 HDi 90	01/07 →	66	90	LG	(VF3A_, VF3U_, VF3X_)	[+]	**PF0193**	162×67,4×18,3	OK030/ OK059	LG		[-]	**PF0194**	113,5×58,3×16,7	OK030/ OK065
2.0 16V	01/07 →	103	140	LG	(VF3A_, VF3U_, VF3X_)	[+]	**PF0193**	162×67,4×18,3	OK030/ OK059	LG		[-]	**PF0194**	113,5×58,3×16,7	OK030/ OK065
2.0 HDi 100	03/11 →	72	98	LG	(VF3A_, VF3U_, VF3X_)	[+]	**PF0193**	162×67,4×18,3	OK030/ OK059	LG		[-]	**PF0194**	113,5×58,3×16,7	OK030/ OK065
2.0 HDi 120	01/07 →	88	120	LG	(VF3A_, VF3U_, VF3X_)	[+]	**PF0193**	162×67,4×18,3	OK030/ OK059	LG		[-]	**PF0194**	113,5×58,3×16,7	OK030/ OK065
2.0 HDi 130	03/11 →	94	128	LG	(VF3A_, VF3U_, VF3X_)	[+]	**PF0193**	162×67,4×18,3	OK030/ OK059	LG		[-]	**PF0194**	113,5×58,3×16,7	OK030/ OK065
2.0 HDi 140	01/07 →	100	136	LG	(VF3A_, VF3U_, VF3X_)	[+]	**PF0193**	162×67,4×18,3	OK030/ OK059	LG		[-]	**PF0194**	113,5×58,3×16,7	OK030/ OK065
2.0 HDi 165	09/09 →	120	163	LG	(VF3A_, VF3U_, VF3X_)	[+]	**PF0193**	162×67,4×18,3	OK030/ OK059	LG		[-]	**PF0194**	113,5×58,3×16,7	OK030/ OK065
Expert II Piatto															
1.6 HDi 90	01/07 →	66	90	LG		[+]	**PF0193**	162×67,4×18,3	OK030/ OK059	LG		[-]	**PF0194**	113,5×58,3×16,7	OK030/ OK065
2.0 HDi 120	01/07 →	88	120	LG		[+]	**PF0193**	162×67,4×18,3	OK030/ OK059	LG		[-]	**PF0194**	113,5×58,3×16,7	OK030/ OK065
2.0 HDi 140	01/07 →	100	136	LG		[+]	**PF0193**	162×67,4×18,3	OK030/ OK059	LG		[-]	**PF0194**	113,5×58,3×16,7	OK030/ OK065
Expert Tepee (VF3V_)															
1.6 HDi 90	01/07 →	66	90	LG		[+]	**PF0193**	162×67,4×18,3	OK030/ OK059	LG		[-]	**PF0194**	113,5×58,3×16,7	OK030/ OK065
2.0 16V	01/07 →	103	140	LG		[+]	**PF0193**	162×67,4×18,3	OK030/ OK059	LG		[-]	**PF0194**	113,5×58,3×16,7	OK030/ OK065
2.0 HDi 100	03/11 →	72	98	LG		[+]	**PF0193**	162×67,4×18,3	OK030/ OK059	LG		[-]	**PF0194**	113,5×58,3×16,7	OK030/ OK065
2.0 HDi 120	01/07 →	88	120	LG		[+]	**PF0193**	162×67,4×18,3	OK030/ OK059	LG		[-]	**PF0194**	113,5×58,3×16,7	OK030/ OK065
2.0 HDi 120 4x4	01/07 →	88	120	LG		[+]	**PF0193**	162×67,4×18,3	OK030/ OK059	LG		[-]	**PF0194**	113,5×58,3×16,7	OK030/ OK065
2.0 HDi 130	03/11 →	94	128	LG		[+]	**PF0193**	162×67,4×18,3	OK030/ OK059	LG		[-]	**PF0194**	113,5×58,3×16,7	OK030/ OK065
2.0 HDi 140	01/07 →	100	136	LG		[+]	**PF0193**	162×67,4×18,3	OK030/ OK059	LG		[-]	**PF0194**	113,5×58,3×16,7	OK030/ OK065

		KW	CV	SiS	i	W.i.	MAGNETI MARELLI	W×H×Th (mm)	Extra kit [Opt]	SiS	i	W.i.	MAGNETI MARELLI	W×H×Th (mm)	Extra kit [Opt]
PEUGEOT															
Expert Tepee (VF3V_)															
2.0 HDi 165	09/09 →	120	163	LG		[+]	**PF0193**	162×67,4×18,3	OK030/ OK059	LG		[-]	**PF0194**	113,5×58,3×16,7	OK030/ OK065
J5/J7/J9															
J 5 Van 1.8	80 →			LG		[+]	**PF0175**	130×71,2×19	OK032						
J 5 Van 1.9 D	80 →			LG		[+]	**PF0175**	130×71,2×19	OK032						
J 5 Van 2.0	80 →			LG		[+]	**PF0175**	130×71,2×19	OK032						
J 5 Van 2.5 D	80 →			LG		[+]	**PF0175**	130×71,2×19	OK032						
Partner I (5)															
1.1	06/96 →	44	60	LG		[+]	**PF0786**	130×56,3×19	OK030						
1.4	06/96 →	55	75	LG		[+]	**PF0786**	130×56,3×19	OK030						
1.4	11/02 → 10/06	54	73	LG		[+]	**PF0786**	130×56,3×19	OK030						
1.4 BiFuel	04/03 →	55	75	LG		[+]	**PF0786**	130×56,3×19	OK030						
1.6	09/00 → 10/02	80	109	LG		[+]	**PF0786**	130×56,3×19	OK030						
1.6 HDi 75	02/06 →	55	75	LG		[+]	**PF0786**	130×56,3×19	OK030						
1.6 HDi 90	02/06 →	66	90	LG		[+]	**PF0786**	130×56,3×19	OK030						
1.8	03/97 → 08/00	66	90	LG		[+]	**PF0786**	130×56,3×19	OK030						
1.8 D	06/96 →	43	58	LG		[+]	**PF0786**	130×56,3×19	OK030						
1.8 D	11/96 → 02/98	44	60	LG		[+]	**PF0786**	130×56,3×19	OK030						
1.9 D	06/96 →	51	69	LG		[+]	**PF0786**	130×56,3×19	OK030						
1.9 D	06/96 →	51	69	LG		[+]	**PF0786**	130×56,3×19	OK030						
1.9 D	05/96 → 12/98	50	68	LG		[+]	**PF0786**	130×56,3×19	OK030						
1.9 D 4x4	04/04 →	51	69	LG		[+]	**PF0786**	130×56,3×19	OK030						
2.0 HDi	04/00 →	66	90	LG		[+]	**PF0786**	130×56,3×19	OK030						
2.0 HDi 4x4	04/04 →	66	90	LG		[+]	**PF0786**	130×56,3×19	OK030						
Electric	04/96 → 12/02	25	34	LG		[+]	**PF0786**	130×56,3×19	OK030						
Partner I Combi (5F)															
1.1	06/96 →	44	60	LG		[+]	**PF0786**	130×56,3×19	OK030						
1.4	06/96 →	55	75	LG		[+]	**PF0786**	130×56,3×19	OK030						
1.4	11/02 → 10/06	54	73	LG		[+]	**PF0786**	130×56,3×19	OK030						
1.6 16V	07/01 →	80	109	LG		[+]	**PF0786**	130×56,3×19	OK030						
1.6 HDi 75	02/06 →	55	75	LG		[+]	**PF0786**	130×56,3×19	OK030						
1.6 HDi 90	02/06 →	66	90	LG		[+]	**PF0786**	130×56,3×19	OK030						
1.8	05/97 →	66	90	LG		[+]	**PF0786**	130×56,3×19	OK030						
1.9 D	06/96 →	50	68	LG		[+]	**PF0786**	130×56,3×19	OK030						
1.9 D	12/98 →	51	69	LG		[+]	**PF0786**	130×56,3×19	OK030						
1.9 D	05/96 → 12/98	51	69	LG		[+]	**PF0786**	130×56,3×19	OK030						
1.9 D 4x4	04/04 → 08/05	51	69	LG		[+]	**PF0786**	130×56,3×19	OK030						
2.0 HDI	02/00 →	66	90	LG		[+]	**PF0786**	130×56,3×19	OK030						
2.0 HDi 4x4	04/04 → 08/05	66	90	LG		[+]	**PF0786**	130×56,3×19	OK030						
Electric	01/98 → 12/01	28	38	LG		[+]	**PF0786**	130×56,3×19	OK030						

		KW	CV	SiS	i	W.i.	MAGNETI MARELLI	W×H×Th (mm)	Extra kit [Opt]	SiS	i	W.i.	MAGNETI MARELLI	W×H×Th (mm)	Extra kit [Opt]
PEUGEOT															
Partner II Box															
1.6	11/10→	72	98	ATE		[-]	**PF0169**	155,3×64,5×19,0		LG		[-]	**PF0171**	87,2×52,8×16,7	
1.6	04/10→	88	120	ATE		[-]	**PF0169**	155,3×64,5×19,0		LG		[-]	**PF0171**	87,2×52,8×16,7	
1.6	04/08→	66	90	ATE		[-]	**PF0169**	155,3×64,5×19,0		LG		[-]	**PF0171**	87,2×52,8×16,7	
1.6	04/08→	80	109	ATE		[-]	**PF0169**	155,3×64,5×19,0		LG		[-]	**PF0171**	87,2×52,8×16,7	
1.6 Flex	09/08→	81	110	ATE		[-]	**PF0169**	155,3×64,5×19,0		LG		[-]	**PF0171**	87,2×52,8×16,7	
1.6 HDi	08/10→	82	112	ATE		[-]	**PF0169**	155,3×64,5×19,0		LG		[-]	**PF0171**	87,2×52,8×16,7	
1.6 HDi	04/08→	55	75	ATE		[-]	**PF0169**	155,3×64,5×19,0		LG		[-]	**PF0171**	87,2×52,8×16,7	
1.6 HDi	04/08→	66	90	ATE		[-]	**PF0169**	155,3×64,5×19,0		LG		[-]	**PF0171**	87,2×52,8×16,7	
1.6 HDi	04/08→	80	109	ATE		[-]	**PF0169**	155,3×64,5×19,0		LG		[-]	**PF0171**	87,2×52,8×16,7	
1.6 HDi 90	04/10→	68	92	ATE		[-]	**PF0169**	155,3×64,5×19,0		LG		[-]	**PF0171**	87,2×52,8×16,7	
Partner Tepee															
1.6	04/08→	66	90	ATE		[-]	**PF0169**	155,3×64,5×19,0		LG		[-]	**PF0171**	87,2×52,8×16,7	
1.6	04/08→	80	109	ATE		[-]	**PF0169**	155,3×64,5×19,0		LG		[-]	**PF0171**	87,2×52,8×16,7	
1.6	04/10→	88	120	ATE		[-]	**PF0169**	155,3×64,5×19,0		LG		[-]	**PF0171**	87,2×52,8×16,7	
1.6	08/10→	72	98	ATE		[-]	**PF0169**	155,3×64,5×19,0		LG		[-]	**PF0171**	87,2×52,8×16,7	
1.6 Flex	09/08→	81	110	ATE		[-]	**PF0169**	155,3×64,5×19,0		LG		[-]	**PF0171**	87,2×52,8×16,7	
1.6 HDi	04/08→	55	75	ATE		[-]	**PF0169**	155,3×64,5×19,0		LG		[-]	**PF0171**	87,2×52,8×16,7	
1.6 HDi	04/08→	66	90	ATE		[-]	**PF0169**	155,3×64,5×19,0		LG		[-]	**PF0171**	87,2×52,8×16,7	
1.6 HDi	04/08→	80	109	ATE		[-]	**PF0169**	155,3×64,5×19,0		LG		[-]	**PF0171**	87,2×52,8×16,7	
1.6 HDi	08/10→	82	112	ATE		[-]	**PF0169**	155,3×64,5×19,0		LG		[-]	**PF0171**	87,2×52,8×16,7	
1.6 HDi 90	04/10→	68	92	ATE		[-]	**PF0169**	155,3×64,5×19,0		LG		[-]	**PF0171**	87,2×52,8×16,7	
Ranch I															
1.4i Combi	98→03			LG		[+]	**PF0786**	130×56,3×19	OK030						
1.4i Break PLS	98→03			LG		[+]	**PF0786**	130×56,3×19	OK030						
1.9 D Combi	96→03			LG		[+]	**PF0786**	130×56,3×19	OK030						
1.9 D Break PLS	96→03			LG		[+]	**PF0786**	130×56,3×19	OK030						
Ranch II															
1.4i	03→08			BSC		[-]	**PF0170**	136,9×51,6×19	OK012/ OK038						
1.6 16V	03→08			BSC		[-]	**PF0170**	136,9×51,6×19	OK012/ OK038						
1.9 D	03→08			BSC		[-]	**PF0170**	136,9×51,6×19	OK012/ OK038						
2.0 Hdi	03→08			BSC		[-]	**PF0170**	136,9×51,6×19	OK012/ OK038						
Ranch III															
1.6	04/08→			ATE		[-]	**PF0169**	155,3×64,5×19,0							
1.6 Hdi	04/08→			ATE		[-]	**PF0169**	155,3×64,5×19,0							
1.6 Flex	04/08→			ATE		[-]	**PF0169**	155,3×64,5×19,0							
RCZ															
1.6 16V	03/10→	115	156	ATE		[-]	**PF0178**	155,1×66×18,8		LG		[-]	**PF0754**	103,8×55,9×17,3	
1.6 16V	01/11→	121	165	ATE		[-]	**PF0178**	155,1×66×18,8		LG		[-]	**PF0754**	103,8×55,9×17,3	
1.6 16V	06/10→	147	200							LG		[-]	**PF0754**	103,8×55,9×17,3	

		KW	CV	SiS	i	W.i.	MAGNETI MARELLI	W×H×Th (mm)	Extra kit [Opt]	SiS	i	W.i.	MAGNETI MARELLI	W×H×Th (mm)	Extra kit [Opt]
PEUGEOT															
RCZ															
1.6 THP 270	06/13 →	199	271	ATE		[-]	**PF0178**	155,1×66×18,8		LG		[-]	**PF0754**	103,8×55,9×17,3	
2.0 HDi	03/10 →	120	163							LG		[-]	**PF0754**	103,8×55,9×17,3	
PIAGGIO															
Porter															
0.8	95 →			ST		[-]	**PF0815**	78,7×63,5×13,4							
1.0	02/93 → 06/94	33	45	ST		[-]	**PF0815**	78,7×63,5×13,4							
1.0	07/94 →	35	48	ST		[-]	**PF0815**	78,7×63,5×13,4							
1.2 D Box	05/95 →	26	35	ST		[-]	**PF0815**	78,7×63,5×13,4							
1.2 D Piatto	05/95 →	26	35	ST		[-]	**PF0815**	78,7×63,5×13,4							
1.3 16V Box	06/98 →	48	65	ST		[-]	**PF0815**	78,7×63,5×13,4							
1.3 16V 4x4 Box	06/98 →	48	65	ST		[-]	**PF0815**	78,7×63,5×13,4							
1.3 i 16V Box	05/98 →	48	65	ST		[-]	**PF0815**	78,7×63,5×13,4							
1.3 i 16V 4x4 Box	05/98 →	48	65	ST		[-]	**PF0815**	78,7×63,5×13,4							
1.3 16V Piatto	06/98 →	48	65	ST		[-]	**PF0815**	78,7×63,5×13,4							
1.3 16V 4x4 Piatto	06/98 →	48	65	ST		[-]	**PF0815**	78,7×63,5×13,4							
1.3 i 16V Piatto	05/98 →	48	65	ST		[-]	**PF0815**	78,7×63,5×13,4							
1.3 LPG 16V Piatto	06/98 →	48	64	ST		[-]	**PF0815**	78,7×63,5×13,4							
1.4 D Box	04/98 →	28	38	ST		[-]	**PF0815**	78,7×63,5×13,4							
1.4 D Piatto	04/98 →	28	38	ST		[-]	**PF0815**	78,7×63,5×13,4							
PROTON															
Aeroback (C2_A, C9_L)															
1.3	10/88 → 11/96	55	75	ST		[+]	**PF0333**	114,1×19,9×15							
1.3	10/88 → 06/91	50	68	ST		[+]	**PF0333**	114,1×19,9×15							
1.3	01/91 → 09/93	50	68	ST		[+]	**PF0333**	114,1×19,9×15							
1.5	01/91 → 11/96	66	90	ST		[+]	**PF0333**	114,1×19,9×15							
1.5	01/91 → 09/93	55	75	ST		[+]	**PF0333**	114,1×19,9×15							
1.5	10/88 → 06/91	55	75	ST		[+]	**PF0333**	114,1×19,9×15							
1.5 LX	10/88 → 11/96	66	90	ST		[+]	**PF0333**	114,1×19,9×15							
1.6 EX	10/88 → 11/96	70	95	ST		[+]	**PF0333**	114,1×19,9×15							
Gen 2 (CM_)															
1.3	06/04 →	70	95	ST		[+]	**PF0333**	114,1×19,9×15							
1.3	06/04 →	60	82	ST		[+]	**PF0333**	114,1×19,9×15							
1.6	06/04 →	82	110	ST		[+]	**PF0333**	114,1×19,9×15							
Jumbuck Pick-up															
1.5	05/02 →	64	86	ST		[+]	**PF0333**	114,1×19,9×15							

		KW	CV	SiS	i	W.i.	MAGNETI MARELLI	W×H×Th (mm)	Extra kit [Opt]	SiS	i	W.i.	MAGNETI MARELLI	W×H×Th (mm)	Extra kit [Opt]
PROTON															
Persona 300 (C9_M)															
1.3	08/00→	55	75	ST		[+]	**PF0333**	114,1×19,9×15							
1.8 GTi	08/00→	103	140	ST		[+]	**PF0333**	114,1×19,9×15							
313i	03/96→	55	75	ST		[+]	**PF0333**	114,1×19,9×15							
315 GLi/GLSi	03/96→	66	90	ST		[+]	**PF0333**	114,1×19,9×15							
315 GLSi	09/96→	64	87	ST		[+]	**PF0333**	114,1×19,9×15							
316	03/96→	70	95	ST		[+]	**PF0333**	114,1×19,9×15							
316 GLXi	03/96→	83	113	ST		[+]	**PF0333**	114,1×19,9×15							
318 16V GTI	03/96→	99	135	ST		[+]	**PF0333**	114,1×19,9×15							
Persona 400 (C9_S)															
1.3	10/05→	57	78	ST		[+]	**PF0333**	114,1×19,9×15							
1.5	10/05→	67	91	ST		[+]	**PF0333**	114,1×19,9×15							
1.8	08/00→12/01	99	135	ST		[+]	**PF0333**	114,1×19,9×15							
413	01/94→	55	75	ST		[+]	**PF0333**	114,1×19,9×15							
415 GLi/GLSi	01/94→	66	90	ST		[+]	**PF0333**	114,1×19,9×15							
416	08/00→02/02	70	95	ST		[+]	**PF0333**	114,1×19,9×15							
416 GLXi	01/94→	83	113	ST		[+]	**PF0333**	114,1×19,9×15							
418	05/96→	85	115	ST		[+]	**PF0333**	114,1×19,9×15							
420 GLS D	05/96→	48	65	ST		[+]	**PF0333**	114,1×19,9×15							
420 TD	09/96→	60	82	ST		[+]	**PF0333**	114,1×19,9×15							
Persona 400 (C9_C, C9_S)															
1.3	10/05→	57	78	ST	Hatchback	[+]	**PF0333**	114,1×19,9×15							
1.5	10/05→	67	91	ST	Hatchback	[+]	**PF0333**	114,1×19,9×15							
1.8	08/00→12/01	99	135	ST	Hatchback	[+]	**PF0333**	114,1×19,9×15							
413 GLSi	01/94→	55	75	ST	Hatchback	[+]	**PF0333**	114,1×19,9×15							
415 GLi/GLSi	01/94→	66	90	ST	Hatchback	[+]	**PF0333**	114,1×19,9×15							
416 GLXi	01/94→	83	113	ST	Hatchback	[+]	**PF0333**	114,1×19,9×15							
416 i	12/95→	70	95	ST	Hatchback	[+]	**PF0333**	114,1×19,9×15							
418 GLXi	05/96→	85	115	ST	Hatchback	[+]	**PF0333**	114,1×19,9×15							
420 D	09/96→	60	82	ST	Hatchback	[+]	**PF0333**	114,1×19,9×15							
420 GLS D	05/96→	48	65	ST	Hatchback	[+]	**PF0333**	114,1×19,9×15							
Proton															
1.3	91→97			ST		[+]	**PF0333**	114,1×19,9×15							
1.5 GL	91→97			ST		[+]	**PF0333**	114,1×19,9×15							
1.5 Lynx	91→			ST		[+]	**PF0333**	114,1×19,9×15							
1.5 Park Royal	91→			ST		[+]	**PF0333**	114,1×19,9×15							
Saga Hatchback															
1.3 GLS	10/88→06/91	50	68	ST		[+]	**PF0333**	114,1×19,9×15							
1.3 GLS 12V	01/91→06/96	50	68	ST		[+]	**PF0333**	114,1×19,9×15							
1.5 GLS	10/88→06/91	55	75	ST		[+]	**PF0333**	114,1×19,9×15							
1.5 GLS 12V	01/91→06/96	55	75	ST		[+]	**PF0333**	114,1×19,9×15							

		KW	CV	SiS	i	W.i.	MAGNETI MARELLI	W×H×Th (mm)	Extra kit [Opt]	SiS	i	W.i.	MAGNETI MARELLI	W×H×Th (mm)	Extra kit [Opt]
PROTON															
Saga 3 Volumi/Berlina															
1.3 GLE	10/88 → 06/91	50	68	ST		[+]	**PF0333**	114,1×19,9×15							
1.3 GLE 12V	01/91 → 06/96	50	68	ST		[+]	**PF0333**	114,1×19,9×15							
1.5 GLE	10/88 → 06/91	55	75	ST		[+]	**PF0333**	114,1×19,9×15							
1.5 GLE 12V	01/91 → 06/96	55	75	ST		[+]	**PF0333**	114,1×19,9×15							
Saloon (C2_)															
1.3	01/91 → 09/93	50	68	ST		[+]	**PF0333**	114,1×19,9×15							
1.3	10/92 → 06/96	55	75	ST		[+]	**PF0333**	114,1×19,9×15							
1.5	01/91 → 11/96	66	90	ST		[+]	**PF0333**	114,1×19,9×15							
1.5	01/91 → 09/93	55	75	ST		[+]	**PF0333**	114,1×19,9×15							
Satria (C9_M)															
1.3	08/00 →	55	75	ST		[+]	**PF0333**	114,1×19,9×15							
1.3	07/96 →	55	74	ST		[+]	**PF0333**	114,1×19,9×15							
1.5	07/00 →	64	86	ST		[+]	**PF0333**	114,1×19,9×15							
1.5	04/96 →	66	89	ST		[+]	**PF0333**	114,1×19,9×15							
1.6	07/97 →	70	94	ST		[+]	**PF0333**	114,1×19,9×15							
1.6	07/97 →	83	111	ST		[+]	**PF0333**	114,1×19,9×15							
1.8 GTi	08/00 →	103	140	ST		[+]	**PF0333**	114,1×19,9×15							
Wira															
1.3	08/00 →	55	74	ST		[+]	**PF0333**	114,1×19,9×15							
1.3	10/05 →	57	78	ST		[+]	**PF0333**	114,1×19,9×15							
1.5	08/00 →	64	86	ST		[+]	**PF0333**	114,1×19,9×15							
1.5	10/05 →	67	91	ST		[+]	**PF0333**	114,1×19,9×15							
1.6	08/00 → 02/02	70	95	ST		[+]	**PF0333**	114,1×19,9×15							
1.8	08/00 → 12/01	99	135	ST		[+]	**PF0333**	114,1×19,9×15							
Wira Hatchback															
1.3	08/00 →	55	74	ST		[+]	**PF0333**	114,1×19,9×15							
1.3	10/05 →	57	78	ST		[+]	**PF0333**	114,1×19,9×15							
1.5	08/00 →	64	86	ST		[+]	**PF0333**	114,1×19,9×15							
1.5	10/05 →	67	91	ST		[+]	**PF0333**	114,1×19,9×15							
1.8	08/00 → 12/01	99	135	ST		[+]	**PF0333**	114,1×19,9×15							
RENAULT															
Avantime (DE0_)															
2.0 16V T	11/01 → 05/03	120	163	LG	(DE0U, DE0V)	[-]	**PF0371**	145,1×62,5×18,2	OK012	LG		[-]	**PF0432**	87×53×16	OK039
2.0 16V T	11/01 → 05/03	120	163	LG	(DE0U, DE0V)	[+]	**PF0589**	145,1×62,5×18,2	OK037	LG		[-]	**PF0432**	87×53×16	OK039
2.2 dCi	05/02 → 05/03	110	150	LG	(DE01)	[-]	**PF0371**	145,1×62,5×18,2	OK012	LG		[-]	**PF0432**	87×53×16	OK039
2.2 dCi	05/02 → 05/03	110	150	LG	(DE01)	[+]	**PF0589**	145,1×62,5×18,2	OK037	LG		[-]	**PF0432**	87×53×16	OK039
3.0 V6	09/01 → 05/03	152	207	LG	(DE04, DE0T)	[-]	**PF0371**	145,1×62,5×18,2	OK012	LG		[-]	**PF0432**	87×53×16	OK039
3.0 V6	09/01 → 05/03	152	207	LG	(DE04, DE0T)	[+]	**PF0589**	145,1×62,5×18,2	OK037	LG		[-]	**PF0432**	87×53×16	OK039

		KW	CV	SiS	i	W.i.	MAGNETI MARELLI	W×H×Th (mm)	Extra kit [Opt]	SiS	i	W.i.	MAGNETI MARELLI	W×H×Th (mm)	Extra kit [Opt]
RENAULT															
Be Bop (Kangoo_KW0/1)															
1.5 dCi	06/09→	80	110	LG		[+]	**PF0662**	131,2×62,3×18,6	OK030/ OK044/ OK027	LG		[-]	**PF0660**	95,5×44,1×16	OK030/ OK081
1.5 dCi	02/09→	76	103	LG	(KW0F)	[+]	**PF0662**	131,2×62,3×18,6	OK030/ OK044/ OK027	LG		[-]	**PF0660**	95,5×44,1×16	OK030/ OK081
1.5 dCi	06/09→	66	90	LG	(KW0G)	[+]	**PF0662**	131,2×62,3×18,6	OK030/ OK044/ OK027	LG		[-]	**PF0660**	95,5×44,1×16	OK030/ OK081
1.5 dCi 75	09/10→	55	75	LG		[+]	**PF0662**	131,2×62,3×18,6	OK030/ OK044/ OK027	LG		[-]	**PF0660**	95,5×44,1×16	OK030/ OK081
1.6	02/09→	78	106	LG		[+]	**PF0662**	131,2×62,3×18,6	OK030/ OK044/ OK027	LG		[-]	**PF0660**	95,5×44,1×16	OK030/ OK081
Captur															
0.9 TCe 90	06/13→	66	90	LG		[-]	**PF0347**	116,5×52,4×17	OK030						
1.2 TCe 120	06/13→	88	120	ATE		[-]	**PF0429**	155,3×64,5×17,9							
1.5 dCi 90	06/13→	66	90	ATE		[-]	**PF0429**	155,3×64,5×17,9							
Clio I															
1.1 RN	90→92			BD		[+]	**PF0378**	105×55×15							
1.2	90→92			BD		[+]	**PF0372**	105×54,3×18							
1.2i	92→98			BD		[+]	**PF0372**	105×54,3×18							
1.2i	92→98			LG		[+]	**PF0203**	99,9×64,8×18	OK030						
1.4	90→92			BD		[+]	**PF0372**	105×54,3×18							
1.4i	92→98			BD		[+]	**PF0372**	105×54,3×18							
1.4i	92→98			LG		[+]	**PF0203**	99,9×64,8×18	OK030						
1.8 RT	90→92									BD	+ Rear Disc	[-]	**PF0790**	105×56×11	
1.8 RT	90→92									BD	+ Rear Disc	[-]	**PF0790**	105×56×11	
1.8i 16V	91→92									BD	+ Rear Disc	[-]	**PF0790**	105×56×11	
1.8i 16V	92→98			LG		[+]	**PF0203**	99,9×64,8×18	OK030	BD	+ Rear Disc	[-]	**PF0790**	105×56×11	
1.8i RT / Baccara	92→98			LG		[+]	**PF0203**	99,9×64,8×18	OK030	BD	+ Rear Disc	[-]	**PF0790**	105×56×11	
1.8i RT / Baccara	92→98			LG	+ABS	[+]	**PF0203**	99,9×64,8×18	OK030	BD	+ Rear Disc	[-]	**PF0790**	105×56×11	
1.9 D	91→98			BD		[+]	**PF0372**	105×54,3×18		BD	+ Rear Disc	[-]	**PF0790**	105×56×11	
1.9 D	91→98									BD	+ Rear Disc	[-]	**PF0790**	105×56×11	
2.0i 16V Williams	93→98			LG		[+]	**PF0203**	99,9×64,8×18	OK030	BD	+ Rear Disc	[-]	**PF0790**	105×56×11	
Clio Van															
1.9	91→			BD		[+]	**PF0372**	105×54,3×18							

		KW	CV													
				SiS	i	W.i.	MAGNETI MARELLI	W×H×Th (mm)	Extra kit [Opt]	SiS	i	W.i.	MAGNETI MARELLI	W×H×Th (mm)	Extra kit [Opt]
RENAULT															
Clio II (BB-CB)															
Storia	06 → 10	52	71	LG		[+]	**PF0203**	99,9×64,8×18	OK030						
1.0	06/01 → 04/05	52	71	LG		[+]	**PF0203**	99,9×64,8×18	OK030						
1.0	02/00 → 05/01	40	54	LG		[+]	**PF0203**	99,9×64,8×18	OK030						
1.0 Flex	11/05 →	57	76	LG		[+]	**PF0203**	99,9×64,8×18	OK030						
1.2	06/01 → 10/03	55	75	LG		[+]	**PF0203**	99,9×64,8×18	OK030						
1.2	03/99 → 05/01	44	60	LG	(B/CB0A)	[+]	**PF0203**	99,9×64,8×18	OK030						
1.2	09/98 →	43	58	LG	(B/CB0F, B/CB0A, B/CB10, B/CB1K, B/CB2D, B/CB2H)	[+]	**PF0203**	99,9×64,8×18	OK030						
1.2 16V	06/06 →	54	73	LG		[+]	**PF0203**	99,9×64,8×18	OK030						
1.2 16V	06/01 →	55	75	LG	(B/CB05)	[+]	**PF0203**	99,9×64,8×18	OK030						
1.4	09/98 → 05/05	55	75	LG	(B/CB0C)	[+]	**PF0203**	99,9×64,8×18	OK030						
1.4 16V	10/99 → 08/00	70	95	LG	(B/CB0L)	[+]	**PF0203**	99,9×64,8×18	OK030						
1.4 16V	08/00 →	72	98	LG	(B/CB0P)	[+]	**PF0203**	99,9×64,8×18	OK030						
1.5 D	08/04 →	50	68	LG		[+]	**PF0203**	99,9×64,8×18	OK030						
1.5 dCi	01/04 →	74	100	LG		[+]	**PF0203**	99,9×64,8×18	OK030						
1.5 dCi	06/01 → 10/03	59	80	LG	(B/CB03)	[+]	**PF0203**	99,9×64,8×18	OK030						
1.5 dCi	06/01 →	48	65	LG	(B/CB07)	[+]	**PF0203**	99,9×64,8×18	OK030						
1.5 dCi	06/01 →	60	82	LG	(B/CB08)	[+]	**PF0203**	99,9×64,8×18	OK030						
1.5 dCi	06/05 →	47	64	LG	(B/CB3M)	[+]	**PF0203**	99,9×64,8×18	OK030						
1.5 dCi	02/07 →	62	84	LG	(B/CB3N)	[+]	**PF0203**	99,9×64,8×18	OK030						
1.6	09/98 → 05/05	66	90	LG	(B/CB0D)	[+]	**PF0203**	99,9×64,8×18	OK030						
1.6 16V	10/01 → 12/08	82	112	LG		[+]	**PF0203**	99,9×64,8×18	OK030						
1.6 16V	09/98 →	79	107	LG	(CB0T, CB0H)	[+]	**PF0203**	99,9×64,8×18	OK030						
1.6 Flex	11/04 → 02/09	81	110	LG		[+]	**PF0203**	99,9×64,8×18	OK030						
1.6 Hi-Flex	01/05 → 02/10	86	117	LG		[+]	**PF0203**	99,9×64,8×18	OK030						
1.9 D	09/98 → 05/05	47	64	LG	(B/CB0E)	[+]	**PF0203**	99,9×64,8×18	OK030	BD	+ Rear Disc	[-]	**PF0790**	105×56×11	
1.9 D	02/00 → 05/01	48	65	LG	(B/CB0J)	[+]	**PF0203**	99,9×64,8×18	OK030	BD	+ Rear Disc	[-]	**PF0790**	105×56×11	
1.9 dTi	12/99 → 05/05	59	80	LG	(B/CB0U)	[+]	**PF0203**	99,9×64,8×18	OK030	BD	+ Rear Disc	[-]	**PF0790**	105×56×11	
2.0 16V Sport	01/04 →	132	179	LG		[-]	**PF0377**	129×55,6×18	OK032	BD	+ Rear Disc	[-]	**PF0790**	105×56×11	
2.0 16V Sport	02/00 →	124	169	LG	(CB0M)	[-]	**PF0377**	129×55,6×18	OK032	BD	+ Rear Disc	[-]	**PF0790**	105×56×11	
Clio II Van (SB)															
1.1	09/98 →	43	58	LG	(SB0A)	[+]	**PF0203**	99,9×64,8×18	OK030						
1.2	03/99 → 10/03	44	60	LG	(SB0F, SB10)	[+]	**PF0203**	99,9×64,8×18	OK030						
1.5 dCi	04/04 →	50	68	LG		[+]	**PF0203**	99,9×64,8×18	OK030						
1.5 dCi	11/03 →	60	82	LG		[+]	**PF0203**	99,9×64,8×18	OK030						
1.5 dCi	06/01 → 10/04	59	80	LG		[+]	**PF0203**	99,9×64,8×18	OK030						
1.5 dCi	06/01 →	48	65	LG	(SB07)	[+]	**PF0203**	99,9×64,8×18	OK030						
1.6	11/03 →	79	107	LG		[+]	**PF0203**	99,9×64,8×18	OK030						
1.9 D	03/99 → 01/00	40	54	LG		[+]	**PF0203**	99,9×64,8×18	OK030						

		KW	CV													
				SiS	i	W.i.	MAGNETI MARELLI	W×H×Th (mm)	Extra kit [Opt]	SiS	i	W.i.	MAGNETI MARELLI	W×H×Th (mm)	Extra kit [Opt]
RENAULT															
Clio II Van (SB)															
1.9 D	09/98 →	47	64	LG	(SB0E, SB0R)	[+]	**PF0203**	99,9×64,8×18	OK030						
1.9 D	02/00 → 05/01	48	65	LG	(SB0J)	[+]	**PF0203**	99,9×64,8×18	OK030						
1.9 Dti	02/00 → 05/01	59	80	LG	(SB0U)	[+]	**PF0203**	99,9×64,8×18	OK030						
Clio III (BR/CR)															
1.2	09/06 → 13	43	58	LG		[-]	**PF0347**	116,5×52,4×17	OK030/ OK058	LG		[-]	**PF0348**	87×53×16	OK039
1.2	10/05 → 13	57	78	LG		[-]	**PF0347**	116,5×52,4×17	OK030/ OK058	LG		[-]	**PF0348**	87×53×16	OK039
1.2 16V	09/10 → 13	76	103	LG		[-]	**PF0347**	116,5×52,4×17	OK030/ OK058	LG		[-]	**PF0348**	87×53×16	OK039
1.2 16V	06/05 → 13	55	75	LG		[-]	**PF0347**	116,5×52,4×17	OK030/ OK058	LG		[-]	**PF0348**	87×53×16	OK039
1.2 16V	06/05 → 13	58	78	LG		[-]	**PF0347**	116,5×52,4×17	OK030/ OK058	LG		[-]	**PF0348**	87×53×16	OK039
1.2 16V	05/07 → 13	74	101	LG		[-]	**PF0347**	116,5×52,4×17	OK030/ OK058	LG		[-]	**PF0348**	87×53×16	OK039
1.2 16V Hi-Flex	07/08 → 13	55	75	LG		[-]	**PF0347**	116,5×52,4×17	OK030/ OK058	LG		[-]	**PF0348**	87×53×16	OK039
1.2 16V	06/05 → 13	48	65	LG	(B/CR1J, B/CR1Q)	[-]	**PF0347**	116,5×52,4×17	OK030/ OK058	LG		[-]	**PF0348**	87×53×16	OK039
1.4 16V	06/05 → 13	72	98	LG		[-]	**PF0347**	116,5×52,4×17	OK030/ OK058	LG		[-]	**PF0348**	87×53×16	OK039
1.5 D	11/07 → 13	60	82	LG		[-]	**PF0347**	116,5×52,4×17	OK030/ OK058	LG		[-]	**PF0348**	87×53×16	OK039
1.5 dCi	06/05 → 13	47	64	LG		[-]	**PF0347**	116,5×52,4×17	OK030/ OK058	LG		[-]	**PF0348**	87×53×16	OK039
1.5 dCi	05/05 → 13	48	65	LG		[-]	**PF0347**	116,5×52,4×17	OK030/ OK058	LG		[-]	**PF0348**	87×53×16	OK039
1.5 dCi	08/10 → 13	55	75	LG		[-]	**PF0347**	116,5×52,4×17	OK030/ OK058	LG		[-]	**PF0348**	87×53×16	OK039
1.5 dCi	08/10 → 13	65	88	LG		[-]	**PF0347**	116,5×52,4×17	OK030/ OK058	LG		[-]	**PF0348**	87×53×16	OK039
1.5 dCi	06/05 → 13	78	106	LG	(BR0H, CR0H)	[-]	**PF0347**	116,5×52,4×17	OK030/ OK058	LG		[-]	**PF0348**	87×53×16	OK039
1.5 dCi	06/05 → 13	63	86	LG	(BR17, CR17)	[-]	**PF0347**	116,5×52,4×17	OK030/ OK058	LG		[-]	**PF0348**	87×53×16	OK039
1.5 dCi	06/05 → 13	76	103	LG	(BR1C, CR1C)	[-]	**PF0347**	116,5×52,4×17	OK030/ OK058	LG		[-]	**PF0348**	87×53×16	OK039
1.5 dCi	06/05 → 13	50	68	LG	(C/BR1G)	[-]	**PF0347**	116,5×52,4×17	OK030/ OK058	LG		[-]	**PF0348**	87×53×16	OK039
1.6 16V	06/05 → 13	65	88	LG		[-]	**PF0347**	116,5×52,4×17	OK030/ OK058	LG		[-]	**PF0348**	87×53×16	OK039

		KW	CV	SiS	i	W.i.	MAGNETI MARELLI	W×H×Th (mm)	Extra kit [Opt]	SiS	i	W.i.	MAGNETI MARELLI	W×H×Th (mm)	Extra kit [Opt]
RENAULT															
Clio III (BR/CR)															
1.6 16V	06/05 → 13	82	112	LG		[-]	**PF0347**	116,5×52,4×17	OK030/ OK058	LG		[-]	**PF0348**	87×53×16	OK039
1.6 16V GT	06/09 → 13	94	128	LG		[-]	**PF0347**	116,5×52,4×17	OK030/ OK058	LG		[-]	**PF0348**	87×53×16	OK039
1.6 Hi-Flex	05/05 → 02/10	86	117	LG		[-]	**PF0347**	116,5×52,4×17	OK030/ OK058	LG		[-]	**PF0348**	87×53×16	OK039
2.0 16V	09/06 → 13	102	139	LG		[-]	**PF0347**	116,5×52,4×17	OK030/ OK058	LG		[-]	**PF0348**	87×53×16	OK039
2.0 16V Sport	02/06 → 13	145	197	BR		[-]	**PF0590**	124,8×70,8×15,1		LG		[-]	**PF0348**	87×53×16	OK039
2.0 16V Sport	09/08 → 13	148	200	BR		[-]	**PF0590**	124,8×70,8×15,1		LG		[-]	**PF0348**	87×53×16	OK039
Clio III Grandtour (KR0/1_)															
1.2 16V	09/10 → 13	76	103	LG		[-]	**PF0347**	116,5×52,4×17	OK030/ OK058	LG		[-]	**PF0348**	87×53×16	OK039
1.2 16V	02/08 → 13	55	75	LG		[-]	**PF0347**	116,5×52,4×17	OK030/ OK058	LG		[-]	**PF0348**	87×53×16	OK039
1.2 16V	02/08 → 13	58	78	LG		[-]	**PF0347**	116,5×52,4×17	OK030/ OK058	LG		[-]	**PF0348**	87×53×16	OK039
1.2 16V Hi-Flex	07/08 → 13	55	75	LG		[-]	**PF0347**	116,5×52,4×17	OK030/ OK058	LG		[-]	**PF0348**	87×53×16	OK039
1.2 16V	02/08 → 13	74	101	LG	(KR0P)	[-]	**PF0347**	116,5×52,4×17	OK030/ OK058	LG		[-]	**PF0348**	87×53×16	OK039
1.4 16V	02/10 → 13	72	98	LG		[-]	**PF0347**	116,5×52,4×17	OK030/ OK058	LG		[-]	**PF0348**	87×53×16	OK039
1.5 dCi	08/10 → 13	55	75	LG		[-]	**PF0347**	116,5×52,4×17	OK030/ OK058	LG		[-]	**PF0348**	87×53×16	OK039
1.5 dCi	08/10 → 13	65	88	LG		[-]	**PF0347**	116,5×52,4×17	OK030/ OK058	LG		[-]	**PF0348**	87×53×16	OK039
1.5 dCi	02/10 → 13	48	65	LG		[-]	**PF0347**	116,5×52,4×17	OK030/ OK058	LG		[-]	**PF0348**	87×53×16	OK039
1.5 dCi	02/08 → 13	63	86	LG	(KR0F)	[-]	**PF0347**	116,5×52,4×17	OK030/ OK058	LG		[-]	**PF0348**	87×53×16	OK039
1.5 dCi	02/08 → 13	50	68	LG	(KR0G)	[-]	**PF0347**	116,5×52,4×17	OK030/ OK058	LG		[-]	**PF0348**	87×53×16	OK039
1.5 dCi	02/08 → 13	78	106	LG	(KR0H)	[-]	**PF0347**	116,5×52,4×17	OK030/ OK058	LG		[-]	**PF0348**	87×53×16	OK039
1.5 dCi	02/08 → 13	76	103	LG	(KR1C, KR1N)	[-]	**PF0347**	116,5×52,4×17	OK030/ OK058	LG		[-]	**PF0348**	87×53×16	OK039
1.6 16V	11/08 → 13	94	128	LG		[-]	**PF0347**	116,5×52,4×17	OK030/ OK058	LG		[-]	**PF0348**	87×53×16	OK039
1.6 16V	02/08 → 13	82	112	LG	(KR0B)	[-]	**PF0347**	116,5×52,4×17	OK030/ OK058	LG		[-]	**PF0348**	87×53×16	OK039
2.0 16V Sport	09/08 → 13	148	201	LG		[-]	**PF0347**	116,5×52,4×17	OK030/ OK058	LG		[-]	**PF0348**	87×53×16	OK039

		KW	CV	SiS	i	W.i.	MAGNETI MARELLI	W×H×Th (mm)	Extra kit [Opt]	SiS	i	W.i.	MAGNETI MARELLI	W×H×Th (mm)	Extra kit [Opt]
RENAULT															
Clio IV															
0.9 TCe 90	11/12→	66	90	LG	17"	[-]	**PF0347**	116,5×52,4×17	OK030						
0.9 TCe 90	11/12→	66	90	ATE	15"/16"	[-]	**PF0717**	140,2×40×18,1							
1.2 16V	11/12→	54	73	LG	17"	[-]	**PF0347**	116,5×52,4×17	OK030						
1.2 16V	11/12→	54	73	ATE	15"/16"	[-]	**PF0717**	140,2×40×18,1							
1.2 TCe 120	03/13→	88	120	LG	17"	[-]	**PF0347**	116,5×52,4×17	OK030						
1.2 TCe 120	03/13→	88	120	ATE	15"/16"	[-]	**PF0717**	140,2×40×18,1							
1.5 dCi 90	11/12→	66	90	LG	17"	[-]	**PF0347**	116,5×52,4×17	OK030						
1.5 dCi 90	11/12→	66	90	ATE	15"/16"	[-]	**PF0717**	140,2×40×18,1							
1.5 dCi 75	11/12→	55	75	LG	17"	[-]	**PF0347**	116,5×52,4×17	OK030						
1.5 dCi 75	11/12→	55	75	ATE	15"/16"	[-]	**PF0717**	140,2×40×18,1							
Clio IV Grandtour															
0.9 TCe 90	13→	66	90	LG	17"	[-]	**PF0347**	116,5×52,4×17	OK030	LG		[-]	**PF0432**	87×53×16	OK039
0.9 TCe 90	13→	66	90	ATE	15"/16"	[-]	**PF0717**	140,2×40×18,1		LG		[-]	**PF0432**	87×53×16	OK039
1.2 16V	13→	54	73	LG	17"	[-]	**PF0347**	116,5×52,4×17	OK030	LG		[-]	**PF0432**	87×53×16	OK039
1.2 16V	13→	54	73	ATE	15"/16"	[-]	**PF0717**	140,2×40×18,1		LG		[-]	**PF0432**	87×53×16	OK039
1.2 TCe 120	03/13→	88	120	ATE	15"/16"	[-]	**PF0717**	140,2×40×18,1		LG		[-]	**PF0432**	87×53×16	OK039
1.2 TCe 120	03/13→	88	120	LG	17"	[-]	**PF0347**	116,5×52,4×17	OK030	LG		[-]	**PF0432**	87×53×16	OK039
1.5 dCi	13→	55	75	LG	17"	[-]	**PF0347**	116,5×52,4×17	OK030	LG		[-]	**PF0432**	87×53×16	OK039
1.5 dCi	13→	55	75	ATE	15"/16"	[-]	**PF0717**	140,2×40×18,1		LG		[-]	**PF0432**	87×53×16	OK039
1.5 dCi	13→	66	90	LG	17"	[-]	**PF0347**	116,5×52,4×17	OK030	LG		[-]	**PF0432**	87×53×16	OK039
1.5 dCi	13→	66	90	ATE	15"/16"	[-]	**PF0717**	140,2×40×18,1		LG		[-]	**PF0432**	87×53×16	OK039
Espace I / II															
1.9 Dti	00→			LG		[+]	**PF0816**	130×63×17,7							
2.0	84→91			BD		[+]	**PF0372**	105×54,3×18							
2.0	84→91			BD	+ABS	[+]	**PF0372**	105×54,3×18							
2.0i	96→			LG	(JE)	[+]	**PF0816**	130×63×17,7							
2.0i 16V	96→			LG	(JE)	[+]	**PF0816**	130×63×17,7							
2.1 TD	84→91			BD		[+]	**PF0372**	105×54,3×18							
2.1 TD	84→91			BD	+ABS	[+]	**PF0372**	105×54,3×18							
2.2 D 12V	96→			LG	(JE)	[+]	**PF0816**	130×63×17,7							
2.2 12V	96→			LG		[+]	**PF0817**	130×55,6×18	OK032						
2.2 TD	96→			LG	(JE)	[+]	**PF0816**	130×63×17,7							
2.2i 16V Dci	00→			LG		[+]	**PF0816**	130×63×17,7							
3.0 V6	96→			LG		[+]	**PF0817**	130×55,6×18	OK032						
3.0 V6	96→			LG	(JE)	[+]	**PF0816**	130×63×17,7							
Espace III (JE)															
1.9 TDI	99→10/02			LG		[+]	**PF0816**	130×63×17,7							
2.0	01→10/02			LG		[+]	**PF0816**	130×63×17,7							
2.0 16V	98→10/02			LG		[+]	**PF0816**	130×63×17,7							
2.2 12V TD	98→00			LG		[+]	**PF0816**	130×63×17,7							
2.2 Dci	00→10/02			LG		[-]	**PF0371**	145,1×62,5×18,2	OK012						
2.2 Dci	00→10/02			LG		[+]	**PF0589**	145,1×62,5×18,2	OK037						
3.0 V6 24V	98→10/02			LG		[-]	**PF0371**	145,1×62,5×18,2	OK012						
3.0 V6 24V	98→10/02			LG		[+]	**PF0589**	145,1×62,5×18,2	OK037						

		KW	CV													
				SiS	i	W.i.	MAGNETI MARELLI	W×H×Th (mm)	Extra kit [Opt]	SiS	i	W.i.	MAGNETI MARELLI	W×H×Th (mm)	Extra kit [Opt]
RENAULT																
Espace IV (JK0/1_)																
1.9 dCi	11/02→	88	120	ATE	(JK0U, JK0G)	[-]	**PF0571**	155,2×68,5×18,2	OK087	ATE		[-]	**PF0349**	123,1×52×16,4	
2.0	11/02→02/05	98	133	ATE		[-]	**PF0571**	155,2×68,5×18,2	OK087	ATE		[-]	**PF0349**	123,1×52×16,4	
2.0	11/02→	100	136	ATE	(JK09, JK0K)	[-]	**PF0571**	155,2×68,5×18,2	OK087	ATE		[-]	**PF0349**	123,1×52×16,4	
2.0	04/05→	125	170	ATE	(JK1D)	[-]	**PF0571**	155,2×68,5×18,2	OK087	ATE		[-]	**PF0349**	123,1×52×16,4	
2.0 dCi	01/06→	110	150	ATE	(JK01, JK03)	[-]	**PF0571**	155,2×68,5×18,2	OK087	ATE		[-]	**PF0349**	123,1×52×16,4	
2.0 dCi	01/06→	96	131	ATE	(JK01, JK1H)	[-]	**PF0571**	155,2×68,5×18,2	OK087	ATE		[-]	**PF0349**	123,1×52×16,4	
2.0 dCi	01/06→	127	173	ATE	(JK03)	[-]	**PF0571**	155,2×68,5×18,2	OK087	ATE		[-]	**PF0349**	123,1×52×16,4	
2.0 Turbo	11/02→	120	163	ATE	(JK0B, JK0N)	[-]	**PF0571**	155,2×68,5×18,2	OK087	ATE		[-]	**PF0349**	123,1×52×16,4	
2.2 dCi	02/06→	102	139	ATE	(JK07)	[-]	**PF0571**	155,2×68,5×18,2	OK087	ATE		[-]	**PF0349**	123,1×52×16,4	
2.2 dCi	11/02→	110	150	ATE	(JK0H)	[-]	**PF0571**	155,2×68,5×18,2	OK087	ATE		[-]	**PF0349**	123,1×52×16,4	
3.0 dCi	11/02→	130	177	ATE	(JK0J, JK0V)	[-]	**PF0571**	155,2×68,5×18,2	OK087	ATE		[-]	**PF0349**	123,1×52×16,4	
3.0 dCi	01/06→	133	181	ATE	(JK0Y)	[-]	**PF0571**	155,2×68,5×18,2	OK087	ATE		[-]	**PF0349**	123,1×52×16,4	
3.5 V6	11/02→	177	241	ATE	(JK0F, JK0P)	[-]	**PF0571**	155,2×68,5×18,2	OK087	ATE		[-]	**PF0349**	123,1×52×16,4	
Express Van																
1.1	85→92			BD		[+]	**PF0378**	105×55×15								
1.2 - 1.4 - 1.6 D	85→92			BD		[+]	**PF0372**	105×54,3×18								
Express Van II																
1.2 - 1.4 - 1.6 D - 1.9 D	92→			BD		[+]	**PF0372**	105×54,3×18								
1.2 - 1.4 - 1.6 D - 1.9 D	92→			LG		[+]	**PF0203**	99,9×64,8×18	OK030							
Fluence (L30_)																
1.5 dCi	02/10→	63	86	ATE	(L30A)	[-]	**PF0429**	155,3×64,5×17,9		LG		[-]	**PF0131**	87×53×17	OK039/ OK041	
1.5 dCi	06/05→	78	106	ATE	(L30B)	[-]	**PF0429**	155,3×64,5×17,9		LG		[-]	**PF0131**	87×53×17	OK039/ OK041	
1.5 dCi	02/10→	81	110	ATE	(L30D, L30L)	[-]	**PF0429**	155,3×64,5×17,9		LG		[-]	**PF0131**	87×53×17	OK039/ OK041	
1.5 dCi	02/10→	66	90	ATE	(L30S)	[-]	**PF0429**	155,3×64,5×17,9		LG		[-]	**PF0131**	87×53×17	OK039/ OK041	
1.6 16V	02/10→	81	110	ATE		[-]	**PF0429**	155,3×64,5×17,9		LG		[-]	**PF0131**	87×53×17	OK039/ OK041	
2.0 16V	05/11→	101	137	ATE		[-]	**PF0429**	155,3×64,5×17,9		LG		[-]	**PF0131**	87×53×17	OK039/ OK041	
2.0 16V	02/10→	103	140	ATE		[-]	**PF0429**	155,3×64,5×17,9		LG		[-]	**PF0131**	87×53×17	OK039/ OK041	

		KW	CV	SiS	i	W.i.	MAGNETI MARELLI	W×H×Th (mm)	Extra kit [Opt]	SiS	i	W.i.	MAGNETI MARELLI	W×H×Th (mm)	Extra kit [Opt]
RENAULT															
Fluence (L30_)															
Z.E.	02/12→	70	95	ATE		[-]	**PF0429**	155,3×64,5×17,9		LG		[-]	**PF0131**	87×53×17	OK039/ OK041
Fuego															
1.4	82→86			BD		[+]	**PF0372**	105×54,3×18							
1.6	82→86			BD		[+]	**PF0372**	105×54,3×18							
2.0	82→86			BD		[+]	**PF0372**	105×54,3×18							
2.1 TD	82→86			BD		[+]	**PF0372**	105×54,3×18							
Grand Espace															
2.2i 16V Dci	00→			LG		[+]	**PF0816**	130×63×17,7							
Gran Scenic (JM0/1_)															
1.5 dCi	04/04→10/05	74	101	BSC	(JM02, JM13)	[-]	**PF0380**	136,8×59,2×18,1	OK012/ OK038	LG		[-]	**PF0144**	87×53×15	OK039
1.5 dCi	11/05-→	74	101	ATE	(JM02, JM13)	[-]	**PF0572**	155,2×68,5×18,2	OK087	LG		[-]	**PF0144**	87×53×15	OK039
1.5 dCi	05/05→10/05	78	106	BSC	(JM1E)	[-]	**PF0380**	136,8×59,2×18,1	OK012/ OK038	LG		[-]	**PF0144**	87×53×15	OK039
1.5 dCi	05/05→	78	106	ATE	(JM1E)	[-]	**PF0572**	155,2×68,5×18,2	OK087	LG		[-]	**PF0144**	87×53×15	OK039
1.6	04/04→10/05	83	113	BSC		[-]	**PF0380**	136,8×59,2×18,1	OK012/ OK038	LG		[-]	**PF0144**	87×53×15	OK039
1.6	04/04→	83	113	ATE		[-]	**PF0572**	155,2×68,5×18,2	OK087	LG		[-]	**PF0144**	87×53×15	OK039
1.6	06/06→10/05	77	105	BSC		[-]	**PF0380**	136,8×59,2×18,1	OK012/ OK038	LG		[-]	**PF0144**	87×53×15	OK039
1.6	06/06→	77	105	ATE		[-]	**PF0572**	155,2×68,5×18,2	OK087	LG		[-]	**PF0144**	87×53×15	OK039
1.9 dCi	04/04→10/05	88	120	BSC	(JM12, JM0G)	[-]	**PF0380**	136,8×59,2×18,1	OK012/ OK038	LG		[-]	**PF0144**	87×53×15	OK039
1.9 dCi	04/04→	88	120	ATE	(JM12, JM0G)	[-]	**PF0572**	155,2×68,5×18,2	OK087	LG		[-]	**PF0144**	87×53×15	OK039
1.9 dCi	05/05→10/05	96	131	BSC	(JM14)	[-]	**PF0380**	136,8×59,2×18,1	OK012/ OK038	LG		[-]	**PF0144**	87×53×15	OK039
1.9 dCi	05/05→	96	131	ATE	(JM14)	[-]	**PF0572**	155,2×68,5×18,2	OK087	LG		[-]	**PF0144**	87×53×15	OK039
1.9 dCi	05/05→10/05	81	110	BSC	(JM15)	[-]	**PF0380**	136,8×59,2×18,1	OK012/ OK038	LG		[-]	**PF0144**	87×53×15	OK039
1.9 dCi	05/05→	81	110	ATE	(JM15)	[-]	**PF0572**	155,2×68,5×18,2	OK087	LG		[-]	**PF0144**	87×53×15	OK039
2.0	04/04→10/05	99	135	BSC		[-]	**PF0380**	136,8×59,2×18,1	OK012/ OK038	LG		[-]	**PF0144**	87×53×15	OK039
2.0	04/04→	99	135	ATE		[-]	**PF0572**	155,2×68,5×18,2	OK087	LG		[-]	**PF0144**	87×53×15	OK039
2.0	04/04→10/05	120	163	BSC		[-]	**PF0380**	136,8×59,2×18,1	OK012/ OK038	LG		[-]	**PF0144**	87×53×15	OK039
2.0	04/04→	120	163	ATE		[-]	**PF0572**	155,2×68,5×18,2	OK087	LG		[-]	**PF0144**	87×53×15	OK039
2.0 dCi	09/05→10/05	110	150	BSC	(JM1K)	[-]	**PF0380**	136,8×59,2×18,1	OK012/ OK038	LG		[-]	**PF0144**	87×53×15	OK039
2.0 dCi	11/05-→	110	150	ATE	(JM1K)	[-]	**PF0572**	155,2×68,5×18,2	OK087	LG		[-]	**PF0144**	87×53×15	OK039

		KW	CV	SiS	i	W.i.	MAGNETI MARELLI	W×H×Th (mm)	Extra kit [Opt]	SiS	i	W.i.	MAGNETI MARELLI	W×H×Th (mm)	Extra kit [Opt]
RENAULT															
Gran Scenic III (JZ0/1_)															
1.4 16V	02/09 →	96	131	ATE		[-]	**PF0429**	155,3×64,5×17,9		LG		[-]	**PF0144**	87×53×15	OK039
1.5 dCi	04/09 →	81	110	ATE		[-]	**PF0429**	155,3×64,5×17,9		LG		[-]	**PF0144**	87×53×15	OK039
1.5 dCi	04/09 →	63	86	ATE		[-]	**PF0429**	155,3×64,5×17,9		LG		[-]	**PF0144**	87×53×15	OK039
1.5 dCi	11/10 →	70	95	ATE		[-]	**PF0429**	155,3×64,5×17,9		LG		[-]	**PF0144**	87×53×15	OK039
1.5 dCi	02/09 →	78	106	ATE		[-]	**PF0429**	155,3×64,5×17,9		LG		[-]	**PF0144**	87×53×15	OK039
1.6 16V	02/09 →	81	109	ATE		[-]	**PF0429**	155,3×64,5×17,9		LG		[-]	**PF0144**	87×53×15	OK039
1.6 16V Bifuel	02/09 →	81	110	ATE		[-]	**PF0429**	155,3×64,5×17,9		LG		[-]	**PF0144**	87×53×15	OK039
1.6 dCi	04/11 →	96	130	ATE		[-]	**PF0429**	155,3×64,5×17,9		LG		[-]	**PF0144**	87×53×15	OK039
1.9 dCi	02/09 →	96	131	ATE		[-]	**PF0429**	155,3×64,5×17,9		LG		[-]	**PF0144**	87×53×15	OK039
2.0 16V	02/09 →	103	140	ATE		[-]	**PF0429**	155,3×64,5×17,9		LG		[-]	**PF0144**	87×53×15	OK039
2.0 dCi	02/09 →	110	150	ATE		[-]	**PF0429**	155,3×64,5×17,9		LG		[-]	**PF0144**	87×53×15	OK039
2.0 dCi	04/09 →	118	160	ATE		[-]	**PF0429**	155,3×64,5×17,9		LG		[-]	**PF0144**	87×53×15	OK039
Koleos (HY_)															
2.0	08/13 →	103	140	ST		[+]	**PF0683**	157,1×58,3×18		AK		[+]	**PF0473**	105,5×38,2×13,7	
2.0 dCi	09/08 →	130	177	ST	(HY0B)	[+]	**PF0683**	157,1×58,3×18		AK		[+]	**PF0473**	105,5×38,2×13,7	
2.0 dCi	09/08 →	110	150	ST	(HY0K)	[+]	**PF0683**	157,1×58,3×18		AK		[+]	**PF0473**	105,5×38,2×13,7	
2.0 dCi 4x4	09/08 →	127	173	ST	(HY0B)	[+]	**PF0683**	157,1×58,3×18		AK		[+]	**PF0473**	105,5×38,2×13,7	
2.0 dCi 4x4	09/08 →	110	150	ST	(HY0K)	[+]	**PF0683**	157,1×58,3×18		AK		[+]	**PF0473**	105,5×38,2×13,7	
2.5	09/08 →	126	171	ST	(HY0C)	[+]	**PF0683**	157,1×58,3×18		AK		[+]	**PF0473**	105,5×38,2×13,7	
2.5 4x4	09/08 →	126	171	ST	(HY0C, HY0N)	[+]	**PF0683**	157,1×58,3×18		AK		[+]	**PF0473**	105,5×38,2×13,7	
Kangoo I (KC0/1_)															
1.2	08/97 →	43	58	BSC	(KC0A, KC0K, KC0F, KC01)	[-]	**PF0200**	130,8×47,2×18	OK034						
1.2	08/97 →	43	58	BSC	(KC0A, KC0K, KC0F, KC01)	[+]	**PF0513**	130,8×47,2×18	OK034						
1.4	08/97 →	55	75	BSC	(KC0C, KC0H, KC0B, KC0M)	[-]	**PF0200**	130,8×47,2×18	OK034						
1.4	08/97 →	55	75	BSC	(KC0C, KC0H, KC0B, KC0M)	[+]	**PF0513**	130,8×47,2×18	OK034						
1.5 dCi	12/01 →	48	65	BSC	(KC07)	[-]	**PF0200**	130,8×47,2×18	OK034						
1.5 dCi	12/01 →	48	65	BSC	(KC07)	[+]	**PF0513**	130,8×47,2×18	OK034						
1.6	09/99 → 06/01	66	90	BSC		[-]	**PF0200**	130,8×47,2×18	OK034						
1.6	09/99 → 06/01	66	90	BSC		[+]	**PF0513**	130,8×47,2×18	OK034						
1.6 16V	06/01 →	70	95	BSC		[-]	**PF0200**	130,8×47,2×18	OK034						
1.6 16V	06/01 →	70	95	BSC		[+]	**PF0513**	130,8×47,2×18	OK034						

		KW	CV													
				SiS	i	W.i.	MAGNETI MARELLI	W×H×Th (mm)	Extra kit [Opt]	SiS	i	W.i.	MAGNETI MARELLI	W×H×Th (mm)	Extra kit [Opt]
RENAULT															
Kangoo I (KC0/1_)															
1.9 dTi	02/00 →	59	80	BSC	(KC0U)	[-]	**PF0200**	130,8×47,2×18	OK034						
1.9 dTi	02/00 →	59	80	BSC	(KC0U)	[+]	**PF0513**	130,8×47,2×18	OK034						
1.9 RXED	09/99 → 06/01	48	65	BSC		[-]	**PF0200**	130,8×47,2×18	OK034						
1.9 RXED	09/99 → 06/01	48	65	BSC		[+]	**PF0513**	130,8×47,2×18	OK034						
D 55 1.9	08/97 →	40	54	BSC	(KC0D)	[-]	**PF0200**	130,8×47,2×18	OK034						
D 55 1.9	08/97 →	40	54	BSC	(KC0D)	[+]	**PF0513**	130,8×47,2×18	OK034						
D 65 1.9	08/97 →	47	64	BSC	(KC0E, KC02, KC0J, KC0N)	[-]	**PF0200**	130,8×47,2×18	OK034						
D 65 1.9	08/97 →	47	64	BSC	(KC0E, KC02, KC0J, KC0N)	[+]	**PF0513**	130,8×47,2×18	OK034						
Kangoo I Express (FC0/1_)															
1.2	07/98 → 07/01	44	60	BSC	(FC1A)	[-]	**PF0200**	130,8×47,2×18	OK034						
1.2	07/98 → 07/01	44	60	BSC	(FC1A)	[+]	**PF0513**	130,8×47,2×18	OK034						
1.2	08/97 →	43	58	BSC	(FC01, FC0A, FC0F)	[-]	**PF0200**	130,8×47,2×18	OK034						
1.2	08/97 →	43	58	BSC	(FC01, FC0A, FC0F)	[+]	**PF0513**	130,8×47,2×18	OK034						
1.4	08/97 →	55	75	BSC	(FC0C, FC0B, FC0H, FC0M)	[-]	**PF0200**	130,8×47,2×18	OK034						
1.4	08/97 →	55	75	BSC	(FC0C, FC0B, FC0H, FC0M)	[+]	**PF0513**	130,8×47,2×18	OK034						
1.6 16V	10/01 →	70	95	BSC		[-]	**PF0200**	130,8×47,2×18	OK034						
1.6 16V	10/01 →	70	95	BSC		[+]	**PF0513**	130,8×47,2×18	OK034						
1.9 D	09/99 → 06/03	48	65	BSC	(FC0J)	[-]	**PF0200**	130,8×47,2×18	OK034						
1.9 D	09/99 → 06/03	48	65	BSC	(FC0J)	[+]	**PF0513**	130,8×47,2×18	OK034						
1.9 dTi	02/00 →	59	80	BSC	(FC0U)	[-]	**PF0200**	130,8×47,2×18	OK034						
1.9 dTi	02/00 →	59	80	BSC	(FC0U)	[+]	**PF0513**	130,8×47,2×18	OK034						
D 55 1.9	08/97 →	40	54	BSC	(FC0D)	[-]	**PF0200**	130,8×47,2×18	OK034						
D 55 1.9	08/97 →	40	54	BSC	(FC0D)	[+]	**PF0513**	130,8×47,2×18	OK034						
D 65 1.9	08/97 →	47	64	BSC	(FC0E, FC02, FC0J, FC0N)	[-]	**PF0200**	130,8×47,2×18	OK034						

		KW	CV													
				SiS	i	W.i.	MAGNETI MARELLI	W×H×Th (mm)	Extra kit [Opt]	SiS	i	W.i.	MAGNETI MARELLI	W×H×Th (mm)	Extra kit [Opt]
RENAULT															
Kangoo I Express (FC0/1_)															
D 65 1.9	08/97 →	47	64	BSC	(FC0E, FC02, FC0J, FC0N)	[+]	**PF0513**	130,8×47,2×18	OK034						
Kangoo II (KC0/1_)															
1.2 16V	06/01 →	55	75	BSC		[+]	**PF0514**	130,8×47,5×18	OK034						
1.5 dCi	07/03 →	42	57	BSC		[+]	**PF0514**	130,8×47,5×18	OK034						
1.5 dCi	06/05 →	50	68	BSC		[+]	**PF0514**	130,8×47,5×18	OK034						
1.5 dCi	06/05 →	62	84	BSC		[+]	**PF0514**	130,8×47,5×18	OK034						
1.5 dCi	07/02 →	60	82	BSC	(KC08, KC09)	[+]	**PF0514**	130,8×47,5×18	OK034						
1.6 16V bivalent	06/05 →	60	82	BSC		[+]	**PF0514**	130,8×47,5×18	OK034						
Kangoo II Express (FC0/1_)															
1.0	07/03 →	40	54	BSC		[+]	**PF0514**	130,8×47,5×18	OK034						
1.2 16V	10/01 →	55	75	BSC	(FC05)	[+]	**PF0514**	130,8×47,5×18	OK034						
1.5 dCi	10/05 →	45	61	BSC		[+]	**PF0514**	130,8×47,5×18	OK034						
1.5 dCi	12/01 →	48	65	BSC	(FC07, FC1R)	[+]	**PF0514**	130,8×47,5×18	OK034						
1.5 dCi	04/03 →	60	82	BSC	(FC08, FC09)	[+]	**PF0514**	130,8×47,5×18	OK034						
1.5 dCi	06/05 →	50	68	BSC	(FC1E)	[+]	**PF0514**	130,8×47,5×18	OK034						
1.5 dCi	06/05 →	62	84	BSC	(FC1G)	[+]	**PF0514**	130,8×47,5×18	OK034						
1.5 dCi	12/02 →	42	57	BSC	(FC1R)	[+]	**PF0514**	130,8×47,5×18	OK034						
1.6 16V bivalent	06/05 →	60	82	BSC		[+]	**PF0514**	130,8×47,5×18	OK034						
1.9 dCi	07/03 →	62	84	BSC	(FC0V)	[+]	**PF0514**	130,8×47,5×18	OK034						
Kangoo 4x4 II (KC0/1_)															
1.6 16V 4x4	10/01 →	70	95	BSC	(KC0P, KC0S, KC0L)	[-]	**PF0380**	136,8×59,2×18,1	OK012/ OK038	BSC		[-]	**PF0613**	115,8×52×16,9	OK012
1.9 dCi 4x4	10/03 →	62	84	BSC		[-]	**PF0380**	136,8×59,2×18,1	OK012/ OK038	BSC		[-]	**PF0613**	115,8×52×16,9	OK012
1.9 dCi 4x4	10/01 →	59	80	BSC	(KC0V)	[-]	**PF0380**	136,8×59,2×18,1	OK012/ OK038	BSC		[-]	**PF0613**	115,8×52×16,9	OK012
Kangoo 4x4 Express II (FC0/1_)															
1.6 16V 4x4	10/01 →	70	95	BSC	(FC0L, FC0P, FC0S)	[-]	**PF0380**	136,8×59,2×18,1	OK012/ OK038	BSC		[-]	**PF0613**	115,8×52×16,9	OK012
1.9 dCi 4x4	10/01 →	59	80	BSC	(FC0V)	[-]	**PF0380**	136,8×59,2×18,1	OK012/ OK038	BSC		[-]	**PF0613**	115,8×52×16,9	OK012
1.9 dCi 4x4	07/03 →	62	84	BSC	(FC0V)	[-]	**PF0380**	136,8×59,2×18,1	OK012/ OK038	BSC		[-]	**PF0613**	115,8×52×16,9	OK012

		KW	CV	SiS	i	W.i.	MAGNETI MARELLI	W×H×Th (mm)	Extra kit [Opt]	SiS	i	W.i.	MAGNETI MARELLI	W×H×Th (mm)	Extra kit [Opt]
RENAULT															
Kangoo/G. Kangoo III (KW0/1)															
1.5 dCi	01/09→	48	65	LG		[-]	**PF0661**	131,2×62,3×18,6	OK030/ OK044/ OK027	LG		[-]	**PF0660**	95,5×44,1×16	OK030/ OK081
1.5 dCi	02/08→	50	68	LG	(KW0A)	[-]	**PF0661**	131,2×62,3×18,6	OK030/ OK044/ OK027	LG		[-]	**PF0660**	95,5×44,1×16	OK030/ OK081
1.5 dCi	02/08→	50	68	LG	(KW0A)	[+]	**PF0662**	131,2×62,3×18,6	OK030/ OK044/ OK027	LG		[-]	**PF0660**	95,5×44,1×16	OK030/ OK081
1.5 dCi	02/08→	63	86	LG	(KW0B)	[-]	**PF0661**	131,2×62,3×18,6	OK030/ OK044/ OK027	LG		[-]	**PF0660**	95,5×44,1×16	OK030/ OK081
1.5 dCi	02/08→	63	86	LG	(KW0B)	[+]	**PF0662**	131,2×62,3×18,6	OK030/ OK044/ OK027	LG		[-]	**PF0660**	95,5×44,1×16	OK030/ OK081
1.5 dCi	02/08→	76	103	LG	(KW0C, KW0F)	[-]	**PF0661**	131,2×62,3×18,6	OK030/ OK044/ OK027	LG		[-]	**PF0660**	95,5×44,1×16	OK030/ OK081
1.5 dCi	02/08→	76	103	LG	(KW0C, KW0F)	[+]	**PF0662**	131,2×62,3×18,6	OK030/ OK044/ OK027	LG		[-]	**PF0660**	95,5×44,1×16	OK030/ OK081
1.6	02/08→	64	87	LG	(KW00, KW0Y)	[-]	**PF0661**	131,2×62,3×18,6	OK030/ OK044/ OK027	LG		[-]	**PF0660**	95,5×44,1×16	OK030/ OK081
1.6	02/08→	64	87	LG	(KW00, KW0Y)	[+]	**PF0662**	131,2×62,3×18,6	OK030/ OK044/ OK027	LG		[-]	**PF0660**	95,5×44,1×16	OK030/ OK081
1.6 16V	02/08→	78	106	LG		[-]	**PF0661**	131,2×62,3×18,6	OK030/ OK044/ OK027	LG		[-]	**PF0660**	95,5×44,1×16	OK030/ OK081
1.6 16V	02/08→	78	106	LG		[+]	**PF0662**	131,2×62,3×18,6	OK030/ OK044/ OK027	LG		[-]	**PF0660**	95,5×44,1×16	OK030/ OK081
1.6 16V Hi-Flex	02/08→	78	106	LG		[-]	**PF0661**	131,2×62,3×18,6	OK030/ OK044/ OK027	LG		[-]	**PF0660**	95,5×44,1×16	OK030/ OK081
1.6 16V Hi-Flex	02/08→	78	106	LG		[+]	**PF0662**	131,2×62,3×18,6	OK030/ OK044/ OK027	LG		[-]	**PF0660**	95,5×44,1×16	OK030/ OK081

		KW	CV												
				SiS	i	W.i.	MAGNETI MARELLI	W×H×Th (mm)	Extra kit [Opt]	SiS	i	W.i.	MAGNETI MARELLI	W×H×Th (mm)	Extra kit [Opt]
RENAULT															
Kangoo Be Bop (KW0/1)															
1.5 dCi	06/09→	80	110	LG		[+]	**PF0662**	131,2×62,3×18,6	OK030/ OK044/ OK027	LG		[-]	**PF0660**	95,5×44,1×16	OK030/ OK081
1.5 dCi	02/09→	76	103	LG	(KW0F)	[+]	**PF0662**	131,2×62,3×18,6	OK030/ OK044/ OK027	LG		[-]	**PF0660**	95,5×44,1×16	OK030/ OK081
1.5 dCi	06/09→	66	90	LG	(KW0G)	[+]	**PF0662**	131,2×62,3×18,6	OK030/ OK044/ OK027	LG		[-]	**PF0660**	95,5×44,1×16	OK030/ OK081
1.5 dCi 75	09/10→	55	75	LG		[+]	**PF0662**	131,2×62,3×18,6	OK030/ OK044/ OK027	LG		[-]	**PF0660**	95,5×44,1×16	OK030/ OK081
1.6	02/09→	78	106	LG		[+]	**PF0662**	131,2×62,3×18,6	OK030/ OK044/ OK027	LG		[-]	**PF0660**	95,5×44,1×16	OK030/ OK081
Kangoo III Express (FW0/1_)															
1.5 dCi	02/08→	50	68	LG	(FW0A)	[-]	**PF0661**	131,2×62,3×18,6	OK030/ OK044/ OK027	LG		[-]	**PF0660**	95,5×44,1×16	OK030/ OK081
1.5 dCi	02/08→	50	68	LG	(FW0A)	[+]	**PF0662**	131,2×62,3×18,6	OK030/ OK044/ OK027	LG		[-]	**PF0660**	95,5×44,1×16	OK030/ OK081
1.5 dCi	02/08→	76	103	LG	(FW0F)	[-]	**PF0661**	131,2×62,3×18,6	OK030/ OK044/ OK027	LG		[-]	**PF0660**	95,5×44,1×16	OK030/ OK081
1.5 dCi	02/08→	76	103	LG	(FW0F)	[+]	**PF0662**	131,2×62,3×18,6	OK030/ OK044/ OK027	LG		[-]	**PF0660**	95,5×44,1×16	OK030/ OK081
1.5 dCi 110	09/10→	80	110	LG		[-]	**PF0661**	131,2×62,3×18,6	OK030/ OK044/ OK027	LG		[-]	**PF0660**	95,5×44,1×16	OK030/ OK081
1.5 dCi 110	09/10→	80	110	LG		[+]	**PF0662**	131,2×62,3×18,6	OK030/ OK044/ OK027	LG		[-]	**PF0660**	95,5×44,1×16	OK030/ OK081
1.5 dCi 75	09/10→	55	75	LG		[-]	**PF0661**	131,2×62,3×18,6	OK030/ OK044/ OK027	LG		[-]	**PF0660**	95,5×44,1×16	OK030/ OK081
1.5 dCi 75	09/10→	55	75	LG		[+]	**PF0662**	131,2×62,3×18,6	OK030/ OK044/ OK027	LG		[-]	**PF0660**	95,5×44,1×16	OK030/ OK081
1.5 dCi 85	02/08→	63	86	LG	(FW0A, FW0B)	[-]	**PF0661**	131,2×62,3×18,6	OK030/ OK044/ OK027	LG		[-]	**PF0660**	95,5×44,1×16	OK030/ OK081

		KW	CV	SiS	i	W.i.	MAGNETI MARELLI	W×H×Th (mm)	Extra kit [Opt]	SiS	i	W.i.	MAGNETI MARELLI	W×H×Th (mm)	Extra kit [Opt]
RENAULT															
Kangoo III Express (FW0/1_)															
1.5 dCi 85	02/08 →	63	86	LG	(FW0A, FW0B)	[+]	**PF0662**	131,2×62,3×18,6	OK030/ OK044/ OK027	LG		[-]	**PF0660**	95,5×44,1×16	OK030/ OK081
1.5 dCi 90	06/09 →	66	90	LG	(FW0G)	[-]	**PF0661**	131,2×62,3×18,6	OK030/ OK044/ OK027	LG		[-]	**PF0660**	95,5×44,1×16	OK030/ OK081
1.5 dCi 90	06/09 →	66	90	LG	(FW0G)	[+]	**PF0662**	131,2×62,3×18,6	OK030/ OK044/ OK027	LG		[-]	**PF0660**	95,5×44,1×16	OK030/ OK081
1.6	02/08 →	64	87	LG		[-]	**PF0661**	131,2×62,3×18,6	OK030/ OK044/ OK027	LG		[-]	**PF0660**	95,5×44,1×16	OK030/ OK081
1.6	02/08 →	64	87	LG		[+]	**PF0662**	131,2×62,3×18,6	OK030/ OK044/ OK027	LG		[-]	**PF0660**	95,5×44,1×16	OK030/ OK081
1.6 16V	02/08 →	78	106	LG		[-]	**PF0661**	131,2×62,3×18,6	OK030/ OK044/ OK027	LG		[-]	**PF0660**	95,5×44,1×16	OK030/ OK081
1.6 16V	02/08 →	78	106	LG		[+]	**PF0662**	131,2×62,3×18,6	OK030/ OK044/ OK027	LG		[-]	**PF0660**	95,5×44,1×16	OK030/ OK081
1.6 16V LPG	02/08 →	72	98	LG		[-]	**PF0661**	131,2×62,3×18,6	OK030/ OK044/ OK027	LG		[-]	**PF0660**	95,5×44,1×16	OK030/ OK081
1.6 16V LPG	02/08 →	72	98	LG		[+]	**PF0662**	131,2×62,3×18,6	OK030/ OK044/ OK027	LG		[-]	**PF0660**	95,5×44,1×16	OK030/ OK081
Laguna I															
1.6i 16V	11/97 → 04/99			LG		[+]	**PF0817**	130×55,6×18	OK032						
1.6i 16V	97 → 04/99			LG	+ABS	[+]	**PF0817**	130×55,6×18	OK032						
1.8i 16V	97 → 04/99			LG	+ABS	[+]	**PF0817**	130×55,6×18	OK032						
1.9 Diesel	→ 04/99			LG	+ABS	[+]	**PF0817**	130×55,6×18	OK032						
2.0i	93 → 97			LG	+ABS	[+]	**PF0817**	130×55,6×18	OK032						
2.0i 16V	97 → 04/99			LG	+ABS	[+]	**PF0817**	130×55,6×18	OK032						
2.0i	97 → 04/99			LG		[+]	**PF0817**	130×55,6×18	OK032						
2.2 D - TD	97 → 04/99			LG	+ABS	[+]	**PF0817**	130×55,6×18	OK032						
2.2 D - TD	97 → 04/99			LG		[+]	**PF0817**	130×55,6×18	OK032						
2.2 TD	97 → 04/99			LG	+ABS	[+]	**PF0817**	130×55,6×18	OK032						
3.0i 24V V6	97 → 04/99			LG		[+]	**PF0817**	130×55,6×18	OK032						
3.0i 24V V6	97 → 04/99			LG		[+]	**PF0817**	130×55,6×18	OK032						
3.0i V6 Baccara	97 → 04/99			LG		[+]	**PF0817**	130×55,6×18	OK032						
3.0i V6	97 → 04/99			LG		[+]	**PF0817**	130×55,6×18	OK032						

		KW	CV	SiS	i	W.i.	MAGNETI MARELLI	W×H×Th (mm)	Extra kit [Opt]	SiS	i	W.i.	MAGNETI MARELLI	W×H×Th (mm)	Extra kit [Opt]
RENAULT															
Laguna II															
1.6i 16V	05/99 → 03/01			LG		[-]	**PF0377**	129×55,6×18	OK032						
1.8i 16V	04/99 →			LG		[-]	**PF0377**	129×55,6×18	OK032						
1.9 Dci	04/99 → 01			LG	(K5)	[-]	**PF0377**	129×55,6×18	OK032						
1.9 TDI	04/99 → 01			LG		[-]	**PF0377**	129×55,6×18	OK032						
2.0i	04/99 → 01			LG		[-]	**PF0377**	129×55,6×18	OK032						
2.2 D	04/99 → 01			LG		[-]	**PF0377**	129×55,6×18	OK032						
2.2 TD	04/99 → 01			LG		[-]	**PF0377**	129×55,6×18	OK032						
3.0i V6	04/99 → 01			LG		[-]	**PF0377**	129×55,6×18	OK032						
Laguna Berlina / SW III															
1.6i 16V	01 →			ATE	16"	[-]	**PF0383**	155,2×68,5×18,2	OK087	ATE		[-]	**PF0349**	123,1×52×16,4	
1.6i 16V	01 →			ATE	15"	[-]	**PF0381**	155,2×66,5×18,0		ATE		[-]	**PF0349**	123,1×52×16,4	
1.8i 16V	01 →			ATE	16"	[-]	**PF0383**	155,2×68,5×18,2	OK087	ATE		[-]	**PF0349**	123,1×52×16,4	
1.8i 16V	01 →			ATE	15"	[-]	**PF0381**	155,2×66,5×18,0		ATE		[-]	**PF0349**	123,1×52×16,4	
1.9 DCI	01 →			ATE	16"	[-]	**PF0383**	155,2×68,5×18,2	OK087	ATE		[-]	**PF0349**	123,1×52×16,4	
1.9 DCI	01 →			ATE	15"	[-]	**PF0381**	155,2×66,5×18,0		ATE		[-]	**PF0349**	123,1×52×16,4	
2.0i 16V	01 →			ATE	16"	[-]	**PF0383**	155,2×68,5×18,2	OK087	ATE		[-]	**PF0349**	123,1×52×16,4	
2.0i 16V	01 →			ATE	15"	[-]	**PF0381**	155,2×66,5×18,0		ATE		[-]	**PF0349**	123,1×52×16,4	
2.2 Dci	01 →			ATE	16"	[-]	**PF0383**	155,2×68,5×18,2	OK087	ATE		[-]	**PF0349**	123,1×52×16,4	
3.0 V6 24V	01 →			ATE	16"	[-]	**PF0571**	155,2×68,5×18,2	OK087	ATE		[-]	**PF0349**	123,1×52×16,4	
Laguna IV (BT0/1)															
1.5 dCi	10/07 →	81	110	ATE	(BT0A) 15"	[-]	**PF0384**	155,2×66,5×18,0		ATE		[-]	**PF0243**	123,1×52×16,4	
1.6 16V	10/07 →	81	110	ATE	15"	[-]	**PF0384**	155,2×66,5×18,0		ATE		[-]	**PF0243**	123,1×52×16,4	
2.0 16V	10/07 →	103	140	ATE	(BT0F) 16"	[-]	**PF0670**	155,2×63,0×18		ATE		[-]	**PF0243**	123,1×52×16,4	
2.0 16V Hi-Flex	10/07 →	103	140	ATE	16"	[-]	**PF0670**	155,2×63,0×18		ATE		[-]	**PF0243**	123,1×52×16,4	
2.0 16V Turbo	10/07 →	125	170	ATE	16"	[-]	**PF0670**	155,2×63,0×18		ATE		[-]	**PF0243**	123,1×52×16,4	
2.0 dCi	10/07 →	96	131	ATE	(BT0K, BT0J, BT1A, BT1D) 16"	[-]	**PF0670**	155,2×63,0×18		ATE		[-]	**PF0243**	123,1×52×16,4	
2.0 dCi	10/07 →	110	150	ATE	(BT01, BT0E, BT0K) 16"	[-]	**PF0670**	155,2×63,0×18		ATE		[-]	**PF0243**	123,1×52×16,4	
2.0 dCi	01/08 →	127	173	ATE	(BT0M, BT0N) 16"	[-]	**PF0671**	155,2×63,0×18		ATE		[-]	**PF0243**	123,1×52×16,4	
2.0 GT	03/08 →	150	204	ATE	16"	[-]	**PF0671**	155,2×63,0×18		ATE		[-]	**PF0243**	123,1×52×16,4	
3.0 dCi	09/08 →	173	235	ATE	(BT13) 16"	[-]	**PF0671**	155,2×63,0×18		ATE		[-]	**PF0243**	123,1×52×16,4	
Laguna Grandtour IV (KT0/1)															
1.5 dCi	10/07 →	81	110	ATE	(KT0A) 15"	[-]	**PF0384**	155,2×66,5×18,0		ATE		[-]	**PF0243**	123,1×52×16,4	
1.6 16V	10/07 →	81	110	ATE	15"	[-]	**PF0384**	155,2×66,5×18,0		ATE		[-]	**PF0243**	123,1×52×16,4	
2.0 16V	10/07 →	103	140	ATE	(KT0F) 16"	[-]	**PF0670**	155,2×63,0×18		ATE		[-]	**PF0243**	123,1×52×16,4	
2.0 16V Hi-Flex	10/07 →	103	140	ATE	16"	[-]	**PF0670**	155,2×63,0×18		ATE		[-]	**PF0243**	123,1×52×16,4	
2.0 16V Turbo	10/07 →	125	170	ATE	16"	[-]	**PF0670**	155,2×63,0×18		ATE		[-]	**PF0243**	123,1×52×16,4	

		KW	CV													
				SiS	i	W.i.	MAGNETI MARELLI	W×H×Th (mm)	Extra kit [Opt]	SiS	i	W.i.	MAGNETI MARELLI	W×H×Th (mm)	Extra kit [Opt]
RENAULT															
Laguna Grandtour IV (KT0/1)															
2.0 dCi	10/07 →	96	131	ATE	(KT01, KT0E, KT0K, KT1D) 16"	[-]	**PF0670**	155,2×63,0×18		ATE		[-]	**PF0243**	123,1×52×16,4	
2.0 dCi	10/07 →	110	150	ATE	(KT0K, KT0J, KT1A, KT1D) 16"	[-]	**PF0670**	155,2×63,0×18		ATE		[-]	**PF0243**	123,1×52×16,4	
2.0 dCi	01/08 →	127	173	ATE	(KT0M, KT0N) 16"	[-]	**PF0671**	155,2×63,0×18		ATE		[-]	**PF0243**	123,1×52×16,4	
2.0 GT	03/08 →	150	204	ATE	16"	[-]	**PF0671**	155,2×63,0×18		ATE		[-]	**PF0243**	123,1×52×16,4	
3.0 dCi	09/08 →	173	235	ATE	(KT13) 16"	[-]	**PF0671**	155,2×63,0×18		ATE		[-]	**PF0243**	123,1×52×16,4	
Laguna Coupé (DT0/1)															
2.0 16V Turbo	09/08 →	125	170	ATE	16"	[-]	**PF0671**	155,2×63,0×18		ATE		[-]	**PF0243**	123,1×52×16,4	
2.0 dCi	10/07 →	110	150	ATE	16"	[-]	**PF0671**	155,2×63,0×18		ATE		[-]	**PF0243**	123,1×52×16,4	
2.0 dCi	09/08 →	127	173	ATE	16"/(DT1M)	[-]	**PF0671**	155,2×63,0×18		ATE		[-]	**PF0243**	123,1×52×16,4	
2.0 dCi GT	03/08 →	131	178	ATE	16"	[-]	**PF0671**	155,2×63,0×18		ATE		[-]	**PF0243**	123,1×52×16,4	
2.0 GT	03/08 →	150	204	ATE	16"	[-]	**PF0671**	155,2×63,0×18		ATE		[-]	**PF0243**	123,1×52×16,4	
3.0 dCi	09/08 →	173	235	ATE	16"/(DT03)	[-]	**PF0671**	155,2×63,0×18		ATE		[-]	**PF0243**	123,1×52×16,4	
3.5 V6	09/08 →	175	238	ATE	16"	[-]	**PF0671**	155,2×63,0×18		ATE		[-]	**PF0243**	123,1×52×16,4	
Latitude															
2.0 16V eco2	02/11 →	103	140	ATE		[-]	**PF0670**	155,2×63,0×18							
2.0 16V	02/11 →	103	140	ATE		[-]	**PF0670**	155,2×63,0×18							
2.0 dCi	02/11 →	130	178	ATE		[-]	**PF0670**	155,2×63,0×18							
2.0 dCi 150	02/11 →	110	150	ATE		[-]	**PF0670**	155,2×63,0×18							
2.5 dCi	05/11 →	133	181	ATE		[-]	**PF0670**	155,2×63,0×18							
3.0 dCi 240	02/11 →	177	241	ATE		[-]	**PF0670**	155,2×63,0×18							
32.0 dCi 175	05/11 →	127	173	ATE		[-]	**PF0670**	155,2×63,0×18							
Mascott															
All types	99 →			BR		[+]	**PF0478**	164,8×68×20		BR		[+]	**PF0527**	164,6×66,5×20	OK060
All types	99 →			BR		[+]	**PF0527**	164,6×66,5×20	OK060	BR		[+]	**PF0527**	164,6×66,5×20	OK060
Master Van II (FD)															
1.9 DTI	→ 07/00			BD		[-]	**PF0544**	138,7×66,4×18							
1.9 DTI	08/00 →			BSC		[-]	**PF0366**	138,8×79,8×17,8		BSC		[-]	**PF0365**	115×51,3×16,8	OK033
1.9 Dci 80	11/01 →			BSC		[-]	**PF0366**	138,8×79,8×17,8		BSC		[-]	**PF0365**	115×51,3×16,8	OK033
2.2 CDI	08/00 →			BSC		[-]	**PF0366**	138,8×79,8×17,8		BSC		[-]	**PF0365**	115×51,3×16,8	OK033
2.5 D	→ 07/00			BD		[-]	**PF0544**	138,7×66,4×18							
2.5 CDI 100	10/03 →			BSC		[-]	**PF0366**	138,8×79,8×17,8		BSC		[-]	**PF0365**	115×51,3×16,8	OK033
2.5 CDI 120	08/00 →			BSC		[-]	**PF0366**	138,8×79,8×17,8		BSC		[-]	**PF0365**	115×51,3×16,8	OK033
2.8 DTI	→ 07/00			BD		[-]	**PF0544**	138,7×66,4×18							
2.8 DTI	08/00 →			BSC		[-]	**PF0366**	138,8×79,8×17,8		BSC		[-]	**PF0365**	115×51,3×16,8	OK033
3.0 Dci 140	10/03 →			BSC		[-]	**PF0366**	138,8×79,8×17,8		BSC		[-]	**PF0365**	115×51,3×16,8	OK033

		KW	CV	SiS	i	W.i.	MAGNETI MARELLI	W×H×Th (mm)	Extra kit [Opt]	SiS	i	W.i.	MAGNETI MARELLI	W×H×Th (mm)	Extra kit [Opt]
RENAULT															
Master Bus II (J/ND)															
1.9 DTI	→ 07/00			BD		[-]	**PF0544**	138,7×66,4×18							
1.9 DTI	08/00 →			BSC		[-]	**PF0366**	138,8×79,8×17,8		BSC		[-]	**PF0365**	115×51,3×16,8	OK033
1.9 Dci 80	11/01 →			BSC		[-]	**PF0366**	138,8×79,8×17,8		BSC		[-]	**PF0365**	115×51,3×16,8	OK033
2.2 CDI	08/00 →			BSC		[-]	**PF0366**	138,8×79,8×17,8		BSC		[-]	**PF0365**	115×51,3×16,8	OK033
2.5 D	→ 07/00			BD		[-]	**PF0544**	138,7×66,4×18							
2.5 CDI 100	10/03 →			BSC		[-]	**PF0366**	138,8×79,8×17,8		BSC		[-]	**PF0365**	115×51,3×16,8	OK033
2.5 CDI 120	08/00 →			BSC		[-]	**PF0366**	138,8×79,8×17,8		BSC		[-]	**PF0365**	115×51,3×16,8	OK033
2.8 DTI	→ 07/00			BD		[-]	**PF0544**	138,7×66,4×18							
2.8 DTI	08/00 →			BSC		[-]	**PF0366**	138,8×79,8×17,8		BSC		[-]	**PF0365**	115×51,3×16,8	OK033
3.0 Dci 140	10/03 →			BSC		[-]	**PF0366**	138,8×79,8×17,8		BSC		[-]	**PF0365**	115×51,3×16,8	OK033
Master Pianale II (E//H/UD)															
1.9 DTI	→ 07/00			BD		[-]	**PF0544**	138,7×66,4×18							
1.9 DTI	08/00 →			BSC		[-]	**PF0366**	138,8×79,8×17,8		BSC		[-]	**PF0365**	115×51,3×16,8	OK033
1.9 Dci 80	11/01 →			BSC		[-]	**PF0366**	138,8×79,8×17,8		BSC		[-]	**PF0365**	115×51,3×16,8	OK033
2.2 CDI	08/00 →			BSC		[-]	**PF0366**	138,8×79,8×17,8		BSC		[-]	**PF0365**	115×51,3×16,8	OK033
2.5 D	→ 07/00			BD		[-]	**PF0544**	138,7×66,4×18							
2.5 CDI 100	10/03 →			BSC		[-]	**PF0366**	138,8×79,8×17,8		BSC		[-]	**PF0365**	115×51,3×16,8	OK033
2.5 CDI 120	08/00 →			BSC		[-]	**PF0366**	138,8×79,8×17,8		BSC		[-]	**PF0365**	115×51,3×16,8	OK033
2.8 DTI	→ 07/00			BD		[-]	**PF0544**	138,7×66,4×18							
2.8 DTI	08/00 →			BSC		[-]	**PF0366**	138,8×79,8×17,8		BSC		[-]	**PF0365**	115×51,3×16,8	OK033
3.0 Dci 140	10/03 →			BSC		[-]	**PF0366**	138,8×79,8×17,8		BSC		[-]	**PF0365**	115×51,3×16,8	OK033
Maxity															
110.28	03/07 →			BR		[+]	**PF0650**	163,2×67,1×20	OK060	BR		[+]	**PF0573**	109,7×49,6×20	OK014
110.32	03/07 →			BR		[+]	**PF0650**	163,2×67,1×20	OK060	BR		[+]	**PF0573**	109,7×49,6×20	OK014
110.35	03/07 →			BR		[+]	**PF0650**	163,2×67,1×20	OK060	BR		[+]	**PF0573**	109,7×49,6×20	OK014
130.45	03/07 →	96	130	BR	4,5 ton.	[+]	**PF0479**	164,8×68×20							
150.45	03/07 →	110	150	BR	4,5 ton.	[+]	**PF0479**	164,8×68×20							
Megane Berlina/SW I (BA/KA)															
1.4	08/95 → 05/99			LG	(BA)	[+]	**PF0203**	99,9×64,8×18	OK030						
1.4i 16V	→ 04/99									LG		[-]	**PF0144**	87×53×15	OK039
1.4	03/99 →			LG	(BA0V) +ABS	[-]	**PF0204**	99,9×64,8×18	OK030						
1.4	03/99 →			LG	(BA0W) +ABS	[-]	**PF0204**	99,9×64,8×18	OK030						
1.4	03/99 →			LG	(KAOV) (KAOW) +ABS	[-]	**PF0204**	99,9×64,8×18	OK030						
1.6	08/95 → 02/99			LG	(BA)	[+]	**PF0203**	99,9×64,8×18	OK030						
1.6	03/99 →			LG	(BAO4) +ABS	[-]	**PF0204**	99,9×64,8×18	OK030						
1.6	03/99 →			LG	(KAOF) +ABS	[-]	**PF0204**	99,9×64,8×18	OK030						
1.6	03/99 → 01/00			LG	(BA) +ABS	[-]	**PF0204**	99,9×64,8×18	OK030						
1.6i 16V	→ 04/99									LG		[-]	**PF0144**	87×53×15	OK039

		KW	CV	SiS	i	W.i.	MAGNETI MARELLI	W×H×Th (mm)	Extra kit [Opt]	SiS	i	W.i.	MAGNETI MARELLI	W×H×Th (mm)	Extra kit [Opt]
RENAULT															
Megane Berlina/SW I (BA/KA)															
1.6i	03/99→			LG	(KA) Ø Disc 280×24	[-]	**PF0377**	129×55,6×18	OK032						
1.6i	03/99→			LG	(LA) Ø Disc 280×24	[-]	**PF0377**	129×55,6×18	OK032						
1.8	01/01→03			LG	(BA) Ø Disc 280×24	[-]	**PF0377**	129×55,6×18	OK032						
1.8	01/01→03			LG	(KA) Ø Disc 280×24	[-]	**PF0377**	129×55,6×18	OK032						
1.9 D	08/95→05/99			LG	(BAOU) (SAOU)	[+]	**PF0203**	99,9×64,8×18	OK030						
1.9 D	03/99→			LG	(BAOR) +ABS	[+]	**PF0203**	99,9×64,8×18	OK030						
1.9 D	03/99→			LG	(KAOR) +ABS	[-]	**PF0204**	99,9×64,8×18	OK030						
1.9 TD	95→11/02	73		LG		[+]	**PF0817**	130×55,6×18	OK032	BD		[-]	**PF0790**	105×56×11	
1.9 TD	08/95→05/99			LG	(BAO9) (BAOK)	[+]	**PF0203**	99,9×64,8×18	OK030	BD		[-]	**PF0790**	105×56×11	
1.9 DTi	→04/99									LG		[-]	**PF0144**	87×53×15	OK039
1.9 Dci	→04/99									LG		[-]	**PF0144**	87×53×15	OK039
1.9 TD	04/99→			LG	(KA) Ø Disc 280×24	[-]	**PF0377**	129×55,6×18	OK032	BD		[-]	**PF0790**	105×56×11	
1.9 TD	02/00→			LG	(LA) Ø Disc 280×24	[-]	**PF0377**	129×55,6×18	OK032	BD		[-]	**PF0790**	105×56×11	
1.9 Dci	04/99→			LG	(BA) Ø Disc 280×24	[-]	**PF0377**	129×55,6×18	OK032	BD		[-]	**PF0790**	105×56×11	
1.9 Dci	04/99→			LG	(KA) Ø Disc 280×24	[-]	**PF0377**	129×55,6×18	OK032	BD		[-]	**PF0790**	105×56×11	
2.0	08/95→05/99			LG	(BAOG) -ABS	[+]	**PF0203**	99,9×64,8×18	OK030	BD		[-]	**PF0790**	105×56×11	
2.0i	03/99→12/02			LG	(OG) Ø Disc 280×24	[-]	**PF0377**	129×55,6×18	OK032	BD		[-]	**PF0790**	105×56×11	
2.0i 16V	95→11/02	108		LG		[+]	**PF0817**	130×55,6×18	OK032	BD		[-]	**PF0790**	105×56×11	
Megane Classic I (LA)															
1.4	02/97→02/99			LG		[+]	**PF0203**	99,9×64,8×18	OK030						
1.4	03/99→03			LG	+ABS	[-]	**PF0204**	99,9×64,8×18	OK030						
1.4	01/01→03			LG	Ø Disc 280×24	[-]	**PF0377**	129×55,6×18	OK032						
1.6	10/96→05/99			LG		[+]	**PF0203**	99,9×64,8×18	OK030						
1.6	03/99→12/99			LG	+ABS	[-]	**PF0204**	99,9×64,8×18	OK030						
1.6 16V	01/01→03			LG	Ø Disc 280×24	[-]	**PF0377**	129×55,6×18	OK032						
1.8	01/01→03			LG	Ø Disc 280×24	[-]	**PF0377**	129×55,6×18	OK032	BD		[-]	**PF0790**	105×56×11	
1.9 D	10/96→05/99			LG		[+]	**PF0203**	99,9×64,8×18	OK030	BD		[-]	**PF0790**	105×56×11	

		KW	CV	SiS	i	W.i.	MAGNETI MARELLI	W×H×Th (mm)	Extra kit [Opt]	SiS	i	W.i.	MAGNETI MARELLI	W×H×Th (mm)	Extra kit [Opt]
RENAULT															
Megane Classic I (LA)															
1.9 D	03/99 → 03			LG	+ABS	[-]	**PF0204**	99,9×64,8×18	OK030	BD		[-]	**PF0790**	105×56×11	
1.9 Dci	01/01 → 03			LG	Ø Disc 280×24	[-]	**PF0377**	129×55,6×18	OK032	BD		[-]	**PF0790**	105×56×11	
1.9 Dti	01/01 → 03			LG	Ø Disc 280×24	[-]	**PF0377**	129×55,6×18	OK032	BD		[-]	**PF0790**	105×56×11	
1.9 TD	10/96 → 05/99			LG		[+]	**PF0203**	99,9×64,8×18	OK030	BD		[-]	**PF0790**	105×56×11	
1.9 TD	01/01 → 03		98	LG	Ø Disc 280×24	[-]	**PF0377**	129×55,6×18	OK032	BD		[-]	**PF0790**	105×56×11	
2.0	10/96 → 05/99			LG	-ABS	[+]	**PF0203**	99,9×64,8×18	OK030	BD		[-]	**PF0790**	105×56×11	
2.0	01/01 → 03			LG	Ø Disc 280×24	[-]	**PF0377**	129×55,6×18	OK032	BD		[-]	**PF0790**	105×56×11	
Megane I Cabriolet (EA)															
1.4	03/99 → 03			LG		[-]	**PF0204**	99,9×64,8×18	OK030						
1.6	02/97 → 05/99			LG	-ABS	[+]	**PF0203**	99,9×64,8×18	OK030						
1.6	03/99 → 12/99			LG	+ABS	[-]	**PF0204**	99,9×64,8×18	OK030						
1.6i 16V	04/99 → 03			LG	+ABS	[-]	**PF0377**	129×55,6×18	OK032						
2.0	02/97 → 02/99			LG	-ABS	[-]	**PF0204**	99,9×64,8×18	OK030	BD		[-]	**PF0790**	105×56×11	
2.0i 16V IDE	→ 04/99									BD		[-]	**PF0790**	105×56×11	
Megane I Coach (DA)															
1.4	03/99 → 03			LG		[-]	**PF0204**	99,9×64,8×18	OK030						
1.6i 16V	99 →	81		LG		[+]	**PF0817**	130×55,6×18	OK032						
1.6	08/95 → 05/99			LG	-ABS	[+]	**PF0203**	99,9×64,8×18	OK030						
1.6	04/99 → 03			LG	+ABS	[-]	**PF0377**	129×55,6×18	OK032						
1.9 Dti	→ 04/99									BD		[-]	**PF0790**	105×56×11	
1.9 Dci	02/01 → 03			LG	+ABS	[-]	**PF0377**	129×55,6×18	OK032	BD		[-]	**PF0790**	105×56×11	
1.9 TD	06/97 → 02/99			LG	-ABS	[-]	**PF0204**	99,9×64,8×18	OK030	BD		[-]	**PF0790**	105×56×11	
1.9 TD	03/99 → 03			LG	+ABS	[-]	**PF0377**	129×55,6×18	OK032	BD		[-]	**PF0790**	105×56×11	
2.0i 16V RT	95 →			LG		[+]	**PF0817**	130×55,6×18	OK032	BD		[-]	**PF0790**	105×56×11	
2.0i RT	95 →			LG		[+]	**PF0817**	130×55,6×18	OK032	BD		[-]	**PF0790**	105×56×11	
2.0i 16V IDE	→ 04/99									BD		[-]	**PF0790**	105×56×11	
2.0	08/95 → 05/99			LG	-ABS	[+]	**PF0203**	99,9×64,8×18	OK030	BD		[-]	**PF0790**	105×56×11	
2.0	04/99 → 03			LG	+ABS	[-]	**PF0377**	129×55,6×18	OK032	BD		[-]	**PF0790**	105×56×11	
Megane Van (SA)															
1.9 D	03/99 → 09/00			LG	+ABS	[-]	**PF0204**	99,9×64,8×18	OK030						
1.9 TD	02/00 → 09/00			LG	+ABS	[-]	**PF0377**	129×55,6×18	OK032						
Megane Berlina II (BM)															
1.4 16V	12/02 → 10/03	72		BSC		[-]	**PF0600**	122,9×54,3×18,3	OK012/ OK038	LG		[-]	**PF0432**	87×53×16	OK039
1.4 16V	10/03 →	72		BSC		[-]	**PF0693**	123,3×49,3×17,8	OK033/ OK040	LG		[-]	**PF0432**	87×53×16	OK039
1.4 16V	10/03 →	72		ATE	Ø Disc 280×24/15"	[-]	**PF0381**	155,2×66,5×18,0		LG		[-]	**PF0432**	87×53×16	OK039
1.5 DCi	12/02 → 08			BSC		[-]	**PF0380**	136,8×59,2×18,1	OK012/ OK038	LG		[-]	**PF0432**	87×53×16	OK039

		KW	CV													
				SiS	i	W.i.	MAGNETI MARELLI	W×H×Th (mm)	Extra kit [Opt]	SiS	i	W.i.	MAGNETI MARELLI	W×H×Th (mm)	Extra kit [Opt]
RENAULT															
Megane Berlina II (BM)															
1.5 Dci	12/02 → 08			ATE	Ø Disc 280×24/15"	[-]	**PF0381**	155,2×66,5×18,0		LG		[-]	**PF0432**	87×53×16	OK039
1.5 Dci	10/03 → 08	74		BSC		[-]	**PF0380**	136,8×59,2×18,1	OK012/ OK038	LG		[-]	**PF0432**	87×53×16	OK039
1.5 Dci	10/03 → 08	74		ATE	Ø Disc 280×24/15"	[-]	**PF0381**	155,2×66,5×18,0		LG		[-]	**PF0432**	87×53×16	OK039
1.6 16V	12/02 → 08			BSC		[-]	**PF0380**	136,8×59,2×18,1	OK012/ OK038	LG		[-]	**PF0432**	87×53×16	OK039
1.6 16V	12/02 → 08			ATE	Ø Disc 280×24/15"	[-]	**PF0381**	155,2×66,5×18,0		LG		[-]	**PF0432**	87×53×16	OK039
1.9 DCi	12/02 → 08			BSC		[-]	**PF0380**	136,8×59,2×18,1	OK012/ OK038	LG		[-]	**PF0432**	87×53×16	OK039
1.9 Dci	12/02 → 08			ATE	Ø Disc 280×24/15"	[-]	**PF0381**	155,2×66,5×18,0		LG		[-]	**PF0432**	87×53×16	OK039
2.0 16V	12/02 → 08			BSC		[-]	**PF0380**	136,8×59,2×18,1	OK012/ OK038	LG		[-]	**PF0432**	87×53×16	OK039
2.0 16V	12/02 → 08			ATE	Ø Disc 280×24/15"	[-]	**PF0381**	155,2×66,5×18,0		LG		[-]	**PF0432**	87×53×16	OK039
2.0 16V Sport	03/04 → 08			BR		[-]	**PF0590**	124,8×70,8×15,1		ATE		[-]	**PF0431**	123,1×52×16,4	
Megane Berlina 4Door II															
1.4 16V	09/03 → 10/03			BSC		[-]	**PF0600**	122,9×54,3×18,3	OK012/ OK038	LG		[-]	**PF0432**	87×53×16	OK039
1.4 16V	10/03 →			BSC		[-]	**PF0693**	123,3×49,3×17,8	OK033/ OK040	LG		[-]	**PF0432**	87×53×16	OK039
1.4 16V	10/03 →			ATE	Ø Disc 280×24/15"	[-]	**PF0381**	155,2×66,5×18,0		LG		[-]	**PF0432**	87×53×16	OK039
1.5 Dci	09/03 → 08			BSC		[-]	**PF0380**	136,8×59,2×18,1	OK012/ OK038	LG		[-]	**PF0432**	87×53×16	OK039
1.5 Dci	09/03 → 08			ATE	Ø Disc 280×24/15"	[-]	**PF0381**	155,2×66,5×18,0		LG		[-]	**PF0432**	87×53×16	OK039
1.6 16V	09/03 → 08			BSC		[-]	**PF0380**	136,8×59,2×18,1	OK012/ OK038	LG		[-]	**PF0432**	87×53×16	OK039
1.6 16V	09/03 → 08			ATE	Ø Disc 280×24/15"	[-]	**PF0381**	155,2×66,5×18,0		LG		[-]	**PF0432**	87×53×16	OK039
1.9 Dci	09/03 → 08			BSC		[-]	**PF0380**	136,8×59,2×18,1	OK012/ OK038	LG		[-]	**PF0432**	87×53×16	OK039
1.9 Dci	09/03 → 08			ATE	Ø Disc 280×24/15"	[-]	**PF0381**	155,2×66,5×18,0		LG		[-]	**PF0432**	87×53×16	OK039
2.0 16V	09/03 → 08			BSC		[-]	**PF0380**	136,8×59,2×18,1	OK012/ OK038	LG		[-]	**PF0432**	87×53×16	OK039
2.0 16V	09/03 → 08			ATE	Ø Disc 280×24/15"	[-]	**PF0381**	155,2×66,5×18,0		LG		[-]	**PF0432**	87×53×16	OK039

		KW	CV	SiS	i	W.i.	MAGNETI MARELLI	W×H×Th (mm)	Extra kit [Opt]	SiS	i	W.i.	MAGNETI MARELLI	W×H×Th (mm)	Extra kit [Opt]
RENAULT															
Megane 3 Volumi (LM0/1_)															
1.4	09/03 →	60	82	BSC		[-]	**PF0693**	123,3×49,3×17,8	OK033/ OK040						
1.4	09/03 →	60	82	ATE	Ø Disc 280×24/15"	[-]	**PF0381**	155,2×66,5×18,0							
1.4	09/03 →	72	98	BSC		[-]	**PF0693**	123,3×49,3×17,8	OK033/ OK040						
1.4	09/03 →	72	98	ATE	Ø Disc 280×24/15"	[-]	**PF0381**	155,2×66,5×18,0							
1.5 dCi	09/03 →			BSC		[-]	**PF0693**	123,3×49,3×17,8	OK033/ OK040						
1.5 dCi	09/03 →			ATE	Ø Disc 280×24/15"	[-]	**PF0381**	155,2×66,5×18,0							
1.6 16V	01/07 →			BSC		[-]	**PF0693**	123,3×49,3×17,8	OK033/ OK040						
1.6 16V	01/07 →			ATE	Ø Disc 280×24/15"	[-]	**PF0381**	155,2×66,5×18,0							
1.6 Hi-Flex	03/06 →	85	116	BSC		[-]	**PF0693**	123,3×49,3×17,8	OK033/ OK040						
1.6 Hi-Flex	03/06 →	85	116	ATE	Ø Disc 280×24/15"	[-]	**PF0381**	155,2×66,5×18,0							
1.9 dCi	03/04 →	68	92	BSC		[-]	**PF0693**	123,3×49,3×17,8	OK033/ OK040						
1.9 dCi	03/04 →	68	92	ATE	Ø Disc 280×24/15"	[-]	**PF0381**	155,2×66,5×18,0							
1.9 dCi	09/03 → 12/05	66	90	BSC		[-]	**PF0693**	123,3×49,3×17,8	OK033/ OK040						
1.9 dCi	09/03 → 12/05	66	90	ATE	Ø Disc 280×24/15"	[-]	**PF0381**	155,2×66,5×18,0							
1.9 dCi	05/05 →	96	131	BSC		[-]	**PF0693**	123,3×49,3×17,8	OK033/ OK040						
1.9 dCi	05/05 →	96	131	ATE	Ø Disc 280×24/15"	[-]	**PF0381**	155,2×66,5×18,0							
1.9 dCi	09/03 →	88	120	BSC	(LM0G, LM1G, LM2C)	[-]	**PF0693**	123,3×49,3×17,8	OK033/ OK040						
1.9 dCi	09/03 →	88	120	ATE	(LM0G, LM1G, LM2C) Ø Disc 280×24/15"	[-]	**PF0381**	155,2×66,5×18,0							
1.9 dCi	05/05 →	81	110	BSC	(LM14, LM1D)	[-]	**PF0693**	123,3×49,3×17,8	OK033/ OK040						

		KW	CV	SiS	i	W.i.	MAGNETI MARELLI	W×H×Th (mm)	Extra kit [Opt]	SiS	i	W.i.	MAGNETI MARELLI	W×H×Th (mm)	Extra kit [Opt]
RENAULT															
Megane 3 Volumi (LM0/1_)															
1.9 dCi	05/05→	81	110	ATE	(LM14, LM1D) Ø Disc 280×24/15"	[-]	**PF0381**	155,2×66,5×18,0							
2.0	09/03→	99	135	BSC		[-]	**PF0693**	123,3×49,3×17,8	OK033/ OK040						
2.0	09/03→	99	135	ATE	Ø Disc 280×24/15"	[-]	**PF0381**	155,2×66,5×18,0							
2.0 dCi	09/05→	110	150	BSC		[-]	**PF0693**	123,3×49,3×17,8	OK033/ OK040						
2.0 dCi	09/05→	110	150	ATE	Ø Disc 280×24/15"	[-]	**PF0381**	155,2×66,5×18,0							
Megane SW II (KM0/1_)															
1.4	12/02→ 10/03			BSC		[-]	**PF0600**	122,9×54,3×18,3	OK012/ OK038	LG		[-]	**PF0432**	87×53×16	OK039
1.4 16V	08/03→	72	98	BSC		[-]	**PF0693**	123,3×49,3×17,8	OK033/ OK040	LG		[-]	**PF0432**	87×53×16	OK039
1.4 16V	08/03→	72	98	ATE	Ø Disc 280×24/15"	[-]	**PF0381**	155,2×66,5×18,0		LG		[-]	**PF0432**	87×53×16	OK039
1.5 DCi	12/02→ 09			BSC		[-]	**PF0380**	136,8×59,2×18,1	OK012/ OK038	LG		[-]	**PF0432**	87×53×16	OK039
1.5 Dci	12/02→ 09			ATE	Ø Disc 280×24/15"	[-]	**PF0381**	155,2×66,5×18,0		LG		[-]	**PF0432**	87×53×16	OK039
1.6	08/03→	83	113	BSC		[-]	**PF0380**	136,8×59,2×18,1	OK012/ OK038	LG		[-]	**PF0432**	87×53×16	OK039
1.6	08/03→	83	113	ATE	Ø Disc 280×24/15"	[-]	**PF0381**	155,2×66,5×18,0		LG		[-]	**PF0432**	87×53×16	OK039
1.6 16V	01/07→	82	112	BSC		[-]	**PF0380**	136,8×59,2×18,1	OK012/ OK038	LG		[-]	**PF0432**	87×53×16	OK039
1.6 16V	01/07→	82	112	ATE	Ø Disc 280×24/15"	[-]	**PF0381**	155,2×66,5×18,0		LG		[-]	**PF0432**	87×53×16	OK039
1.6 16V Hi-Flex	02/08→	77	105	BSC		[-]	**PF0380**	136,8×59,2×18,1	OK012/ OK038	LG		[-]	**PF0432**	87×53×16	OK039
1.6 16V Hi-Flex	02/08→	77	105	ATE	Ø Disc 280×24/15"	[-]	**PF0381**	155,2×66,5×18,0		LG		[-]	**PF0432**	87×53×16	OK039
1.9 DCi	12/02→ 09			BSC		[-]	**PF0380**	136,8×59,2×18,1	OK012/ OK038	LG		[-]	**PF0432**	87×53×16	OK039
1.9 Dci	12/02→ 09			ATE	Ø Disc 280×24/15"	[-]	**PF0381**	155,2×66,5×18,0		LG		[-]	**PF0432**	87×53×16	OK039
2.0	08/03→	99	135	BSC		[-]	**PF0380**	136,8×59,2×18,1	OK012/ OK038	LG		[-]	**PF0432**	87×53×16	OK039
2.0	08/03→	99	135	ATE	Ø Disc 280×24/15"	[-]	**PF0381**	155,2×66,5×18,0		LG		[-]	**PF0432**	87×53×16	OK039

		KW	CV	SiS	i	W.i.	MAGNETI MARELLI	W×H×Th (mm)	Extra kit [Opt]	SiS	i	W.i.	MAGNETI MARELLI	W×H×Th (mm)	Extra kit [Opt]
RENAULT															
Megane SW II (KM0/1_)															
2.0 dCi	09/05→	110	150	BSC		[-]	**PF0380**	136,8×59,2×18,1	OK012/ OK038	LG		[-]	**PF0432**	87×53×16	OK039
2.0 dCi	09/05→	110	150	ATE	Ø Disc 280×24/15"	[-]	**PF0381**	155,2×66,5×18,0		LG		[-]	**PF0432**	87×53×16	OK039
Megane III 3 Volumi															
1.6 16V	06/09→	82	112	ATE		[-]	**PF0429**	155,3×64,5×17,9		LG		[-]	**PF0348**	87×53×16	OK039
1.9 dCi	06/09→	96	130	ATE		[-]	**PF0429**	155,3×64,5×17,9		LG	+HB el.	[-]	**PF0382**	106,1×45,5×16	OK039/ OK080
Megane Berlina III (BZ0_)															
1.4 TCe	04/09→	96	131	ATE		[-]	**PF0429**	155,3×64,5×17,9		LG		[-]	**PF0348**	87×53×16	OK039
1.4 TCe	04/09→	96	131	ATE	Ø Disc 296×26 FN3/57	[-]	**PF0672**	155,2×63,0×18		LG		[-]	**PF0348**	87×53×16	OK039
1.5 dCi	02/09→	78	106	ATE		[-]	**PF0429**	155,3×64,5×17,9		LG	+HB el.	[-]	**PF0382**	106,1×45,5×16	OK039/ OK080
1.5 dCi	02/09→	78	106	ATE	Ø Disc 296×26 FN3/57	[-]	**PF0672**	155,2×63,0×18		LG	+HB el.	[-]	**PF0382**	106,1×45,5×16	OK039/ OK080
1.5 dCi	12/09→	63	86	ATE		[-]	**PF0429**	155,3×64,5×17,9		LG	+HB el.	[-]	**PF0382**	106,1×45,5×16	OK039/ OK080
1.5 dCi	12/09→	63	86	ATE	Ø Disc 296×26 FN3/57	[-]	**PF0672**	155,2×63,0×18		LG	+HB el.	[-]	**PF0382**	106,1×45,5×16	OK039/ OK080
1.5 dCi	11/08→	96	131	ATE		[-]	**PF0429**	155,3×64,5×17,9		LG	+HB el.	[-]	**PF0382**	106,1×45,5×16	OK039/ OK080
1.5 dCi	11/08→	96	131	ATE	Ø Disc 296×26 FN3/57	[-]	**PF0672**	155,2×63,0×18		LG	+HB el.	[-]	**PF0382**	106,1×45,5×16	OK039/ OK080
1.5 dCi	11/08→	66	90	ATE	(BZ0C)	[-]	**PF0429**	155,3×64,5×17,9		LG	+HB el.	[-]	**PF0382**	106,1×45,5×16	OK039/ OK080
1.5 dCi	11/08→	66	90	ATE	(BZ0C) Ø Disc 296×26 FN3/57	[-]	**PF0672**	155,2×63,0×18		LG	+HB el.	[-]	**PF0382**	106,1×45,5×16	OK039/ OK080
1.5 dCi	02/09→	81	110	ATE	(BZ0D)	[-]	**PF0429**	155,3×64,5×17,9		LG	+HB el.	[-]	**PF0382**	106,1×45,5×16	OK039/ OK080
1.5 dCi	02/09→	81	110	ATE	(BZ0D) Ø Disc 296×26 FN3/57	[-]	**PF0672**	155,2×63,0×18		LG	+HB el.	[-]	**PF0382**	106,1×45,5×16	OK039/ OK080
1.6 16V	11/08→	74	101	ATE	(BZ0H)	[-]	**PF0429**	155,3×64,5×17,9		LG	+HB el.	[-]	**PF0382**	106,1×45,5×16	OK039/ OK080

		KW	CV	SiS	i	W.i.	MAGNETI MARELLI	W×H×Th (mm)	Extra kit [Opt]	SiS	i	W.i.	MAGNETI MARELLI	W×H×Th (mm)	Extra kit [Opt]
RENAULT															
Megane Berlina III (BZ0_)															
1.6 16V	11/08→	74	101	ATE	(BZ0H) Ø Disc 296×26 FN3/57	[-]	**PF0672**	155,2×63,0×18		LG	+HB el.	[-]	**PF0382**	106,1×45,5×16	OK039/ OK080
1.6 16V	11/08→	81	110	ATE	(BZ0U)	[-]	**PF0429**	155,3×64,5×17,9		LG	+HB el.	[-]	**PF0382**	106,1×45,5×16	OK039/ OK080
1.6 16V	11/08→	81	110	ATE	(BZ0U) Ø Disc 296×26 FN3/57	[-]	**PF0672**	155,2×63,0×18		LG	+HB el.	[-]	**PF0382**	106,1×45,5×16	OK039/ OK080
1.6 16V Bifuel	11/08→	81	110	ATE		[-]	**PF0429**	155,3×64,5×17,9		LG	+HB el.	[-]	**PF0382**	106,1×45,5×16	OK039/ OK080
1.6 16V Bifuel	11/08→	81	110	ATE	Ø Disc 296×26 FN3/57	[-]	**PF0672**	155,2×63,0×18		LG	+HB el.	[-]	**PF0382**	106,1×45,5×16	OK039/ OK080
1.6 dCi	04/11→	96	130	ATE	(BZ00, BZ12)	[-]	**PF0429**	155,3×64,5×17,9		LG	+HB el.	[-]	**PF0382**	106,1×45,5×16	OK039/ OK080
1.6 dCi	04/11→	96	130	ATE	(BZ00, BZ12) Ø Disc 296×26 FN3/57	[-]	**PF0672**	155,2×63,0×18		LG	+HB el.	[-]	**PF0382**	106,1×45,5×16	OK039/ OK080
1.9 dCi	11/08→	96	131	ATE	(BZ0N, BZ0J)	[-]	**PF0429**	155,3×64,5×17,9		LG	+HB el.	[-]	**PF0382**	106,1×45,5×16	OK039/ OK080
1.9 dCi	11/08→	96	131	ATE	(BZ0N, BZ0J) Ø Disc 296×26 FN3/57	[-]	**PF0672**	155,2×63,0×18		LG	+HB el.	[-]	**PF0382**	106,1×45,5×16	OK039/ OK080
2.0 CVT	02/09→	103	140	ATE	(BZ0G)	[-]	**PF0429**	155,3×64,5×17,9		LG	+HB el.	[-]	**PF0382**	106,1×45,5×16	OK039/ OK080
2.0 CVT	02/09→	103	140	ATE	(BZ0G) Ø Disc 296×26 FN3/57	[-]	**PF0672**	155,2×63,0×18		LG	+HB el.	[-]	**PF0382**	106,1×45,5×16	OK039/ OK080
2.0 dCi	10/10→	110	150	ATE		[-]	**PF0429**	155,3×64,5×17,9		LG	+HB el.	[-]	**PF0382**	106,1×45,5×16	OK039/ OK080
2.0 dCi	10/10→	110	150	ATE	Ø Disc 296×26 FN3/57	[-]	**PF0672**	155,2×63,0×18		LG	+HB el.	[-]	**PF0382**	106,1×45,5×16	OK039/ OK080
2.0 dCi	04/09→	118	160	ATE		[-]	**PF0429**	155,3×64,5×17,9		LG	+HB el.	[-]	**PF0382**	106,1×45,5×16	OK039/ OK080
2.0 dCi	04/09→	118	160	ATE	Ø Disc 296×26 FN3/57	[-]	**PF0672**	155,2×63,0×18		LG	+HB el.	[-]	**PF0382**	106,1×45,5×16	OK039/ OK080

		KW	CV	SiS	i	W.i.	MAGNETI MARELLI	W×H×Th (mm)	Extra kit [Opt]	SiS	i	W.i.	MAGNETI MARELLI	W×H×Th (mm)	Extra kit [Opt]
RENAULT															
Megane Berlina III (BZ0_)															
2.0 Tce	11/08→	132	180	ATE	(BZ0K)	[-]	**PF0429**	155,3×64,5×17,9		LG	+HB el.	[-]	**PF0382**	106,1×45,5×16	OK039/ OK080
2.0 TCe	11/08→	132	180	ATE	(BZ0K) Ø Disc 296×26 FN3/57	[-]	**PF0672**	155,2×63,0×18		LG	+HB el.	[-]	**PF0382**	106,1×45,5×16	OK039/ OK080
Megane Grandtour III (KZ0/1)															
1.4 TCe	05/09→	96	130	ATE	(KZ0F, KZ1F)	[-]	**PF0429**	155,3×64,5×17,9		LG		[-]	**PF0348**	87×53×16	OK039
1.4 TCe	05/09→	96	130	ATE	(KZ0F, KZ1F) Ø Disc 296×26 FN3/57	[-]	**PF0672**	155,2×63,0×18		LG		[-]	**PF0348**	87×53×16	OK039
1.5 dCi	05/09→	66	90	ATE	(KZ0C, KZ1A)	[-]	**PF0429**	155,3×64,5×17,9		LG	+HB el.	[-]	**PF0382**	106,1×45,5×16	OK039/ OK080
1.5 dCi	05/09→	66	90	ATE	(KZ0C, KZ1A) Ø Disc 296×26 FN3/57	[-]	**PF0672**	155,2×63,0×18		LG	+HB el.	[-]	**PF0382**	106,1×45,5×16	OK039/ OK080
1.5 dCi	02/09→	81	110	ATE	(KZ0D, KZ09, KZ1G)	[-]	**PF0429**	155,3×64,5×17,9		LG	+HB el.	[-]	**PF0382**	106,1×45,5×16	OK039/ OK080
1.5 dCi	02/09→	81	110	ATE	(KZ0D, KZ09, KZ1G) Ø Disc 296×26 FN3/57	[-]	**PF0672**	155,2×63,0×18		LG	+HB el.	[-]	**PF0382**	106,1×45,5×16	OK039/ OK080
1.5 dCi	02/09→	78	106	ATE	(KZ1M, KZ1W)	[-]	**PF0429**	155,3×64,5×17,9		LG	+HB el.	[-]	**PF0382**	106,1×45,5×16	OK039/ OK080
1.5 dCi	02/09→	78	106	ATE	(KZ1M, KZ1W) Ø Disc 296×26 FN3/57	[-]	**PF0672**	155,2×63,0×18		LG	+HB el.	[-]	**PF0382**	106,1×45,5×16	OK039/ OK080
1.6 16V	05/09→	74	101	ATE	(KZ0H)	[-]	**PF0429**	155,3×64,5×17,9		LG	+HB el.	[-]	**PF0382**	106,1×45,5×16	OK039/ OK080
1.6 16V	05/09→	74	101	ATE	(KZ0H) Ø Disc 296×26 FN3/57	[-]	**PF0672**	155,2×63,0×18		LG	+HB el.	[-]	**PF0382**	106,1×45,5×16	OK039/ OK080
1.6 16V	05/09→	81	110	ATE	(KZ0U, KZ1B, KZ1U)	[-]	**PF0429**	155,3×64,5×17,9		LG	+HB el.	[-]	**PF0382**	106,1×45,5×16	OK039/ OK080

		KW	CV	SiS	i	W.i.	MAGNETI MARELLI	W×H×Th (mm)	Extra kit [Opt]	SiS	i	W.i.	MAGNETI MARELLI	W×H×Th (mm)	Extra kit [Opt]
RENAULT															
Megane Grandtour III (KZ0/1)															
1.6 16V	05/09→	81	110	ATE	(KZ0U, KZ1B, KZ1U) Ø Disc 296×26 FN3/57	[-]	**PF0672**	155,2×63,0×18		LG	+HB el.	[-]	**PF0382**	106,1×45,5×16	OK039/ OK080
1.6 16V Bifuel	11/08→	81	110	ATE	(KZ03)	[-]	**PF0429**	155,3×64,5×17,9		LG	+HB el.	[-]	**PF0382**	106,1×45,5×16	OK039/ OK080
1.6 16V Bifuel	11/08→	81	110	ATE	(KZ03) Ø Disc 296×26 FN3/57	[-]	**PF0672**	155,2×63,0×18		LG	+HB el.	[-]	**PF0382**	106,1×45,5×16	OK039/ OK080
1.9 dCi	05/09→	96	131	ATE	(KZ0N, KZ0J, KZ1S)	[-]	**PF0429**	155,3×64,5×17,9		LG	+HB el.	[-]	**PF0382**	106,1×45,5×16	OK039/ OK080
1.9 dCi	05/09→	96	131	ATE	(KZ0N, KZ0J, KZ1S) Ø Disc 296×26 FN3/57	[-]	**PF0672**	155,2×63,0×18		LG	+HB el.	[-]	**PF0382**	106,1×45,5×16	OK039/ OK080
2.0 CVT	05/09→	103	140	ATE	(KZ0G, KZ1P)	[-]	**PF0429**	155,3×64,5×17,9		LG	+HB el.	[-]	**PF0382**	106,1×45,5×16	OK039/ OK080
2.0 CVT	05/09→	103	140	ATE	(KZ0G, KZ1P) Ø Disc 296×26 FN3/57	[-]	**PF0672**	155,2×63,0×18		LG	+HB el.	[-]	**PF0382**	106,1×45,5×16	OK039/ OK080
2.0 dCi	04/09→	118	160	ATE	(KZ0L)	[-]	**PF0670**	155,2×63,0×18		LG	+HB el.	[-]	**PF0382**	106,1×45,5×16	OK039/ OK080
2.0 dCi	04/09→	118	160	ATE	(KZ0L) Ø Disc 296×26 FN3/57	[-]	**PF0672**	155,2×63,0×18		LG	+HB el.	[-]	**PF0382**	106,1×45,5×16	OK039/ OK080
2.0 dCi	10/10→	110	150	ATE	(KZ0Y)	[-]	**PF0429**	155,3×64,5×17,9		LG	+HB el.	[-]	**PF0382**	106,1×45,5×16	OK039/ OK080
2.0 dCi	10/10→	110	150	ATE	(KZ0Y) Ø Disc 296×26 FN3/57	[-]	**PF0672**	155,2×63,0×18		LG	+HB el.	[-]	**PF0382**	106,1×45,5×16	OK039/ OK080
2.0 TCe	11/08→	132	180	ATE	(KZ0K, KZ1T)	[-]	**PF0670**	155,2×63,0×18		LG	+HB el.	[-]	**PF0382**	106,1×45,5×16	OK039/ OK080
2.0 Tce	11/08→	132	180	ATE	(KZ0K, KZ1T) Ø Disc 296×26 FN3/57	[-]	**PF0672**	155,2×63,0×18		LG	+HB el.	[-]	**PF0382**	106,1×45,5×16	OK039/ OK080

		KW	CV	SiS	i	W.i.	MAGNETI MARELLI	W×H×Th (mm)	Extra kit [Opt]	SiS	i	W.i.	MAGNETI MARELLI	W×H×Th (mm)	Extra kit [Opt]
RENAULT															
Megane III Coupé (DZ0/1_)															
1.4 TCe	04/09→	96	131	ATE	(DZ0F, DZ1V)	[-]	**PF0429**	155,3×64,5×17,9		LG		[-]	**PF0348**	87×53×16	OK039
1.4 TCe	04/09→	96	131	ATE	(DZ0F, DZ1V) Ø Disc 296×26 FN3/57	[-]	**PF0672**	155,2×63,0×18		LG		[-]	**PF0348**	87×53×16	OK039
1.5 dCi	11/08→	63	86	ATE	(DZ0A)	[-]	**PF0429**	155,3×64,5×17,9		LG	+HB el.	[-]	**PF0382**	106,1×45,5×16	OK039/ OK080
1.5 dCi	11/08→	63	86	ATE	(DZ0A) Ø Disc 296×26 FN3/57	[-]	**PF0672**	155,2×63,0×18		LG	+HB el.	[-]	**PF0382**	106,1×45,5×16	OK039/ OK080
1.5 dCi	02/09→	78	106	ATE	(DZ0B)	[-]	**PF0429**	155,3×64,5×17,9		LG		[-]	**PF0348**	87×53×16	OK039
1.5 dCi	02/09→	78	106	ATE	(DZ0B) Ø Disc 296×26 FN3/57	[-]	**PF0672**	155,2×63,0×18		LG		[-]	**PF0348**	87×53×16	OK039
1.5 dCi	11/08→	66	90	ATE	(DZ0C, DZ1A)	[-]	**PF0429**	155,3×64,5×17,9		LG	+HB el.	[-]	**PF0382**	106,1×45,5×16	OK039/ OK080
1.5 dCi	11/08→	66	90	ATE	(DZ0C, DZ1A) Ø Disc 296×26 FN3/57	[-]	**PF0672**	155,2×63,0×18		LG	+HB el.	[-]	**PF0382**	106,1×45,5×16	OK039/ OK080
1.5 dCi	02/09→	81	110	ATE	(DZ0D, DZ1F, DZ1G)	[-]	**PF0429**	155,3×64,5×17,9		LG		[-]	**PF0348**	87×53×16	OK039
1.5 dCi	02/09→	81	110	ATE	(DZ0D, DZ1F, DZ1G) Ø Disc 296×26 FN3/57	[-]	**PF0672**	155,2×63,0×18		LG		[-]	**PF0348**	87×53×16	OK039
1.6 16V	11/08→	74	101	ATE	(DZ0H)	[-]	**PF0429**	155,3×64,5×17,9		LG	+HB el.	[-]	**PF0382**	106,1×45,5×16	OK039/ OK080
1.6 16V	11/08→	74	101	ATE	(DZ0H) Ø Disc 296×26 FN3/57	[-]	**PF0672**	155,2×63,0×18		LG	+HB el.	[-]	**PF0382**	106,1×45,5×16	OK039/ OK080
1.6 16V	11/08→	81	110	ATE	(DZ0U, DZ03, DZ1H)	[-]	**PF0429**	155,3×64,5×17,9		LG	+HB el.	[-]	**PF0382**	106,1×45,5×16	OK039/ OK080

RENAULT

Megane III Coupé (DZ0/1_)

		KW	CV	SiS	i	W.i.	MAGNETI MARELLI	W×H×Th (mm)	Extra kit [Opt]	SiS	i	W.i.	MAGNETI MARELLI	W×H×Th (mm)	Extra kit [Opt]
1.6 16V	11/08→	81	110	ATE	(DZ0U, DZ03, DZ1H) Ø Disc 296×26 FN3/57	[-]	**PF0672**	155,2×63,0×18		LG	+HB el.	[-]	**PF0382**	106,1×45,5×16	OK039/ OK080
1.6 16V Bifuel	11/08→	81	110	ATE	(DZ03, DZ1Y)	[-]	**PF0429**	155,3×64,5×17,9		LG	+HB el.	[-]	**PF0382**	106,1×45,5×16	OK039/ OK080
1.6 16V Bifuel	11/08→	81	110	ATE	(DZ03, DZ1Y) Ø Disc 296×26 FN3/57	[-]	**PF0672**	155,2×63,0×18		LG	+HB el.	[-]	**PF0382**	106,1×45,5×16	OK039/ OK080
1.6 dCi	04/11→	96	130	ATE	(DZ00)	[-]	**PF0429**	155,3×64,5×17,9		LG	+HB el.	[-]	**PF0382**	106,1×45,5×16	OK039/ OK080
1.6 dCi	04/11→	96	130	ATE	(DZ00) Ø Disc 296×26 FN3/57	[-]	**PF0672**	155,2×63,0×18		LG	+HB el.	[-]	**PF0382**	106,1×45,5×16	OK039/ OK080
1.9 dCi	11/08→	96	131	ATE	(DZ0N, DZ0J, DZ1J, DZ1K)	[-]	**PF0429**	155,3×64,5×17,9		LG	+HB el.	[-]	**PF0382**	106,1×45,5×16	OK039/ OK080
1.9 dCi	11/08→	96	131	ATE	(DZ0N, DZ0J, DZ1J, DZ1K) Ø Disc 296×26 FN3/57	[-]	**PF0672**	155,2×63,0×18		LG	+HB el.	[-]	**PF0382**	106,1×45,5×16	OK039/ OK080
2.0 CVT	05/09→	103	140	ATE	(DZ0G, DZ1E)	[-]	**PF0429**	155,3×64,5×17,9		LG	+HB el.	[-]	**PF0382**	106,1×45,5×16	OK039/ OK080
2.0 CVT	05/09→	103	140	ATE	(DZ0G, DZ1E) Ø Disc 296×26 FN3/57	[-]	**PF0672**	155,2×63,0×18		LG	+HB el.	[-]	**PF0382**	106,1×45,5×16	OK039/ OK080
2.0 dCi	04/09→	118	160	ATE	(DZ0L)	[-]	**PF0429**	155,3×64,5×17,9		LG	+HB el.	[-]	**PF0382**	106,1×45,5×16	OK039/ OK080
2.0 dCi	04/09→	118	160	ATE	(DZ0L) Ø Disc 296×26 FN3/57	[-]	**PF0672**	155,2×63,0×18		LG	+HB el.	[-]	**PF0382**	106,1×45,5×16	OK039/ OK080
2.0 dCi	04/09→	110	150	ATE	(DZ0Y)	[-]	**PF0429**	155,3×64,5×17,9		LG	+HB el.	[-]	**PF0382**	106,1×45,5×16	OK039/ OK080
2.0 dCi	04/09→	110	150	ATE	(DZ0Y) Ø Disc 296×26 FN3/57	[-]	**PF0672**	155,2×63,0×18		LG	+HB el.	[-]	**PF0382**	106,1×45,5×16	OK039/ OK080

		KW	CV													
				SiS	i	W.i.	MAGNETI MARELLI	W×H×Th (mm)	Extra kit [Opt]	SiS	i	W.i.	MAGNETI MARELLI	W×H×Th (mm)	Extra kit [Opt]
RENAULT																
Megane III Coupé (DZ0/1_)																
2.0 TCe	11/08→	132	180	ATE	(DZ0K)	[-]	**PF0670**	155,2×63,0×18		LG	+HB el.	[-]	**PF0382**	106,1×45,5×16	OK039/ OK080
2.0 TCe	11/08→	132	180	ATE	(DZ0K) Ø Disc 296×26 FN3/57	[-]	**PF0672**	155,2×63,0×18		LG	+HB el.	[-]	**PF0382**	106,1×45,5×16	OK039/ OK080
2.0 TCe	05/09→	184	250	ATE	(DZ1N)	[-]	**PF0670**	155,2×63,0×18		LG	+HB el.	[-]	**PF0382**	106,1×45,5×16	OK039/ OK080
2.0 TCe	05/09→	184	250	ATE	(DZ1N) Ø Disc 296×26 FN3/57	[-]	**PF0672**	155,2×63,0×18		LG	+HB el.	[-]	**PF0382**	106,1×45,5×16	OK039/ OK080
Megane CC (EM0/1_)																
1.5 dCi	05/05→	63	86	BSC		[-]	**PF0380**	136,8×59,2×18,1	OK012/ OK038	LG		[-]	**PF0432**	87×53×16	OK039
1.5 dCi	03/06→	78	106	BSC		[-]	**PF0380**	136,8×59,2×18,1	OK012/ OK038	LG		[-]	**PF0432**	87×53×16	OK039
1.5 dCi	01/07→	76	103	BSC		[-]	**PF0380**	136,8×59,2×18,1	OK012/ OK038	LG		[-]	**PF0432**	87×53×16	OK039
1.6	09/03→	83	113	BSC		[-]	**PF0380**	136,8×59,2×18,1	OK012/ OK038	LG		[-]	**PF0432**	87×53×16	OK039
1.6	06/05→	77	105	BSC		[-]	**PF0380**	136,8×59,2×18,1	OK012/ OK038	LG		[-]	**PF0432**	87×53×16	OK039
1.6 16V	01/07→	82	112	BSC		[-]	**PF0380**	136,8×59,2×18,1	OK012/ OK038	LG		[-]	**PF0432**	87×53×16	OK039
1.9 dCi	09/03→	88	120	BSC		[-]	**PF0380**	136,8×59,2×18,1	OK012/ OK038	LG		[-]	**PF0432**	87×53×16	OK039
1.9 dCi	05/05→	96	131	BSC		[-]	**PF0380**	136,8×59,2×18,1	OK012/ OK038	LG		[-]	**PF0432**	87×53×16	OK039
1.9 dCi	05/05→	81	110	BSC		[-]	**PF0380**	136,8×59,2×18,1	OK012/ OK038	LG		[-]	**PF0432**	87×53×16	OK039
1.9 dCi	09/03→	85	115	BSC		[-]	**PF0380**	136,8×59,2×18,1	OK012/ OK038	LG		[-]	**PF0432**	87×53×16	OK039
2.0	09/03→	99	135	BSC		[-]	**PF0380**	136,8×59,2×18,1	OK012/ OK038	LG		[-]	**PF0432**	87×53×16	OK039
2.0 16V Turbo	05/04→	120	163	BSC		[-]	**PF0380**	136,8×59,2×18,1	OK012/ OK038	LG		[-]	**PF0432**	87×53×16	OK039
2.0 dCi	09/05→	110	150	BSC		[-]	**PF0380**	136,8×59,2×18,1	OK012/ OK038	LG		[-]	**PF0432**	87×53×16	OK039

		KW	CV	SiS	i	W.i.	MAGNETI MARELLI	W×H×Th (mm)	Extra kit [Opt]	SiS	i	W.i.	MAGNETI MARELLI	W×H×Th (mm)	Extra kit [Opt]
RENAULT															
Megane CC III (EZ0/1_)															
1.4 TCe	06/10→	96	131	ATE	(EZ0F, EZ1V)	[-]	**PF0429**	155,3×64,5×17,9		LG	+HB el.	[-]	**PF0382**	106,1×45,5×16	OK039/ OK080
1.4 Tce	06/10→	96	131	ATE	(EZ0F, EZ1V) Ø Disc 296×26 FN3/57	[-]	**PF0672**	155,2×63,0×18		LG	+HB el.	[-]	**PF0382**	106,1×45,5×16	OK039/ OK080
1.5 dCi	06/10→	81	110	ATE	(EZ09, EZ0D, EZ1G)	[-]	**PF0429**	155,3×64,5×17,9		LG	+HB el.	[-]	**PF0382**	106,1×45,5×16	OK039/ OK080
1.5 dCi	06/10→	81	110	ATE	(EZ09, EZ0D, EZ1G) Ø Disc 296×26 FN3/57	[-]	**PF0672**	155,2×63,0×18		LG	+HB el.	[-]	**PF0382**	106,1×45,5×16	OK039/ OK080
1.6 16V	06/10→	81	110	ATE		[-]	**PF0429**	155,3×64,5×17,9		LG	+HB el.	[-]	**PF0382**	106,1×45,5×16	OK039/ OK080
1.6 16V	06/10→	81	110	ATE	Ø Disc 296×26 FN3/57	[-]	**PF0672**	155,2×63,0×18		LG	+HB el.	[-]	**PF0382**	106,1×45,5×16	OK039/ OK080
1.6 dCi	04/11→	96	130	ATE	(EZ09, EZ0D, EZ1G)	[-]	**PF0429**	155,3×64,5×17,9		LG	+HB el.	[-]	**PF0382**	106,1×45,5×16	OK039/ OK080
1.6 dCi	04/11→	96	130	ATE	(EZ09, EZ0D, EZ1G) Ø Disc 296×26 FN3/57	[-]	**PF0672**	155,2×63,0×18		LG	+HB el.	[-]	**PF0382**	106,1×45,5×16	OK039/ OK080
1.9 dCi	06/10→	96	131	ATE	(EZ0J, EZ1S)	[-]	**PF0429**	155,3×64,5×17,9		LG	+HB el.	[-]	**PF0382**	106,1×45,5×16	OK039/ OK080
1.9 dCi	06/10→	96	131	ATE	(EZ0J, EZ1S) Ø Disc 296×26 FN3/57	[-]	**PF0672**	155,2×63,0×18		LG	+HB el.	[-]	**PF0382**	106,1×45,5×16	OK039/ OK080
2.0 CVT	06/10→	103	140	ATE		[-]	**PF0429**	155,3×64,5×17,9		LG	+HB el.	[-]	**PF0382**	106,1×45,5×16	OK039/ OK080
2.0 CVT	06/10→	103	140	ATE	Ø Disc 296×26 FN3/57	[-]	**PF0672**	155,2×63,0×18		LG	+HB el.	[-]	**PF0382**	106,1×45,5×16	OK039/ OK080
2.0 dCi	06/10→	118	160	ATE	(EZ0L)	[-]	**PF0429**	155,3×64,5×17,9		LG	+HB el.	[-]	**PF0382**	106,1×45,5×16	OK039/ OK080

		KW	CV													
				SiS	i	W.i.	MAGNETI MARELLI	W×H×Th (mm)	Extra kit [Opt]	SiS	i	W.i.	MAGNETI MARELLI	W×H×Th (mm)	Extra kit [Opt]
RENAULT																
Megane CC III (EZ0/1_)																
2.0 dCi	06/10 →	118	160	ATE	(EZ0L) Ø Disc 296×26 FN3/57	[-]	**PF0672**	155,2×63,0×18		LG	+HB el.	[-]	**PF0382**	106,1×45,5×16	OK039/ OK080
2.0 TCe	06/10 →	132	180	ATE	(EZ1T)	[-]	**PF0429**	155,3×64,5×17,9		LG	+HB el.	[-]	**PF0382**	106,1×45,5×16	OK039/ OK080
2.0 TCe	06/10 →	132	180	ATE	(EZ1T) Ø Disc 296×26 FN3/57	[-]	**PF0672**	155,2×63,0×18		LG	+HB el.	[-]	**PF0382**	106,1×45,5×16	OK039/ OK080
Modus (F/JP0_)																
1.2	04/11 →	76	103	LG		[-]	**PF0347**	116,5×52,4×17	OK030/ OK058						
1.2	05/05 →	48	65	LG		[-]	**PF0347**	116,5×52,4×17	OK030/ OK058						
1.2	12/04 →	58	78	LG		[-]	**PF0347**	116,5×52,4×17	OK030/ OK058						
1.2	12/04 →	55	75	LG	(FP0C, FP0K, JP0C, JP0K)	[-]	**PF0347**	116,5×52,4×17	OK030/ OK058						
1.2 16V	05/07 →	74	101	LG		[-]	**PF0347**	116,5×52,4×17	OK030/ OK058						
1.2 16V Hi-Flex	10/08 →	55	75	LG		[-]	**PF0347**	116,5×52,4×17	OK030/ OK058						
1.4	12/04 →	72	98	LG	(JP01, JP0J)	[-]	**PF0347**	116,5×52,4×17	OK030/ OK058						
1.5 dCi	09/05 →	60	82	LG	(FP0D, JP0D)	[-]	**PF0347**	116,5×52,4×17	OK030/ OK058						
1.5 dCi	12/04 →	48	65	LG	(FP0E, JP0E)	[-]	**PF0347**	116,5×52,4×17	OK030/ OK058						
1.5 dCi	12/04 →	63	86	LG	(FP0F, JP0F)	[-]	**PF0347**	116,5×52,4×17	OK030/ OK058						
1.5 dCi	12/04 →	50	68	LG	(FP0G, JP0G)	[-]	**PF0347**	116,5×52,4×17	OK030/ OK058						
1.5 dCi	05/07 →	76	103	LG	(JP02)	[-]	**PF0347**	116,5×52,4×17	OK030/ OK058						
1.5 dCi	05/05 →	78	106	LG	(JP0G, JP0H)	[-]	**PF0347**	116,5×52,4×17	OK030/ OK058						
1.5 dCi 75	10/10 →	55	75	LG		[-]	**PF0347**	116,5×52,4×17	OK030/ OK058						
1.5 dCi 90	10/10 →	65	88	LG		[-]	**PF0347**	116,5×52,4×17	OK030/ OK058						

		KW	CV	SiS	i	W.i.	MAGNETI MARELLI	W×H×Th (mm)	Extra kit [Opt]	SiS	i	W.i.	MAGNETI MARELLI	W×H×Th (mm)	Extra kit [Opt]
RENAULT															
Modus (F/JP0_)															
1.6	12/04 →	65	88	LG		[-]	**PF0347**	116,5×52,4×17	OK030/ OK058						
1.6	12/04 →	82	112	LG	(JP0B)	[-]	**PF0347**	116,5×52,4×17	OK030/ OK058						
R9 (L42)															
1.1 - 1.2	81 → 89			BD		[+]	**PF0372**	105×54,3×18							
1.4 TL - TLE - GTL - TS - TSE - GTS	81 → 89			BD		[+]	**PF0372**	105×54,3×18							
1.4 Turbo	84 → 89			BD		[+]	**PF0372**	105×54,3×18		BD		[+]	**PF0197**	105×56×11	
1.4 Turbo	84 → 89									BD		[+]	**PF0197**	105×56×11	
1.6 D TD - TDE - GTD	83 → 89			BD		[+]	**PF0372**	105×54,3×18							
1.7 GTE	84 → 89			BD		[+]	**PF0372**	105×54,3×18		BD		[+]	**PF0197**	105×56×11	
1.7 GTE	84 → 89									BD		[+]	**PF0197**	105×56×11	
1.7 TX - TXE - GTX	84 → 89			BD		[+]	**PF0372**	105×54,3×18							
R11															
1.1 - 1.2	83 → 89			BD		[+]	**PF0372**	105×54,3×18							
1.4 TL - GTL - TR - TSE	83 → 89			BD		[+]	**PF0372**	105×54,3×18							
1.4 Turbo	84 → 89			BD		[+]	**PF0372**	105×54,3×18		BD		[+]	**PF0197**	105×56×11	
1.4 Turbo	84 → 89									BD		[+]	**PF0197**	105×56×11	
1.6 D TD - TDE - GTD	83 → 89			BD		[+]	**PF0372**	105×54,3×18							
1.7 GTE	87 → 89			BD		[+]	**PF0372**	105×54,3×18		BD		[+]	**PF0197**	105×56×11	
1.7 GTE	87 → 89									BD		[+]	**PF0197**	105×56×11	
1.7 TX - TXE - GTX	83 → 89			BD		[+]	**PF0372**	105×54,3×18							
R18 Berlina / SW (134_)															
1.6	04/82 → 07/86	54	73	BD	(1341)	[+]	**PF0372**	105×54,3×18							
1.6 TS	05/82 → 07/86	71	97	BD	(1342)	[+]	**PF0372**	105×54,3×18							
1.6 Turbo	10/80 → 09/82	80	109	BD	(1345)	[+]	**PF0372**	105×54,3×18							
1.6 Turbo	10/82 → 07/86	92	125	BD	(1345)	[+]	**PF0372**	105×54,3×18							
1.6 Turbo Inj.	09/82 → 07/86	82	112	BD		[+]	**PF0372**	105×54,3×18							
2.0	05/82 → 07/86	77	105	BD	(1343)	[+]	**PF0372**	105×54,3×18							
2.1 Diesel	11/81 → 07/86	49	67	BD	(1344)	[+]	**PF0372**	105×54,3×18							
2.1 TD	11/81 → 07/86	65	88	BD		[+]	**PF0372**	105×54,3×18							
2.2 i	06/84 → 07/86	76	103	BD		[+]	**PF0372**	105×54,3×18							
R19															
1.4	88 → 92			BD		[+]	**PF0372**	105×54,3×18							
1.7	88 → 92			BD	+ABS	[+]	**PF0372**	105×54,3×18							
1.7	88 → 92			BD		[+]	**PF0372**	105×54,3×18							
1.9 D	88 → 92			BD	+ABS	[+]	**PF0372**	105×54,3×18							

		KW	CV	SiS	i	W.i.	MAGNETI MARELLI	W×H×Th (mm)	Extra kit [Opt]	SiS	i	W.i.	MAGNETI MARELLI	W×H×Th (mm)	Extra kit [Opt]
RENAULT															
R19															
1.9 D	88 → 92			BD		[+]	**PF0372**	105×54,3×18							
R19 Chamade / Cabrio															
1.8	90 → 92			BD	+ABS	[+]	**PF0372**	105×54,3×18							
1.8	90 → 92			BD		[+]	**PF0372**	105×54,3×18							
1.8i 16V	90 → 92			BD		[+]	**PF0372**	105×54,3×18							
R19 Van (S53_)															
1.2	01/88 → 12/92	40	54	BD		[+]	**PF0372**	105×54,3×18							
1.4	01/88 → 12/92	59	80	BD		[+]	**PF0372**	105×54,3×18							
1.9 D	01/88 → 12/92	48	65	BD		[+]	**PF0372**	105×54,3×18							
R20 (127)															
1.6	80 → 84			BD		[+]	**PF0372**	105×54,3×18							
2.0	81 → 84			BD		[+]	**PF0372**	105×54,3×18							
2.1 D	80 → 84			BD		[+]	**PF0372**	105×54,3×18							
2.2 TX	81 → 84			BD		[+]	**PF0372**	105×54,3×18							
R21															
1.4 GTL	88 → 92			BD		[+]	**PF0372**	105×54,3×18							
1.6	06/88 → 12/93			LG	(B/L48.)	[+]	**PF0203**	99,9×64,8×18	OK030						
1.7	86 → 92			BD		[+]	**PF0372**	105×54,3×18							
1.7i	92 → 94			LG		[+]	**PF0203**	99,9×64,8×18	OK030						
1.7i	92 → 94			BD		[+]	**PF0372**	105×54,3×18							
1.9 D.	03/86 →			LG	(B/L48.)	[+]	**PF0203**	99,9×64,8×18	OK030						
2.0	03/86 → 12/95		98	LG	(B/L48J)	[+]	**PF0203**	99,9×64,8×18	OK030						
R21 Nevada															
1.7	03/86 → 12/95			LG	(K48J)	[+]	**PF0203**	99,9×64,8×18	OK030						
1.9 D	03/86 → 12/95			LG	(K48J)	[+]	**PF0203**	99,9×64,8×18	OK030						
2.0	03/86 → 12/95		98	LG	(K48J)	[+]	**PF0203**	99,9×64,8×18	OK030						
Rapid Van															
1.1	85 → 92			BD		[+]	**PF0378**	105×55×15							
1.2 - 1.4 - 1.6 D	85 → 92			BD		[+]	**PF0372**	105×54,3×18							
1.2 - 1.4 - 1.6 D - 1.9 D	92 →			BD		[+]	**PF0372**	105×54,3×18							
1.2 - 1.4 - 1.6 D - 1.9 D	92 →			LG		[+]	**PF0203**	99,9×64,8×18	OK030						
Scenic I (JA0/1_)															
1.4 16V	09/99 → 08/03	70	95	LG		[+]	**PF0817**	130×55,6×18	OK032						
1.4 i	01/97 → 09/99	55	75		(JA0E)					LG		[-]	**PF0144**	87×53×15	OK039
1.4i	05/99 → 03/01			LG	(JA) +ABS	[-]	**PF0377**	129×55,6×18	OK032						
1.4i	10/96 → 10/99			LG	(JA) -ABS	[+]	**PF0203**	99,9×64,8×18	OK030						
1.6 16V	09/99 → 08/03	79	107	LG	(JA0B, JA04, JA11)	[+]	**PF0817**	130×55,6×18	OK032						
1.6 i	01/97 → 09/99	55	75		(JA0L)					LG		[-]	**PF0144**	87×53×15	OK039
1.6i 16V	05/99 → 03			LG	(JA) +ABS	[-]	**PF0377**	129×55,6×18	OK032						
1.6 i	09/99 →	55	75	LG	(JA0L) -ABS	[+]	**PF0203**	99,9×64,8×18	OK030						

		KW	CV													
				SiS	i	W.i.	MAGNETI MARELLI	W×H×Th (mm)	Extra kit [Opt]	SiS	i	W.i.	MAGNETI MARELLI	W×H×Th (mm)	Extra kit [Opt]
RENAULT															
Scenic I (JA0/1_)															
1.8 16V	01/01 → 08/03	85	115	LG		[-]	**PF0377**	129×55,6×18	OK032						
1.9 D	03/97 → 09/99	47	64	LG	(JA0J) +ABS	[-]	**PF0377**	129×55,6×18	OK032						
1.9 D	09/99 → 03/01	47	64	LG	+ABS	[-]	**PF0377**	129×55,6×18	OK032						
1.9 dCi	09/99 → 08/03	75	102	LG	(JA05, JA1F)	[+]	**PF0817**	130×55,6×18	OK032						
1.9 dci	→ 04/99									LG		[-]	**PF0144**	87×53×15	OK039
1.9 dTi	04/97 → 09/99	72	98	LG	(JA0N)	[+]	**PF0817**	130×55,6×18	OK032						
1.9 dTi	04/97 → 09/99	72	98		(JA0N)					LG		[-]	**PF0144**	87×53×15	OK039
2.0 i	01/97 → 09/99	84	114		(JA0G)					LG		[-]	**PF0144**	87×53×15	OK039
2.0i 16V	05/99 → 03			LG	(JA) +ABS	[-]	**PF0377**	129×55,6×18	OK032	LG		[-]	**PF0144**	87×53×15	OK039
Scenic RX4 (JA0)															
1.9 dci	→ 04/99									LG		[-]	**PF0144**	87×53×15	OK039
1.9 dci	05/99 → 03			LG	(O5)	[-]	**PF0377**	129×55,6×18	OK032	LG		[-]	**PF0144**	87×53×15	OK039
1.9 dci 2WD	05/99 → 03			LG	(O5)	[-]	**PF0377**	129×55,6×18	OK032	LG		[-]	**PF0144**	87×53×15	OK039
2.0i 16V	→ 04/99									LG		[-]	**PF0144**	87×53×15	OK039
2.0i 16V	05/99 → 03			LG	(OC)	[-]	**PF0377**	129×55,6×18	OK032	LG		[-]	**PF0144**	87×53×15	OK039
2.0i 16V 2WD	05/99 → 03			LG	(OC)	[-]	**PF0377**	129×55,6×18	OK032	LG		[-]	**PF0144**	87×53×15	OK039
Scenic II (JM0/1_)															
1.4	06/03 →	72	98	BSC	(JM0B, JM0H, JM1A)	[-]	**PF0380**	136,8×59,2×18,1	OK012/ OK038	LG		[-]	**PF0144**	87×53×15	OK039
1.5 dCi	11/03 →	74	101	BSC	(JM02, JM13)	[-]	**PF0380**	136,8×59,2×18,1	OK012/ OK038	LG		[-]	**PF0432**	87×53×16	OK039
1.5 dCi	06/03 →	60	82	BSC	(JM0F)	[-]	**PF0380**	136,8×59,2×18,1	OK012/ OK038	LG		[-]	**PF0144**	87×53×15	OK039
1.5 dCi	01/07 →	76	103	BSC	(JM16)	[-]	**PF0380**	136,8×59,2×18,1	OK012/ OK038	LG		[-]	**PF0144**	87×53×15	OK039
1.5 dCi	05/05 →	78	106	BSC	(JM1E)	[-]	**PF0380**	136,8×59,2×18,1	OK012/ OK038	LG		[-]	**PF0144**	87×53×15	OK039
1.5 dCi	05/05 →	63	86	BSC	(JM1F)	[-]	**PF0380**	136,8×59,2×18,1	OK012/ OK038	LG		[-]	**PF0144**	87×53×15	OK039
1.6	06/06 →	77	105	BSC		[-]	**PF0380**	136,8×59,2×18,1	OK012/ OK038	LG		[-]	**PF0144**	87×53×15	OK039
1.6 Hi-Flex	03/05 → 07/11	81	110	BSC		[-]	**PF0380**	136,8×59,2×18,1	OK012/ OK038	LG		[-]	**PF0144**	87×53×15	OK039
1.6	06/03 →	83	113	BSC	(JM0C, JM0J, JM1B)	[-]	**PF0380**	136,8×59,2×18,1	OK012/ OK038	LG		[-]	**PF0144**	87×53×15	OK039
1.6 16V	01/07 →	82	112	BSC		[-]	**PF0380**	136,8×59,2×18,1	OK012/ OK038	LG		[-]	**PF0144**	87×53×15	OK039
1.9 D	06/06 →	85	116	BSC		[-]	**PF0380**	136,8×59,2×18,1	OK012/ OK038	LG		[-]	**PF0144**	87×53×15	OK039
1.9 dCi	06/03 →	92	125	BSC		[-]	**PF0380**	136,8×59,2×18,1	OK012/ OK038	LG		[-]	**PF0144**	87×53×15	OK039

		KW	CV	SiS	i	W.i.	MAGNETI MARELLI	W×H×Th (mm)	Extra kit [Opt]	SiS	i	W.i.	MAGNETI MARELLI	W×H×Th (mm)	Extra kit [Opt]
RENAULT															
Scenic II (JM0/1_)															
1.9 dCi	06/03 →	88	120	BSC	(JM12, JM0G)	[-]	**PF0380**	136,8×59,2×18,1	OK012/ OK038	LG		[-]	**PF0144**	87×53×15	OK039
1.9 dCi	05/05 →	96	131	ATE	(JM14)	[-]	**PF0572**	155,2×68,5×18,2	OK087	LG		[-]	**PF0144**	87×53×15	OK039
1.9 dCi	05/05 →	81	110	BSC	(JM15)	[-]	**PF0380**	136,8×59,2×18,1	OK012/ OK038	LG		[-]	**PF0144**	87×53×15	OK039
2.0	06/03 →	99	135	BSC	(JM05, JM1N)	[-]	**PF0380**	136,8×59,2×18,1	OK012/ OK038	LG		[-]	**PF0144**	87×53×15	OK039
2.0 16V Turbo	05/04 →	120	163	ATE	(JM0W)	[-]	**PF0572**	155,2×68,5×18,2	OK087	LG		[-]	**PF0144**	87×53×15	OK039
2.0 dCi	09/05 →	110	150	BSC	(JM1K)	[-]	**PF0380**	136,8×59,2×18,1	OK012/ OK038	LG		[-]	**PF0144**	87×53×15	OK039
Scenic III (JZ0/1_)															
1.4 16V	02/09 →	96	131	ATE	15"	[-]	**PF0429**	155,3×64,5×17,9		LG		[-]	**PF0144**	87×53×15	OK039
1.4 16V	02/09 →	96	131	ATE	16"/17"	[-]	**PF0670**	155,2×63,0×18		LG	+HB el.	[-]	**PF0382**	106,1×45,5×16	OK039
1.5 dCi	04/09 →	81	110	ATE	15"	[-]	**PF0429**	155,3×64,5×17,9		LG		[-]	**PF0144**	87×53×15	OK039
1.5 dCi	04/09 →	81	110	ATE	16"/17"	[-]	**PF0670**	155,2×63,0×18		LG	+HB el.	[-]	**PF0382**	106,1×45,5×16	OK039
1.5 dCi	04/09 →	63	86	ATE	15"	[-]	**PF0429**	155,3×64,5×17,9		LG		[-]	**PF0144**	87×53×15	OK039
1.5 dCi	04/09 →	63	86	ATE	16"/17"	[-]	**PF0670**	155,2×63,0×18		LG	+HB el.	[-]	**PF0382**	106,1×45,5×16	OK039
1.5 dCi	11/10 →	70	95	ATE	15"	[-]	**PF0429**	155,3×64,5×17,9		LG		[-]	**PF0144**	87×53×15	OK039
1.5 dCi	11/10 →	70	95	ATE	16"/17"	[-]	**PF0670**	155,2×63,0×18		LG	+HB el.	[-]	**PF0382**	106,1×45,5×16	OK039
1.5 dCi	02/09 →	78	106	ATE	15"	[-]	**PF0429**	155,3×64,5×17,9		LG		[-]	**PF0144**	87×53×15	OK039
1.5 dCi	02/09 →	78	106	ATE	16"/17"	[-]	**PF0670**	155,2×63,0×18		LG	+HB el.	[-]	**PF0382**	106,1×45,5×16	OK039
1.6 16V	02/09 →	81	110	ATE	15"	[-]	**PF0429**	155,3×64,5×17,9		LG		[-]	**PF0144**	87×53×15	OK039
1.6 16V	02/09 →	81	110	ATE	16"/17"	[-]	**PF0670**	155,2×63,0×18		LG	+HB el.	[-]	**PF0382**	106,1×45,5×16	OK039
1.6 dCi	04/11 →	96	130	ATE	15"	[-]	**PF0429**	155,3×64,5×17,9		LG		[-]	**PF0144**	87×53×15	OK039
1.6 dCi	04/11 →	96	130	ATE	16"/17"	[-]	**PF0670**	155,2×63,0×18		LG	+HB el.	[-]	**PF0382**	106,1×45,5×16	OK039
1.6 E85	02/09 →	81	110	ATE	15"	[-]	**PF0429**	155,3×64,5×17,9		LG		[-]	**PF0144**	87×53×15	OK039
1.6 E85	02/09 →	81	110	ATE	16"/17"	[-]	**PF0670**	155,2×63,0×18		LG	+HB el.	[-]	**PF0382**	106,1×45,5×16	OK039
1.9 dCi	02/09 →	96	131	ATE	15"	[-]	**PF0429**	155,3×64,5×17,9		LG		[-]	**PF0144**	87×53×15	OK039
1.9 dCi	02/09 →	96	131	ATE	16"/17"	[-]	**PF0670**	155,2×63,0×18		LG	+HB el.	[-]	**PF0382**	106,1×45,5×16	OK039
2.0 16V	02/09 →	103	140	ATE	15"	[-]	**PF0429**	155,3×64,5×17,9		LG		[-]	**PF0144**	87×53×15	OK039
2.0 16V	02/09 →	103	140	ATE	16"/17"	[-]	**PF0670**	155,2×63,0×18		LG	+HB el.	[-]	**PF0382**	106,1×45,5×16	OK039
2.0 dCi	02/09 →	110	150	ATE	15"	[-]	**PF0429**	155,3×64,5×17,9		LG		[-]	**PF0144**	87×53×15	OK039
2.0 dCi	02/09 →	110	150	ATE	16"/17"	[-]	**PF0670**	155,2×63,0×18		LG	+HB el.	[-]	**PF0382**	106,1×45,5×16	OK039
2.0 dCi	04/09 →	118	160	ATE	15"	[-]	**PF0429**	155,3×64,5×17,9		LG		[-]	**PF0144**	87×53×15	OK039
2.0 dCi	04/09 →	118	160	ATE	16"/17"	[-]	**PF0670**	155,2×63,0×18		LG	+HB el.	[-]	**PF0382**	106,1×45,5×16	OK039
Safrane (B5)															
1.9	97 →			LG	+ABS	[+]	**PF0817**	130×55,6×18	OK032						
2.0i	92 →			LG		[+]	**PF0817**	130×55,6×18	OK032						
2.0i	92 →			LG		[+]	**PF0817**	130×55,6×18	OK032						
2.0 16V	97 →			LG	+ABS	[+]	**PF0817**	130×55,6×18	OK032						
2.0	03/99 → 04/00			LG	(B5)	[-]	**PF0377**	129×55,6×18	OK032						
2.1 8V	97 →			LG	+ABS	[+]	**PF0817**	130×55,6×18	OK032						
2.1 TD	92 →			LG		[+]	**PF0817**	130×55,6×18	OK032						
2.2	97 →			LG	+ABS	[+]	**PF0817**	130×55,6×18	OK032						

		KW	CV	SiS	i	W.i.	MAGNETI MARELLI	W×H×Th (mm)	Extra kit [Opt]	SiS	i	W.i.	MAGNETI MARELLI	W×H×Th (mm)	Extra kit [Opt]
RENAULT															
Safrane (B5)															
2.2i	92→			LG		[+]	**PF0817**	130×55,6×18	OK032						
2.2i TD 12V	96→			LG		[+]	**PF0817**	130×55,6×18	OK032						
2.2 TD	03/99→04/00			LG	(B5)	[-]	**PF0377**	129×55,6×18	OK032						
2.4	97→			LG	+ABS	[+]	**PF0817**	130×55,6×18	OK032						
2.5 TD	92→			LG		[+]	**PF0817**	130×55,6×18	OK032						
2.5 TD	92→			LG		[+]	**PF0817**	130×55,6×18	OK032						
2.5 20V	97→			LG	+ABS	[+]	**PF0817**	130×55,6×18	OK032						
2.5	03/99→04/00			LG	(B5) +ABS	[-]	**PF0377**	129×55,6×18	OK032						
2.9	03/99→04/00			LG	(B5) +ABS	[-]	**PF0377**	129×55,6×18	OK032						
3.0i V6 RXE	92→			LG	+ABS	[+]	**PF0817**	130×55,6×18	OK032						
3.0i V6 RXE	92→			LG		[+]	**PF0817**	130×55,6×18	OK032						
3.0i V6 Biturbo 4WD	92→			LG		[+]	**PF0817**	130×55,6×18	OK032						
3.0	03/99→04/00			LG	(B5) +ABS	[-]	**PF0377**	129×55,6×18	OK032						
3.0 12V	97→			LG	+ABS	[+]	**PF0817**	130×55,6×18	OK032						
Spider (EF0_)															
2.0 Sport	12/95→08/96	108	147	LG		[+]	**PF0817**	130×55,6×18	OK032						
2.0 16V Sport	03/95→10/99	110	150	LG		[+]	**PF0817**	130×55,6×18	OK032						
Super 5															
1.0 - 1.1	85→90			BD		[+]	**PF0378**	105×55×15							
1.1 Five - 1.4 Five - 1.6 Diesel	90→			BD		[+]	**PF0372**	105×54,3×18							
1.4 TR - GTL - GTR - TS - GTS - TSE	85→90			BD		[+]	**PF0372**	105×54,3×18							
1.4i Turbo GT	85→90			BD		[+]	**PF0372**	105×54,3×18		BD		[+]	**PF0197**	105×56×11	
1.4i Turbo GT	85→90									BD		[+]	**PF0197**	105×56×11	
1.4i Turbo GT	85→90									BD		[+]	**PF0197**	105×56×11	
1.6 Diesel SD - TD - GTD	86→90			BD		[+]	**PF0372**	105×54,3×18							
1.7 GT - GTE	87→90			BD		[+]	**PF0372**	105×54,3×18		BD		[+]	**PF0197**	105×56×11	
1.7 GT - GTE	87→90									BD		[+]	**PF0197**	105×56×11	
1.7 GT - GTE	87→90									BD		[+]	**PF0197**	105×56×11	
1.7 GTX - TX - TXE - Baccara	87→90			BD		[+]	**PF0372**	105×54,3×18							
Super 5 Van (S40)															
1.1	86→90			BD		[+]	**PF0378**	105×55×15							
1.4 - 1.6 D	86→90			BD		[+]	**PF0372**	105×54,3×18							
Symbol															
1.2 16V	98→		75	LG		[+]	**PF0203**	99,9×64,8×18	OK030						
1.4 8V	98→		75	LG		[+]	**PF0203**	99,9×64,8×18	OK030						
1.4	98→		98	LG		[+]	**PF0203**	99,9×64,8×18	OK030						
1.5 Dci	98→		65	LG		[+]	**PF0203**	99,9×64,8×18	OK030						

		KW	CV													
				SiS	i	W.i.	MAGNETI MARELLI	W×H×Th (mm)	Extra kit [Opt]	SiS	i	W.i.	MAGNETI MARELLI	W×H×Th (mm)	Extra kit [Opt]
RENAULT															
Symbol															
1.5 Dci	98 →		80	LG		[+]	**PF0203**	99,9×64,8×18	OK030						
Thalia I (LB0/1/2_)															
1.0 Flex	11/05 → 02/09	57	76	LG		[+]	**PF0203**	99,9×64,8×18	OK030						
1.2	02/98 → 10/03	43	58	LG		[+]	**PF0203**	99,9×64,8×18	OK030						
1.2 16V	04/02 →	55	75	LG		[+]	**PF0203**	99,9×64,8×18	OK030						
1.4	08/00 →	55	75	LG		[+]	**PF0203**	99,9×64,8×18	OK030						
1.4 16V	08/00 →	72	98	LG		[+]	**PF0203**	99,9×64,8×18	OK030						
1.5 dCi	04/02 →	48	65	LG		[+]	**PF0203**	99,9×64,8×18	OK030						
1.5 dCi	06/01 →	60	82	LG		[+]	**PF0203**	99,9×64,8×18	OK030						
1.5 dCi	02/03 →	50	68	LG		[+]	**PF0203**	99,9×64,8×18	OK030						
1.5 dCi	06/01 → 10/03	59	80	LG		[+]	**PF0203**	99,9×64,8×18	OK030						
1.5 dCi	06/05 →	47	64	LG		[+]	**PF0203**	99,9×64,8×18	OK030						
1.6	03/98 → 05/01	66	90	LG		[+]	**PF0203**	99,9×64,8×18	OK030						
1.6	03/98 → 05/01	66	90	LG		[+]	**PF0203**	99,9×64,8×18	OK030						
1.6 16V	04/02 →	79	107	LG		[+]	**PF0203**	99,9×64,8×18	OK030						
1.6 Flex	11/04 → 02/09	81	110	LG		[+]	**PF0203**	99,9×64,8×18	OK030						
Thalia II															
1.2 16V	09/08 →	55	75	LG		[+]	**PF0203**	99,9×64,8×18	OK030						
1.5 dCi	09/08 →	62	85	LG		[+]	**PF0203**	99,9×64,8×18	OK030						
1.5 dCi	09/08 →	47	64	LG		[+]	**PF0203**	99,9×64,8×18	OK030						
1.5 dCi	01/09 →	48	65	LG		[+]	**PF0203**	99,9×64,8×18	OK030						
1.6	01/09 →	66	90	LG		[+]	**PF0203**	99,9×64,8×18	OK030						
1.6 16V	09/08 →	77	105	LG		[+]	**PF0203**	99,9×64,8×18	OK030						
1.6 16V	01/09 →	79	107	LG		[+]	**PF0203**	99,9×64,8×18	OK030						
1.6 Flex	04/09 →	68	92	LG		[+]	**PF0203**	99,9×64,8×18	OK030						
1.6 Flex	03/09 →	81	110	LG		[+]	**PF0203**	99,9×64,8×18	OK030						
Trafic Bus II (JL)															
1.9 dCi	04/01 → 07/03	59	80	LG		[-]	**PF0371**	145,1×62,5×18,2	OK012	LG		[-]	**PF0370**	94,9×57,4×17	OK032
1.9 dCi 100	03/01 →	74	101	LG	(JL0C)	[-]	**PF0371**	145,1×62,5×18,2	OK012	LG		[-]	**PF0370**	94,9×57,4×17	OK032
1.9 dCi 80	03/01 →	60	82	LG	(JL0B)	[-]	**PF0371**	145,1×62,5×18,2	OK012	LG		[-]	**PF0370**	94,9×57,4×17	OK032
2.0	03/01 →	88	120	LG	(JL0A)	[-]	**PF0371**	145,1×62,5×18,2	OK012	LG		[-]	**PF0370**	94,9×57,4×17	OK032
2.0 16V	08/06 →	86	117	LG		[-]	**PF0371**	145,1×62,5×18,2	OK012	LG		[-]	**PF0370**	94,9×57,4×17	OK032
2.0 dCi 115	08/06 →	84	114	LG	(JL0H)	[-]	**PF0371**	145,1×62,5×18,2	OK012	LG		[-]	**PF0370**	94,9×57,4×17	OK032
2.0 dCi 90	08/06 →	66	90	LG	(JL0H)	[-]	**PF0371**	145,1×62,5×18,2	OK012	LG		[-]	**PF0370**	94,9×57,4×17	OK032
2.5 dCi 115	02/08 →	84	114	LG		[-]	**PF0371**	145,1×62,5×18,2	OK012	LG		[-]	**PF0370**	94,9×57,4×17	OK032
2.5 dCi 135	05/03 →	99	135	LG	(JL0D)	[-]	**PF0371**	145,1×62,5×18,2	OK012	LG		[-]	**PF0370**	94,9×57,4×17	OK032
2.5 dCi 145	08/06 →	107	146	LG	(JL0J)	[-]	**PF0371**	145,1×62,5×18,2	OK012	LG		[-]	**PF0370**	94,9×57,4×17	OK032
2.5 DTi	03/03 → 07/03	99	135	LG		[-]	**PF0371**	145,1×62,5×18,2	OK012	LG		[-]	**PF0370**	94,9×57,4×17	OK032
Trafic Van II (FL)															
1.9 dCi	04/01 → 07/03	59	80	LG		[-]	**PF0371**	145,1×62,5×18,2	OK012	LG		[-]	**PF0370**	94,9×57,4×17	OK032
1.9 dCi 100	03/01 →	74	101	LG	(FL0C)	[-]	**PF0371**	145,1×62,5×18,2	OK012	LG		[-]	**PF0370**	94,9×57,4×17	OK032
1.9 dCi 80	03/01 →	60	82	LG	(FL0B)	[-]	**PF0371**	145,1×62,5×18,2	OK012	LG		[-]	**PF0370**	94,9×57,4×17	OK032
2.0	03/01 →	88	120	LG	(FL0A)	[-]	**PF0371**	145,1×62,5×18,2	OK012	LG		[-]	**PF0370**	94,9×57,4×17	OK032
2.0 16V	08/06 →	86	117	LG		[-]	**PF0371**	145,1×62,5×18,2	OK012	LG		[-]	**PF0370**	94,9×57,4×17	OK032

		KW	CV	SiS	i	W.i.	MAGNETI MARELLI	W×H×Th (mm)	Extra kit [Opt]	SiS	i	W.i.	MAGNETI MARELLI	W×H×Th (mm)	Extra kit [Opt]
RENAULT															
Trafic Van II (FL)															
2.0 dCi 115	08/06→	84	114	LG	(FL0H)	[-]	**PF0371**	145,1×62,5×18,2	OK012	LG		[-]	**PF0370**	94,9×57,4×17	OK032
2.0 dCi 90	08/06→	66	90	LG	(FL0H)	[-]	**PF0371**	145,1×62,5×18,2	OK012	LG		[-]	**PF0370**	94,9×57,4×17	OK032
2.5 dCi 135	05/03→	99	135	LG	(FL0D)	[-]	**PF0371**	145,1×62,5×18,2	OK012	LG		[-]	**PF0370**	94,9×57,4×17	OK032
2.5 dCi 145	08/06→	107	146	LG	(FL0J)	[-]	**PF0371**	145,1×62,5×18,2	OK012	LG		[-]	**PF0370**	94,9×57,4×17	OK032
2.5 DTi	03/03→07/03	99	135	LG		[-]	**PF0371**	145,1×62,5×18,2	OK012	LG		[-]	**PF0370**	94,9×57,4×17	OK032
Trafic Pianale II (EL)															
1.9 dCi	09/01→07/03	59	80	LG		[-]	**PF0371**	145,1×62,5×18,2	OK012	LG		[-]	**PF0370**	94,9×57,4×17	OK032
1.9 dCi 100	03/01→	74	101	LG	(ELOC)	[-]	**PF0371**	145,1×62,5×18,2	OK012	LG		[-]	**PF0370**	94,9×57,4×17	OK032
1.9 dCi 80	03/01→	60	82	LG	(ELOB)	[-]	**PF0371**	145,1×62,5×18,2	OK012	LG		[-]	**PF0370**	94,9×57,4×17	OK032
2.0	03/01→	88	120	LG	(ELOA)	[-]	**PF0371**	145,1×62,5×18,2	OK012	LG		[-]	**PF0370**	94,9×57,4×17	OK032
2.0 dCi 115	08/06→	84	114	LG	(EL0H)	[-]	**PF0371**	145,1×62,5×18,2	OK012	LG		[-]	**PF0370**	94,9×57,4×17	OK032
2.0 dCi 90	08/06→	66	90	LG	(EL0H)	[-]	**PF0371**	145,1×62,5×18,2	OK012	LG		[-]	**PF0370**	94,9×57,4×17	OK032
2.5 dCi	08/07→	84	114	LG		[-]	**PF0371**	145,1×62,5×18,2	OK012	LG		[-]	**PF0370**	94,9×57,4×17	OK032
2.5 dCi 135	03/01→	99	135	LG	(ELOD)	[-]	**PF0371**	145,1×62,5×18,2	OK012	LG		[-]	**PF0370**	94,9×57,4×17	OK032
2.5 dCi 145	08/06→	107	146	LG	(EL0J)	[-]	**PF0371**	145,1×62,5×18,2	OK012	LG		[-]	**PF0370**	94,9×57,4×17	OK032
Twingo I (C06_)															
1.2	09/98→08/00	44	60	LG		[-]	**PF0204**	99,9×64,8×18	OK030						
1.2	03/93→09/98	40	55	LG	(C063, C064)	[-]	**PF0385**	105×55×15							
1.2	09/98→	40	55	LG	(C063, C064)	[-]	**PF0204**	99,9×64,8×18	OK030						
1.2	05/96→09/98	43	58	LG	(C066, C068)	[-]	**PF0385**	105×55×15							
1.2	09/98→	43	58	LG	(C066, C068)	[-]	**PF0204**	99,9×64,8×18	OK030						
1.2	05/96→	40	54	LG	(C067)	[-]	**PF0204**	99,9×64,8×18	OK030						
1.2 16V	08/04→	44	60	LG	(C060)	[-]	**PF0204**	99,9×64,8×18	OK030						
Twingo Furgonato (S06)															
1.2	03/93→09/98	40	55	BD	(S063, S064)	[-]	**PF0385**	105×55×15							
1.2	03/93→09/98	40	55	BD	(S063, S064)	[+]	**PF0378**	105×55×15							
Twingo II (C06_)															
1.2 16V	01/01→	55	75	LG	(C06C)	[+]	**PF0203**	99,9×64,8×18	OK030						
1.2 16V	01/01→	55	75	LG	(C06D)	[+]	**PF0203**	99,9×64,8×18	OK030						
1.2 16V	01/01→	55	75	LG	(C06K)	[+]	**PF0203**	99,9×64,8×18	OK030						
Twingo III (CN0_)															
1.2	03/07→	43	58	LG	(CN0D)	[-]	**PF0204**	99,9×64,8×18	OK030						
1.2 16V	03/07→	55	75	LG		[-]	**PF0204**	99,9×64,8×18	OK030						
1.2 16V	03/07→	56	76	LG	(CN0A)	[-]	**PF0204**	99,9×64,8×18	OK030						
1.2 TCe 100	02/11→	75	102	LG		[-]	**PF0204**	99,9×64,8×18	OK030						
1.2 Turbo	03/07→	74	100	LG	(CN0C)	[-]	**PF0204**	99,9×64,8×18	OK030						
1.5 dCi	03/07→	47	64	LG	(CN0E)	[-]	**PF0204**	99,9×64,8×18	OK030						
1.5 dCi	04/08→	62	84	LG	(CN0U)	[-]	**PF0204**	99,9×64,8×18	OK030						

		KW	CV	SiS	i	W.i.	MAGNETI MARELLI	W×H×Th (mm)	Extra kit [Opt]	SiS	i	W.i.	MAGNETI MARELLI	W×H×Th (mm)	Extra kit [Opt]
RENAULT															
Twingo III (CN0_)															
1.5 dCi 75	10/10 →	55	75	LG		[-]	**PF0204**	99,9×64,8×18	OK030						
1.5 dCi 90	10/10 →	63	86	LG		[-]	**PF0204**	99,9×64,8×18	OK030						
1.6 RS	05/08 →	98	133	LG	(CN0R)	[-]	**PF0204**	99,9×64,8×18	OK030						
Vel Satis (BJ0_)															
2.0 16V Turbo	04/04 →	125	170	ATE		[-]	**PF0571**	155,2×68,5×18,2	OK087	ATE		[-]	**PF0349**	123,1×52×16,4	
2.0 16V Turbo	06/02 →	120	163	ATE	(BJ0K)	[-]	**PF0571**	155,2×68,5×18,2	OK087	ATE		[-]	**PF0349**	123,1×52×16,4	
2.0 dCi	08/05 →	110	150	ATE	(BJ03)	[-]	**PF0571**	155,2×68,5×18,2	OK087	ATE		[-]	**PF0349**	123,1×52×16,4	
2.0 dCi	01/06 →	127	173	ATE	(BJ03)	[-]	**PF0571**	155,2×68,5×18,2	OK087	ATE		[-]	**PF0349**	123,1×52×16,4	
2.0 Turbo	04/05 →	108	147	ATE		[-]	**PF0571**	155,2×68,5×18,2	OK087	ATE		[-]	**PF0349**	123,1×52×16,4	
2.2 dCi	12/04 →	83	113	ATE		[-]	**PF0571**	155,2×68,5×18,2	OK087	ATE		[-]	**PF0349**	123,1×52×16,4	
2.2 dCi	06/02 →	110	150	ATE	(BJ0E, BJ0F)	[-]	**PF0571**	155,2×68,5×18,2	OK087	ATE		[-]	**PF0349**	123,1×52×16,4	
2.2 dCi	09/04 →	102	140	ATE	(BJ0G, BJ0H)	[-]	**PF0571**	155,2×68,5×18,2	OK087	ATE		[-]	**PF0349**	123,1×52×16,4	
2.2 dCi	04/04 →	85	116	ATE	(BJOH)	[-]	**PF0571**	155,2×68,5×18,2	OK087	ATE		[-]	**PF0349**	123,1×52×16,4	
3.0 dCi	06/02 →	130	177	ATE	(BJ0N)	[-]	**PF0571**	155,2×68,5×18,2	OK087	ATE		[-]	**PF0349**	123,1×52×16,4	
3.0 dCi	06/06 →	133	181	ATE	(BJ0S)	[-]	**PF0571**	155,2×68,5×18,2	OK087	ATE		[-]	**PF0349**	123,1×52×16,4	
3.5	10/04 →	170	231	ATE		[-]	**PF0571**	155,2×68,5×18,2	OK087	ATE		[-]	**PF0349**	123,1×52×16,4	
3.5 V6	06/02 →	177	241	ATE	(BJ0V, BJ0U)	[-]	**PF0571**	155,2×68,5×18,2	OK087	ATE		[-]	**PF0349**	123,1×52×16,4	
Zoe															
ZOE	06/12 →	65	88	LG		[-]	**PF0347**	116,5×52,4×17	OK030						
Wind (E4M)															
1.2	07/10 → 13	74	101	ATE	15"	[-]	**PF0381**	155,2×66,5×18,0							
1.2 TCe 100	02/11 → 13	75	102	ATE	15"	[-]	**PF0381**	155,2×66,5×18,0							
1.6	07/10 → 13	98	133	ATE	15"	[-]	**PF0381**	155,2×66,5×18,0							
ROVER															
25 (RF)															
1.1	09/99 → 06/01	55	75	LG		[+]	**PF0484**	129,2×69,7×18	OK037	AK		[+]	**PF0457**	88,9×35,2×13	
1.1	07/01 → 05/04	44	60	LG		[+]	**PF0484**	129,2×69,7×18	OK037	AK		[+]	**PF0457**	88,9×35,2×13	
1.1 16V	01/04 →	55	75	LG		[+]	**PF0484**	129,2×69,7×18	OK037	AK		[+]	**PF0457**	88,9×35,2×13	
1.4 16V	10/99 →	62	84	LG		[+]	**PF0484**	129,2×69,7×18	OK037	AK		[+]	**PF0457**	88,9×35,2×13	
1.4 16V	10/99 →	76	103	LG		[+]	**PF0484**	129,2×69,7×18	OK037	AK		[+]	**PF0457**	88,9×35,2×13	
1.6 16V	10/99 →	80	109	LG		[+]	**PF0484**	129,2×69,7×18	OK037	AK		[+]	**PF0457**	88,9×35,2×13	
1.8 16V	10/99 →	85	116	LG		[+]	**PF0484**	129,2×69,7×18	OK037	AK		[+]	**PF0457**	88,9×35,2×13	
1.8 16V	02/00 →	107	146	LG		[+]	**PF0484**	129,2×69,7×18	OK037	AK		[+]	**PF0457**	88,9×35,2×13	
2.0 iDT	01/02 → 06/04	83	113	LG		[+]	**PF0484**	129,2×69,7×18	OK037	AK		[+]	**PF0457**	88,9×35,2×13	
2.0 iDT	10/99 →	74	101	LG		[+]	**PF0484**	129,2×69,7×18	OK037	AK		[+]	**PF0457**	88,9×35,2×13	
45 (RT)															
1.4	02/00 →	76	103	LG		[+]	**PF0484**	129,2×69,7×18	OK037	AK		[+]	**PF0457**	88,9×35,2×13	
1.6	02/00 →	80	109	LG		[+]	**PF0484**	129,2×69,7×18	OK037	AK		[+]	**PF0457**	88,9×35,2×13	
1.8	02/00 →	86	117	LG		[+]	**PF0484**	129,2×69,7×18	OK037	AK		[+]	**PF0457**	88,9×35,2×13	
2.0 iDT	01/04 →	83	113	LG		[+]	**PF0484**	129,2×69,7×18	OK037	AK		[+]	**PF0457**	88,9×35,2×13	

		KW	CV	SiS	i	W.i.	MAGNETI MARELLI	W×H×Th (mm)	Extra kit [Opt]	SiS	i	W.i.	MAGNETI MARELLI	W×H×Th (mm)	Extra kit [Opt]
ROVER															
45 (RT)															
2.0 iDT	02/00 → 05/05	74	101	LG		[+]	**PF0484**	129,2×69,7×18	OK037	AK		[+]	**PF0457**	88,9×35,2×13	
2.0 V6	02/00 →	110	150	LG		[+]	**PF0484**	129,2×69,7×18	OK037	AK		[+]	**PF0457**	88,9×35,2×13	
45 3 Volumi/Berlina (RT)															
1.4	02/00 →	76	103	LG		[+]	**PF0484**	129,2×69,7×18	OK037	AK		[+]	**PF0457**	88,9×35,2×13	
1.6	02/00 →	80	109	LG		[+]	**PF0484**	129,2×69,7×18	OK037	AK		[+]	**PF0457**	88,9×35,2×13	
1.8	02/00 →	86	117	LG		[+]	**PF0484**	129,2×69,7×18	OK037	AK		[+]	**PF0457**	88,9×35,2×13	
2.0 iDT	01/04 →	83	113	LG		[+]	**PF0484**	129,2×69,7×18	OK037	AK		[+]	**PF0457**	88,9×35,2×13	
2.0 iDT	02/00 →	74	101	LG		[+]	**PF0484**	129,2×69,7×18	OK037	AK		[+]	**PF0457**	88,9×35,2×13	
2.0 V6	02/00 →	110	150	LG		[+]	**PF0484**	129,2×69,7×18	OK037	AK		[+]	**PF0457**	88,9×35,2×13	
75 Berlina (RJ)															
1.8	02/99 →	88	120							ATE		[o]	**PF0157**	123,1×43,7×17,3	OK022
1.8 Turbo	05/03 →	110	150							ATE		[o]	**PF0157**	123,1×43,7×17,3	OK022
2.0 CDT	02/99 →	85	115							ATE		[o]	**PF0157**	123,1×43,7×17,3	OK022
2.0 CDTi	02/03 →	96	131							ATE		[o]	**PF0157**	123,1×43,7×17,3	OK022
2.0 V6	02/99 →	110	150							ATE		[o]	**PF0157**	123,1×43,7×17,3	OK022
2.5 V6	02/99 → 10/01	129	175							ATE		[o]	**PF0157**	123,1×43,7×17,3	OK022
2.5 V6	10/01 →	130	177							ATE		[o]	**PF0157**	123,1×43,7×17,3	OK022
4.6 V8	10/04 →	191	260	ATE		[o]	**PF0153**	156,3×63,3×20		ATE		[o]	**PF0157**	123,1×43,7×17,3	OK022
75 Tourer (RJ)															
1.8	08/01 →	88	120							ATE		[o]	**PF0157**	123,1×43,7×17,3	OK022
1.8 Turbo	05/03 →	110	150							ATE		[o]	**PF0157**	123,1×43,7×17,3	OK022
2.0 CDT	08/01 →	85	115							ATE		[o]	**PF0157**	123,1×43,7×17,3	OK022
2.0 CDTi	02/03 →	96	131							ATE		[o]	**PF0157**	123,1×43,7×17,3	OK022
2.0 V6	08/01 →	110	150							ATE		[o]	**PF0157**	123,1×43,7×17,3	OK022
2.5 V6	08/01 →	130	177							ATE		[o]	**PF0157**	123,1×43,7×17,3	OK022
4.6 V8	10/04 →	191	260	ATE		[o]	**PF0153**	156,3×63,3×20		ATE		[o]	**PF0157**	123,1×43,7×17,3	OK022
200 / 211 / 213 / 214															
214 All Types	90 → 06/99			LG	+ABS	[+]	**PF0484**	129,2×69,7×18	OK037	AK		[+]	**PF0457**	88,9×35,2×13	
216 / 218 / 219 / 220															
216 1.6i 16V Cabrio	92 → 06/99			LG	+ABS	[+]	**PF0484**	129,2×69,7×18	OK037	AK		[+]	**PF0457**	88,9×35,2×13	
216 1.6i 16V Coupé	92 → 06/99			LG	+ABS	[+]	**PF0484**	129,2×69,7×18	OK037	AK		[+]	**PF0457**	88,9×35,2×13	
218i 16V	95 → 99			LG		[+]	**PF0484**	129,2×69,7×18	OK037	AK		[+]	**PF0457**	88,9×35,2×13	
218i 16V Coupé	92 → 99			LG		[+]	**PF0484**	129,2×69,7×18	OK037	AK		[+]	**PF0457**	88,9×35,2×13	
218i 16V Vi	96 → 99			LG		[+]	**PF0484**	129,2×69,7×18	OK037	AK		[+]	**PF0457**	88,9×35,2×13	
218 1.8 TD	92 → 06/99			LG	+ABS	[+]	**PF0484**	129,2×69,7×18	OK037	AK		[+]	**PF0457**	88,9×35,2×13	
218 1.8 LSD	92 → 06/99			LG	+ABS	[+]	**PF0484**	129,2×69,7×18	OK037	AK		[+]	**PF0457**	88,9×35,2×13	
218 1.8 GSD	92 → 06/99			LG	+ABS	[+]	**PF0484**	129,2×69,7×18	OK037	AK		[+]	**PF0457**	88,9×35,2×13	
218 1.9 D	91 → 95									AK		[+]	**PF0457**	88,9×35,2×13	
219 1.9 D	91 → 95			LG	Vented Disc	[+]	**PF0484**	129,2×69,7×18	OK037	AK		[+]	**PF0457**	88,9×35,2×13	
220 2.0i 16V GTI	92 → 99			LG		[+]	**PF0484**	129,2×69,7×18	OK037	AK		[+]	**PF0457**	88,9×35,2×13	

		KW	CV	SiS	i	W.i.	MAGNETI MARELLI	W×H×Th (mm)	Extra kit [Opt]	SiS	i	W.i.	MAGNETI MARELLI	W×H×Th (mm)	Extra kit [Opt]
ROVER															
216 / 218 / 219 / 220															
220 2.0i 16V T.	92 → 99			LG		[+]	**PF0484**	129,2×69,7×18	OK037	AK		[+]	**PF0457**	88,9×35,2×13	
220 2.0i 16V Coupé	92 → 99			LG		[+]	**PF0484**	129,2×69,7×18	OK037	AK		[+]	**PF0457**	88,9×35,2×13	
414 / 416 / 418 / 420															
414 1.4 16V S - GS	03/95 → 06/99			LG	+ABS	[+]	**PF0484**	129,2×69,7×18	OK037	AK		[+]	**PF0457**	88,9×35,2×13	
416 1.6i 16V S - GS - GTI	03/95 → 06/99			LG	+ABS	[+]	**PF0484**	129,2×69,7×18	OK037	AK		[+]	**PF0457**	88,9×35,2×13	
418 1.8 TD - SLD - GSD	90 → 99			LG		[+]	**PF0484**	129,2×69,7×18	OK037	AK		[+]	**PF0457**	88,9×35,2×13	
418 1.9 D	90 → 95									AK		[+]	**PF0457**	88,9×35,2×13	
418 1.9 D	90 → 95			LG	Vented Disc	[+]	**PF0484**	129,2×69,7×18	OK037	AK		[+]	**PF0457**	88,9×35,2×13	
420 2.0 16V	91 → 06/99			LG		[+]	**PF0484**	129,2×69,7×18	OK037	AK		[+]	**PF0457**	88,9×35,2×13	
420 2.0 TD	95 → 06/99			LG		[+]	**PF0484**	129,2×69,7×18	OK037	AK		[+]	**PF0457**	88,9×35,2×13	
420 2.0 TDI	95 → 06/99			LG		[+]	**PF0484**	129,2×69,7×18	OK037	AK		[+]	**PF0457**	88,9×35,2×13	
600 (RH)															
618 i/Si	03/96 → 02/99	85	115	AK	14"	[+]	**PF0274**	148,7×57,7×17,3		AK		[+]	**PF0462**	88,9×47,5×14,7	
620 i	08/93 → 06/96	85	115	AK	14"	[+]	**PF0274**	148,7×57,7×17,3		AK		[+]	**PF0462**	88,9×47,5×14,7	
620 Sdi	12/94 → 02/99	77	105	AK	14"	[+]	**PF0274**	148,7×57,7×17,3		AK		[+]	**PF0462**	88,9×47,5×14,7	
620 Si	08/93 → 02/99	96	131	AK	14"	[+]	**PF0274**	148,7×57,7×17,3		AK		[+]	**PF0462**	88,9×47,5×14,7	
620 Ti Vitesse	07/94 → 02/99	147	200	AK	14"	[+]	**PF0274**	148,7×57,7×17,3		AK		[+]	**PF0462**	88,9×47,5×14,7	
623 Si	08/93 → 02/99	116	158	AK	14"	[+]	**PF0274**	148,7×57,7×17,3		AK		[+]	**PF0462**	88,9×47,5×14,7	
820 / 825 / 827															
820 2.0 16V	91 → 93			LG		[+]	**PF0484**	129,2×69,7×18	OK037						
825 2.5	91 → 98			LG		[+]	**PF0484**	129,2×69,7×18	OK037						
827 2.7i V6	91 → 96			LG		[+]	**PF0484**	129,2×69,7×18	OK037						
Streetwise															
1.4	08/03 →	76	103	LG		[-]	**PF0484**	129,2×69,7×18	OK037						
1.4	08/03 →	62	84	LG		[-]	**PF0484**	129,2×69,7×18	OK037						
1.6	01/04 → 05/05	80	109	LG		[-]	**PF0484**	129,2×69,7×18	OK037						
1.8	08/03 →	86	117	LG		[-]	**PF0484**	129,2×69,7×18	OK037						
2.0 TD	08/03 →	74	101	LG		[-]	**PF0484**	129,2×69,7×18	OK037						
SAAB															
9-3 I (YS3D)															
2.0 i	02/98 → 09/02	96	131	ATE		[-]	**PF0386**	156,4×74,2×20		ATE		[-]	**PF0359**	61,7×57,5×15,5	
2.0 SE Turbo	02/98 → 09/02	147	200	ATE		[-]	**PF0386**	156,4×74,2×20		ATE		[-]	**PF0359**	61,7×57,5×15,5	
2.0 Turbo	02/98 → 09/02	136	185	ATE		[-]	**PF0386**	156,4×74,2×20		ATE		[-]	**PF0359**	61,7×57,5×15,5	
2.0 Turbo	10/98 → 09/02	113	154	ATE		[-]	**PF0386**	156,4×74,2×20		ATE		[-]	**PF0359**	61,7×57,5×15,5	
2.0 Turbo	10/99 → 09/02	151	205	ATE		[-]	**PF0386**	156,4×74,2×20		ATE		[-]	**PF0359**	61,7×57,5×15,5	
2.0 Turbo	01/01 → 09/02	110	150	ATE		[-]	**PF0386**	156,4×74,2×20		ATE		[-]	**PF0359**	61,7×57,5×15,5	
2.2 TiD	02/98 → 11/00	85	115	ATE		[-]	**PF0386**	156,4×74,2×20		ATE		[-]	**PF0359**	61,7×57,5×15,5	
2.2 TiD	11/00 → 09/02	92	125	ATE		[-]	**PF0386**	156,4×74,2×20		ATE		[-]	**PF0359**	61,7×57,5×15,5	

		KW	CV												
				SiS	i	W.i.	MAGNETI MARELLI	W×H×Th (mm)	Extra kit [Opt]	SiS	i	W.i.	MAGNETI MARELLI	W×H×Th (mm)	Extra kit [Opt]
SAAB															
9-3 I (YS3D)															
2.3	09/99 → 01/02	169	230	ATE		[-]	PF0386	156,4×74,2×20		ATE		[-]	PF0359	61,7×57,5×15,5	
2.3 i	02/98 → 09/02	110	150	ATE		[-]	PF0386	156,4×74,2×20		ATE		[-]	PF0359	61,7×57,5×15,5	
2.3 Turbo	10/98 → 09/02	165	224	ATE		[-]	PF0386	156,4×74,2×20		ATE		[-]	PF0359	61,7×57,5×15,5	
9-3 I Cabriolet (YS3D)															
2.0 i	02/98 → 08/03	96	131	ATE		[-]	PF0386	156,4×74,2×20		ATE		[-]	PF0359	61,7×57,5×15,5	
2.0 SE Turbo	02/98 → 08/03	147	200	ATE		[-]	PF0386	156,4×74,2×20		ATE		[-]	PF0359	61,7×57,5×15,5	
2.0 Turbo	02/98 → 08/03	136	185	ATE		[-]	PF0386	156,4×74,2×20		ATE		[-]	PF0359	61,7×57,5×15,5	
2.0 Turbo	10/98 → 08/03	113	154	ATE		[-]	PF0386	156,4×74,2×20		ATE		[-]	PF0359	61,7×57,5×15,5	
2.0 Turbo	10/99 → 08/03	151	205	ATE		[-]	PF0386	156,4×74,2×20		ATE		[-]	PF0359	61,7×57,5×15,5	
2.0 Turbo	01/01 → 08/03	110	150	ATE		[-]	PF0386	156,4×74,2×20		ATE		[-]	PF0359	61,7×57,5×15,5	
2.3	09/99 → 01/02	169	230	ATE		[-]	PF0386	156,4×74,2×20		ATE		[-]	PF0359	61,7×57,5×15,5	
2.3 i	02/98 → 08/03	110	150	ATE		[-]	PF0386	156,4×74,2×20		ATE		[-]	PF0359	61,7×57,5×15,5	
2.3 Turbo	10/99 → 08/03	165	224	ATE		[-]	PF0386	156,4×74,2×20		ATE		[-]	PF0359	61,7×57,5×15,5	
9-3 II (YS3F)															
1,8t	09/02 →	110	150	ATE		[o]	PF0162	155,2×69×20,2		ATE		[-]	PF0349	123,1×52×16,4	
1,8t BioPower	01/07 →	110	150	ATE		[o]	PF0162	155,2×69×20,2		ATE		[-]	PF0349	123,1×52×16,4	
1,8t BioPower	05/09 →	129	175	ATE		[o]	PF0162	155,2×69×20,2		ATE		[-]	PF0349	123,1×52×16,4	
1.8 i	01/04 →	90	122	ATE		[o]	PF0162	155,2×69×20,2		ATE		[-]	PF0349	123,1×52×16,4	
1.9 TiD	09/04 →	88	120	ATE		[o]	PF0162	155,2×69×20,2		ATE		[-]	PF0349	123,1×52×16,4	
1.9 TiD	09/04 →	110	150	ATE		[o]	PF0162	155,2×69×20,2		ATE		[-]	PF0349	123,1×52×16,4	
1.9 TTiD	12/07 →	118	160	ATE		[o]	PF0612	155×72,8×20,2		ATE		[-]	PF0349	123,1×52×16,4	
1.9 TTiD	12/07 →	96	130	ATE		[o]	PF0612	155×72,8×20,2		ATE		[-]	PF0349	123,1×52×16,4	
1.9 TTiD	12/07 →	132	180	ATE		[o]	PF0612	155×72,8×20,2		ATE		[-]	PF0349	123,1×52×16,4	
2.0 t	01/11 →	162	220	ATE		[o]	PF0162	155,2×69×20,2		ATE		[-]	PF0349	123,1×52×16,4	
2.0 t	01/07 →	120	163	ATE		[o]	PF0162	155,2×69×20,2		ATE		[-]	PF0349	123,1×52×16,4	
2.0 T	09/02 →	154	210	ATE		[o]	PF0162	155,2×69×20,2		ATE		[-]	PF0349	123,1×52×16,4	
2.0 t	09/02 →	129	175	ATE		[o]	PF0162	155,2×69×20,2		ATE		[-]	PF0349	123,1×52×16,4	
2.0 T	05/09 →	177	241	ATE		[o]	PF0162	155,2×69×20,2		ATE		[-]	PF0349	123,1×52×16,4	
2.0 t XWD	01/07 →	120	163	ATE		[o]	PF0162	155,2×69×20,2		ATE		[-]	PF0349	123,1×52×16,4	
2.0 t BioPower	01/11 →	162	220	ATE		[o]	PF0162	155,2×69×20,2		ATE		[-]	PF0349	123,1×52×16,4	
2.0 t BioPower	01/07 →	120	163	ATE		[o]	PF0162	155,2×69×20,2		ATE		[-]	PF0349	123,1×52×16,4	
2.0 t BioPower	01/07 →	129	175	ATE		[o]	PF0162	155,2×69×20,2		ATE		[-]	PF0349	123,1×52×16,4	
2.0 t BioPower	06/07 →	145	197	ATE		[o]	PF0162	155,2×69×20,2		ATE		[-]	PF0349	123,1×52×16,4	
2.0 t BioPower	05/09 →	147	200	ATE		[o]	PF0162	155,2×69×20,2		ATE		[-]	PF0349	123,1×52×16,4	
2.0 T BioPower	09/02 →	154	210	ATE		[o]	PF0162	155,2×69×20,2		ATE		[-]	PF0349	123,1×52×16,4	
2.0 T BioPower XWD	09/02 →	154	210	ATE		[o]	PF0162	155,2×69×20,2		ATE		[-]	PF0349	123,1×52×16,4	
2.0 t BioPower XWD	01/11 →	120	163	ATE		[o]	PF0162	155,2×69×20,2		ATE		[-]	PF0349	123,1×52×16,4	
2.0 t BioPower XWD	01/11 →	162	220	ATE		[o]	PF0162	155,2×69×20,2		ATE		[-]	PF0349	123,1×52×16,4	
2.0 t XWD	01/11 →	162	220	ATE		[o]	PF0162	155,2×69×20,2		ATE		[-]	PF0349	123,1×52×16,4	
2.0 Turbo Performance	04/04 →	185	252	ATE		[o]	PF0162	155,2×69×20,2		ATE		[-]	PF0349	123,1×52×16,4	

		KW	CV												
				SiS	i	W.i.	MAGNETI MARELLI	W×H×Th (mm)	Extra kit [Opt]	SiS	i	W.i.	MAGNETI MARELLI	W×H×Th (mm)	Extra kit [Opt]
SAAB															
9-3 II (YS3F)															
2.0 Turbo XWD	09/02 →	154	210	ATE		[o]	**PF0162**	155,2×69×20,2		ATE		[-]	**PF0349**	123,1×52×16,4	
2.2 TiD	09/02 →	92	125	ATE		[o]	**PF0162**	155,2×69×20,2		ATE		[-]	**PF0349**	123,1×52×16,4	
2.8 Turbo V6	03/05 →	169	230	ATE		[o]	**PF0162**	155,2×69×20,2		ATE		[-]	**PF0349**	123,1×52×16,4	
2.8 Turbo V6	03/05 →	184	250	ATE		[o]	**PF0162**	155,2×69×20,2		ATE		[-]	**PF0349**	123,1×52×16,4	
2.8 Turbo V6	12/07 →	188	256	ATE		[o]	**PF0162**	155,2×69×20,2		ATE		[-]	**PF0349**	123,1×52×16,4	
2.8 Turbo V6	04/08 →	203	276	ATE		[o]	**PF0162**	155,2×69×20,2		ATE		[-]	**PF0349**	123,1×52×16,4	
2.8 Turbo V6 XWD	05/08 →	206	280	ATE		[o]	**PF0162**	155,2×69×20,2		ATE		[-]	**PF0349**	123,1×52×16,4	
9-3 II Cabriolet (YS3F)															
1,8t	08/03 →	110	150	ATE		[o]	**PF0162**	155,2×69×20,2		ATE		[-]	**PF0349**	123,1×52×16,4	
1,8t BioPower	01/07 →	110	150	ATE		[o]	**PF0162**	155,2×69×20,2		ATE		[-]	**PF0349**	123,1×52×16,4	
1,8t BioPower	01/07 →	129	175	ATE		[o]	**PF0162**	155,2×69×20,2		ATE		[-]	**PF0349**	123,1×52×16,4	
1.9 TiD	01/06 →	110	150	ATE		[o]	**PF0162**	155,2×69×20,2		ATE		[-]	**PF0349**	123,1×52×16,4	
1.9 TTiD	12/07 →	118	160	ATE		[o]	**PF0162**	155,2×69×20,2		ATE		[-]	**PF0349**	123,1×52×16,4	
1.9 TTiD	12/07 →	96	130	ATE		[o]	**PF0162**	155,2×69×20,2		ATE		[-]	**PF0349**	123,1×52×16,4	
1.9 TTiD	12/07 →	132	180	ATE		[o]	**PF0162**	155,2×69×20,2		ATE		[-]	**PF0349**	123,1×52×16,4	
2.0	04/06 → 09/07	143	194	ATE		[o]	**PF0162**	155,2×69×20,2		ATE		[-]	**PF0349**	123,1×52×16,4	
2.0 t	01/11 →	120	163	ATE		[o]	**PF0162**	155,2×69×20,2		ATE		[-]	**PF0349**	123,1×52×16,4	
2.0 t	01/11 →	162	220	ATE		[o]	**PF0162**	155,2×69×20,2		ATE		[-]	**PF0349**	123,1×52×16,4	
2.0 t	08/03 →	129	175	ATE		[o]	**PF0162**	155,2×69×20,2		ATE		[-]	**PF0349**	123,1×52×16,4	
2.0 T	08/03 →	154	210	ATE		[o]	**PF0162**	155,2×69×20,2		ATE		[-]	**PF0349**	123,1×52×16,4	
2.0 t BioPower	01/11 →	120	163	ATE		[o]	**PF0162**	155,2×69×20,2		ATE		[-]	**PF0349**	123,1×52×16,4	
2.0 t BioPower	01/11 →	162	220	ATE		[o]	**PF0162**	155,2×69×20,2		ATE		[-]	**PF0349**	123,1×52×16,4	
2.0 t BioPower	01/07 →	129	175	ATE		[o]	**PF0162**	155,2×69×20,2		ATE		[-]	**PF0349**	123,1×52×16,4	
2.0 t BioPower	06/07 →	145	197	ATE		[o]	**PF0162**	155,2×69×20,2		ATE		[-]	**PF0349**	123,1×52×16,4	
2.0 t BioPower	06/07 →	147	200	ATE		[o]	**PF0162**	155,2×69×20,2		ATE		[-]	**PF0349**	123,1×52×16,4	
2.0 Turbo Performance	04/04 →	185	252	ATE		[o]	**PF0162**	155,2×69×20,2		ATE		[-]	**PF0349**	123,1×52×16,4	
2.8 Turbo V6	02/06 →	169	230	ATE		[o]	**PF0162**	155,2×69×20,2		ATE		[-]	**PF0349**	123,1×52×16,4	
2.8 Turbo V6	02/06 →	184	250	ATE		[o]	**PF0162**	155,2×69×20,2		ATE		[-]	**PF0349**	123,1×52×16,4	
2.8 Turbo V6	12/07 →	188	256	ATE		[o]	**PF0162**	155,2×69×20,2		ATE		[-]	**PF0349**	123,1×52×16,4	
2.8 Turbo V6	02/09 →	203	276	ATE		[o]	**PF0162**	155,2×69×20,2		ATE		[-]	**PF0349**	123,1×52×16,4	
2.8 Turbo V6	02/09 →	206	280	ATE		[o]	**PF0162**	155,2×69×20,2		ATE		[-]	**PF0349**	123,1×52×16,4	
9-3 II Sport Sedan (YS3F)															
1.8 i	03/05 →	90	122	ATE		[o]	**PF0612**	155×72,8×20,2		ATE		[-]	**PF0349**	123,1×52×16,4	
1.8 t	03/05 →	110	150	ATE		[o]	**PF0612**	155×72,8×20,2		ATE		[-]	**PF0349**	123,1×52×16,4	
1.8 t BioPower	01/07 →	110	150	ATE		[o]	**PF0612**	155×72,8×20,2		ATE		[-]	**PF0349**	123,1×52×16,4	
1.9 TiD	03/05 →	88	120	ATE		[o]	**PF0612**	155×72,8×20,2		ATE		[-]	**PF0349**	123,1×52×16,4	
1.9 TiD	03/05 →	110	150	ATE		[o]	**PF0612**	155×72,8×20,2		ATE		[-]	**PF0349**	123,1×52×16,4	
1.9 TTiD	12/07 →	96	130	ATE		[o]	**PF0612**	155×72,8×20,2		ATE		[-]	**PF0349**	123,1×52×16,4	
1.9 TTiD	12/07 →	118	160	ATE		[o]	**PF0612**	155×72,8×20,2		ATE		[-]	**PF0349**	123,1×52×16,4	
1.9 TTiD	12/07 →	132	180	ATE		[o]	**PF0612**	155×72,8×20,2		ATE		[-]	**PF0349**	123,1×52×16,4	
2.0	04/06 → 09/07	143	194	ATE		[o]	**PF0612**	155×72,8×20,2		ATE		[-]	**PF0349**	123,1×52×16,4	

		KW	CV													
				SiS	i	W.i.	MAGNETI MARELLI	W×H×Th (mm)	Extra kit [Opt]	SiS	i	W.i.	MAGNETI MARELLI	W×H×Th (mm)	Extra kit [Opt]
SAAB															
9-3 II Sport Sedan (YS3F)															
2.0 1,8 t BioPower	01/07→	129	175	ATE		[o]	**PF0612**	155×72,8×20,2		ATE		[-]	**PF0349**	123,1×52×16,4	
2.0 t	01/07→	120	163	ATE		[o]	**PF0612**	155×72,8×20,2		ATE		[-]	**PF0349**	123,1×52×16,4	
2.0 t	01/11→	162	220	ATE		[o]	**PF0612**	155×72,8×20,2		ATE		[-]	**PF0349**	123,1×52×16,4	
2.0 t	03/05→	110	150	ATE		[o]	**PF0612**	155×72,8×20,2		ATE		[-]	**PF0349**	123,1×52×16,4	
2.0 t	03/05→	129	175	ATE		[o]	**PF0612**	155×72,8×20,2		ATE		[-]	**PF0349**	123,1×52×16,4	
2.0 T	03/05→	154	209	ATE		[o]	**PF0612**	155×72,8×20,2		ATE		[-]	**PF0349**	123,1×52×16,4	
2.0 T	02/09→	147	200	ATE		[o]	**PF0612**	155×72,8×20,2		ATE		[-]	**PF0349**	123,1×52×16,4	
2.0 t XWD	01/07→	120	163	ATE		[o]	**PF0612**	155×72,8×20,2		ATE		[-]	**PF0349**	123,1×52×16,4	
2.0 T BioPower	02/09→	147	200	ATE		[o]	**PF0612**	155×72,8×20,2		ATE		[-]	**PF0349**	123,1×52×16,4	
2.0 T Bio Power XWD	06/08→	154	209	ATE		[o]	**PF0612**	155×72,8×20,2		ATE		[-]	**PF0349**	123,1×52×16,4	
2.0 t BioPower	01/11→	120	163	ATE		[o]	**PF0612**	155×72,8×20,2		ATE		[-]	**PF0349**	123,1×52×16,4	
2.0 t BioPower	01/11→	162	220	ATE		[o]	**PF0612**	155×72,8×20,2		ATE		[-]	**PF0349**	123,1×52×16,4	
2.0 t BioPower	01/07→	129	175	ATE		[o]	**PF0612**	155×72,8×20,2		ATE		[-]	**PF0349**	123,1×52×16,4	
2.0 t BioPower	06/07→	145	197	ATE		[o]	**PF0612**	155×72,8×20,2		ATE		[-]	**PF0349**	123,1×52×16,4	
2.0 t BioPower XWD	01/11→	120	163	ATE		[o]	**PF0612**	155×72,8×20,2		ATE		[-]	**PF0349**	123,1×52×16,4	
2.0 t XWD	01/11→	162	220	ATE		[o]	**PF0612**	155×72,8×20,2		ATE		[-]	**PF0349**	123,1×52×16,4	
2.0 T XWD	06/08→	154	209	ATE		[o]	**PF0612**	155×72,8×20,2		ATE		[-]	**PF0349**	123,1×52×16,4	
2.8 Turbo V6	03/05→	169	230	ATE		[o]	**PF0612**	155×72,8×20,2		ATE		[-]	**PF0349**	123,1×52×16,4	
2.8 Turbo V6	03/05→	184	250	ATE		[o]	**PF0612**	155×72,8×20,2		ATE		[-]	**PF0349**	123,1×52×16,4	
2.8 Turbo V6	12/07→	188	256	ATE		[o]	**PF0612**	155×72,8×20,2		ATE		[-]	**PF0349**	123,1×52×16,4	
2.8 Turbo V6	05/08→	203	276	ATE		[o]	**PF0612**	155×72,8×20,2		ATE		[-]	**PF0349**	123,1×52×16,4	
2.8 Turbo V6 XWD	05/08→	206	280	ATE		[o]	**PF0612**	155×72,8×20,2		ATE		[-]	**PF0349**	123,1×52×16,4	
9-3X															
1.9 TTiD	01/10→	96	131	ATE		[o]	**PF0162**	155,2×69×20,2		ATE		[-]	**PF0243**	123,1×52×16,4	
1.9 TTiD	01/10→	96	131	ATE		[o]	**PF0612**	155×72,8×20,2		ATE		[-]	**PF0243**	123,1×52×16,4	
1.9 TTiD	02/09→	132	180	ATE		[o]	**PF0162**	155,2×69×20,2		ATE		[-]	**PF0243**	123,1×52×16,4	
1.9 TTiD	02/09→	132	180	ATE		[o]	**PF0612**	155×72,8×20,2		ATE		[-]	**PF0243**	123,1×52×16,4	
2.0 T	02/09→	154	209	ATE		[o]	**PF0162**	155,2×69×20,2		ATE		[-]	**PF0243**	123,1×52×16,4	
2.0 T	02/09→	154	209	ATE		[o]	**PF0612**	155×72,8×20,2		ATE		[-]	**PF0243**	123,1×52×16,4	
2.0 T BioPower	01/11→	162	220	ATE		[o]	**PF0162**	155,2×69×20,2		ATE		[-]	**PF0243**	123,1×52×16,4	
2.0 T BioPower	01/11→	162	220	ATE		[o]	**PF0612**	155×72,8×20,2		ATE		[-]	**PF0243**	123,1×52×16,4	
2.0 T BioPower	02/09→	154	209	ATE		[o]	**PF0162**	155,2×69×20,2		ATE		[-]	**PF0243**	123,1×52×16,4	
2.0 T BioPower	02/09→	154	209	ATE		[o]	**PF0612**	155×72,8×20,2		ATE		[-]	**PF0243**	123,1×52×16,4	
9-5 Berlina / SW (YS3E)															
2.0 T.	09/97→									ATE	X3025752→	[o]	**PF0157**	123,1×43,7×17,3	OK022
2.0i 16V Lpt /S/SE	97→98			ATE		[-]	**PF0360**	156,4×74,2×20		ATE	←X3025751	[-]	**PF0368**	61,5×61×15	
2.0i 16V Lpt /S/SE	99→									ATE	X3025752→	[o]	**PF0157**	123,1×43,7×17,3	OK022

		KW	CV													
				SiS	i	W.i.	MAGNETI MARELLI	W×H×Th (mm)	Extra kit [Opt]	SiS	i	W.i.	MAGNETI MARELLI	W×H×Th (mm)	Extra kit [Opt]
SAAB																
9-5 Berlina / SW (YS3E)																
2.0i 16V T. S/SE	97 → 98			ATE		[-]	**PF0360**	156,4×74,2×20		ATE	← X3025751	[-]	**PF0368**	61,5×61×15	
2.0i 16V T. S/SE	99 →									ATE	X3025752 →	[o]	**PF0157**	123,1×43,7×17,3	OK022
2.2 Tid	03/02 →									ATE		[o]	**PF0157**	123,1×43,7×17,3	OK022
2.3 T.	01/01 →									ATE	X3025752 →	[o]	**PF0157**	123,1×43,7×17,3	OK022
2.3i 16V Lpt/S/SE	97 → 98			ATE		[-]	**PF0360**	156,4×74,2×20		ATE	← X3025751	[-]	**PF0368**	61,5×61×15	
2.3i 16V Lpt/S/SE	99 →									ATE	X3025752 →	[o]	**PF0157**	123,1×43,7×17,3	OK022
3.0i 24V Lpt	97 → 98			ATE		[-]	**PF0360**	156,4×74,2×20		ATE	← X3025751	[-]	**PF0368**	61,5×61×15	
3.0i 24V Lpt	99 →									ATE	X3025752 →	[o]	**PF0157**	123,1×43,7×17,3	OK022
3.0 Tid	07/01 →									ATE	X3025752 →	[o]	**PF0157**	123,1×43,7×17,3	OK022
3.0 V6t	01/98 →									ATE	X3025752 →	[o]	**PF0157**	123,1×43,7×17,3	OK022
9-5 II (YS3G)																
1.6 T	05/10 →			LG	17"/18"	[+]	**PF0363**	184,7×65,8×17		LG	Ø Disc 292	[+]	**PF0690**	106,5×47,1×17,2	OK071
1.6 T	05/10 →			MN	16"	[+]	**PF0723**	131,5×59,6×19		LG	Ø Disc 315	[+]	**PF0690**	106,5×47,1×17,2	OK075
1.6 T	05/10 →			MN	17"	[+]	**PF0724**	142×66,7×18,8		LG	Ø Disc 315	[+]	**PF0690**	106,5×47,1×17,2	OK075
2.0 T	05/10 →			LG	17"/18"	[+]	**PF0363**	184,7×65,8×17		LG	Ø Disc 292	[+]	**PF0690**	106,5×47,1×17,2	OK071
2.0 T	05/10 →			MN	16"	[+]	**PF0723**	131,5×59,6×19		LG	Ø Disc 315	[+]	**PF0690**	106,5×47,1×17,2	OK075
2.0 T	05/10 →			MN	17"	[+]	**PF0724**	142×66,7×18,8		LG	Ø Disc 315	[+]	**PF0690**	106,5×47,1×17,2	OK075
2.0 T XWD	05/10 →			LG	17"/18"	[+]	**PF0363**	184,7×65,8×17		LG	Ø Disc 292	[+]	**PF0690**	106,5×47,1×17,2	OK071
2.0 T XWD	05/10 →			MN	16"	[+]	**PF0723**	131,5×59,6×19		LG	Ø Disc 315	[+]	**PF0690**	106,5×47,1×17,2	OK075
2.0 T XWD	05/10 →			MN	17"	[+]	**PF0724**	142×66,7×18,8		LG	Ø Disc 315	[+]	**PF0690**	106,5×47,1×17,2	OK075
2.0 T BioPower	05/10 →			LG	17"/18"	[+]	**PF0363**	184,7×65,8×17		LG	Ø Disc 292	[+]	**PF0690**	106,5×47,1×17,2	OK071
2.0 T BioPower	05/10 →			MN	16"	[+]	**PF0723**	131,5×59,6×19		LG	Ø Disc 315	[+]	**PF0690**	106,5×47,1×17,2	OK075
2.0 T BioPower	05/10 →			MN	17"	[+]	**PF0724**	142×66,7×18,8		LG	Ø Disc 315	[+]	**PF0690**	106,5×47,1×17,2	OK075
2.0 T BioPower XWD	05/10 →			LG	17"/18"	[+]	**PF0363**	184,7×65,8×17		LG	Ø Disc 292	[+]	**PF0690**	106,5×47,1×17,2	OK071
2.0 T BioPower XWD	05/10 →			MN	16"	[+]	**PF0723**	131,5×59,6×19		LG	Ø Disc 315	[+]	**PF0690**	106,5×47,1×17,2	OK075
2.0 T BioPower XWD	05/10 →			MN	17"	[+]	**PF0724**	142×66,7×18,8		LG	Ø Disc 315	[+]	**PF0690**	106,5×47,1×17,2	OK075
2.0 TiD	05/10 →			LG	17"/18"	[+]	**PF0363**	184,7×65,8×17		LG	Ø Disc 292	[+]	**PF0690**	106,5×47,1×17,2	OK071
2.0 TiD	05/10 →			MN	16"	[+]	**PF0723**	131,5×59,6×19		LG	Ø Disc 315	[+]	**PF0690**	106,5×47,1×17,2	OK075
2.0 TiD	05/10 →			MN	17"	[+]	**PF0724**	142×66,7×18,8		LG	Ø Disc 315	[+]	**PF0690**	106,5×47,1×17,2	OK075
2.8 T V6 XWD	05/10 →			LG	17"/18"	[+]	**PF0363**	184,7×65,8×17		LG	Ø Disc 292	[+]	**PF0690**	106,5×47,1×17,2	OK071
2.8 T V6 XWD	05/10 →			MN	16"	[+]	**PF0723**	131,5×59,6×19		LG	Ø Disc 315	[+]	**PF0690**	106,5×47,1×17,2	OK075
2.8 T V6 XWD	05/10 →			MN	17"	[+]	**PF0724**	142×66,7×18,8		LG	Ø Disc 315	[+]	**PF0690**	106,5×47,1×17,2	OK075
900 II																
2.0 -16 Turbo	07/93 → 02/98	136	185	ATE		[-]	**PF0360**	156,4×74,2×20		ATE		[-]	**PF0359**	61,7×57,5×15,5	
2.0 i	08/94 → 02/98	96	131	ATE		[-]	**PF0360**	156,4×74,2×20		ATE		[-]	**PF0359**	61,7×57,5×15,5	
2.0 i	07/93 → 07/94	98	133	ATE		[-]	**PF0360**	156,4×74,2×20		ATE		[-]	**PF0359**	61,7×57,5×15,5	
2.3 -16	07/93 → 02/98	110	150	ATE		[-]	**PF0360**	156,4×74,2×20		ATE		[-]	**PF0359**	61,7×57,5×15,5	

		KW	CV												
				SiS	i	W.i.	MAGNETI MARELLI	W×H×Th (mm)	Extra kit [Opt]	SiS	i	W.i.	MAGNETI MARELLI	W×H×Th (mm)	Extra kit [Opt]
SAAB															
900 II															
2.5 -24 V6	07/93 → 02/98	125	170	ATE		[-]	**PF0360**	156,4×74,2×20		ATE		[-]	**PF0359**	61,7×57,5×15,5	
900 II Cabriolet															
2.0 -16 Turbo	12/93 → 02/98	136	185	ATE		[-]	**PF0360**	156,4×74,2×20		ATE		[-]	**PF0359**	61,7×57,5×15,5	
2.0 i	12/93 → 02/98	96	131	ATE		[-]	**PF0360**	156,4×74,2×20		ATE		[-]	**PF0359**	61,7×57,5×15,5	
2.3 -16	12/93 → 02/98	110	150	ATE		[-]	**PF0360**	156,4×74,2×20		ATE		[-]	**PF0359**	61,7×57,5×15,5	
2.5 -24 V6	12/93 → 02/98	125	170	ATE		[-]	**PF0360**	156,4×74,2×20		ATE		[-]	**PF0359**	61,7×57,5×15,5	
900 II Coupé															
2.0 -16 Turbo	12/93 → 02/98	136	185	ATE		[-]	**PF0360**	156,4×74,2×20		ATE		[-]	**PF0359**	61,7×57,5×15,5	
2.0 i	12/93 → 07/94	98	133	ATE		[-]	**PF0360**	156,4×74,2×20		ATE		[-]	**PF0359**	61,7×57,5×15,5	
2.0 i	08/94 → 02/98	96	131	ATE		[-]	**PF0360**	156,4×74,2×20		ATE		[-]	**PF0359**	61,7×57,5×15,5	
2.3 -16	12/93 → 02/98	110	150	ATE		[-]	**PF0360**	156,4×74,2×20		ATE		[-]	**PF0359**	61,7×57,5×15,5	
2.5 -24 V6	12/93 → 02/98	125	170	ATE		[-]	**PF0360**	156,4×74,2×20		ATE		[-]	**PF0359**	61,7×57,5×15,5	
SEAT															
Alhambra (7V8, 7V9)															
1.8 T 20V	10/97 → 03/10	110	150	ATE		[-]	**PF0260**	156,4×74,2×19		LG		[-]	**PF0144**	87×53×15	OK039
1.8i	00 →			ATE		[+]	**PF0261**	156,4×74,2×19		LG		[+]	**PF0259**	87×53×17	OK039
1.8i	00 →									LG	+2 w.i.	[+]	**PF0258**	94,9×51×16,8	OK030
1.9 TDI - S - SE - SXE	96 →			ATE		[-]	**PF0260**	156,4×74,2×19		LG		[-]	**PF0144**	87×53×15	OK039
1.9 TDI	00 →			ATE		[+]	**PF0261**	156,4×74,2×19		LG		[+]	**PF0259**	87×53×17	OK039
1.9 TDI	00 →									LG	+2 w.i.	[+]	**PF0258**	94,9×51×16,8	OK030
1.9 TDI	05/00 →			ATE	T7M2500001 →	[+]	**PF0262**	156,4×78,7×19		LG		[+]	**PF0259**	87×53×17	OK039
2.0i	95 →			ATE		[-]	**PF0260**	156,4×74,2×19		LG		[-]	**PF0144**	87×53×15	OK039
2.0i	00 →			ATE		[+]	**PF0261**	156,4×74,2×19		LG		[+]	**PF0259**	87×53×17	OK039
2.0i	05/00 →	85		ATE	T7M2500001 →	[+]	**PF0262**	156,4×78,7×19		LG		[+]	**PF0259**	87×53×17	OK039
2.8i V6	95 →			ATE		[-]	**PF0260**	156,4×74,2×19		LG		[-]	**PF0144**	87×53×15	OK039
2.8 V6	06/00 → 03/10	150	204							LG	+2 w.i.	[+]	**PF0258**	94,9×51×16,8	OK030
2.8 V6 4motion	06/00 → 03/10	150	204							LG	+2 w.i.	[+]	**PF0258**	94,9×51×16,8	OK030
Alhambra (710)															
1.4 TSI	06/10 →	110	150	ATE		[+]	**PF0659**	155,1×66,6×19,5		LG		[-]	**PF0658**	105,3×56,3×17	OK039
1.4 TSI	06/10 →	110	150							LG		[-]	**PF0658**	105,3×56,3×17	OK039
2.0 TDI	06/10 →	103	140	ATE		[+]	**PF0659**	155,1×66,6×19,5		LG		[-]	**PF0658**	105,3×56,3×17	OK039
2.0 TDI	06/10 →	103	140							LG		[-]	**PF0658**	105,3×56,3×17	OK039
2.0 TDI	06/10 →	125	170	ATE		[+]	**PF0659**	155,1×66,6×19,5		LG		[-]	**PF0658**	105,3×56,3×17	OK039
2.0 TDI	06/10 →	125	170							LG		[-]	**PF0658**	105,3×56,3×17	OK039
2.0 TDI	05/11 →	85	115	ATE		[+]	**PF0659**	155,1×66,6×19,5		LG		[-]	**PF0658**	105,3×56,3×17	OK039
2.0 TDI	05/11 →	85	115							LG		[-]	**PF0658**	105,3×56,3×17	OK039
2.0 TDI	06/10 → 05/11	100	136	ATE		[+]	**PF0659**	155,1×66,6×19,5		LG		[-]	**PF0658**	105,3×56,3×17	OK039
2.0 TDI	06/10 → 05/11	100	136							LG		[-]	**PF0658**	105,3×56,3×17	OK039
2.0 TDI All-wheel Drive	05/11 →	103	140	ATE		[+]	**PF0659**	155,1×66,6×19,5		LG		[-]	**PF0658**	105,3×56,3×17	OK039

		KW	CV													
				SiS	i	W.i.	MAGNETI MARELLI	W×H×Th (mm)	Extra kit [Opt]	SiS	i	W.i.	MAGNETI MARELLI	W×H×Th (mm)	Extra kit [Opt]
SEAT																
Alhambra (710)																
2.0 TDI All-wheel Drive	05/11 →	103	140							LG		[-]	**PF0658**	105,3×56,3×17	OK039
2.0 TSI	11/10 →	147	200	ATE		[+]	**PF0659**	155,1×66,6×19,5		LG		[-]	**PF0658**	105,3×56,3×17	OK039
2.0 TSI	11/10 →	147	200							LG		[-]	**PF0658**	105,3×56,3×17	OK039
1.8 T 20V	10/97 → 03/10	110	150	ATE		[+]	**PF0659**	155,1×66,6×19,5		LG		[-]	**PF0658**	105,3×56,3×17	OK039
1.8 T 20V	10/97 → 03/10	110	150							LG		[-]	**PF0658**	105,3×56,3×17	OK039
Altea (5P1)																
1.2 TSI	04/10 →	77	105	ATE		[+]	**PF0135**	155,1×66×20,1		LG		[-]	**PF0133**	105,5×56×17	OK039/ OK085
1.2 TSI	04/10 →	77	105	ATE		[+]	**PF0132**	146×54,7×19,5		LG		[-]	**PF0144**	87×53×15	OK039
1.4 16V	05/06 →	63	86	ATE		[+]	**PF0135**	155,1×66×20,1		LG		[-]	**PF0133**	105,5×56×17	OK039/ OK085
1.4 16V	05/06 →	63	86	ATE		[+]	**PF0132**	146×54,7×19,5		LG		[-]	**PF0144**	87×53×15	OK039
1.4 TSI	11/07 →	92	125	ATE		[+]	**PF0135**	155,1×66×20,1		LG		[-]	**PF0133**	105,5×56×17	OK039/ OK085
1.4 TSI	11/07 →	92	125	ATE		[+]	**PF0132**	146×54,7×19,5		LG		[-]	**PF0144**	87×53×15	OK039
1.6	03/04 →	75	102	ATE		[+]	**PF0135**	155,1×66×20,1		LG		[-]	**PF0133**	105,5×56×17	OK039/ OK085
1.6	03/04 →	75	102	ATE		[+]	**PF0132**	146×54,7×19,5		LG		[-]	**PF0144**	87×53×15	OK039
1.6 LPG	09/09 →	75	102	ATE		[+]	**PF0135**	155,1×66×20,1		LG		[-]	**PF0133**	105,5×56×17	OK039/ OK085
1.6 LPG	09/09 →	75	102	ATE		[+]	**PF0132**	146×54,7×19,5		LG		[-]	**PF0144**	87×53×15	OK039
1.6 TDI	10/09 →	77	105	ATE		[+]	**PF0135**	155,1×66×20,1		LG		[-]	**PF0133**	105,5×56×17	OK039/ OK085
1.6 TDI	10/09 →	77	105	ATE		[+]	**PF0132**	146×54,7×19,5		LG		[-]	**PF0144**	87×53×15	OK039
1.6 TDI	11/10 →	66	90	ATE		[+]	**PF0135**	155,1×66×20,1		LG		[-]	**PF0133**	105,5×56×17	OK039/ OK085
1.6 TDI	11/10 →	66	90	ATE		[+]	**PF0132**	146×54,7×19,5		LG		[-]	**PF0144**	87×53×15	OK039
1.8 TFSI	01/07 →	118	160	ATE		[+]	**PF0135**	155,1×66×20,1		LG		[-]	**PF0133**	105,5×56×17	OK039/ OK085
1.8 TFSI	01/07 →	118	160	ATE		[+]	**PF0132**	146×54,7×19,5		LG		[-]	**PF0144**	87×53×15	OK039
1.9 TDI	04/04 →	77	105	ATE		[+]	**PF0135**	155,1×66×20,1		LG		[-]	**PF0133**	105,5×56×17	OK039/ OK085
1.9 TDI	04/04 →	77	105	ATE		[+]	**PF0132**	146×54,7×19,5		LG		[-]	**PF0144**	87×53×15	OK039
1.9 TDI	08/09 →	66	90	ATE		[+]	**PF0135**	155,1×66×20,1		LG		[-]	**PF0133**	105,5×56×17	OK039/ OK085
1.9 TDI	08/09 →	66	90	ATE		[+]	**PF0132**	146×54,7×19,5		LG		[-]	**PF0144**	87×53×15	OK039
2.0 FSI	05/04 → 03/09	110	150	ATE		[+]	**PF0135**	155,1×66×20,1		LG		[-]	**PF0133**	105,5×56×17	OK039/ OK085
2.0 FSI	05/04 → 03/09	110	150	ATE		[+]	**PF0132**	146×54,7×19,5		LG		[-]	**PF0144**	87×53×15	OK039
2.0 TDI	03/04 → 05/09	100	136	ATE		[+]	**PF0135**	155,1×66×20,1		LG		[-]	**PF0133**	105,5×56×17	OK039/ OK085
2.0 TDI	03/04 → 05/09	100	136	ATE		[+]	**PF0132**	146×54,7×19,5		LG		[-]	**PF0144**	87×53×15	OK039

		KW	CV	SiS	i	W.i.	MAGNETI MARELLI	W×H×Th (mm)	Extra kit [Opt]	SiS	i	W.i.	MAGNETI MARELLI	W×H×Th (mm)	Extra kit [Opt]
SEAT															
Altea (5P1)															
2.0 TDI	03/06 →	125	170	ATE		[+]	**PF0135**	155,1×66×20,1		LG		[-]	**PF0133**	105,5×56×17	OK039/ OK085
2.0 TDI	03/06 →	125	170	ATE		[+]	**PF0132**	146×54,7×19,5		LG		[-]	**PF0144**	87×53×15	OK039
2.0 TDI	11/05 →	103	140	ATE		[+]	**PF0135**	155,1×66×20,1		LG		[-]	**PF0133**	105,5×56×17	OK039/ OK085
2.0 TDI	11/05 →	103	140	ATE		[+]	**PF0132**	146×54,7×19,5		LG		[-]	**PF0144**	87×53×15	OK039
2.0 TDI 16V	03/04 →	103	140	ATE		[+]	**PF0135**	155,1×66×20,1		LG		[-]	**PF0133**	105,5×56×17	OK039/ OK085
2.0 TDI 16V	03/04 →	103	140	ATE		[+]	**PF0132**	146×54,7×19,5		LG		[-]	**PF0144**	87×53×15	OK039
2.0 TFSI	04/06 → 05/09	147	200	ATE		[+]	**PF0135**	155,1×66×20,1		LG		[-]	**PF0133**	105,5×56×17	OK039/ OK085
2.0 TFSI	04/06 → 05/09	147	200	ATE		[+]	**PF0132**	146×54,7×19,5		LG		[-]	**PF0144**	87×53×15	OK039
Altea XL (5P5-5P8)															
1.2 TSI	04/10 →	77	105	ATE		[+]	**PF0132**	146×54,7×19,5		LG		[-]	**PF0348**	87×53×16	OK039
1.4 16V	10/06 →	63	86	ATE		[+]	**PF0135**	155,1×66×20,1		LG		[-]	**PF0348**	87×53×16	OK039
1.4 16V	10/06 →	63	86	ATE		[+]	**PF0132**	146×54,7×19,5		BSC	1KS/ØDisc 272×16	[-]	**PF0441**	109,2×53,3×17,5	OK033
1.4 TSI	11/07 →	92	125	ATE		[+]	**PF0135**	155,1×66×20,1		LG		[-]	**PF0348**	87×53×16	OK039
1.4 TSI	11/07 →	92	125	ATE		[+]	**PF0132**	146×54,7×19,5		BSC	1KS/ØDisc 272×16	[-]	**PF0441**	109,2×53,3×17,5	OK033
1.6	10/06 →	75	102	ATE		[+]	**PF0135**	155,1×66×20,1		LG		[-]	**PF0348**	87×53×16	OK039
1.6	10/06 →	75	102	ATE		[+]	**PF0132**	146×54,7×19,5		BSC	1KS/ØDisc 272×16	[-]	**PF0441**	109,2×53,3×17,5	OK033
1.6 LPG	09/09 →	75	102	ATE		[+]	**PF0135**	155,1×66×20,1		LG		[-]	**PF0348**	87×53×16	OK039
1.6 LPG	09/09 →	75	102	ATE		[+]	**PF0132**	146×54,7×19,5		BSC	1KS/ØDisc 272×16	[-]	**PF0441**	109,2×53,3×17,5	OK033
1.6 Multifuel	10/06 →	75	102	ATE		[+]	**PF0135**	155,1×66×20,1		LG		[-]	**PF0348**	87×53×16	OK039
1.6 Multifuel	10/06 →	75	102	ATE		[+]	**PF0132**	146×54,7×19,5		BSC	1KS/ØDisc 272×16	[-]	**PF0441**	109,2×53,3×17,5	OK033
1.6 TDI	10/09 →	77	105	ATE		[+]	**PF0135**	155,1×66×20,1		LG		[-]	**PF0348**	87×53×16	OK039
1.6 TDI	10/09 →	77	105	ATE		[+]	**PF0132**	146×54,7×19,5		BSC	1KS/ØDisc 272×16	[-]	**PF0441**	109,2×53,3×17,5	OK033
1.6 TDI	11/10 →	66	90	ATE		[+]	**PF0135**	155,1×66×20,1		LG		[-]	**PF0348**	87×53×16	OK039
1.6 TDI	11/10 →	66	90	ATE		[+]	**PF0132**	146×54,7×19,5		BSC	1KS/ØDisc 272×16	[-]	**PF0441**	109,2×53,3×17,5	OK033
1.8 TFSI	01/07 →	118	160	ATE		[+]	**PF0135**	155,1×66×20,1		LG		[-]	**PF0348**	87×53×16	OK039
1.8 TFSI	01/07 →	118	160	ATE		[+]	**PF0132**	146×54,7×19,5		BSC	1KS/ØDisc 272×16	[-]	**PF0441**	109,2×53,3×17,5	OK033
1.9 TDI	10/06 →	77	105	ATE		[+]	**PF0135**	155,1×66×20,1		LG		[-]	**PF0348**	87×53×16	OK039
1.9 TDI	10/06 →	77	105	ATE		[+]	**PF0132**	146×54,7×19,5		BSC	1KS/ØDisc 272×16	[-]	**PF0441**	109,2×53,3×17,5	OK033
1.9 TDI	08/09 →	66	90	ATE		[+]	**PF0135**	155,1×66×20,1		LG		[-]	**PF0348**	87×53×16	OK039
1.9 TDI	08/09 →	66	90	ATE		[+]	**PF0132**	146×54,7×19,5		BSC	1KS/ØDisc 272×16	[-]	**PF0441**	109,2×53,3×17,5	OK033

		KW	CV	SiS	i	W.i.	MAGNETI MARELLI	W×H×Th (mm)	Extra kit [Opt]	SiS	i	W.i.	MAGNETI MARELLI	W×H×Th (mm)	Extra kit [Opt]
SEAT															
Altea XL (5P5-5P8)															
2.0 FSI	10/06 → 03/09	110	150	ATE		[+]	**PF0135**	155,1×66×20,1		LG		[-]	**PF0348**	87×53×16	OK039
2.0 FSI	10/06 → 03/09	110	150	ATE		[+]	**PF0132**	146×54,7×19,5		BSC	1KS/ØDisc 272×16	[-]	**PF0441**	109,2×53,3×17,5	OK033
2.0 TDI	10/06 →	103	140	ATE		[+]	**PF0135**	155,1×66×20,1		LG		[-]	**PF0348**	87×53×16	OK039
2.0 TDI	10/06 →	103	140	ATE		[+]	**PF0132**	146×54,7×19,5		BSC	1KS/ØDisc 272×16	[-]	**PF0441**	109,2×53,3×17,5	OK033
2.0 TDI	06/07 →	125	170	ATE		[+]	**PF0135**	155,1×66×20,1		LG		[-]	**PF0348**	87×53×16	OK039
2.0 TDI	06/07 →	125	170	ATE		[+]	**PF0132**	146×54,7×19,5		BSC	1KS/ØDisc 272×16	[-]	**PF0441**	109,2×53,3×17,5	OK033
2.0 TDI	11/06 → 03/09	100	136	ATE		[+]	**PF0135**	155,1×66×20,1		LG		[-]	**PF0348**	87×53×16	OK039
2.0 TDI	11/06 → 03/09	100	136	ATE		[+]	**PF0132**	146×54,7×19,5		BSC	1KS/ØDisc 272×16	[-]	**PF0441**	109,2×53,3×17,5	OK033
2.0 TDI 4x4	06/07 →	103	140	ATE		[+]	**PF0135**	155,1×66×20,1		LG		[-]	**PF0348**	87×53×16	OK039
2.0 TDI 4x4	06/07 →	103	140	ATE		[+]	**PF0132**	146×54,7×19,5		LG	1KS	[-]	**PF0348**	87×53×16	OK039
2.0 TDI 16V	10/06 →	103	140	ATE		[+]	**PF0135**	155,1×66×20,1		LG		[-]	**PF0348**	87×53×16	OK039
2.0 TDI 16V	10/06 →	103	140	ATE		[+]	**PF0132**	146×54,7×19,5		LG	1KS	[-]	**PF0348**	87×53×16	OK039
2.0 TDI 4x4	06/07 →	125	170	ATE		[+]	**PF0135**	155,1×66×20,1		LG		[-]	**PF0348**	87×53×16	OK039
2.0 TDI 4x4	06/07 →	125	170	ATE		[+]	**PF0132**	146×54,7×19,5		LG	1KS	[-]	**PF0348**	87×53×16	OK039
2.0 TFSI 4x4	06/07 → 05/09	147	200	ATE		[+]	**PF0135**	155,1×66×20,1		LG		[-]	**PF0348**	87×53×16	OK039
2.0 TFSI 4x4	06/07 → 05/09	147	200	ATE		[+]	**PF0132**	146×54,7×19,5		LG	1KS	[-]	**PF0348**	87×53×16	OK039
2.0 TFSI 4x4	05/09 →	155	211	ATE		[+]	**PF0135**	155,1×66×20,1		LG		[-]	**PF0348**	87×53×16	OK039
2.0 TFSI 4x4	05/09 →	155	211	ATE		[+]	**PF0132**	146×54,7×19,5		LG	1KS	[-]	**PF0348**	87×53×16	OK039
Arosa (6H)															
1.0	05/97 → 06/04	37	50	ATE		[-]	**PF0388**	137,8×49×17							
1.0	11/98 → 02/00	37	50	ATE		[-]	**PF0388**	137,8×49×17							
1.0	10/98 → 02/00	37	50	ATE		[-]	**PF0388**	137,8×49×17							
1.4	05/97 → 06/04	44	60	ATE		[-]	**PF0388**	137,8×49×17							
1.4 16V	01/00 → 06/04	74	100	LG		[-]	**PF0145**	119×69,5×19,4	OK032	LG		[-]	**PF0144**	87×53×15	OK039
1.4 TDI	97 → 99			ATE		[-]	**PF0388**	137,8×49×17							
1.4 TDI	01/00 → 06/04	55	75	ATE		[-]	**PF0411**	141,8×48,1×14,3							
1.7 SDI	08/97 → 06/04	44	60	ATE		[-]	**PF0388**	137,8×49×17							
Cordoba I															
1.0i	96 → 98			KH		[-]	**PF0395**	138×51,2×17,2							
1.4	93 → 98			KH		[-]	**PF0395**	138×51,2×17,2							
1.4i Dream	96 → 98			KH		[-]	**PF0393**	138×49×17,3							
1.4i SW	99 →			ATE		[-]	**PF0391**	137,8×49×15							
1.6i	93 → 96			KH		[-]	**PF0392**	138×49×19,5							
1.6i 16V SX/ SXE	96 → 98			ATE		[-]	**PF0390**	137,8×49×19,5							
1.6i Dream	96 → 98			ATE		[-]	**PF0390**	137,8×49×19,5							
1.6i 16V	96 →	74		LG		[-]	**PF0389**	119×69,5×16	OK032						
1.6i SW	99 →	55		ATE		[-]	**PF0391**	137,8×49×15							
1.6i SW	99 →	74		LG		[-]	**PF0389**	119×69,5×16	OK032						
1.7 Sdi	95 → 98			ATE		[-]	**PF0390**	137,8×49×19,5							

		KW	CV	SiS	i	W.i.	MAGNETI MARELLI	W×H×Th (mm)	Extra kit [Opt]	SiS	i	W.i.	MAGNETI MARELLI	W×H×Th (mm)	Extra kit [Opt]
SEAT															
Cordoba I															
1.8i CLX/GLX	93→95			KH		[-]	**PF0392**	138×49×19,5							
1.8i 16V Gt	93→95			LG		[-]	**PF0806**	119×69,7×16	OK030	LG		[-]	**PF0144**	87×53×15	OK039
1.8i	93→96			KH		[-]	**PF0392**	138×49×19,5							
1.9 D	93→96			KH		[-]	**PF0392**	138×49×19,5							
1.9 D SW	99→			ATE		[-]	**PF0391**	137,8×49×15							
1.9 TD	93→96			KH		[-]	**PF0392**	138×49×19,5							
1.9 Sdi	95→			ATE		[-]	**PF0390**	137,8×49×19,5							
1.9 TDI	96→	66		LG		[-]	**PF0389**	119×69,5×16	OK032						
1.9 TDI SW	96→	66		LG		[-]	**PF0389**	119×69,5×16	OK032						
1.9 TDI	96→	81		LG		[-]	**PF0389**	119×69,5×16	OK032	LG		[-]	**PF0144**	87×53×15	OK039
2.0 Gti	96→00			LG		[-]	**PF0806**	119×69,7×16	OK030	LG		[-]	**PF0144**	87×53×15	OK039
2.0 Gti 16V	96→00			LG		[-]	**PF0806**	119×69,7×16	OK030	LG		[-]	**PF0144**	87×53×15	OK039
Cordoba II (6L2)															
1.2	10/02→06/06	47	64	ATE		[+]	**PF0516**	146×54,7×19,5		LG		[-]	**PF0131**	87×53×17	OK039/ OK041
1.2 12V	05/06→11/09	51	70	ATE		[+]	**PF0516**	146×54,7×19,5		LG		[-]	**PF0131**	87×53×17	OK039/ OK041
1.4 16V	10/02→09			ATE		[+]	**PF0516**	146×54,7×19,5		LG		[-]	**PF0131**	87×53×17	OK039/ OK041
1.4 16V	10/02→09			LG		[+]	**PF0576**	131,5×62,7×18,8	OK033/ OK077	LG		[-]	**PF0131**	87×53×17	OK039/ OK041
1.4 TDI	10/02→09			KH		[+]	**PF0516**	146×54,7×19,5		LG		[-]	**PF0131**	87×53×17	OK039/ OK041
1.4 TDI	10/02→09			LG		[+]	**PF0576**	131,5×62,7×18,8	OK033/ OK077	LG		[-]	**PF0131**	87×53×17	OK039/ OK041
1.6	04/03→11/09	74	101	ATE		[+]	**PF0516**	146×54,7×19,5		LG		[-]	**PF0131**	87×53×17	OK039/ OK041
1.6	04/03→11/09	74	101	LG		[+]	**PF0576**	131,5×62,7×18,8	OK033/ OK077	LG		[-]	**PF0131**	87×53×17	OK039/ OK041
1.6 16V	11/06→11/09	77	105	ATE		[+]	**PF0516**	146×54,7×19,5		LG		[-]	**PF0131**	87×53×17	OK039/ OK041
1.6 16V	11/06→11/09	77	105	LG		[+]	**PF0576**	131,5×62,7×18,8	OK033/ OK077	LG		[-]	**PF0131**	87×53×17	OK039/ OK041
1.9 TDI	10/02→	96	131	ATE		[+]	**PF0516**	146×54,7×19,5		LG		[-]	**PF0131**	87×53×17	OK039/ OK041
1.9 TDI	10/02→	96	131	LG		[+]	**PF0576**	131,5×62,7×18,8	OK033/ OK077	LG		[-]	**PF0131**	87×53×17	OK039/ OK041
1.9 TDI	09/02→	74	100	ATE		[+]	**PF0516**	146×54,7×19,5		LG		[-]	**PF0131**	87×53×17	OK039/ OK041
1.9 TDI	09/02→	74	100	LG		[+]	**PF0576**	131,5×62,7×18,8	OK033/ OK077	LG		[-]	**PF0131**	87×53×17	OK039/ OK041
1.9 Sdi	10/02→09			ATE		[+]	**PF0516**	146×54,7×19,5		LG		[-]	**PF0131**	87×53×17	OK039/ OK041

		KW	CV												
				SiS	i	W.i.	MAGNETI MARELLI	W×H×Th (mm)	Extra kit [Opt]	SiS	i	W.i.	MAGNETI MARELLI	W×H×Th (mm)	Extra kit [Opt]
SEAT															
Cordoba II (6L2)															
1.9 SDI	09/02 →	47	64	LG		[+]	**PF0576**	131,5×62,7×18,8	OK033/ OK077	LG		[-]	**PF0131**	87×53×17	OK039/ OK041
2.0	09/02 → 11/09	85	115	LG		[+]	**PF0576**	131,5×62,7×18,8	OK033/ OK077	LG		[-]	**PF0131**	87×53×17	OK039/ OK041
Cordoba Vario															
1.4	96 →			ATE		[-]	**PF0390**	137,8×49×19,5							
1.6	96 →			ATE		[-]	**PF0390**	137,8×49×19,5							
1.7 sdi	96 →			ATE		[-]	**PF0390**	137,8×49×19,5							
1.9 sdi	96 →			ATE		[-]	**PF0391**	137,8×49×15							
1.9 TDI	96 →			ATE		[-]	**PF0391**	137,8×49×15							
Exeo (3R2)															
1.6	03/09 →	75	102	ATE		[+]	**PF0142**	156,4×74,2×19,5		LG		[-]	**PF0144**	87×53×15	OK039
1.8 T	12/08 →	110	150	ATE		[+]	**PF0142**	156,4×74,2×19,5		LG		[-]	**PF0144**	87×53×15	OK039
1.8 TSI	09/10 →	88	120	ATE		[+]	**PF0142**	156,4×74,2×19,5		LG		[-]	**PF0144**	87×53×15	OK039
1.8 TSI	05/10 →	118	160	ATE		[+]	**PF0142**	156,4×74,2×19,5		LG		[-]	**PF0144**	87×53×15	OK039
2.0 TDI	03/09 →	105	143	ATE		[+]	**PF0142**	156,4×74,2×19,5		LG		[-]	**PF0144**	87×53×15	OK039
2.0 TDI	03/09 →	125	170	ATE		[+]	**PF0142**	156,4×74,2×19,5		LG		[-]	**PF0144**	87×53×15	OK039
2.0 TDI	12/08 →	88	120	ATE		[+]	**PF0142**	156,4×74,2×19,5		LG		[-]	**PF0144**	87×53×15	OK039
2.0 TFSI	03/09 →	147	200	ATE		[+]	**PF0142**	156,4×74,2×19,5		LG		[-]	**PF0144**	87×53×15	OK039
2.0 TFSI	05/10 →	155	211	ATE		[+]	**PF0142**	156,4×74,2×19,5		LG		[-]	**PF0144**	87×53×15	OK039
Exeo ST (3R5)															
1.6	06/09 →	75	102	ATE		[+]	**PF0142**	156,4×74,2×19,5		LG		[-]	**PF0144**	87×53×15	OK039
1.8 T	06/09 →	110	150	ATE		[+]	**PF0142**	156,4×74,2×19,5		LG		[-]	**PF0144**	87×53×15	OK039
1.8 TSI	09/10 →	88	120	ATE		[+]	**PF0142**	156,4×74,2×19,5		LG		[-]	**PF0144**	87×53×15	OK039
1.8 TSI	05/10 →	118	160	ATE		[+]	**PF0142**	156,4×74,2×19,5		LG		[-]	**PF0144**	87×53×15	OK039
2.0 TDI	06/09 →	105	143	ATE		[+]	**PF0142**	156,4×74,2×19,5		LG		[-]	**PF0144**	87×53×15	OK039
2.0 TDI	06/09 →	125	170	ATE		[+]	**PF0142**	156,4×74,2×19,5		LG		[-]	**PF0144**	87×53×15	OK039
2.0 TDI	08/09 →	88	120	ATE		[+]	**PF0142**	156,4×74,2×19,5		LG		[-]	**PF0144**	87×53×15	OK039
2.0 TFSI	06/09 →	147	200	ATE		[+]	**PF0142**	156,4×74,2×19,5		LG		[-]	**PF0144**	87×53×15	OK039
2.0 TFSI	05/10 →	155	211	ATE		[+]	**PF0142**	156,4×74,2×19,5		LG		[-]	**PF0144**	87×53×15	OK039
Fura															
L - GL	82 →			BD		[+]	**PF0212**	108,8×47,4×18	OK028						
Ibiza I (021A)															
0.9	08/86 → 05/93	32	44	BD		[+]	**PF0212**	108,8×47,4×18	OK028						
0.9	08/90 → 05/93	29	40	BD		[+]	**PF0212**	108,8×47,4×18	OK028						
1.2	11/84 → 12/93	44	60	BD		[+]	**PF0212**	108,8×47,4×18	OK028						
1.2	11/84 → 12/93	47	64	BD		[+]	**PF0212**	108,8×47,4×18	OK028						
1.2 i	01/89 → 05/93	52	71	BD		[+]	**PF0212**	108,8×47,4×18	OK028						
1.5	11/84 → 05/93	63	85	BD		[+]	**PF0212**	108,8×47,4×18	OK028						
1.5 i	10/86 → 05/93	74	100	BD		[+]	**PF0212**	108,8×47,4×18	OK028						
1.5 i	10/86 → 05/93	65	89	BD		[+]	**PF0212**	108,8×47,4×18	OK028						
1.5 i CAT	10/86 → 05/93	66	90	BD		[+]	**PF0212**	108,8×47,4×18	OK028						
1.7	01/91 → 05/93	76	103	BD		[+]	**PF0212**	108,8×47,4×18	OK028						
1.7	01/91 → 05/93	72	98	BD		[+]	**PF0212**	108,8×47,4×18	OK028						

		KW	CV													
				SiS	i	W.i.	MAGNETI MARELLI	W×H×Th (mm)	Extra kit [Opt]	SiS	i	W.i.	MAGNETI MARELLI	W×H×Th (mm)	Extra kit [Opt]
SEAT															
Ibiza I (021A)															
1.7 D	06/84 → 05/93	40	54	BD		[+]	**PF0212**	108,8×47,4×18	OK028						
1.7 D	08/90 → 05/93	42	57	BD		[+]	**PF0212**	108,8×47,4×18	OK028						
Ibiza II (6K1)															
1.0	03/93 → 09/96	33	45	KH		[-]	**PF0395**	138×51,2×17,2							
1.0 i	09/96 → 08/99	37	50	KH		[-]	**PF0395**	138×51,2×17,2							
1.3 i	03/93 → 08/99	40	54	KH		[-]	**PF0395**	138×51,2×17,2							
1.4	12/97 → 04/99	40	54	KH		[-]	**PF0395**	138×51,2×17,2							
1.4 i	09/93 → 08/99	44	60	KH		[-]	**PF0395**	138×51,2×17,2							
1.4 i 16V	09/96 → 08/99	74	101	KH		[-]	**PF0395**	138×51,2×17,2							
1.6 i	03/93 → 08/99	55	75	KH		[-]	**PF0392**	138×49×19,5							
1.6 i	04/96 → 08/99	74	101	KH		[-]	**PF0392**	138×49×19,5							
1.6 i	09/94 → 06/99	55	75	KH		[-]	**PF0392**	138×49×19,5							
1.7 SDI	07/97 → 08/99	44	60	KH		[-]	**PF0392**	138×49×19,5							
1.8 i	03/93 → 08/99	66	90	KH		[-]	**PF0392**	138×49×19,5							
1.8 i 16V	11/93 → 08/96	95	129							LG		[-]	**PF0144**	87×53×15	OK039
1.9 D	10/94 → 08/96	50	68	KH		[-]	**PF0392**	138×49×19,5							
1.9 D	04/93 → 08/96	47	64	KH		[-]	**PF0392**	138×49×19,5							
1.9 SDI	08/96 → 08/99	47	64	KH		[-]	**PF0392**	138×49×19,5							
1.9 TD	03/93 → 08/96	55	75	KH		[-]	**PF0392**	138×49×19,5							
1.9 TDI	08/96 → 08/99	66	90	KH		[-]	**PF0392**	138×49×19,5							
1.9 TDI	02/97 → 08/99	81	110	KH		[-]	**PF0392**	138×49×19,5							
2.0 i	03/93 → 08/99	85	115	KH		[-]	**PF0392**	138×49×19,5							
2.0 i 16V	08/96 → 08/99	110	150							LG		[-]	**PF0144**	87×53×15	OK039
Ibiza III (6K1)															
1.0	08/99 → 02/02	37	50	ATE		[-]	**PF0391**	137,8×49×15							
1.0	06/00 → 02/02	50	68	ATE		[-]	**PF0391**	137,8×49×15							
1.0 16V	10/99 → 02/02	51	69	ATE		[-]	**PF0391**	137,8×49×15							
1.4	08/99 → 02/02	44	60	ATE		[-]	**PF0391**	137,8×49×15							
1.4 16V	05/00 → 02/02	55	75	ATE		[-]	**PF0391**	137,8×49×15							
1.4 16V	08/99 → 02/02	74	100	ATE		[-]	**PF0391**	137,8×49×15							
1.6	08/99 → 02/02	55	75	ATE		[-]	**PF0391**	137,8×49×15							
1.6	08/99 → 02/02	74	101	LG		[-]	**PF0389**	119×69,5×16	OK032						
1.9 D	99 →			ATE		[-]	**PF0391**	137,8×49×15							
1.9 SDI	08/99 → 02/02	50	68	LG		[-]	**PF0389**	119×69,5×16	OK032	LG		[-]	**PF0131**	87×53×17	OK039/ OK041
1.9 TDI	08/99 → 02/02	66	90	LG		[-]	**PF0389**	119×69,5×16	OK032						
1.9 TDI	08/99 → 02/02	81	110	LG		[-]	**PF0389**	119×69,5×16	OK032	LG		[+]	**PF0442**	87×53×17	OK039
Ibiza IV (6L1)															
1.2	02/02 → 06/06	47	64	ATE		[+]	**PF0516**	146×54,7×19,5		LG		[+]	**PF0442**	87×53×17	OK039
1.2	02/02 → 06/06	47	64	LG		[+]	**PF0576**	131,5×62,7×18,8	OK033/ OK077	LG		[+]	**PF0442**	87×53×17	OK039
1.2	06/07 → 05/08	44	60	ATE		[+]	**PF0516**	146×54,7×19,5		LG		[+]	**PF0442**	87×53×17	OK039
1.2	06/07 → 05/08	44	60	LG		[+]	**PF0576**	131,5×62,7×18,8	OK033/ OK077	LG		[+]	**PF0442**	87×53×17	OK039

		KW	CV	SiS	i	W.i.	MAGNETI MARELLI	W×H×Th (mm)	Extra kit [Opt]	SiS	i	W.i.	MAGNETI MARELLI	W×H×Th (mm)	Extra kit [Opt]
SEAT															
Ibiza IV (6L1)															
1.2 12V	05/06 →	51	70	ATE		[+]	**PF0516**	146×54,7×19,5		LG		[+]	**PF0442**	87×53×17	OK039
1.2 12V	05/06 →	51	70	LG		[+]	**PF0576**	131,5×62,7×18,8	OK033/ OK077	LG		[+]	**PF0442**	87×53×17	OK039
1.4 16V	02/02 →	74	100	ATE		[+]	**PF0516**	146×54,7×19,5		LG		[+]	**PF0442**	87×53×17	OK039
1.4 16V	02/02 →	74	100	LG		[+]	**PF0576**	131,5×62,7×18,8	OK033/ OK077	LG		[+]	**PF0442**	87×53×17	OK039
1.4 16V	02/02 → 12/07	55	75	ATE		[+]	**PF0516**	146×54,7×19,5		LG		[+]	**PF0442**	87×53×17	OK039
1.4 16V	02/02 → 12/07	55	75	LG		[+]	**PF0576**	131,5×62,7×18,8	OK033/ OK077	LG		[+]	**PF0442**	87×53×17	OK039
1.4 16V	05/06 →	63	86	ATE		[+]	**PF0516**	146×54,7×19,5		LG		[+]	**PF0442**	87×53×17	OK039
1.4 16V	05/06 →	63	86	LG		[+]	**PF0576**	131,5×62,7×18,8	OK033/ OK077	LG		[+]	**PF0442**	87×53×17	OK039
1.4 TDI	05/02 → 12/05	55	75	ATE		[+]	**PF0516**	146×54,7×19,5		LG		[+]	**PF0442**	87×53×17	OK039
1.4 TDI	05/02 → 12/05	55	75	LG		[+]	**PF0576**	131,5×62,7×18,8	OK033/ OK077	LG		[+]	**PF0442**	87×53×17	OK039
1.4 TDI	05/05 →	51	70	ATE		[+]	**PF0516**	146×54,7×19,5		LG		[+]	**PF0442**	87×53×17	OK039
1.4 TDI	05/05 →	51	70	LG		[+]	**PF0576**	131,5×62,7×18,8	OK033/ OK077	LG		[+]	**PF0442**	87×53×17	OK039
1.4 TDI	06/05 →	59	80	ATE		[+]	**PF0516**	146×54,7×19,5		LG		[+]	**PF0442**	87×53×17	OK039
1.4 TDI	06/05 →	59	80	LG		[+]	**PF0576**	131,5×62,7×18,8	OK033/ OK077	LG		[+]	**PF0442**	87×53×17	OK039
1.6	02/03 →	74	101	ATE		[+]	**PF0516**	146×54,7×19,5		LG		[+]	**PF0442**	87×53×17	OK039
1.6	02/03 →	74	101	LG		[+]	**PF0576**	131,5×62,7×18,8	OK033/ OK077	LG		[+]	**PF0442**	87×53×17	OK039
1.6 16V	11/06 →	77	105	ATE		[+]	**PF0516**	146×54,7×19,5		LG		[+]	**PF0442**	87×53×17	OK039
1.6 16V	11/06 →	77	105	LG		[+]	**PF0576**	131,5×62,7×18,8	OK033/ OK077	LG		[+]	**PF0442**	87×53×17	OK039
1.8	05/04 →	132	179	ATE		[+]	**PF0516**	146×54,7×19,5		LG		[+]	**PF0442**	87×53×17	OK039
1.8	05/04 →	132	179	LG		[+]	**PF0576**	131,5×62,7×18,8	OK033/ OK077	LG		[+]	**PF0442**	87×53×17	OK039
1.8 T Cupra R	01/04 → 02/08	132	180	ATE		[+]	**PF0516**	146×54,7×19,5		LG		[+]	**PF0442**	87×53×17	OK039
1.8 T Cupra R	01/04 → 02/08	132	180	LG		[+]	**PF0576**	131,5×62,7×18,8	OK033/ OK077	LG		[+]	**PF0442**	87×53×17	OK039
1.8 T FR	12/03 → 05/08	110	150	ATE		[+]	**PF0516**	146×54,7×19,5		LG		[+]	**PF0442**	87×53×17	OK039
1.8 T FR	12/03 → 05/08	110	150	LG		[+]	**PF0576**	131,5×62,7×18,8	OK033/ OK077	LG		[+]	**PF0442**	87×53×17	OK039
1.9 SDI	02/02 → 12/05	47	64	ATE		[+]	**PF0516**	146×54,7×19,5		LG		[+]	**PF0442**	87×53×17	OK039
1.9 SDI	02/02 → 12/05	47	64	LG		[+]	**PF0576**	131,5×62,7×18,8	OK033/ OK077	LG		[+]	**PF0442**	87×53×17	OK039
1.9 TDI	02/02 →	74	100	ATE		[+]	**PF0516**	146×54,7×19,5		LG		[+]	**PF0442**	87×53×17	OK039
1.9 TDI	02/02 →	74	100	LG		[+]	**PF0576**	131,5×62,7×18,8	OK033/ OK077	LG		[+]	**PF0442**	87×53×17	OK039
1.9 TDI	02/02 →	96	131	ATE		[+]	**PF0516**	146×54,7×19,5		LG		[+]	**PF0442**	87×53×17	OK039

		KW	CV	SiS	i	W.i.	MAGNETI MARELLI	W×H×Th (mm)	Extra kit [Opt]	SiS	i	W.i.	MAGNETI MARELLI	W×H×Th (mm)	Extra kit [Opt]
SEAT															
Ibiza IV (6L1)															
1.9 TDI	02/02→	96	131	LG		[+]	**PF0576**	131,5×62,7×18,8	OK033/ OK077	LG		[+]	**PF0442**	87×53×17	OK039
2.0	04/02→	85	116	ATE		[+]	**PF0516**	146×54,7×19,5		LG		[+]	**PF0442**	87×53×17	OK039
2.0	04/02→	85	116	LG		[+]	**PF0576**	131,5×62,7×18,8	OK033/ OK077	LG		[+]	**PF0442**	87×53×17	OK039
Ibiza IV Sportcoupé (6J1)															
1.2	07/08→			ATE		[-]	**PF0134**	146×54,7×19,5		LG		[-]	**PF0131**	87×53×17	OK039/ OK041
1.2	07/08→			ATE		[+]	**PF0132**	146×54,7×19,5		LG		[-]	**PF0131**	87×53×17	OK039/ OK041
1.2	07/08→			ATE		[+]	**PF0135**	155,1×66×20,1		LG		[-]	**PF0131**	87×53×17	OK039/ OK041
1.2 TSI	09/10→	77	105	ATE		[-]	**PF0134**	146×54,7×19,5		LG		[-]	**PF0131**	87×53×17	OK039/ OK041
1.2 TSI	09/10→	77	105	ATE		[+]	**PF0132**	146×54,7×19,5		LG		[-]	**PF0131**	87×53×17	OK039/ OK041
1.2 TSI	09/10→	77	105	ATE		[+]	**PF0135**	155,1×66×20,1		LG		[-]	**PF0131**	87×53×17	OK039/ OK041
1.2 TDI	05/10→	55	75	ATE		[-]	**PF0134**	146×54,7×19,5		LG		[-]	**PF0131**	87×53×17	OK039/ OK041
1.2 TDI	05/10→	55	75	ATE		[+]	**PF0132**	146×54,7×19,5		LG		[-]	**PF0131**	87×53×17	OK039/ OK041
1.2 TDI	05/10→	55	75	ATE		[+]	**PF0135**	155,1×66×20,1		LG		[-]	**PF0131**	87×53×17	OK039/ OK041
1.4	07/08→			ATE		[-]	**PF0134**	146×54,7×19,5		LG		[-]	**PF0131**	87×53×17	OK039/ OK041
1.4	07/08→			ATE		[+]	**PF0132**	146×54,7×19,5		LG		[-]	**PF0131**	87×53×17	OK039/ OK041
1.4	07/08→			ATE		[+]	**PF0135**	155,1×66×20,1		LG		[-]	**PF0131**	87×53×17	OK039/ OK041
1.4 TDI	07/08→			ATE		[-]	**PF0134**	146×54,7×19,5		LG		[-]	**PF0131**	87×53×17	OK039/ OK041
1.4 TDI	07/08→			ATE		[+]	**PF0132**	146×54,7×19,5		LG		[-]	**PF0131**	87×53×17	OK039/ OK041
1.4 TDI	07/08→			ATE		[+]	**PF0135**	155,1×66×20,1		LG		[-]	**PF0131**	87×53×17	OK039/ OK041
Ibiza V (6J5)															
1.2	07/08→			ATE		[-]	**PF0134**	146×54,7×19,5		LG		[-]	**PF0131**	87×53×17	OK039/ OK041
1.2	07/08→			ATE		[+]	**PF0132**	146×54,7×19,5		LG		[-]	**PF0131**	87×53×17	OK039/ OK041
1.2	07/08→			ATE		[+]	**PF0135**	155,1×66×20,1		LG		[-]	**PF0131**	87×53×17	OK039/ OK041

		KW	CV												
				SiS	i	W.i.	MAGNETI MARELLI	W×H×Th (mm)	Extra kit [Opt]	SiS	i	W.i.	MAGNETI MARELLI	W×H×Th (mm)	Extra kit [Opt]
SEAT															
Ibiza V (6J5)															
1.4	07/08→			ATE		[-]	**PF0134**	146×54,7×19,5		LG		[-]	**PF0131**	87×53×17	OK039/ OK041
1.4	07/08→			ATE		[+]	**PF0132**	146×54,7×19,5		LG		[-]	**PF0131**	87×53×17	OK039/ OK041
1.4	07/08→			ATE		[+]	**PF0135**	155,1×66×20,1		LG		[-]	**PF0131**	87×53×17	OK039/ OK041
1.4 TDI	07/08→			ATE		[-]	**PF0134**	146×54,7×19,5		LG		[-]	**PF0131**	87×53×17	OK039/ OK041
1.4 TDI	07/08→			ATE		[+]	**PF0132**	146×54,7×19,5		LG		[-]	**PF0131**	87×53×17	OK039/ OK041
1.4 TDI	07/08→			ATE		[+]	**PF0135**	155,1×66×20,1		LG		[-]	**PF0131**	87×53×17	OK039/ OK041
1.4 TSi	07/08→			ATE		[-]	**PF0134**	146×54,7×19,5		LG		[-]	**PF0131**	87×53×17	OK039/ OK041
1.4 TSi	07/08→			ATE		[+]	**PF0132**	146×54,7×19,5		LG		[-]	**PF0131**	87×53×17	OK039/ OK041
1.4 TSi	07/08→			ATE		[+]	**PF0135**	155,1×66×20,1		LG		[-]	**PF0131**	87×53×17	OK039/ OK041
1.4 TSI	10/13→	103	140	ATE		[-]	**PF0134**	146×54,7×19,5		LG		[-]	**PF0131**	87×53×17	OK039/ OK041
1.4 TSI	10/13→	103	140	ATE		[+]	**PF0132**	146×54,7×19,5		LG		[-]	**PF0131**	87×53×17	OK039/ OK041
1.4 TSI	10/13→	103	140	ATE		[+]	**PF0135**	155,1×66×20,1		LG		[-]	**PF0131**	87×53×17	OK039/ OK041
1.9 TDI	07/08→			ATE		[-]	**PF0134**	146×54,7×19,5		LG		[-]	**PF0131**	87×53×17	OK039/ OK041
1.9 TDI	07/08→			ATE		[+]	**PF0132**	146×54,7×19,5		LG		[-]	**PF0131**	87×53×17	OK039/ OK041
1.9 TDI	07/08→			ATE		[+]	**PF0135**	155,1×66×20,1		LG		[-]	**PF0131**	87×53×17	OK039/ OK041
Ibiza V SW (6J8)															
1.2	05/10→	44	60	ATE		[+]	**PF0132**	146×54,7×19,5		LG		[-]	**PF0131**	87×53×17	OK039/ OK041
1.2	05/10→	51	70	ATE		[+]	**PF0132**	146×54,7×19,5		LG		[-]	**PF0131**	87×53×17	OK039/ OK041
1.2 TDI	04/10→	55	75	ATE		[+]	**PF0132**	146×54,7×19,5		LG		[-]	**PF0131**	87×53×17	OK039/ OK041
1.2 TSI	09/12→	63	86	ATE		[+]	**PF0132**	146×54,7×19,5		LG		[-]	**PF0131**	87×53×17	OK039/ OK041
1.2 TSI	09/10→	77	105	ATE		[+]	**PF0132**	146×54,7×19,5		LG		[-]	**PF0131**	87×53×17	OK039/ OK041
1.4	03/10→	63	85	ATE		[+]	**PF0132**	146×54,7×19,5		LG		[-]	**PF0131**	87×53×17	OK039/ OK041

		KW	CV	SiS	i	W.i.	MAGNETI MARELLI	W×H×Th (mm)	Extra kit [Opt]	SiS	i	W.i.	MAGNETI MARELLI	W×H×Th (mm)	Extra kit [Opt]
SEAT															
Ibiza V SW (6J8)															
1.4 TSI	10/13→	103	140	ATE		[+]	**PF0132**	146×54,7×19,5		LG		[-]	**PF0131**	87×53×17	OK039/ OK041
1.4 TSI	02/12→	110	150	ATE		[+]	**PF0132**	146×54,7×19,5		LG		[-]	**PF0131**	87×53×17	OK039/ OK041
1.6	02/12→	77	105	ATE		[+]	**PF0132**	146×54,7×19,5		LG		[-]	**PF0131**	87×53×17	OK039/ OK041
1.6 TDI	03/10→	66	90	ATE		[+]	**PF0132**	146×54,7×19,5		LG		[-]	**PF0131**	87×53×17	OK039/ OK041
1.6 TDI	03/10→	77	105	ATE		[+]	**PF0132**	146×54,7×19,5		LG		[-]	**PF0131**	87×53×17	OK039/ OK041
Ibiza V Sportcoupé (6J1)															
1.4 TSI	06/09→	110	150	ATE	PR:1LQ, 1LR, 1ZG	[-]	**PF0134**	146×54,7×19,5		LG		[-]	**PF0131**	87×53×17	OK039/ OK041
1.4 TSI	06/09→	110	150	ATE	PR:1LQ, 1LR, 1ZG	[+]	**PF0132**	146×54,7×19,5		LG		[-]	**PF0131**	87×53×17	OK039/ OK041
1.4 TSI	06/09→	110	150	ATE		[+]	**PF0135**	155,1×66×20,1		LG		[-]	**PF0131**	87×53×17	OK039/ OK041
1.4 TSI	06/09→	132	180	ATE	PR:1LQ, 1LR, 1ZG	[-]	**PF0134**	146×54,7×19,5		LG		[-]	**PF0131**	87×53×17	OK039/ OK041
1.4 TSI	06/09→	132	180	ATE	PR:1LQ, 1LR, 1ZG	[+]	**PF0132**	146×54,7×19,5		LG		[-]	**PF0131**	87×53×17	OK039/ OK041
1.4 TSI	06/09→	132	180	ATE		[+]	**PF0135**	155,1×66×20,1		LG		[-]	**PF0131**	87×53×17	OK039/ OK041
1.6	07/08→	77	105	ATE		[+]	**PF0132**	146×54,7×19,5		LG		[-]	**PF0131**	87×53×17	OK039/ OK041
1.9 TDI	07/08→			ATE	PR:1LQ, 1LR, 1ZG	[-]	**PF0134**	146×54,7×19,5		LG		[-]	**PF0131**	87×53×17	OK039/ OK041
1.9 TDI	07/08→			ATE	PR:1LQ, 1LR, 1ZG	[+]	**PF0132**	146×54,7×19,5		LG		[-]	**PF0131**	87×53×17	OK039/ OK041
1.9 TDI	07/08→			ATE		[+]	**PF0135**	155,1×66×20,1		LG		[-]	**PF0131**	87×53×17	OK039/ OK041
2.0	10/08→	85	115	ATE	PR:1LQ, 1LR, 1ZG	[-]	**PF0134**	146×54,7×19,5		LG		[-]	**PF0131**	87×53×17	OK039/ OK041
2.0	10/08→	85	115	ATE	PR:1LQ, 1LR, 1ZG	[+]	**PF0132**	146×54,7×19,5		LG		[-]	**PF0131**	87×53×17	OK039/ OK041
2.0	10/08→	85	115	ATE		[+]	**PF0135**	155,1×66×20,1		LG		[-]	**PF0131**	87×53×17	OK039/ OK041
2.0 TDI	01/10→	105	143	ATE	PR:1LQ, 1LR, 1ZG	[-]	**PF0134**	146×54,7×19,5		LG		[-]	**PF0131**	87×53×17	OK039/ OK041
2.0 TDI	01/10→	105	143	ATE	PR:1LQ, 1LR, 1ZG	[+]	**PF0132**	146×54,7×19,5		LG		[-]	**PF0131**	87×53×17	OK039/ OK041
2.0 TDI	01/10→	105	143	ATE		[+]	**PF0135**	155,1×66×20,1		LG		[-]	**PF0131**	87×53×17	OK039/ OK041

		KW	CV	SiS	i	W.i.	MAGNETI MARELLI	W×H×Th (mm)	Extra kit [Opt]	SiS	i	W.i.	MAGNETI MARELLI	W×H×Th (mm)	Extra kit [Opt]
SEAT															
Ibiza Cupra (6K1)															
1.8 T Cupra R	04→			BR		[+]	**PF0554**	109,7×69,3×15		LG		[+]	**PF0442**	87×53×17	OK039
1.8 T Cupra R	04→			BR		[-]	**PF0555**	109,7×69,3×15		LG		[+]	**PF0442**	87×53×17	OK039
1.8 T Cupra FR	04→			BR		[+]	**PF0554**	109,7×69,3×15		LG		[+]	**PF0442**	87×53×17	OK039
1.8 T Cupra FR	04→			BR		[-]	**PF0555**	109,7×69,3×15		LG		[+]	**PF0442**	87×53×17	OK039
1.9 TDI Cupra R	04→			BR		[+]	**PF0554**	109,7×69,3×15		LG		[+]	**PF0442**	87×53×17	OK039
1.9 TDI Cupra R	04→			BR		[-]	**PF0555**	109,7×69,3×15		LG		[+]	**PF0442**	87×53×17	OK039
2.0 16V GTi Cupra 2	96→			LG		[-]	**PF0555**	109,7×69,3×15		LG		[-]	**PF0131**	87×53×17	OK039/ OK041
Inca (6K9)															
1.4 16V	04/00→06/03	55	75	LG		[-]	**PF0389**	119×69,5×16	OK032						
1.4 i	11/95→06/03	44	60	LG		[-]	**PF0389**	119×69,5×16	OK032						
1.6	08/99→04/02	70	95	LG		[-]	**PF0389**	119×69,5×16	OK032						
1.6 i	11/95→05/98	55	75	LG		[-]	**PF0389**	119×69,5×16	OK032						
1.6 i	06/97→09/00	55	75	LG		[-]	**PF0389**	119×69,5×16	OK032						
1.7 D	09/96→06/03	42	57	LG		[-]	**PF0389**	119×69,5×16	OK032						
1.9 D	11/95→06/03	47	64	LG		[-]	**PF0389**	119×69,5×16	OK032						
1.9 SDI	11/95→06/03	47	64	LG		[-]	**PF0389**	119×69,5×16	OK032						
1.9 TDI	09/96→06/03	66	90	LG		[-]	**PF0389**	119×69,5×16	OK032						
Leon I (1M1)															
1.4i 16V	99→06			ATE		[-]	**PF0134**	146×54,7×19,5		LG		[-]	**PF0131**	87×53×17	OK039/ OK041
1.4i 16V	99→06			ATE		[+]	**PF0516**	146×54,7×19,5		LG		[-]	**PF0131**	87×53×17	OK039/ OK041
1.6i 16V	99→06			ATE		[-]	**PF0134**	146×54,7×19,5		LG		[-]	**PF0131**	87×53×17	OK039/ OK041
1.6i 16V	99→06			ATE		[+]	**PF0516**	146×54,7×19,5		LG		[-]	**PF0131**	87×53×17	OK039/ OK041
1.6i 16V	99→06			ATE		[-]	**PF0134**	146×54,7×19,5		LG		[-]	**PF0131**	87×53×17	OK039/ OK041
1.6i 16V	99→06			ATE		[+]	**PF0516**	146×54,7×19,5		LG		[-]	**PF0131**	87×53×17	OK039/ OK041
1.8i 20V	99→06			ATE		[-]	**PF0134**	146×54,7×19,5		LG		[-]	**PF0131**	87×53×17	OK039/ OK041
1.8i 20V	99→06			ATE		[+]	**PF0516**	146×54,7×19,5		LG		[-]	**PF0131**	87×53×17	OK039/ OK041
1.8i 20V T.	99→06			ATE		[-]	**PF0260**	156,4×74,2×19		LG		[-]	**PF0131**	87×53×17	OK039/ OK041
1.8i 20V T.	99→06			ATE		[+]	**PF0136**	156,4×74,2×19		LG		[-]	**PF0131**	87×53×17	OK039/ OK041
1.8i 20V T.	99→06			ATE		[-]	**PF0137**	156,4×74,2×19		LG		[-]	**PF0131**	87×53×17	OK039/ OK041
1.8i 20V T4	99→06			ATE		[-]	**PF0137**	156,4×74,2×19		LG		[-]	**PF0131**	87×53×17	OK039/ OK041

		KW	CV												
				SiS	i	W.i.	MAGNETI MARELLI	W×H×Th (mm)	Extra kit [Opt]	SiS	i	W.i.	MAGNETI MARELLI	W×H×Th (mm)	Extra kit [Opt]
SEAT															
Leon I (1M1)															
1.9 Sdi	99→06			ATE		[-]	**PF0134**	146×54,7×19,5		LG		[-]	**PF0131**	87×53×17	OK039/ OK041
1.9 Sdi	99→06			ATE		[+]	**PF0516**	146×54,7×19,5		LG		[-]	**PF0131**	87×53×17	OK039/ OK041
1.9 TDI	99→06			ATE		[-]	**PF0134**	146×54,7×19,5		LG		[-]	**PF0131**	87×53×17	OK039/ OK041
1.9 TDI	99→06			ATE		[+]	**PF0516**	146×54,7×19,5		LG		[-]	**PF0131**	87×53×17	OK039/ OK041
1.9 TDI	01→06		150	ATE		[+]	**PF0136**	156,4×74,2×19		LG		[-]	**PF0131**	87×53×17	OK039/ OK041
2.8	02/01→06			BR		[+]	**PF0136**	156,4×74,2×19		LG		[-]	**PF0131**	87×53×17	OK039/ OK041
Leon I Cupra															
Cupra 1.8 Ti	05/03→			BR		[+]	**PF0554**	109,7×69,3×15		LG		[-]	**PF0131**	87×53×17	OK039/ OK041
Cupra 1.9 TDI	05/03→			BD		[+]	**PF0554**	109,7×69,3×15		LG		[-]	**PF0131**	87×53×17	OK039/ OK041
Leon II (1P-1K)															
1.6	09/05→			ATE	(1P)	[+]	**PF0135**	155,1×66×20,1		LG		[-]	**PF0144**	87×53×15	OK039
1.6	09/05→			ATE	(1K)	[+]	**PF0132**	146×54,7×19,5		LG		[-]	**PF0144**	87×53×15	OK039
1.8	09/05→			ATE	(1P)	[+]	**PF0135**	155,1×66×20,1		LG		[-]	**PF0144**	87×53×15	OK039
1.8	09/05→			ATE	(1K)	[+]	**PF0132**	146×54,7×19,5		LG		[-]	**PF0144**	87×53×15	OK039
1.9 TDI	09/05→			ATE	(1P)	[+]	**PF0135**	155,1×66×20,1		LG		[-]	**PF0144**	87×53×15	OK039
1.9 TDI	09/05→			ATE	(1K)	[+]	**PF0132**	146×54,7×19,5		LG		[-]	**PF0144**	87×53×15	OK039
2.0 Fsi	09/05→			ATE	(1P)	[+]	**PF0135**	155,1×66×20,1		LG		[-]	**PF0144**	87×53×15	OK039
2.0 Fsi	09/05→			ATE	(1K)	[+]	**PF0132**	146×54,7×19,5		LG		[-]	**PF0144**	87×53×15	OK039
2.0 TDI	09/05→			ATE	(1P)	[+]	**PF0135**	155,1×66×20,1		LG		[-]	**PF0144**	87×53×15	OK039
2.0 TDI	09/05→			ATE	(1K)	[+]	**PF0132**	146×54,7×19,5		LG		[-]	**PF0144**	87×53×15	OK039
Leon III (5F)															
1.2 TSI	01/13→	63	86	LG		[+]	**PF0715**	160×64,5×20,3	OK088	ATE	Ø Disc 272×10	[-]	**PF0714**	123×61,2×16	
1.2 TSI	01/13→	63	86	LG		[o]	**PF0716**	160,2×64,5×20,3	OK088						
1.2 TSI	01/13→	77	105	LG		[+]	**PF0715**	160×64,5×20,3	OK088	ATE	Ø Disc 272×10	[-]	**PF0714**	123×61,2×16	
1.2 TSI	01/13→	77	105	LG		[o]	**PF0716**	160,2×64,5×20,3	OK088						
1.4 TGI	10/13→	81	110	LG		[+]	**PF0715**	160×64,5×20,3	OK088	ATE	Ø Disc 272×10	[-]	**PF0714**	123×61,2×16	
1.4 TGI	10/13→	81	110	LG		[o]	**PF0716**	160,2×64,5×20,3	OK088						
1.4 TSI	11/12→	90	122	LG		[+]	**PF0715**	160×64,5×20,3	OK088	ATE	Ø Disc 272×10	[-]	**PF0714**	123×61,2×16	
1.4 TSI	11/12→	90	122	LG		[o]	**PF0716**	160,2×64,5×20,3	OK088						
1.4 TSI	11/12→	103	140	LG		[+]	**PF0715**	160×64,5×20,3	OK088	ATE	Ø Disc 272×10	[-]	**PF0714**	123×61,2×16	
1.4 TSI	11/12→	103	140	LG		[o]	**PF0716**	160,2×64,5×20,3	OK088						

		KW	CV													
				SiS	i	W.i.	MAGNETI MARELLI	W×H×Th (mm)	Extra kit [Opt]	SiS	i	W.i.	MAGNETI MARELLI	W×H×Th (mm)	Extra kit [Opt]	
SEAT																
Leon III (5F)																
1.6 TDI	11/12→	66	90	LG		[+]	**PF0715**	160×64,5×20,3	OK088	ATE	Ø Disc 272×10	[-]	**PF0714**	123×61,2×16		
1.6 TDI	11/12→	66	90	LG		[o]	**PF0716**	160,2×64,5×20,3	OK088							
1.6 TDI	11/12→	77	105	LG		[+]	**PF0715**	160×64,5×20,3	OK088	ATE	Ø Disc 272×10	[-]	**PF0714**	123×61,2×16		
1.6 TDI	11/12→	77	105	LG		[o]	**PF0716**	160,2×64,5×20,3	OK088							
1.6 TDI	09/13→	81	110	LG		[+]	**PF0715**	160×64,5×20,3	OK088	ATE	Ø Disc 272×10	[-]	**PF0714**	123×61,2×16		
1.6 TDI	09/13→	81	110	LG		[o]	**PF0716**	160,2×64,5×20,3	OK088							
1.8 TFSI	01/13→	132	180	LG		[+]	**PF0715**	160×64,5×20,3	OK088	ATE	Ø Disc 272×10	[-]	**PF0714**	123×61,2×16		
1.8 TFSI	01/13→	132	180	LG		[o]	**PF0716**	160,2×64,5×20,3	OK088							
2.0 TDI	05/13→	81	110	LG		[+]	**PF0715**	160×64,5×20,3	OK088	ATE	Ø Disc 272×10	[-]	**PF0714**	123×61,2×16		
2.0 TDI	05/13→	81	110	LG		[o]	**PF0716**	160,2×64,5×20,3	OK088							
2.0 TDI	05/13→	105	143	LG		[+]	**PF0715**	160×64,5×20,3	OK088	ATE	Ø Disc 272×10	[-]	**PF0714**	123×61,2×16		
2.0 TDI	05/13→	105	143	LG		[o]	**PF0716**	160,2×64,5×20,3	OK088							
2.0 TDI	11/12→	110	150	LG		[+]	**PF0715**	160×64,5×20,3	OK088	ATE	Ø Disc 272×10	[-]	**PF0714**	123×61,2×16		
2.0 TDI	11/12→	110	150	LG		[o]	**PF0716**	160,2×64,5×20,3	OK088							
2.0 TDI	11/12→	135	184	LG		[+]	**PF0715**	160×64,5×20,3	OK088	ATE	Ø Disc 272×10	[-]	**PF0714**	123×61,2×16		
2.0 TDI	11/12→	135	184	LG		[o]	**PF0716**	160,2×64,5×20,3	OK088							
Leon SC (5F5)																
1.2 TSI	01/13→	63	86	LG		[+]	**PF0715**	160×64,5×20,3	OK088							
1.2 TSI	01/13→	63	86	LG		[o]	**PF0716**	160,2×64,5×20,3	OK088							
1.2 TSI	02/13→	77	105	LG		[+]	**PF0715**	160×64,5×20,3	OK088							
1.2 TSI	02/13→	77	105	LG		[o]	**PF0716**	160,2×64,5×20,3	OK088							
1.4 TSI	02/13→	90	122	LG		[+]	**PF0715**	160×64,5×20,3	OK088							
1.4 TSI	02/13→	90	122	LG		[o]	**PF0716**	160,2×64,5×20,3	OK088							
1.4 TSI	02/13→	103	140	LG		[+]	**PF0715**	160×64,5×20,3	OK088							
1.4 TSI	02/13→	103	140	LG		[o]	**PF0716**	160,2×64,5×20,3	OK088							
1.6 TDI	02/13→	66	90	LG		[+]	**PF0715**	160×64,5×20,3	OK088							
1.6 TDI	02/13→	66	90	LG		[o]	**PF0716**	160,2×64,5×20,3	OK088							
1.6 TDI	02/13→	77	105	LG		[+]	**PF0715**	160×64,5×20,3	OK088							
1.6 TDI	02/13→	77	105	LG		[o]	**PF0716**	160,2×64,5×20,3	OK088							
1.6 TDI	09/13→	81	110	LG		[+]	**PF0715**	160×64,5×20,3	OK088							
1.6 TDI	09/13→	81	110	LG		[o]	**PF0716**	160,2×64,5×20,3	OK088							
1.8 TFSI	02/13→	132	180	LG		[+]	**PF0715**	160×64,5×20,3	OK088							
1.8 TFSI	02/13→	132	180	LG		[o]	**PF0716**	160,2×64,5×20,3	OK088							
2.0 TDI	02/13→	81	110	LG		[+]	**PF0715**	160×64,5×20,3	OK088							
2.0 TDI	02/13→	81	110	LG		[o]	**PF0716**	160,2×64,5×20,3	OK088							
2.0 TDI	05/13→	105	143	LG		[+]	**PF0715**	160×64,5×20,3	OK088							

		KW	CV	SiS	i	W.i.	MAGNETI MARELLI	W×H×Th (mm)	Extra kit [Opt]	SiS	i	W.i.	MAGNETI MARELLI	W×H×Th (mm)	Extra kit [Opt]
SEAT															
Leon SC (5F5)															
2.0 TDI	05/13→	105	143	LG		[o]	**PF0716**	160,2×64,5×20,3	OK088						
2.0 TDI	02/13→	110	150	LG		[+]	**PF0715**	160×64,5×20,3	OK088						
2.0 TDI	02/13→	110	150	LG		[o]	**PF0716**	160,2×64,5×20,3	OK088						
2.0 TDI	03/13→	135	184	LG		[+]	**PF0715**	160×64,5×20,3	OK088						
2.0 TDI	03/13→	135	184	LG		[o]	**PF0716**	160,2×64,5×20,3	OK088						
Leon SW (5F8)															
1.2 TSI	11/13→	63	86	LG		[+]	**PF0715**	160×64,5×20,3	OK088						
1.2 TSI	11/13→	63	86	LG		[o]	**PF0716**	160,2×64,5×20,3	OK088						
1.2 TSI	08/13→	77	105	LG		[+]	**PF0715**	160×64,5×20,3	OK088						
1.2 TSI	08/13→	77	105	LG		[o]	**PF0716**	160,2×64,5×20,3	OK088						
1.4 TGI	10/13→	81	110	LG		[+]	**PF0715**	160×64,5×20,3	OK088						
1.4 TGI	10/13→	81	110	LG		[o]	**PF0716**	160,2×64,5×20,3	OK088						
1.4 TSI	10/13→	90	122	LG		[+]	**PF0715**	160×64,5×20,3	OK088						
1.4 TSI	10/13→	90	122	LG		[o]	**PF0716**	160,2×64,5×20,3	OK088						
1.4 TSI	10/13→	103	140	LG		[+]	**PF0715**	160×64,5×20,3	OK088						
1.4 TSI	10/13→	103	140	LG		[o]	**PF0716**	160,2×64,5×20,3	OK088						
1.6 TDI	11/13→	66	90	LG		[+]	**PF0715**	160×64,5×20,3	OK088						
1.6 TDI	11/13→	66	90	LG		[o]	**PF0716**	160,2×64,5×20,3	OK088						
1.6 TDI	10/13→	77	105	LG		[+]	**PF0715**	160×64,5×20,3	OK088						
1.6 TDI	10/13→	77	105	LG		[o]	**PF0716**	160,2×64,5×20,3	OK088						
1.6 TDI	09/13→	81	110	LG		[+]	**PF0715**	160×64,5×20,3	OK088						
1.6 TDI	09/13→	81	110	LG		[o]	**PF0716**	160,2×64,5×20,3	OK088						
1.8 TFSI	10/13→	132	180	LG		[+]	**PF0715**	160×64,5×20,3	OK088						
1.8 TFSI	10/13→	132	180	LG		[o]	**PF0716**	160,2×64,5×20,3	OK088						
2.0 TDI	11/13→	81	110	LG		[+]	**PF0715**	160×64,5×20,3	OK088						
2.0 TDI	11/13→	81	110	LG		[o]	**PF0716**	160,2×64,5×20,3	OK088						
2.0 TDI	10/13→	105	143	LG		[+]	**PF0715**	160×64,5×20,3	OK088						
2.0 TDI	10/13→	105	143	LG		[o]	**PF0716**	160,2×64,5×20,3	OK088						
2.0 TDI	10/13→	110	150	LG		[+]	**PF0715**	160×64,5×20,3	OK088						
2.0 TDI	10/13→	110	150	LG		[o]	**PF0716**	160,2×64,5×20,3	OK088						
2.0 TDI	08/13→	135	184	LG		[+]	**PF0715**	160×64,5×20,3	OK088						
2.0 TDI	08/13→	135	184	LG		[o]	**PF0716**	160,2×64,5×20,3	OK088						
Malaga															
1.2	84→93			BD		[+]	**PF0212**	108,8×47,4×18	OK028						
1.5	84→93			BD		[+]	**PF0212**	108,8×47,4×18	OK028						
1.5 Sxi	84→93			BD		[+]	**PF0212**	108,8×47,4×18	OK028						
1.7 D	84→93			BD		[+]	**PF0212**	108,8×47,4×18	OK028						
Marbella (28)															
0.8	08/86→12/93	25	34	BD		[+]	**PF0212**	108,8×47,4×18	OK028						
0.9	01/87→12/93	29	40	BD		[+]	**PF0212**	108,8×47,4×18	OK028						
0.9	07/97→10/98	32	44	BD		[+]	**PF0212**	108,8×47,4×18	OK028						
0.9 CAT	01/90→11/96	29	40	BD		[+]	**PF0212**	108,8×47,4×18	OK028						
0.9 CAT	11/96→10/98	30	41	BD		[+]	**PF0212**	108,8×47,4×18	OK028						

		KW	CV													
				SiS	i	W.i.	MAGNETI MARELLI	W×H×Th (mm)	Extra kit [Opt]	SiS	i	W.i.	MAGNETI MARELLI	W×H×Th (mm)	Extra kit [Opt]
SEAT																
Marbella Box (028A)																
0.8	01/87 → 12/93	25	34	BD		[+]	**PF0212**	108,8×47,4×18	OK028							
0.9	01/87 → 12/93	29	40	BD		[+]	**PF0212**	108,8×47,4×18	OK028							
0.9 CAT	01/87 → 12/93	29	40	BD		[+]	**PF0212**	108,8×47,4×18	OK028							
Mii (KF1)																
1.0 EcoFuel	11/12 →	50	68	ATE		[-]	**PF0134**	146×54,7×19,5								
1.0 EcoFuel	11/12 →	50	68	ATE		[+]	**PF0135**	155,1×66×20,1								
1.0	10/11 →	44	60	ATE		[-]	**PF0134**	146×54,7×19,5								
1.0	10/11 →	44	60	ATE		[+]	**PF0135**	155,1×66×20,1								
1.0	10/11 →	55	75	ATE		[-]	**PF0134**	146×54,7×19,5								
1.0	10/11 →	55	75	ATE		[+]	**PF0135**	155,1×66×20,1								
Ronda																
1.2	83 → 07/86			BD		[+]	**PF0212**	108,8×47,4×18	OK028							
1.5	85 → 07/86			BD		[+]	**PF0212**	108,8×47,4×18	OK028							
1.6	83 → 07/86			BD		[+]	**PF0212**	108,8×47,4×18	OK028							
1.7 D	83 → 07/86			BD		[+]	**PF0212**	108,8×47,4×18	OK028							
Terra (24)																
0.9	02/87 → 12/96	29	40	BD		[+]	**PF0212**	108,8×47,4×18	OK028							
0.9 CAT	02/92 → 12/94	29	40	BD		[+]	**PF0212**	108,8×47,4×18	OK028							
1.3 D	03/90 → 12/94	33	45	BD		[+]	**PF0212**	108,8×47,4×18	OK028							
1.4 D	10/90 → 12/95	35	48	BD		[+]	**PF0212**	108,8×47,4×18	OK028							
Terra Van (024A)																
0.9	01/87 → 12/95	29	40	BD		[+]	**PF0212**	108,8×47,4×18	OK028							
0.9 CAT	01/90 → 12/95	29	40	BD		[+]	**PF0212**	108,8×47,4×18	OK028							
1.3 D	03/90 → 02/92	33	45	BD		[+]	**PF0212**	108,8×47,4×18	OK028							
1.4 D	10/90 → 02/92	35	48	BD		[+]	**PF0212**	108,8×47,4×18	OK028							
Toledo I																
1.6i	91 → 95			KH		[-]	**PF0392**	138×49×19,5								
1.6i	95 → 99			ATE		[-]	**PF0390**	137,8×49×19,5								
1.6i	95 → 99			ATE		[-]	**PF0391**	137,8×49×15								
1.6i	95 → 99			LG	+ABS	[-]	**PF0389**	119×69,5×16	OK032	LG		[-]	**PF0144**	87×53×15	OK039
1.8i 16V Gt	91 → 99									LG		[-]	**PF0144**	87×53×15	OK039
1.8i	91 → 95			LG	+ABS	[-]	**PF0806**	119×69,7×16	OK030	LG		[-]	**PF0144**	87×53×15	OK039
1.8i	95 → 99			ATE		[-]	**PF0390**	137,8×49×19,5								
1.8i	95 → 99			ATE		[-]	**PF0391**	137,8×49×15								
1.8i	95 → 99			LG	+ABS	[-]	**PF0389**	119×69,5×16	OK032	LG		[-]	**PF0144**	87×53×15	OK039
1.9 D	91 → 95			LG	+ABS	[-]	**PF0806**	119×69,7×16	OK030	LG		[-]	**PF0144**	87×53×15	OK039
1.9 D	91 → 95			KH		[-]	**PF0392**	138×49×19,5								
1.9 TD	91 → 95			LG	+ABS	[-]	**PF0806**	119×69,7×16	OK030	LG		[-]	**PF0144**	87×53×15	OK039
1.9 TD	91 → 95			KH		[-]	**PF0392**	138×49×19,5								
1.9 D/TD/Sdi	95 → 99			ATE		[-]	**PF0390**	137,8×49×19,5								
1.9 D/TD/Sdi	95 → 99			ATE		[-]	**PF0391**	137,8×49×15								
1.9 D/TD/Sdi	95 → 99			ATE	+ABS	[-]	**PF0391**	137,8×49×15		LG		[-]	**PF0144**	87×53×15	OK039
1.9 TDI	95 → 99	66		ATE		[-]	**PF0391**	137,8×49×15								
1.9 TDI	95 → 99	66		LG	+ABS	[-]	**PF0389**	119×69,5×16	OK032							

		KW	CV														
				SiS	i	W.i.	MAGNETI MARELLI	W×H×Th (mm)	Extra kit [Opt]	SiS	i	W.i.	MAGNETI MARELLI	W×H×Th (mm)	Extra kit [Opt]
SEAT															
Toledo I															
1.9 TDI	96 → 99	81								LG		[-]	**PF0144**	87×53×15	OK039
20i Gt	91 → 99									LG		[-]	**PF0144**	87×53×15	OK039
20i 16V Gt	91 → 99									LG		[-]	**PF0144**	87×53×15	OK039
Toledo II (1M2)															
1.4 16V	07/99 → 05/06	55	75	ATE		[-]	**PF0134**	146×54,7×19,5		LG		[-]	**PF0131**	87×53×17	OK039/ OK041
1.4 16V	07/99 → 05/06	55	75	ATE		[+]	**PF0516**	146×54,7×19,5		LG		[-]	**PF0144**	87×53×15	OK039
1.6	04/99 → 09/00	74	100	ATE		[-]	**PF0134**	146×54,7×19,5		LG		[-]	**PF0131**	87×53×17	OK039/ OK041
1.6	04/99 → 09/00	74	100	ATE		[+]	**PF0516**	146×54,7×19,5		LG		[-]	**PF0144**	87×53×15	OK039
1.6	08/05 → 05/06	75	102	ATE		[-]	**PF0134**	146×54,7×19,5		LG		[-]	**PF0131**	87×53×17	OK039/ OK041
1.6	08/05 → 05/06	75	102	ATE		[+]	**PF0516**	146×54,7×19,5		LG		[-]	**PF0144**	87×53×15	OK039
1.6 16V	09/00 → 05/06	77	105	ATE		[-]	**PF0134**	146×54,7×19,5		LG		[-]	**PF0131**	87×53×17	OK039/ OK041
1.6 16V	09/00 → 05/06	77	105	ATE		[+]	**PF0516**	146×54,7×19,5		LG		[-]	**PF0144**	87×53×15	OK039
1.8 All-wheel Drive	05/01 → 04/04	132	179	ATE		[-]	**PF0134**	146×54,7×19,5		LG		[-]	**PF0131**	87×53×17	OK039/ OK041
1.8 All-wheel Drive	05/01 → 04/04	132	179	ATE		[+]	**PF0516**	146×54,7×19,5		LG		[-]	**PF0144**	87×53×15	OK039
1.8 All-wheel Drive	05/02 → 05/03	154	209	ATE		[-]	**PF0134**	146×54,7×19,5		LG		[-]	**PF0131**	87×53×17	OK039/ OK041
1.8 All-wheel Drive	05/02 → 05/03	154	209	ATE		[+]	**PF0516**	146×54,7×19,5		LG		[-]	**PF0144**	87×53×15	OK039
1.8 All-wheel Drive	05/03 → 10/05	165	224	ATE		[-]	**PF0134**	146×54,7×19,5		LG		[-]	**PF0131**	87×53×17	OK039/ OK041
1.8 All-wheel Drive	05/03 → 10/05	165	224	ATE		[+]	**PF0516**	146×54,7×19,5		LG		[-]	**PF0144**	87×53×15	OK039
1.8 20V	04/99 → 05/06	92	125	ATE		[-]	**PF0134**	146×54,7×19,5		LG		[-]	**PF0131**	87×53×17	OK039/ OK041
1.8 20V	04/99 → 05/06	92	125	ATE		[+]	**PF0516**	146×54,7×19,5		LG		[-]	**PF0144**	87×53×15	OK039
1.8 20VT	05/01 → 05/06	132	180	ATE		[-]	**PF0134**	146×54,7×19,5		LG		[-]	**PF0131**	87×53×17	OK039/ OK041
1.8 20VT	05/01 → 05/06	132	180	ATE		[+]	**PF0516**	146×54,7×19,5		LG		[-]	**PF0144**	87×53×15	OK039
1.9 SDI	11/99 → 06/04	50	68	ATE		[-]	**PF0134**	146×54,7×19,5		LG		[-]	**PF0131**	87×53×17	OK039/ OK041
1.9 SDI	11/99 → 06/04	50	68	ATE		[+]	**PF0516**	146×54,7×19,5		LG		[-]	**PF0144**	87×53×15	OK039
1.9 TDI	04/99 → 05/06	66	90	ATE		[-]	**PF0134**	146×54,7×19,5		LG		[-]	**PF0131**	87×53×17	OK039/ OK041
1.9 TDI	04/99 → 05/06	66	90	ATE		[+]	**PF0516**	146×54,7×19,5		LG		[-]	**PF0144**	87×53×15	OK039
1.9 TDI	04/99 → 05/06	81	110	ATE		[-]	**PF0134**	146×54,7×19,5		LG		[-]	**PF0131**	87×53×17	OK039/ OK041
1.9 TDI	04/99 → 05/06	81	110	ATE		[+]	**PF0516**	146×54,7×19,5		LG		[-]	**PF0144**	87×53×15	OK039

MAGNETI MARELLI

		KW	CV	SiS	i	W.i.	MAGNETI MARELLI	W×H×Th (mm)	Extra kit [Opt]	SiS	i	W.i.	MAGNETI MARELLI	W×H×Th (mm)	Extra kit [Opt]
SEAT															
Toledo II (1M2)															
1.9 TDI	10/00 → 05/06	110	150	ATE		[-]	**PF0134**	146×54,7×19,5		LG		[-]	**PF0131**	87×53×17	OK039/ OK041
1.9 TDI	10/00 → 05/06	110	150	ATE		[+]	**PF0516**	146×54,7×19,5		LG		[-]	**PF0144**	87×53×15	OK039
1.9 TDI	05/03 → 05/06	96	130	ATE		[-]	**PF0134**	146×54,7×19,5		LG		[-]	**PF0131**	87×53×17	OK039/ OK041
1.9 TDI	05/03 → 05/06	96	130	ATE		[+]	**PF0516**	146×54,7×19,5		LG		[-]	**PF0144**	87×53×15	OK039
1.9 TDi	08/05 → 05/06	74	101	ATE		[-]	**PF0134**	146×54,7×19,5		LG		[-]	**PF0131**	87×53×17	OK039/ OK041
1.9 TDi	08/05 → 05/06	74	101	ATE		[+]	**PF0516**	146×54,7×19,5		LG		[-]	**PF0144**	87×53×15	OK039
2.3 V5	04/99 → 05/01	110	150	ATE		[-]	**PF0137**	156,4×74,2×19		LG		[-]	**PF0131**	87×53×17	OK039/ OK041
2.3 V5	04/99 → 05/01	110	150	ATE		[-]	**PF0260**	156,4×74,2×19		LG		[-]	**PF0144**	87×53×15	OK039
2.3 V5 20V	05/01 → 05/06	125	170	ATE		[-]	**PF0137**	156,4×74,2×19		LG		[-]	**PF0131**	87×53×17	OK039/ OK041
2.3 V5 20V	05/01 → 05/06	125	170	ATE		[-]	**PF0260**	156,4×74,2×19		LG		[-]	**PF0144**	87×53×15	OK039
2.8	10/00 → 07/01	150	204	ATE		[-]	**PF0137**	156,4×74,2×19		LG		[-]	**PF0131**	87×53×17	OK039/ OK041
2.8	10/00 → 07/01	150	204	ATE		[-]	**PF0260**	156,4×74,2×19		LG		[-]	**PF0144**	87×53×15	OK039
2.8 4x4	05/02 → 04/04	150	204	ATE		[-]	**PF0137**	156,4×74,2×19		LG		[-]	**PF0131**	87×53×17	OK039/ OK041
2.8 4x4	05/02 → 04/04	150	204	ATE		[-]	**PF0260**	156,4×74,2×19		LG		[-]	**PF0144**	87×53×15	OK039
Toledo III (5P-1K)															
1.6	10/04 → 12			ATE	(5P)	[+]	**PF0135**	155,1×66×20,1		LG		[-]	**PF0601**	105,5×56×16,7	OK039/ OK085
1.6	10/04 → 12			ATE	(1K)	[+]	**PF0132**	146×54,7×19,5		LG		[-]	**PF0131**	87×53×17	OK039/ OK041
1.9 TDI	10/04 → 12			ATE	(5P)	[+]	**PF0135**	155,1×66×20,1		LG		[-]	**PF0601**	105,5×56×16,7	OK039/ OK085
1.9 TDI	10/04 → 12			ATE	(1K)	[+]	**PF0132**	146×54,7×19,5		LG		[-]	**PF0131**	87×53×17	OK039/ OK041
2.0 16V Fsi	10/04 → 12			ATE	(5P)	[+]	**PF0135**	155,1×66×20,1		LG		[-]	**PF0601**	105,5×56×16,7	OK039/ OK085
2.0 16V Fsi	10/04 → 12			ATE	(1K)	[+]	**PF0132**	146×54,7×19,5		LG		[-]	**PF0131**	87×53×17	OK039/ OK041
2.0 16V TDI	10/04 → 12			ATE	(5P)	[+]	**PF0135**	155,1×66×20,1		LG		[-]	**PF0601**	105,5×56×16,7	OK039/ OK085
2.0 16V TDI	10/04 → 12			ATE	(1K)	[+]	**PF0132**	146×54,7×19,5		LG		[-]	**PF0131**	87×53×17	OK039/ OK041
Toledo IV (KG3)															
1.2	07/12 →	55	75	ATE		[+]	**PF0132**	146×54,7×19,5		LG		[-]	**PF0131**	87×53×17	OK039/ OK041
1.2	07/12 →	55	75	ATE		[+]	**PF0135**	155,1×66×20,1		LG		[-]	**PF0131**	87×53×17	OK039/ OK041

		KW	CV	SiS	i	W.i.	MAGNETI MARELLI	W×H×Th (mm)	Extra kit [Opt]	SiS	i	W.i.	MAGNETI MARELLI	W×H×Th (mm)	Extra kit [Opt]
SEAT															
Toledo IV (KG3)															
1.2 TSI	07/12→	63	86	ATE		[+]	**PF0132**	146×54,7×19,5		LG		[-]	**PF0131**	87×53×17	OK039/ OK041
1.2 TSI	07/12→	63	86	ATE		[+]	**PF0135**	155,1×66×20,1		LG		[-]	**PF0131**	87×53×17	OK039/ OK041
1.2 TSI	07/12→	77	105	ATE		[+]	**PF0132**	146×54,7×19,5		LG		[-]	**PF0131**	87×53×17	OK039/ OK041
1.2 TSI	07/12→	77	105	ATE		[+]	**PF0135**	155,1×66×20,1		LG		[-]	**PF0131**	87×53×17	OK039/ OK041
1.4 TSI	07/12→	90	122	ATE		[+]	**PF0132**	146×54,7×19,5		LG		[-]	**PF0131**	87×53×17	OK039/ OK041
1.4 TSI	07/12→	90	122	ATE		[+]	**PF0135**	155,1×66×20,1		LG		[-]	**PF0131**	87×53×17	OK039/ OK041
1.6	07/13→	77	105	ATE		[+]	**PF0132**	146×54,7×19,5		LG		[-]	**PF0131**	87×53×17	OK039/ OK041
1.6	07/13→	77	105	ATE		[+]	**PF0135**	155,1×66×20,1		LG		[-]	**PF0131**	87×53×17	OK039/ OK041
1.6 TDI	06/13→	66	90	ATE		[+]	**PF0132**	146×54,7×19,5		LG		[-]	**PF0131**	87×53×17	OK039/ OK041
1.6 TDI	06/13→	66	90	ATE		[+]	**PF0135**	155,1×66×20,1		LG		[-]	**PF0131**	87×53×17	OK039/ OK041
1.6 TDI	07/12→	77	105	ATE		[+]	**PF0132**	146×54,7×19,5		LG		[-]	**PF0131**	87×53×17	OK039/ OK041
1.6 TDI	07/12→	77	105	ATE		[+]	**PF0135**	155,1×66×20,1		LG		[-]	**PF0131**	87×53×17	OK039/ OK041
SKODA															
Citigo															
1.0 CNG	11/12→	50	68	ATE		[-]	**PF0134**	146×54,7×19,5							
1.0 CNG	11/12→	50	68	ATE		[+]	**PF0135**	155,1×66×20,1							
1.0	10/11→	44	60	ATE		[-]	**PF0134**	146×54,7×19,5							
1.0	10/11→	44	60	ATE		[+]	**PF0135**	155,1×66×20,1							
1.0	10/11→	55	75	ATE		[-]	**PF0134**	146×54,7×19,5							
1.0	10/11→	55	75	ATE		[+]	**PF0135**	155,1×66×20,1							
Fabia I															
1.4i Classic/ Confort	99→	68		ATE		[-]	**PF0134**	146×54,7×19,5							
1.4i Classic/ Confort	99→	68		ATE		[+]	**PF0516**	146×54,7×19,5							
1.4i Classic	99→	60		ATE		[-]	**PF0134**	146×54,7×19,5		LG		[+]	**PF0442**	87×53×17	OK039
1.4i Classic	99→	60		ATE		[+]	**PF0516**	146×54,7×19,5		LG		[+]	**PF0442**	87×53×17	OK039
1.4i 16V Confort/ Elegance	99→			ATE		[-]	**PF0134**	146×54,7×19,5		LG		[-]	**PF0144**	87×53×15	OK039

		KW	CV												
				SiS	i	W.i.	MAGNETI MARELLI	W×H×Th (mm)	Extra kit [Opt]	SiS	i	W.i.	MAGNETI MARELLI	W×H×Th (mm)	Extra kit [Opt]
SKODA															
Fabia I															
1.4i 16V Confort/ Elegance	99→			ATE		[+]	**PF0516**	146×54,7×19,5		LG		[-]	**PF0144**	87×53×15	OK039
1.4i 16V Confort/ Elegance	99→			ATE		[+]	**PF0516**	146×54,7×19,5		LG		[+]	**PF0442**	87×53×17	OK039
1.9 sdi Confort/ Classic	99→			ATE		[-]	**PF0134**	146×54,7×19,5		LG		[+]	**PF0442**	87×53×17	OK039
1.9 TDI Confort/ Elegance	99→			ATE		[+]	**PF0516**	146×54,7×19,5		LG		[-]	**PF0144**	87×53×15	OK039
Fabia II (6Y2)															
1.0	12/99→08/02	37	50	ATE		[+]	**PF0396**	137,8×49×17							
1.2i	02→03/07			ATE		[+]	**PF0396**	137,8×49×17							
1.9 TDI RS	06/03→03/08	96	130	LG		[+]	**PF0576**	131,5×62,7×18,8	OK033/ OK077						
2.0i	00→01			LG		[-]	**PF0575**	131,5×62,7×18,8	OK033/ OK077	LG		[-]	**PF0131**	87×53×17	OK039/ OK041
2.0i	01→03/07			LG		[+]	**PF0576**	131,5×62,7×18,8	OK033/ OK077	LG		[-]	**PF0131**	87×53×17	OK039/ OK041
Fabia II SW (6Y)															
1.2	07/01→07		54	ATE		[+]	**PF0396**	137,8×49×17							
1.2	07/01→07		54	ATE		[+]	**PF0132**	146×54,7×19,5							
1.2	07/01→07		54	ATE		[-]	**PF0388**	137,8×49×17							
1.2	01/03→07		64	ATE		[+]	**PF0396**	137,8×49×17							
1.2	01/03→07		64	ATE		[+]	**PF0132**	146×54,7×19,5							
1.2	01/03→07		64	ATE		[-]	**PF0388**	137,8×49×17							
1.4	04/00→07/01			ATE		[+]	**PF0396**	137,8×49×17							
1.4	04/00→07/01			ATE		[+]	**PF0132**	146×54,7×19,5							
1.4	04/00→07/01			ATE		[-]	**PF0388**	137,8×49×17							
1.4 16V	07/01→07			ATE		[+]	**PF0396**	137,8×49×17							
1.4 16V	07/01→07			ATE		[+]	**PF0132**	146×54,7×19,5							
1.4 16V	07/01→07			ATE		[-]	**PF0388**	137,8×49×17							
1.4 TDI	04/03→07			ATE		[+]	**PF0396**	137,8×49×17							
1.4 TDI	04/03→07			ATE		[+]	**PF0132**	146×54,7×19,5							
1.4 TDI	04/03→07			ATE		[-]	**PF0388**	137,8×49×17							
1.9 Sdi	07/01→07			ATE		[+]	**PF0396**	137,8×49×17							
1.9 Sdi	07/01→07			ATE		[+]	**PF0132**	146×54,7×19,5							
1.9 Sdi	07/01→07			ATE		[-]	**PF0388**	137,8×49×17							
1.9 TDI	07/01→07			ATE		[+]	**PF0396**	137,8×49×17							
1.9 TDI	07/01→07			ATE		[+]	**PF0132**	146×54,7×19,5							
1.9 TDI	07/01→07			ATE		[-]	**PF0388**	137,8×49×17							
2.0	07/01→07			ATE		[+]	**PF0396**	137,8×49×17							
2.0	07/01→07			ATE		[+]	**PF0132**	146×54,7×19,5							
2.0	07/01→07			ATE		[-]	**PF0388**	137,8×49×17							

		KW	CV	SiS	i	W.i.	MAGNETI MARELLI	W×H×Th (mm)	Extra kit [Opt]	SiS	i	W.i.	MAGNETI MARELLI	W×H×Th (mm)	Extra kit [Opt]
SKODA															
Fabia Praktik															
1.2	01/03 → 12/07	47	64	ATE		[+]	**PF0396**	137,8×49×17							
1.2	07/01 → 12/07	40	54	ATE		[+]	**PF0132**	146×54,7×19,5							
1.4	07/01 → 12/07	50	68	ATE		[+]	**PF0132**	146×54,7×19,5							
1.4 TDI	10/05 → 12/07	51	70	ATE		[+]	**PF0132**	146×54,7×19,5							
1.9 SDI	07/01 → 12/07	47	64	ATE		[+]	**PF0396**	137,8×49×17							
Fabia III															
1.2	12/06 →	44	60	LG		[+]	**PF0576**	131,5×62,7×18,8	OK033/ OK077	LG		[-]	**PF0131**	87×53×17	OK039/ OK041
1.2	12/06 →	44	60	ATE		[+]	**PF0132**	146×54,7×19,5		LG		[-]	**PF0131**	87×53×17	OK039/ OK041
1.2	01/07 →	51	70	LG		[+]	**PF0576**	131,5×62,7×18,8	OK033/ OK077	LG		[-]	**PF0131**	87×53×17	OK039/ OK041
1.2	01/07 →	51	70	ATE		[+]	**PF0132**	146×54,7×19,5		LG		[-]	**PF0131**	87×53×17	OK039/ OK041
1.2 12V	11 →	55	75	LG		[+]	**PF0576**	131,5×62,7×18,8	OK033/ OK077	LG		[-]	**PF0131**	87×53×17	OK039/ OK041
1.2 12V	11 →	55	75	ATE		[+]	**PF0132**	146×54,7×19,5		LG		[-]	**PF0131**	87×53×17	OK039/ OK041
1.2 16V	11/11 →	44	60	LG		[+]	**PF0576**	131,5×62,7×18,8	OK033/ OK077	LG		[-]	**PF0131**	87×53×17	OK039/ OK041
1.2 16V	11/11 →	44	60	ATE		[+]	**PF0132**	146×54,7×19,5		LG		[-]	**PF0131**	87×53×17	OK039/ OK041
1.2 TDI	05/10 →	55	75	LG		[+]	**PF0576**	131,5×62,7×18,8	OK033/ OK077	LG		[-]	**PF0131**	87×53×17	OK039/ OK041
1.2 TDI	05/10 →	55	75	ATE		[+]	**PF0132**	146×54,7×19,5		LG		[-]	**PF0131**	87×53×17	OK039/ OK041
1.2 TSI	03/10 →	77	105	LG		[+]	**PF0576**	131,5×62,7×18,8	OK033/ OK077	LG		[-]	**PF0131**	87×53×17	OK039/ OK041
1.2 TSI	03/10 →	77	105	ATE		[+]	**PF0132**	146×54,7×19,5		LG		[-]	**PF0131**	87×53×17	OK039/ OK041
1.2 TSI	03/10 →	63	86	LG		[+]	**PF0576**	131,5×62,7×18,8	OK033/ OK077	LG		[-]	**PF0131**	87×53×17	OK039/ OK041
1.2 TSI	03/10 →	63	86	ATE		[+]	**PF0132**	146×54,7×19,5		LG		[-]	**PF0131**	87×53×17	OK039/ OK041
1.4	01/07 →	63	86	LG		[+]	**PF0576**	131,5×62,7×18,8	OK033/ OK077	LG		[-]	**PF0131**	87×53×17	OK039/ OK041
1.4	01/07 →	63	86	ATE		[+]	**PF0132**	146×54,7×19,5		LG		[-]	**PF0131**	87×53×17	OK039/ OK041
1.4 TDI	02/07 →	51	70	LG		[+]	**PF0576**	131,5×62,7×18,8	OK033/ OK077	LG		[-]	**PF0131**	87×53×17	OK039/ OK041
1.4 TDI	02/07 →	51	70	ATE		[+]	**PF0132**	146×54,7×19,5		LG		[-]	**PF0131**	87×53×17	OK039/ OK041
1.4 TDI	01/07 →	59	80	LG		[+]	**PF0576**	131,5×62,7×18,8	OK033/ OK077	LG		[-]	**PF0131**	87×53×17	OK039/ OK041

		KW	CV													
				SiS	i	W.i.	MAGNETI MARELLI	W×H×Th (mm)	Extra kit [Opt]	SiS	i	W.i.	MAGNETI MARELLI	W×H×Th (mm)	Extra kit [Opt]
SKODA															
Fabia III															
1.4 TDI	01/07→	59	80	ATE		[+]	**PF0132**	146×54,7×19,5		LG		[-]	**PF0131**	87×53×17	OK039/ OK041
1.4 TSI	05/10→	132	180	LG		[+]	**PF0576**	131,5×62,7×18,8	OK033/ OK077	LG		[-]	**PF0131**	87×53×17	OK039/ OK041
1.4 TSI	05/10→	132	180	ATE		[+]	**PF0132**	146×54,7×19,5		LG		[-]	**PF0131**	87×53×17	OK039/ OK041
1.6	04/07→	77	105	LG		[+]	**PF0576**	131,5×62,7×18,8	OK033/ OK077	LG		[-]	**PF0131**	87×53×17	OK039/ OK041
1.6	04/07→	77	105	ATE		[+]	**PF0132**	146×54,7×19,5		LG		[-]	**PF0131**	87×53×17	OK039/ OK041
1.6 TDI	03/10→	66	90	LG		[+]	**PF0576**	131,5×62,7×18,8	OK033/ OK077	LG		[-]	**PF0131**	87×53×17	OK039/ OK041
1.6 TDI	03/10→	66	90	ATE		[+]	**PF0132**	146×54,7×19,5		LG		[-]	**PF0131**	87×53×17	OK039/ OK041
1.6 TDI	03/10→	77	105	LG		[+]	**PF0576**	131,5×62,7×18,8	OK033/ OK077	LG		[-]	**PF0131**	87×53×17	OK039/ OK041
1.6 TDI	03/10→	77	105	ATE		[+]	**PF0132**	146×54,7×19,5		LG		[-]	**PF0131**	87×53×17	OK039/ OK041
1.6 TDI	04/10→	55	75	LG		[+]	**PF0576**	131,5×62,7×18,8	OK033/ OK077	LG		[-]	**PF0131**	87×53×17	OK039/ OK041
1.6 TDI	04/10→	55	75	ATE		[+]	**PF0132**	146×54,7×19,5		LG		[-]	**PF0131**	87×53×17	OK039/ OK041
1.9 TDI	04/07→	77	105	LG		[+]	**PF0576**	131,5×62,7×18,8	OK033/ OK077	LG		[-]	**PF0131**	87×53×17	OK039/ OK041
1.9 TDI	04/07→	77	105	ATE		[+]	**PF0132**	146×54,7×19,5		LG		[-]	**PF0131**	87×53×17	OK039/ OK041
Fabia Combi III															
1.2	10/07→	51	70	ATE		[+]	**PF0132**	146×54,7×19,5		LG		[-]	**PF0348**	87×53×16	OK039
1.2	10/07→	51	70	LG		[+]	**PF0576**	131,5×62,7×18,8	OK033/ OK077	LG		[-]	**PF0348**	87×53×16	OK039
1.2	10/07→	44	60	ATE		[+]	**PF0132**	146×54,7×19,5		LG		[-]	**PF0348**	87×53×16	OK039
1.2	10/07→	44	60	LG		[+]	**PF0576**	131,5×62,7×18,8	OK033/ OK077	LG		[-]	**PF0348**	87×53×16	OK039
1.2 16V	11/11→	44	60	ATE		[+]	**PF0132**	146×54,7×19,5		LG		[-]	**PF0348**	87×53×16	OK039
1.2 16V	11/11→	44	60	LG		[+]	**PF0576**	131,5×62,7×18,8	OK033/ OK077	LG		[-]	**PF0348**	87×53×16	OK039
1.2 TDI	05/10→	55	75	ATE		[+]	**PF0132**	146×54,7×19,5		LG		[-]	**PF0348**	87×53×16	OK039
1.2 TDI	05/10→	55	75	LG		[+]	**PF0576**	131,5×62,7×18,8	OK033/ OK077	LG		[-]	**PF0348**	87×53×16	OK039
1.2 TSI	03/10→	77	105	ATE		[+]	**PF0132**	146×54,7×19,5		LG		[-]	**PF0348**	87×53×16	OK039
1.2 TSI	03/10→	77	105	LG		[+]	**PF0576**	131,5×62,7×18,8	OK033/ OK077	LG		[-]	**PF0348**	87×53×16	OK039
1.2 TSI	03/10→	63	86	ATE		[+]	**PF0132**	146×54,7×19,5		LG		[-]	**PF0348**	87×53×16	OK039

		KW	CV													
				SiS	i	W.i.	MAGNETI MARELLI	W×H×Th (mm)	Extra kit [Opt]	SiS	i	W.i.	MAGNETI MARELLI	W×H×Th (mm)	Extra kit [Opt]
SKODA															
Fabia Combi III															
1.2 TSI	03/10 →	63	86	LG		[+]	**PF0576**	131,5×62,7×18,8	OK033/ OK077	LG		[-]	**PF0348**	87×53×16	OK039
1.4	10/07 →	63	86	ATE		[+]	**PF0132**	146×54,7×19,5		LG		[-]	**PF0348**	87×53×16	OK039
1.4	10/07 →	63	86	LG		[+]	**PF0576**	131,5×62,7×18,8	OK033/ OK077	LG		[-]	**PF0348**	87×53×16	OK039
1.4 TDI	10/07 →	51	70	ATE		[+]	**PF0132**	146×54,7×19,5		LG		[-]	**PF0348**	87×53×16	OK039
1.4 TDI	10/07 →	51	70	LG		[+]	**PF0576**	131,5×62,7×18,8	OK033/ OK077	LG		[-]	**PF0348**	87×53×16	OK039
1.4 TDI	10/07 →	59	80	ATE		[+]	**PF0132**	146×54,7×19,5		LG		[-]	**PF0348**	87×53×16	OK039
1.4 TDI	10/07 →	59	80	LG		[+]	**PF0576**	131,5×62,7×18,8	OK033/ OK077	LG		[-]	**PF0348**	87×53×16	OK039
1.4 TSI	05/10 →	132	180	ATE		[+]	**PF0132**	146×54,7×19,5		LG		[-]	**PF0348**	87×53×16	OK039
1.4 TSI	05/10 →	132	180	LG		[+]	**PF0576**	131,5×62,7×18,8	OK033/ OK077	LG		[-]	**PF0348**	87×53×16	OK039
1.6	10/07 →	77	105	ATE		[+]	**PF0132**	146×54,7×19,5		LG		[-]	**PF0348**	87×53×16	OK039
1.6	10/07 →	77	105	LG		[+]	**PF0576**	131,5×62,7×18,8	OK033/ OK077	LG		[-]	**PF0348**	87×53×16	OK039
1.6 TDI	03/10 →	66	90	ATE		[+]	**PF0132**	146×54,7×19,5		LG		[-]	**PF0348**	87×53×16	OK039
1.6 TDI	03/10 →	66	90	LG		[+]	**PF0576**	131,5×62,7×18,8	OK033/ OK077	LG		[-]	**PF0348**	87×53×16	OK039
1.6 TDI	03/10 →	77	105	ATE		[+]	**PF0132**	146×54,7×19,5		LG		[-]	**PF0348**	87×53×16	OK039
1.6 TDI	03/10 →	77	105	LG		[+]	**PF0576**	131,5×62,7×18,8	OK033/ OK077	LG		[-]	**PF0348**	87×53×16	OK039
1.6 TDI	04/10 →	55	75	ATE		[+]	**PF0132**	146×54,7×19,5		LG		[-]	**PF0348**	87×53×16	OK039
1.6 TDI	04/10 →	55	75	LG		[+]	**PF0576**	131,5×62,7×18,8	OK033/ OK077	LG		[-]	**PF0348**	87×53×16	OK039
1.9 TDI	10/07 →	77	105	ATE		[+]	**PF0132**	146×54,7×19,5		LG		[-]	**PF0348**	87×53×16	OK039
1.9 TDI	10/07 →	77	105	LG		[+]	**PF0576**	131,5×62,7×18,8	OK033/ OK077	LG		[-]	**PF0348**	87×53×16	OK039
Favorit (781)															
1.3	01/94 → 09/94	50	68	LG		[-]	**PF0397**	114,9×61×17,5	OK032						
Felicia I Berlina (6U1)															
1.3	10/94 → 03/98	40	54	LG		[-]	**PF0397**	114,9×61×17,5	OK032						
1.3	10/94 → 03/98	50	68	LG		[-]	**PF0397**	114,9×61×17,5	OK032						
1.3	10/94 → 03/98	43	58	LG		[-]	**PF0397**	114,9×61×17,5	OK032						
1.6 LX	08/95 → 03/98	55	75	LG		[-]	**PF0397**	114,9×61×17,5	OK032						
1.9 D	10/95 → 03/98	47	64	LG		[-]	**PF0397**	114,9×61×17,5	OK032						
Felicia I SW (6U5)															
1.3	08/95 → 03/98	43	58	LG		[-]	**PF0397**	114,9×61×17,5	OK032						
1.3 LX	08/95 → 03/98	40	54	LG		[-]	**PF0397**	114,9×61×17,5	OK032						
1.3 LXI	08/95 → 03/98	50	68	LG		[-]	**PF0397**	114,9×61×17,5	OK032						
1.6 GLX	08/95 → 03/98	55	75	LG		[-]	**PF0397**	114,9×61×17,5	OK032						
1.9 D	10/95 → 03/98	47	64	LG		[-]	**PF0397**	114,9×61×17,5	OK032						

		KW	CV	SiS	i	W.i.	MAGNETI MARELLI	W×H×Th (mm)	Extra kit [Opt]	SiS	i	W.i.	MAGNETI MARELLI	W×H×Th (mm)	Extra kit [Opt]
SKODA															
Felicia Van (797)															
1.3	06/97 →	50	68	LG		[-]	**PF0397**	114,9×61×17,5	OK032						
1.3	06/97 →	40	54	LG		[-]	**PF0397**	114,9×61×17,5	OK032						
1.3	10/95 → 04/02	43	58	LG		[-]	**PF0397**	114,9×61×17,5	OK032						
1.6	06/97 →	55	75	LG		[-]	**PF0397**	114,9×61×17,5	OK032						
1.9 D	06/97 →	47	64	LG		[-]	**PF0397**	114,9×61×17,5	OK032						
Felicia II Berlina (6U1)															
1.3	01/98 → 06/01	40	54	LG		[-]	**PF0397**	114,9×61×17,5	OK032						
1.3	01/98 → 06/01	50	68	LG		[-]	**PF0397**	114,9×61×17,5	OK032						
1.3	01/98 → 06/01	43	58	LG		[-]	**PF0397**	114,9×61×17,5	OK032						
1.6	01/98 → 06/01	55	75	LG		[-]	**PF0397**	114,9×61×17,5	OK032						
1.9 D	01/98 → 06/01	47	64	LG		[-]	**PF0397**	114,9×61×17,5	OK032						
Felicia II SW (6U5)															
1.3	01/98 → 06/01	50	68	LG		[-]	**PF0397**	114,9×61×17,5	OK032						
1.6	01/98 → 06/01	55	75	LG		[-]	**PF0397**	114,9×61×17,5	OK032						
1.9 D	01/98 → 06/01	47	64	LG		[-]	**PF0397**	114,9×61×17,5	OK032						
Favorit Forman (785)															
1.3	09/91 → 06/95	40	54	LG	(135E)	[-]	**PF0397**	114,9×61×17,5	OK032						
1.3	12/91 → 06/95	44	60	LG	(135)	[-]	**PF0397**	114,9×61×17,5	OK032						
1.3	08/91 → 06/95	45	61	LG	(136)	[-]	**PF0397**	114,9×61×17,5	OK032						
Octavia I															
1.3i LX/GLX	97 → 00			ATE		[-]	**PF0515**	146×54,7×19,5							
1.6i LX/GLX	97 → 00			ATE		[-]	**PF0515**	146×54,7×19,5							
1.8 SLX 20V	97 → 00			ATE		[-]	**PF0515**	146×54,7×19,5							
1.9 D GLX	97 → 00			ATE		[-]	**PF0515**	146×54,7×19,5							
Octavia II															
1.6i	00 → 04			ATE		[+]	**PF0516**	146×54,7×19,5		LG		[-]	**PF0131**	87×53×17	OK039/ OK041
1.6i	00 → 04			ATE		[-]	**PF0134**	146×54,7×19,5		LG		[-]	**PF0131**	87×53×17	OK039/ OK041
1.6i 16V	00 → 04			ATE	14"	[+]	**PF0516**	146×54,7×19,5		LG		[-]	**PF0131**	87×53×17	OK039/ OK041
1.6i 16V	00 → 04			ATE	15"	[+]	**PF0516**	146×54,7×19,5		LG		[-]	**PF0131**	87×53×17	OK039/ OK041
1.8i 20V	00 → 04	92		ATE		[+]	**PF0516**	146×54,7×19,5		LG		[-]	**PF0131**	87×53×17	OK039/ OK041
1.8i 20V T.	00 → 04			ATE		[+]	**PF0136**	156,4×74,2×19		LG		[-]	**PF0131**	87×53×17	OK039/ OK041
1.9 TDI	00 → 04	81		ATE		[+]	**PF0516**	146×54,7×19,5		LG		[-]	**PF0131**	87×53×17	OK039/ OK041
1.9 TDI	00 → 04	81		ATE		[-]	**PF0134**	146×54,7×19,5		LG		[-]	**PF0131**	87×53×17	OK039/ OK041
1.9 TDI	00 → 04	130		ATE		[+]	**PF0136**	156,4×74,2×19		LG		[-]	**PF0131**	87×53×17	OK039/ OK041

		KW	CV	SiS	i	W.i.	MAGNETI MARELLI	W×H×Th (mm)	Extra kit [Opt]	SiS	i	W.i.	MAGNETI MARELLI	W×H×Th (mm)	Extra kit [Opt]
SKODA															
Octavia II															
1.9 Sdi	00 → 04	50		ATE		[+]	**PF0516**	146×54,7×19,5		LG		[-]	**PF0131**	87×53×17	OK039/ OK041
1.9 Sdi	00 → 04	50		ATE		[-]	**PF0134**	146×54,7×19,5		LG		[-]	**PF0131**	87×53×17	OK039/ OK041
2.0i	00 → 04	84		ATE		[+]	**PF0516**	146×54,7×19,5		LG		[-]	**PF0131**	87×53×17	OK039/ OK041
Octavia III (1Z3)															
1.4	06/04 →			ATE		[+]	**PF0132**	146×54,7×19,5		LG		[-]	**PF0133**	105,5×56×17	OK039/ OK085
1.4	06/04 →			ATE		[+]	**PF0135**	155,1×66×20,1		LG		[-]	**PF0131**	87×53×17	OK039/ OK041
1.4	06/04 →			ATE		[+]	**PF0135**	155,1×66×20,1		BSC	1KS/ØDisc 272×16	[-]	**PF0441**	109,2×53,3×17,5	OK033
1.6	06/04 →			ATE		[+]	**PF0132**	146×54,7×19,5		LG		[-]	**PF0133**	105,5×56×17	OK039/ OK085
1.6	06/04 →			ATE		[+]	**PF0135**	155,1×66×20,1		LG		[-]	**PF0131**	87×53×17	OK039/ OK041
1.6	06/04 →			ATE		[+]	**PF0135**	155,1×66×20,1		BSC	1KS/ØDisc 272×16	[-]	**PF0441**	109,2×53,3×17,5	OK033
1.6 Fsi	06/04 →			ATE		[+]	**PF0132**	146×54,7×19,5		LG		[-]	**PF0133**	105,5×56×17	OK039/ OK085
1.6 Fsi	06/04 →			ATE		[+]	**PF0135**	155,1×66×20,1		LG		[-]	**PF0131**	87×53×17	OK039/ OK041
1.6 Fsi	06/04 →			ATE		[+]	**PF0135**	155,1×66×20,1		BSC	1KS/ØDisc 272×16	[-]	**PF0441**	109,2×53,3×17,5	OK033
1.9 TDI	06/04 →			ATE		[+]	**PF0132**	146×54,7×19,5		LG		[-]	**PF0133**	105,5×56×17	OK039/ OK085
1.9 TDI	06/04 →			ATE		[+]	**PF0135**	155,1×66×20,1		LG		[-]	**PF0131**	87×53×17	OK039/ OK041
1.9 TDI	06/04 →			ATE		[+]	**PF0135**	155,1×66×20,1		BSC	1KS/ØDisc 272×16	[-]	**PF0441**	109,2×53,3×17,5	OK033
1.9 TDI 4x4	06/04 →			ATE		[+]	**PF0132**	146×54,7×19,5		LG		[-]	**PF0133**	105,5×56×17	OK039/ OK085
1.9 TDI 4x4	06/04 →			ATE		[+]	**PF0135**	155,1×66×20,1		LG		[-]	**PF0131**	87×53×17	OK039/ OK041
1.9 TDI 4x4	06/04 →			ATE		[+]	**PF0135**	155,1×66×20,1		BSC	1KS/ØDisc 272×16	[-]	**PF0441**	109,2×53,3×17,5	OK033
2.0	06/04 →			ATE		[+]	**PF0132**	146×54,7×19,5		LG		[-]	**PF0133**	105,5×56×17	OK039/ OK085
2.0	06/04 →			ATE		[+]	**PF0132**	146×54,7×19,5		BSC	1KS/ØDisc 272×16	[-]	**PF0441**	109,2×53,3×17,5	OK033
2.0 Fsi	11/04 →			ATE		[+]	**PF0135**	155,1×66×20,1		LG		[-]	**PF0131**	87×53×17	OK039/ OK041

		KW	CV	SiS	i	W.i.	MAGNETI MARELLI	W×H×Th (mm)	Extra kit [Opt]	SiS	i	W.i.	MAGNETI MARELLI	W×H×Th (mm)	Extra kit [Opt]
SKODA															
Octavia III (1Z3)															
2.0 Fsi	11/04 →			ATE		[+]	**PF0135**	155,1×66×20,1		BSC	1KS/ØDisc 272×16	[-]	**PF0441**	109,2×53,3×17,5	OK033
2.0 Fsi 4x4	11/04 →			ATE		[+]	**PF0132**	146×54,7×19,5		LG		[-]	**PF0133**	105,5×56×17	OK039/ OK085
2.0 Fsi 4x4	11/04 →			ATE		[+]	**PF0135**	155,1×66×20,1		LG		[-]	**PF0131**	87×53×17	OK039/ OK041
2.0 Fsi 4x4	11/04 →			ATE		[+]	**PF0135**	155,1×66×20,1		BSC	1KS/ØDisc 272×16	[-]	**PF0441**	109,2×53,3×17,5	OK033
2.0 TDI	06/04 →			ATE		[+]	**PF0135**	155,1×66×20,1		LG		[-]	**PF0131**	87×53×17	OK039/ OK041
2.0 TDI	06/04 →			ATE		[+]	**PF0132**	146×54,7×19,5		LG		[-]	**PF0133**	105,5×56×17	OK039/ OK085
2.0 TDI	06/04 →			ATE		[+]	**PF0132**	146×54,7×19,5		BSC	1KS/ØDisc 272×16	[-]	**PF0441**	109,2×53,3×17,5	OK033
Octavia III Combi (1Z5)															
1.2	02/10 →			ATE		[+]	**PF0135**	155,1×66×20,1		LG		[-]	**PF0131**	87×53×17	OK039/ OK041
1.2	02/10 →			ATE		[+]	**PF0132**	146×54,7×19,5		LG		[-]	**PF0133**	105,5×56×17	OK039/ OK085
1.2	02/10 →			ATE		[+]	**PF0132**	146×54,7×19,5		BSC	1KS/ØDisc 272×16	[-]	**PF0441**	109,2×53,3×17,5	OK033
1.4	05/04 → 06	55	75	ATE		[+]	**PF0135**	155,1×66×20,1		LG		[-]	**PF0131**	87×53×17	OK039/ OK041
1.4	05/04 → 06	55	75	ATE		[+]	**PF0132**	146×54,7×19,5		LG		[-]	**PF0133**	105,5×56×17	OK039/ OK085
1.4	05/04 → 06	55	75	ATE		[+]	**PF0132**	146×54,7×19,5		BSC	1KS/ØDisc 272×16	[-]	**PF0441**	109,2×53,3×17,5	OK033
1.6	06/04 →			ATE		[+]	**PF0135**	155,1×66×20,1		LG		[-]	**PF0131**	87×53×17	OK039/ OK041
1.6	06/04 →			ATE		[+]	**PF0132**	146×54,7×19,5		LG		[-]	**PF0133**	105,5×56×17	OK039/ OK085
1.6	06/04 →			ATE		[+]	**PF0132**	146×54,7×19,5		BSC	1KS/ØDisc 272×16	[-]	**PF0441**	109,2×53,3×17,5	OK033
1.6 Fsi	06/04 →			ATE		[+]	**PF0135**	155,1×66×20,1		LG		[-]	**PF0131**	87×53×17	OK039/ OK041
1.6 Fsi	06/04 →			ATE		[+]	**PF0132**	146×54,7×19,5		LG		[-]	**PF0133**	105,5×56×17	OK039/ OK085
1.6 Fsi	06/04 →			ATE		[+]	**PF0132**	146×54,7×19,5		BSC	1KS/ØDisc 272×16	[-]	**PF0441**	109,2×53,3×17,5	OK033
1.8 TSI	03/09 →	112	152	ATE		[+]	**PF0135**	155,1×66×20,1		LG		[-]	**PF0131**	87×53×17	OK039/ OK041
1.8 TSI	03/09 →	112	152	ATE		[+]	**PF0132**	146×54,7×19,5		LG		[-]	**PF0133**	105,5×56×17	OK039/ OK085

		KW	CV	SiS	i	W.i.	MAGNETI MARELLI	W×H×Th (mm)	Extra kit [Opt]	SiS	i	W.i.	MAGNETI MARELLI	W×H×Th (mm)	Extra kit [Opt]
SKODA															
Octavia III Combi (1Z5)															
1.8 TSI	03/09→	112	152	ATE		[+]	**PF0132**	146×54,7×19,5		BSC	1KS/ØDisc 272×16	[-]	**PF0441**	109,2×53,3×17,5	OK033
1.9 TDI	06/04→			ATE		[+]	**PF0135**	155,1×66×20,1		LG		[-]	**PF0131**	87×53×17	OK039/ OK041
1.9 TDI	06/04→			ATE		[+]	**PF0132**	146×54,7×19,5		LG		[-]	**PF0133**	105,5×56×17	OK039/ OK085
1.9 TDI	06/04→			ATE		[+]	**PF0132**	146×54,7×19,5		BSC	1KS/ØDisc 272×16	[-]	**PF0441**	109,2×53,3×17,5	OK033
1.9 TDI 4x4	11/04→			ATE		[+]	**PF0135**	155,1×66×20,1		LG		[-]	**PF0131**	87×53×17	OK039/ OK041
1.9 TDI 4x4	11/04→			ATE		[+]	**PF0132**	146×54,7×19,5		LG		[-]	**PF0133**	105,5×56×17	OK039/ OK085
1.9 TDI 4x4	11/04→			ATE		[+]	**PF0132**	146×54,7×19,5		BSC	1KS/ØDisc 272×16	[-]	**PF0441**	109,2×53,3×17,5	OK033
2.0 Fsi	11/04→			ATE		[+]	**PF0135**	155,1×66×20,1		LG		[-]	**PF0131**	87×53×17	OK039/ OK041
2.0 Fsi	11/04→			ATE		[+]	**PF0132**	146×54,7×19,5		LG		[-]	**PF0133**	105,5×56×17	OK039/ OK085
2.0 Fsi	11/04→			ATE		[+]	**PF0132**	146×54,7×19,5		BSC	1KS/ØDisc 272×16	[-]	**PF0441**	109,2×53,3×17,5	OK033
2.0 Fsi 4x4	11/04→			ATE		[+]	**PF0135**	155,1×66×20,1		LG		[-]	**PF0131**	87×53×17	OK039/ OK041
2.0 Fsi 4x4	11/04→			ATE		[+]	**PF0132**	146×54,7×19,5		LG		[-]	**PF0133**	105,5×56×17	OK039/ OK085
2.0 Fsi 4x4	11/04→			ATE		[+]	**PF0132**	146×54,7×19,5		BSC	1KS/ØDisc 272×16	[-]	**PF0441**	109,2×53,3×17,5	OK033
2.0 TDI	06/04→			ATE		[+]	**PF0135**	155,1×66×20,1		LG		[-]	**PF0131**	87×53×17	OK039/ OK041
2.0 TDI	06/04→			ATE		[+]	**PF0132**	146×54,7×19,5		LG		[-]	**PF0133**	105,5×56×17	OK039/ OK085
2.0 TDI	06/04→			ATE		[+]	**PF0132**	146×54,7×19,5		BSC	1KS/ØDisc 272×16	[-]	**PF0441**	109,2×53,3×17,5	OK033
2.0 TDI	05/11→	81	110	ATE		[+]	**PF0135**	155,1×66×20,1		LG		[-]	**PF0131**	87×53×17	OK039/ OK041
2.0 TDI	05/11→	81	110	ATE		[+]	**PF0132**	146×54,7×19,5		LG		[-]	**PF0133**	105,5×56×17	OK039/ OK085
2.0 TDI	05/11→	81	110	ATE		[+]	**PF0132**	146×54,7×19,5		BSC	1KS/ØDisc 272×16	[-]	**PF0441**	109,2×53,3×17,5	OK033
Octavia IV (5E3)															
1.2 TSI	11/12→	63	86	LG	Ø Disc 288/312 - 1ZE/1ZA	[+]	**PF0715**	160×64,5×20,3	OK088	LG	1KD	[-]	**PF0131**	87×53×17	OK039/ OK041

		KW	CV	SiS	i	W.i.	MAGNETI MARELLI	W×H×Th (mm)	Extra kit [Opt]	SiS	i	W.i.	MAGNETI MARELLI	W×H×Th (mm)	Extra kit [Opt]
SKODA															
Octavia IV (5E3)															
1.2 TSI	11/12→	77	105	LG	Ø Disc 288/312 - 1ZE/1ZA	[+]	**PF0715**	160×64,5×20,3	OK088	LG	1KD	[-]	**PF0131**	87×53×17	OK039/ OK041
1.4 TSI	11/12→	103	140	LG	Ø Disc 288/312 - 1ZE/1ZA	[+]	**PF0715**	160×64,5×20,3	OK088	LG	1KD	[-]	**PF0131**	87×53×17	OK039/ OK041
1.6 TDI	11/12→	66	90	LG	Ø Disc 288/312 - 1ZE/1ZA	[+]	**PF0715**	160×64,5×20,3	OK088	LG	1KD	[-]	**PF0131**	87×53×17	OK039/ OK041
1.6 TDI	11/12→	77	105	LG	Ø Disc 288/312 - 1ZE/1ZA	[+]	**PF0715**	160×64,5×20,3	OK088	LG	1KD	[-]	**PF0131**	87×53×17	OK039/ OK041
1.6 TDI	05/13→	81	110	LG	Ø Disc 288/312 - 1ZE/1ZA	[+]	**PF0715**	160×64,5×20,3	OK088	LG	1KD	[-]	**PF0131**	87×53×17	OK039/ OK041
1.8 TSI	11/12→	132	180	LG	Ø Disc 288/312 - 1ZE/1ZA	[+]	**PF0715**	160×64,5×20,3	OK088	LG	1KD	[-]	**PF0131**	87×53×17	OK039/ OK041
2.0 TDI	11/12→	105	143	LG	Ø Disc 288/312 - 1ZE/1ZA	[+]	**PF0715**	160×64,5×20,3	OK088	LG	1KD	[-]	**PF0131**	87×53×17	OK039/ OK041
2.0 TDI	11/12→	110	150	LG	Ø Disc 288/312 - 1ZE/1ZA	[+]	**PF0715**	160×64,5×20,3	OK088	LG	1KD	[-]	**PF0131**	87×53×17	OK039/ OK041
2.0 TDI	05/13→	135	184	LG	Ø Disc 288/312 - 1ZE/1ZA	[+]	**PF0715**	160×64,5×20,3	OK088	LG	1KD	[-]	**PF0131**	87×53×17	OK039/ OK041
Octavia IV SW (5E5)															
1.2 TSI	11/12→	63	86	LG	Ø Disc 288/312 - 1ZE/1ZA	[+]	**PF0715**	160×64,5×20,3	OK088	LG	1KD	[-]	**PF0131**	87×53×17	OK039/ OK041
1.2 TSI	11/12→	77	105	LG	Ø Disc 288/312 - 1ZE/1ZA	[+]	**PF0715**	160×64,5×20,3	OK088	LG	1KD	[-]	**PF0131**	87×53×17	OK039/ OK041
1.4 TSI	11/12→	103	140	LG	Ø Disc 288/312 - 1ZE/1ZA	[+]	**PF0715**	160×64,5×20,3	OK088	LG	1KD	[-]	**PF0131**	87×53×17	OK039/ OK041
1.6 TDI	11/12→	66	90	LG	Ø Disc 288/312 - 1ZE/1ZA	[+]	**PF0715**	160×64,5×20,3	OK088	LG	1KD	[-]	**PF0131**	87×53×17	OK039/ OK041
1.6 TDI	11/12→	77	105	LG	Ø Disc 288/312 - 1ZE/1ZA	[+]	**PF0715**	160×64,5×20,3	OK088	LG	1KD	[-]	**PF0131**	87×53×17	OK039/ OK041

		KW	CV	SiS	i	W.i.	MAGNETI MARELLI	W×H×Th (mm)	Extra kit [Opt]	SiS	i	W.i.	MAGNETI MARELLI	W×H×Th (mm)	Extra kit [Opt]
SKODA															
Octavia IV SW (5E5)															
1.6 TDI	05/13→	81	110	LG	Ø Disc 288/312 - 1ZE/1ZA	[+]	**PF0715**	160×64,5×20,3	OK088	LG	1KD	[-]	**PF0131**	87×53×17	OK039/ OK041
1.8 TSI	11/12→	132	180	LG	Ø Disc 288/312 - 1ZE/1ZA	[+]	**PF0715**	160×64,5×20,3	OK088	LG	1KD	[-]	**PF0131**	87×53×17	OK039/ OK041
2.0 TDI	11/12→	110	150	LG	Ø Disc 288/312 - 1ZE/1ZA	[+]	**PF0715**	160×64,5×20,3	OK088	LG	1KD	[-]	**PF0131**	87×53×17	OK039/ OK041
2.0 TDI	05/13→	135	184	LG	Ø Disc 288/312 - 1ZE/1ZA	[+]	**PF0715**	160×64,5×20,3	OK088	LG	1KD	[-]	**PF0131**	87×53×17	OK039/ OK041
Rapid															
1.2	07/12→	55	75	ATE		[+]	**PF0135**	155,1×66×20,1		LG		[-]	**PF0131**	87×53×17	OK039/ OK041
1.2	07/12→	55	75	ATE		[-]	**PF0134**	146×54,7×19,5		LG		[-]	**PF0131**	87×53×17	OK039/ OK041
1.6	10/11→	77	105	ATE		[+]	**PF0135**	155,1×66×20,1		LG		[-]	**PF0131**	87×53×17	OK039/ OK041
1.6	10/11→	77	105	ATE		[-]	**PF0134**	146×54,7×19,5		LG		[-]	**PF0131**	87×53×17	OK039/ OK041
1.6	10/11→	77	105	ATE		[+]	**PF0135**	155,1×66×20,1		LG		[-]	**PF0131**	87×53×17	OK039/ OK041
1.6	10/11→	77	105	ATE		[-]	**PF0134**	146×54,7×19,5		LG		[-]	**PF0131**	87×53×17	OK039/ OK041
1.6 TDI	08/13→	66	90	ATE		[+]	**PF0135**	155,1×66×20,1		LG		[-]	**PF0131**	87×53×17	OK039/ OK041
1.6 TDI	08/13→	66	90	ATE		[-]	**PF0134**	146×54,7×19,5		LG		[-]	**PF0131**	87×53×17	OK039/ OK041
1.2 TSI	07/12→	63	86	ATE		[+]	**PF0135**	155,1×66×20,1		LG		[-]	**PF0131**	87×53×17	OK039/ OK041
1.2 TSI	07/12→	63	86	ATE		[-]	**PF0134**	146×54,7×19,5		LG		[-]	**PF0131**	87×53×17	OK039/ OK041
1.2 TSI	07/12→	77	105	ATE		[+]	**PF0135**	155,1×66×20,1		LG		[-]	**PF0131**	87×53×17	OK039/ OK041
1.2 TSI	07/12→	77	105	ATE		[-]	**PF0134**	146×54,7×19,5		LG		[-]	**PF0131**	87×53×17	OK039/ OK041
1.4 TSI	07/12→	90	122	ATE		[+]	**PF0135**	155,1×66×20,1		LG		[-]	**PF0131**	87×53×17	OK039/ OK041
1.4 TSI	07/12→	90	122	ATE		[-]	**PF0134**	146×54,7×19,5		LG		[-]	**PF0131**	87×53×17	OK039/ OK041
1.6 TDI	07/12→	77	105	ATE		[+]	**PF0135**	155,1×66×20,1		LG		[-]	**PF0131**	87×53×17	OK039/ OK041

		KW	CV												
				SiS	i	W.i.	MAGNETI MARELLI	W×H×Th (mm)	Extra kit [Opt]	SiS	i	W.i.	MAGNETI MARELLI	W×H×Th (mm)	Extra kit [Opt]
SKODA															
Rapid															
1.6 TDI	07/12→	77	105	ATE		[-]	**PF0134**	146×54,7×19,5		LG		[-]	**PF0131**	87×53×17	OK039/ OK041
Rapid Spaceback															
1.2 TSI	10/13→	63	86	ATE		[+]	**PF0135**	155,1×66×20,1		LG		[-]	**PF0131**	87×53×17	OK039/ OK041
1.2 TSI	10/13→	63	86	ATE		[-]	**PF0134**	146×54,7×19,5		LG		[-]	**PF0131**	87×53×17	OK039/ OK041
1.2 TSI	10/13→	77	105	ATE		[+]	**PF0135**	155,1×66×20,1		LG		[-]	**PF0131**	87×53×17	OK039/ OK041
1.2 TSI	10/13→	77	105	ATE		[-]	**PF0134**	146×54,7×19,5		LG		[-]	**PF0131**	87×53×17	OK039/ OK041
1.4 TSI	10/13→	90	122	ATE		[+]	**PF0135**	155,1×66×20,1		LG		[-]	**PF0131**	87×53×17	OK039/ OK041
1.4 TSI	10/13→	90	122	ATE		[-]	**PF0134**	146×54,7×19,5		LG		[-]	**PF0131**	87×53×17	OK039/ OK041
1.6 TDI	10/13→	66	90	ATE		[+]	**PF0135**	155,1×66×20,1		LG		[-]	**PF0131**	87×53×17	OK039/ OK041
1.6 TDI	10/13→	66	90	ATE		[-]	**PF0134**	146×54,7×19,5		LG		[-]	**PF0131**	87×53×17	OK039/ OK041
1.6 TDI	10/13→	77	105	ATE		[+]	**PF0135**	155,1×66×20,1		LG		[-]	**PF0131**	87×53×17	OK039/ OK041
1.6 TDI	10/13→	77	105	ATE		[+]	**PF0135**	155,1×66×20,1		LG		[-]	**PF0131**	87×53×17	OK039/ OK041
Roomster (5J)															
1.2	05/06→01/07	47	64	ATE		[+]	**PF0132**	146×54,7×19,5		LG		[-]	**PF0131**	87×53×17	OK039/ OK041
1.2	05/06→01/07	47	64	LG		[+]	**PF0576**	131,5×62,7×18,8	OK033/ OK077	LG		[-]	**PF0131**	87×53×17	OK039/ OK041
1.2	01/07→	51	70	ATE		[+]	**PF0132**	146×54,7×19,5		LG		[-]	**PF0131**	87×53×17	OK039/ OK041
1.2	01/07→	51	70	LG		[+]	**PF0576**	131,5×62,7×18,8	OK033/ OK077	LG		[-]	**PF0131**	87×53×17	OK039/ OK041
1.2 TDI	03/10→	55	75	ATE		[+]	**PF0132**	146×54,7×19,5		LG		[-]	**PF0131**	87×53×17	OK039/ OK041
1.2 TDI	03/10→	55	75	LG		[+]	**PF0576**	131,5×62,7×18,8	OK033/ OK077	LG		[-]	**PF0131**	87×53×17	OK039/ OK041
1.2 TSI	03/10→	77	105	ATE		[+]	**PF0132**	146×54,7×19,5		LG		[-]	**PF0131**	87×53×17	OK039/ OK041
1.2 TSI	03/10→	77	105	LG		[+]	**PF0576**	131,5×62,7×18,8	OK033/ OK077	LG		[-]	**PF0131**	87×53×17	OK039/ OK041
1.2 TSI	03/10→	63	86	ATE		[+]	**PF0132**	146×54,7×19,5		LG		[-]	**PF0131**	87×53×17	OK039/ OK041
1.2 TSI	03/10→	63	86	LG		[+]	**PF0576**	131,5×62,7×18,8	OK033/ OK077	LG		[-]	**PF0131**	87×53×17	OK039/ OK041

		KW	CV	SiS	i	W.i.	MAGNETI MARELLI	W×H×Th (mm)	Extra kit [Opt]	SiS	i	W.i.	MAGNETI MARELLI	W×H×Th (mm)	Extra kit [Opt]
SKODA															
Roomster (5J)															
1.4	09/06 →	63	86	ATE		[+]	**PF0132**	146×54,7×19,5		LG		[-]	**PF0131**	87×53×17	OK039/ OK041
1.4	09/06 →	63	86	LG		[+]	**PF0576**	131,5×62,7×18,8	OK033/ OK077	LG		[-]	**PF0131**	87×53×17	OK039/ OK041
1.4 TDI	07/06 → 03/10	51	70	ATE		[+]	**PF0132**	146×54,7×19,5		LG		[-]	**PF0131**	87×53×17	OK039/ OK041
1.4 TDI	07/06 → 03/10	51	70	LG		[+]	**PF0576**	131,5×62,7×18,8	OK033/ OK077	LG		[-]	**PF0131**	87×53×17	OK039/ OK041
1.4 TDI	09/06 → 03/10	59	80	ATE		[+]	**PF0132**	146×54,7×19,5		LG		[-]	**PF0131**	87×53×17	OK039/ OK041
1.4 TDI	09/06 → 03/10	59	80	LG		[+]	**PF0576**	131,5×62,7×18,8	OK033/ OK077	LG		[-]	**PF0131**	87×53×17	OK039/ OK041
1.6	09/06 →	77	105	ATE		[+]	**PF0132**	146×54,7×19,5		LG		[-]	**PF0131**	87×53×17	OK039/ OK041
1.6	09/06 →	77	105	LG		[+]	**PF0576**	131,5×62,7×18,8	OK033/ OK077	LG		[-]	**PF0131**	87×53×17	OK039/ OK041
1.6 TDI	03/10 →	66	90	ATE		[+]	**PF0132**	146×54,7×19,5		LG		[-]	**PF0131**	87×53×17	OK039/ OK041
1.6 TDI	03/10 →	66	90	LG		[+]	**PF0576**	131,5×62,7×18,8	OK033/ OK077	LG		[-]	**PF0131**	87×53×17	OK039/ OK041
1.6 TDI	03/10 →	77	105	ATE		[+]	**PF0132**	146×54,7×19,5		LG		[-]	**PF0131**	87×53×17	OK039/ OK041
1.6 TDI	03/10 →	77	105	LG		[+]	**PF0576**	131,5×62,7×18,8	OK033/ OK077	LG		[-]	**PF0131**	87×53×17	OK039/ OK041
1.9 TDI	03/06 → 05/06	74	101	ATE		[+]	**PF0132**	146×54,7×19,5		LG		[-]	**PF0131**	87×53×17	OK039/ OK041
1.9 TDI	03/06 → 05/06	74	101	LG		[+]	**PF0576**	131,5×62,7×18,8	OK033/ OK077	LG		[-]	**PF0131**	87×53×17	OK039/ OK041
1.9 TDI	09/06 → 03/10	77	105	ATE		[+]	**PF0132**	146×54,7×19,5		LG		[-]	**PF0131**	87×53×17	OK039/ OK041
1.9 TDI	09/06 → 03/10	77	105	LG		[+]	**PF0576**	131,5×62,7×18,8	OK033/ OK077	LG		[-]	**PF0131**	87×53×17	OK039/ OK041
Roomster Praktik (5J)															
1.2	03/07 →	51	70	ATE		[+]	**PF0132**	146×54,7×19,5		LG		[-]	**PF0131**	87×53×17	OK039/ OK041
1.2	03/07 →	51	70	LG		[+]	**PF0576**	131,5×62,7×18,8	OK033/ OK077	LG		[-]	**PF0131**	87×53×17	OK039/ OK041
1.2 TDI	03/10 →	55	75	ATE		[+]	**PF0132**	146×54,7×19,5		LG		[-]	**PF0131**	87×53×17	OK039/ OK041
1.2 TDI	03/10 →	55	75	LG		[+]	**PF0576**	131,5×62,7×18,8	OK033/ OK077	LG		[-]	**PF0131**	87×53×17	OK039/ OK041
1.2 TSI	03/10 →	63	86	ATE		[+]	**PF0132**	146×54,7×19,5		LG		[-]	**PF0131**	87×53×17	OK039/ OK041

		KW	CV												
				SiS	i	W.i.	MAGNETI MARELLI	W×H×Th (mm)	Extra kit [Opt]	SiS	i	W.i.	MAGNETI MARELLI	W×H×Th (mm)	Extra kit [Opt]
SKODA															
Roomster Praktik (5J)															
1.2 TSI	03/10 →	63	86	LG		[+]	**PF0576**	131,5×62,7×18,8	OK033/ OK077	LG		[-]	**PF0131**	87×53×17	OK039/ OK041
1.4	03/07 →	63	86	ATE		[+]	**PF0132**	146×54,7×19,5		LG		[-]	**PF0131**	87×53×17	OK039/ OK041
1.4	03/07 →	63	86	LG		[+]	**PF0576**	131,5×62,7×18,8	OK033/ OK077	LG		[-]	**PF0131**	87×53×17	OK039/ OK041
1.4 TDI	03/07 → 03/10	59	80	ATE		[+]	**PF0132**	146×54,7×19,5		LG		[-]	**PF0131**	87×53×17	OK039/ OK041
1.4 TDI	03/07 → 03/10	59	80	LG		[+]	**PF0576**	131,5×62,7×18,8	OK033/ OK077	LG		[-]	**PF0131**	87×53×17	OK039/ OK041
1.4 TDI	03/07 → 03/10	51	70	ATE		[+]	**PF0132**	146×54,7×19,5		LG		[-]	**PF0131**	87×53×17	OK039/ OK041
1.4 TDI	03/07 → 03/10	51	70	LG		[+]	**PF0576**	131,5×62,7×18,8	OK033/ OK077	LG		[-]	**PF0131**	87×53×17	OK039/ OK041
1.6 TDI	03/10 →	66	90	ATE		[+]	**PF0132**	146×54,7×19,5		LG		[-]	**PF0131**	87×53×17	OK039/ OK041
1.6 TDI	03/10 →	66	90	LG		[+]	**PF0576**	131,5×62,7×18,8	OK033/ OK077	LG		[-]	**PF0131**	87×53×17	OK039/ OK041
Superb I (3U4)															
1.8 T	02/02 → 03/08	110	150	ATE		[+]	**PF0142**	156,4×74,2×19,5		LG		[-]	**PF0131**	87×53×17	OK039/ OK041
1.9 TDI	02/02 → 03/08	96	130	ATE		[+]	**PF0142**	156,4×74,2×19,5		LG		[-]	**PF0131**	87×53×17	OK039/ OK041
1.9 TDI	08/02 → 10/05	74	101	ATE		[+]	**PF0142**	156,4×74,2×19,5		LG		[-]	**PF0131**	87×53×17	OK039/ OK041
1.9 TDI	01/07 → 03/08	85	115	ATE		[+]	**PF0142**	156,4×74,2×19,5		LG		[-]	**PF0131**	87×53×17	OK039/ OK041
1.9 TDI	10/05 → 05/07	77	105	ATE		[+]	**PF0142**	156,4×74,2×19,5		LG		[-]	**PF0131**	87×53×17	OK039/ OK041
2.0	02/02 → 03/08	85	115	ATE		[+]	**PF0142**	156,4×74,2×19,5		LG		[-]	**PF0131**	87×53×17	OK039/ OK041
2.0	02/06 → 03/08	91	124	ATE		[+]	**PF0142**	156,4×74,2×19,5		LG		[-]	**PF0131**	87×53×17	OK039/ OK041
2.0 TDI	10/05 → 03/08	103	140	ATE		[+]	**PF0142**	156,4×74,2×19,5		LG		[-]	**PF0131**	87×53×17	OK039/ OK041
2.5 TDI	02/02 → 08/03	114	155	ATE		[+]	**PF0142**	156,4×74,2×19,5		LG		[-]	**PF0131**	87×53×17	OK039/ OK041
2.5 TDI	06/03 → 03/08	120	163	ATE		[+]	**PF0142**	156,4×74,2×19,5		LG		[-]	**PF0131**	87×53×17	OK039/ OK041
2.8 V6	02/02 → 03/08	142	193	ATE		[+]	**PF0142**	156,4×74,2×19,5		LG		[-]	**PF0131**	87×53×17	OK039/ OK041

		KW	CV													
				SiS	i	W.i.	MAGNETI MARELLI	W×H×Th (mm)	Extra kit [Opt]	SiS	i	W.i.	MAGNETI MARELLI	W×H×Th (mm)	Extra kit [Opt]
SKODA															
Superb Berlina II (3T4)															
1.4 TSI	07/08→	92	125	ATE		[+]	**PF0135**	155,1×66×20,1		LG		[-]	**PF0133**	105,5×56×17	OK039/ OK085
1.4 TSI	07/08→	92	125	ATE		[+]	**PF0132**	146×54,7×19,5		BSC	1KS/ØDisc 272×16	[-]	**PF0441**	109,2×53,3×17,5	OK033
1.6 TDI	09/10→	77	105	ATE		[+]	**PF0135**	155,1×66×20,1		LG		[-]	**PF0133**	105,5×56×17	OK039/ OK085
1.6 TDI	09/10→	77	105	ATE		[+]	**PF0132**	146×54,7×19,5		BSC	1KS/ØDisc 272×16	[-]	**PF0441**	109,2×53,3×17,5	OK033
1.8 TSI	03/09→	112	152	ATE		[+]	**PF0135**	155,1×66×20,1		LG		[-]	**PF0133**	105,5×56×17	OK039/ OK085
1.8 TSI	03/09→	112	152	ATE		[+]	**PF0132**	146×54,7×19,5		BSC	1KS/ØDisc 272×16	[-]	**PF0441**	109,2×53,3×17,5	OK033
1.8 TSI	03/08→	118	160	ATE		[+]	**PF0135**	155,1×66×20,1		LG		[-]	**PF0133**	105,5×56×17	OK039/ OK085
1.8 TSI	03/08→	118	160	ATE		[+]	**PF0132**	146×54,7×19,5		BSC	1KS/ØDisc 272×16	[-]	**PF0441**	109,2×53,3×17,5	OK033
1.8 TSI 4x4	03/09→	112	152	ATE		[+]	**PF0135**	155,1×66×20,1		LG		[-]	**PF0133**	105,5×56×17	OK039/ OK085
1.8 TSI 4x4	03/09→	112	152	ATE		[+]	**PF0132**	146×54,7×19,5		BSC	1KS/ØDisc 272×16	[-]	**PF0441**	109,2×53,3×17,5	OK033
1.8 TSI 4x4	11/08→	118	160	ATE		[+]	**PF0135**	155,1×66×20,1		LG		[-]	**PF0133**	105,5×56×17	OK039/ OK085
1.8 TSI 4x4	11/08→	118	160	ATE		[+]	**PF0132**	146×54,7×19,5		BSC	1KS/ØDisc 272×16	[-]	**PF0441**	109,2×53,3×17,5	OK033
1.9 TDI	03/08→	77	105	ATE		[+]	**PF0135**	155,1×66×20,1		LG		[-]	**PF0133**	105,5×56×17	OK039/ OK085
1.9 TDI	03/08→	77	105	ATE		[+]	**PF0132**	146×54,7×19,5		BSC	1KS/ØDisc 272×16	[-]	**PF0441**	109,2×53,3×17,5	OK033
2.0 TDI	03/08→	103	140	ATE		[+]	**PF0135**	155,1×66×20,1		LG		[-]	**PF0133**	105,5×56×17	OK039/ OK085
2.0 TDI	03/08→	103	140	ATE		[+]	**PF0132**	146×54,7×19,5		BSC	1KS/ØDisc 272×16	[-]	**PF0441**	109,2×53,3×17,5	OK033
2.0 TDI	07/08→	125	170	ATE	Ø Disc 345	[+]	**PF0606**	156,5×72,9×20		LG		[-]	**PF0133**	105,5×56×17	OK039/ OK085
2.0 TDI	07/08→	125	170	ATE		[+]	**PF0135**	155,1×66×20,1		BSC	1KS/ØDisc 272×16	[-]	**PF0441**	109,2×53,3×17,5	OK033
2.0 TDI 16V	01/09→	103	140	ATE	Ø Disc 345	[+]	**PF0606**	156,5×72,9×20		LG		[-]	**PF0133**	105,5×56×17	OK039/ OK085
2.0 TDI 16V	01/09→	103	140	ATE		[+]	**PF0135**	155,1×66×20,1		BSC	1KS/ØDisc 272×16	[-]	**PF0441**	109,2×53,3×17,5	OK033
2.0 TDI 16V 4x4	11/10→	103	140	ATE	Ø Disc 345	[+]	**PF0606**	156,5×72,9×20		LG		[-]	**PF0133**	105,5×56×17	OK039/ OK085
2.0 TDI 16V 4x4	11/10→	103	140	ATE		[+]	**PF0135**	155,1×66×20,1		BSC	1KS/ØDisc 272×16	[-]	**PF0441**	109,2×53,3×17,5	OK033

		KW	CV													
				SiS	i	W.i.	MAGNETI MARELLI	W×H×Th (mm)	Extra kit [Opt]	SiS	i	W.i.	MAGNETI MARELLI	W×H×Th (mm)	Extra kit [Opt]
SKODA															
Superb Berlina II (3T4)															
2.0 TDI 4x4	09/08 →	125	170	ATE	Ø Disc 345	[+]	**PF0606**	156,5×72,9×20		LG		[-]	**PF0133**	105,5×56×17	OK039/ OK085
2.0 TDI 4x4	09/08 →	125	170	ATE		[+]	**PF0135**	155,1×66×20,1		BSC	1KS/ØDisc 272×16	[-]	**PF0441**	109,2×53,3×17,5	OK033
2.0 TSI	05/10 →	147	200	ATE	Ø Disc 345	[+]	**PF0606**	156,5×72,9×20		LG		[-]	**PF0133**	105,5×56×17	OK039/ OK085
2.0 TSI	05/10 →	147	200	ATE		[+]	**PF0135**	155,1×66×20,1		BSC	1KS/ØDisc 272×16	[-]	**PF0441**	109,2×53,3×17,5	OK033
3.6 FSI 4x4	04/09 →	191	260	ATE	Ø Disc 345	[+]	**PF0606**	156,5×72,9×20		LG		[-]	**PF0133**	105,5×56×17	OK039/ OK085
3.6 FSI 4x4	04/09 →	191	260	ATE		[+]	**PF0135**	155,1×66×20,1		BSC	1KS/ØDisc 272×16	[-]	**PF0441**	109,2×53,3×17,5	OK033
3.6 V6 4x4	11/08 →	191	260	ATE	Ø Disc 345	[+]	**PF0606**	156,5×72,9×20		LG		[-]	**PF0133**	105,5×56×17	OK039/ OK085
3.6 V6 4x4	11/08 →	191	260	ATE		[+]	**PF0135**	155,1×66×20,1		BSC	1KS/ØDisc 272×16	[-]	**PF0441**	109,2×53,3×17,5	OK033
Superb SW II (3T5)															
1.4 TSI	10/09 →	92	125	ATE		[+]	**PF0135**	155,1×66×20,1		LG		[-]	**PF0133**	105,5×56×17	OK039/ OK085
1.4 TSI	10/09 →	92	125	ATE		[+]	**PF0132**	146×54,7×19,5		BSC	1KS/ØDisc 272×16	[-]	**PF0441**	109,2×53,3×17,5	OK033
1.6 TDI	09/10 →	77	105	ATE		[+]	**PF0135**	155,1×66×20,1		LG		[-]	**PF0133**	105,5×56×17	OK039/ OK085
1.6 TDI	09/10 →	77	105	ATE		[+]	**PF0132**	146×54,7×19,5		BSC	1KS/ØDisc 272×16	[-]	**PF0441**	109,2×53,3×17,5	OK033
1.8 TSI	10/09 →	112	152	ATE		[+]	**PF0135**	155,1×66×20,1		LG		[-]	**PF0133**	105,5×56×17	OK039/ OK085
1.8 TSI	10/09 →	112	152	ATE		[+]	**PF0132**	146×54,7×19,5		BSC	1KS/ØDisc 272×16	[-]	**PF0441**	109,2×53,3×17,5	OK033
1.8 TSI	10/09 →	118	160	ATE		[+]	**PF0135**	155,1×66×20,1		LG		[-]	**PF0133**	105,5×56×17	OK039/ OK085
1.8 TSI	10/09 →	118	160	ATE		[+]	**PF0132**	146×54,7×19,5		BSC	1KS/ØDisc 272×16	[-]	**PF0441**	109,2×53,3×17,5	OK033
1.8 TSI 4x4	10/09 →	112	152	ATE		[+]	**PF0135**	155,1×66×20,1		LG		[-]	**PF0133**	105,5×56×17	OK039/ OK085
1.8 TSI 4x4	10/09 →	112	152	ATE		[+]	**PF0132**	146×54,7×19,5		BSC	1KS/ØDisc 272×16	[-]	**PF0441**	109,2×53,3×17,5	OK033
1.8 TSI 4x4	10/09 →	118	160	ATE		[+]	**PF0135**	155,1×66×20,1		LG		[-]	**PF0133**	105,5×56×17	OK039/ OK085
1.8 TSI 4x4	10/09 →	118	160	ATE		[+]	**PF0132**	146×54,7×19,5		BSC	1KS/ØDisc 272×16	[-]	**PF0441**	109,2×53,3×17,5	OK033
1.9 TDI	10/09 → 11/10	77	105	ATE		[+]	**PF0135**	155,1×66×20,1		LG		[-]	**PF0133**	105,5×56×17	OK039/ OK085

		KW	CV	SiS	i	W.i.	MAGNETI MARELLI	W×H×Th (mm)	Extra kit [Opt]	SiS	i	W.i.	MAGNETI MARELLI	W×H×Th (mm)	Extra kit [Opt]
SKODA															
Superb SW II (3T5)															
1.9 TDI	10/09 → 11/10	77	105	ATE		[+]	**PF0132**	146×54,7×19,5		BSC	1KS/ØDisc 272×16	[-]	**PF0441**	109,2×53,3×17,5	OK033
2.0 TDI	10/09 →	125	170	ATE		[+]	**PF0135**	155,1×66×20,1		LG		[-]	**PF0133**	105,5×56×17	OK039/ OK085
2.0 TDI	10/09 →	125	170	ATE		[+]	**PF0132**	146×54,7×19,5		BSC	1KS/ØDisc 272×16	[-]	**PF0441**	109,2×53,3×17,5	OK033
2.0 TDI	10/09 →	103	140	ATE		[+]	**PF0135**	155,1×66×20,1		LG		[-]	**PF0133**	105,5×56×17	OK039/ OK085
2.0 TDI	10/09 →	103	140	ATE	Ø Disc 345	[+]	**PF0606**	156,5×72,9×20		BSC	1KS/ØDisc 272×16	[-]	**PF0441**	109,2×53,3×17,5	OK033
2.0 TDI 16V 4x4	11/10 →	103	140	ATE		[+]	**PF0135**	155,1×66×20,1		LG		[-]	**PF0133**	105,5×56×17	OK039/ OK085
2.0 TDI 16V 4x4	11/10 →	103	140	ATE	Ø Disc 345	[+]	**PF0606**	156,5×72,9×20		BSC	1KS/ØDisc 272×16	[-]	**PF0441**	109,2×53,3×17,5	OK033
2.0 TDI 4x4	10/09 →	125	170	ATE		[+]	**PF0135**	155,1×66×20,1		LG		[-]	**PF0133**	105,5×56×17	OK039/ OK085
2.0 TDI 4x4	10/09 →	125	170	ATE	Ø Disc 345	[+]	**PF0606**	156,5×72,9×20		BSC	1KS/ØDisc 272×16	[-]	**PF0441**	109,2×53,3×17,5	OK033
2.0 TSI	05/10 →	147	200	ATE		[+]	**PF0135**	155,1×66×20,1		LG		[-]	**PF0133**	105,5×56×17	OK039/ OK085
2.0 TSI	05/10 →	147	200	ATE	Ø Disc 345	[+]	**PF0606**	156,5×72,9×20		BSC	1KS/ØDisc 272×16	[-]	**PF0441**	109,2×53,3×17,5	OK033
3.6 V6 4x4	10/09 →	191	260	ATE		[+]	**PF0135**	155,1×66×20,1		LG		[-]	**PF0133**	105,5×56×17	OK039/ OK085
3.6 V6 4x4	10/09 →	191	260	ATE	Ø Disc 345	[+]	**PF0606**	156,5×72,9×20		BSC	1KS/ØDisc 272×16	[-]	**PF0441**	109,2×53,3×17,5	OK033
Yeti (5L)															
1.2 TSI	09/09 →	77	105	ATE	1ZE	[+]	**PF0135**	155,1×66×20,1		LG		[-]	**PF0133**	105,5×56×17	OK039/ OK085
1.2 TSI	09/09 →	77	105	ATE	1ZF	[+]	**PF0132**	146×54,7×19,5		BSC	1KS/ØDisc 272×16	[-]	**PF0441**	109,2×53,3×17,5	OK033
1.4 TSI	06/10 →	90	122	ATE	1ZE	[+]	**PF0135**	155,1×66×20,1		LG		[-]	**PF0133**	105,5×56×17	OK039/ OK085
1.4 TSI	06/10 →	90	122	ATE	1ZF	[+]	**PF0132**	146×54,7×19,5		BSC	1KS/ØDisc 272×16	[-]	**PF0441**	109,2×53,3×17,5	OK033
1.6 TDI	11/10 →	77	105	ATE	1ZE	[+]	**PF0135**	155,1×66×20,1		LG		[-]	**PF0133**	105,5×56×17	OK039/ OK085
1.6 TDI	11/10 →	77	105	ATE	1ZF	[+]	**PF0132**	146×54,7×19,5		BSC	1KS/ØDisc 272×16	[-]	**PF0441**	109,2×53,3×17,5	OK033
1.8 TSI 4x4	11/09 →	112	152	ATE	1ZE	[+]	**PF0135**	155,1×66×20,1		LG		[-]	**PF0133**	105,5×56×17	OK039/ OK085
1.8 TSI 4x4	11/09 →	112	152	ATE	1ZF	[+]	**PF0132**	146×54,7×19,5		BSC	1KS/ØDisc 272×16	[-]	**PF0441**	109,2×53,3×17,5	OK033

		KW	CV													
				SiS	i	W.i.	MAGNETI MARELLI	W×H×Th (mm)	Extra kit [Opt]	SiS	i	W.i.	MAGNETI MARELLI	W×H×Th (mm)	Extra kit [Opt]
SKODA															
Yeti (5L)															
1.8 TSI 4x4	05/09→	118	160	ATE	1ZE	[+]	**PF0135**	155,1×66×20,1		LG		[-]	**PF0133**	105,5×56×17	OK039/ OK085
1.8 TSI 4x4	05/09→	118	160	ATE	1ZF	[+]	**PF0132**	146×54,7×19,5		BSC	1KS/ØDisc 272×16	[-]	**PF0441**	109,2×53,3×17,5	OK033
2.0 TDI	11/11→	103	140	ATE	1ZE	[+]	**PF0135**	155,1×66×20,1		LG		[-]	**PF0133**	105,5×56×17	OK039/ OK085
2.0 TDI	11/11→	103	140	ATE	1ZF	[+]	**PF0132**	146×54,7×19,5		BSC	1KS/ØDisc 272×16	[-]	**PF0441**	109,2×53,3×17,5	OK033
2.0 TDI	11/09→	81	110	ATE	1ZE	[+]	**PF0135**	155,1×66×20,1		LG		[-]	**PF0133**	105,5×56×17	OK039/ OK085
2.0 TDI	11/09→	81	110	ATE	1ZF	[+]	**PF0132**	146×54,7×19,5		BSC	1KS/ØDisc 272×16	[-]	**PF0441**	109,2×53,3×17,5	OK033
2.0 TDI 4x4	11/09→	81	110	ATE	1ZE	[+]	**PF0135**	155,1×66×20,1		LG		[-]	**PF0133**	105,5×56×17	OK039/ OK085
2.0 TDI 4x4	11/09→	81	110	ATE	1ZF	[+]	**PF0132**	146×54,7×19,5		BSC	1KS/ØDisc 272×16	[-]	**PF0441**	109,2×53,3×17,5	OK033
2.0 TDI 4x4	05/09→	103	140	ATE	1ZE	[+]	**PF0135**	155,1×66×20,1		LG		[-]	**PF0133**	105,5×56×17	OK039/ OK085
2.0 TDI 4x4	05/09→	103	140	ATE	1ZF	[+]	**PF0132**	146×54,7×19,5		BSC	1KS/ØDisc 272×16	[-]	**PF0441**	109,2×53,3×17,5	OK033
2.0 TDI 4x4	11/09→	125	170	ATE	1ZE	[+]	**PF0135**	155,1×66×20,1		LG		[-]	**PF0133**	105,5×56×17	OK039/ OK085
2.0 TDI 4x4	11/09→	125	170	ATE	1ZF	[+]	**PF0132**	146×54,7×19,5		BSC	1KS/ØDisc 272×16	[-]	**PF0441**	109,2×53,3×17,5	OK033
SMART (MCC)															
forfour (454)															
1.1	02/05→	47	64	LG		[+]	**PF0334**	130×72,6×15,5	OK012	LG		[+]	**PF0522**	87×47×15	OK030
1.1	01/04→	55	75	LG	(454.030)	[+]	**PF0334**	130×72,6×15,5	OK012	LG		[+]	**PF0522**	87×47×15	OK030
1.3	01/04→	70	95	LG	(454.031)	[+]	**PF0334**	130×72,6×15,5	OK012	LG		[+]	**PF0522**	87×47×15	OK030
1.5	01/04→	90	122	LG		[+]	**PF0334**	130×72,6×15,5	OK012	LG		[+]	**PF0522**	87×47×15	OK030
1.5	01/04→	80	109	LG	(454.032)	[+]	**PF0334**	130×72,6×15,5	OK012	LG		[+]	**PF0522**	87×47×15	OK030
1.5 BRABUS	05/05→	130	177	LG	(454.034)	[+]	**PF0334**	130×72,6×15,5	OK012	LG		[+]	**PF0522**	87×47×15	OK030
1.5 CDI	09/04→	50	68	LG	(454.000)	[+]	**PF0334**	130×72,6×15,5	OK012	LG		[+]	**PF0522**	87×47×15	OK030
1.5 CDI	09/04→	70	95	LG	(454.001)	[+]	**PF0334**	130×72,6×15,5	OK012	LG		[+]	**PF0522**	87×47×15	OK030
fortwo Cabrio															
0.7	01/04→	45	61	BSC	(450.432)	[+]	**PF0398**	90×70×15,5	OK012						
0.7	01/04→	55	75	BSC	(450.433)	[+]	**PF0398**	90×70×15,5	OK012						
0.8 CDI	01/04→	30	41	BSC	(450.400)	[+]	**PF0398**	90×70×15,5	OK012						
0.8 CDi	01/07→	33	45	BSC	(451.400)	[+]	**PF0398**	90×70×15,5	OK012						
0.8 CDi	08/09→	40	54	BSC	(451.401)	[+]	**PF0398**	90×70×15,5	OK012						
1.0	01/07→	52	71	BSC	(451.431)	[+]	**PF0398**	90×70×15,5	OK012						
1.0 Brabus	01/08→	72	98	BSC	(451.433)	[+]	**PF0398**	90×70×15,5	OK012						
1.0 Turbo	01/07→	62	84	BSC	(451.432)	[+]	**PF0398**	90×70×15,5	OK012						

		KW	CV	SiS	i	W.i.	MAGNETI MARELLI	W×H×Th (mm)	Extra kit [Opt]	SiS	i	W.i.	MAGNETI MARELLI	W×H×Th (mm)	Extra kit [Opt]
SMART (MCC)															
fortwo Cabrio															
1.0 Turbo Brabus	07/10→	75	102	BSC	(451.433)	[+]	**PF0398**	90×70×15,5	OK012						
electric drive	12/10→	20	27	BSC		[+]	**PF0398**	90×70×15,5	OK012						
fortwo Coupé															
0.7	01/04→	37	50	BSC	(450.330)	[+]	**PF0398**	90×70×15,5	OK012						
0.7	01/04→	45	61	BSC	(450.332)	[+]	**PF0398**	90×70×15,5	OK012						
0.7	01/04→	55	75	BSC	(450.333)	[+]	**PF0398**	90×70×15,5	OK012						
0.8 CDI	01/04→	30	41	BSC	(450.300)	[+]	**PF0398**	90×70×15,5	OK012						
0.8 CDi	01/07→	33	45	BSC	(451.300)	[+]	**PF0398**	90×70×15,5	OK012						
0.8 CDi	08/09→	40	54	BSC	(451.391)	[+]	**PF0398**	90×70×15,5	OK012						
1.0	01/07→	45	61	BSC	(451.330, 451.334)	[+]	**PF0398**	90×70×15,5	OK012						
1.0	01/07→	52	71	BSC	(451.331, 451.380)	[+]	**PF0398**	90×70×15,5	OK012						
1.0 Brabus	01/08→	72	98	BSC	(451.333)	[+]	**PF0398**	90×70×15,5	OK012						
1.0 Turbo	01/07→	62	84	BSC	(451.332)	[+]	**PF0398**	90×70×15,5	OK012						
1.0 Turbo Brabus	07/10→	75	102	BSC	(451.333)	[+]	**PF0398**	90×70×15,5	OK012						
electric drive	12/10→	20	27	BSC	(451.391)	[+]	**PF0398**	90×70×15,5	OK012						
Smart City (MC01)															
0.6	01/01→01/04	45	61	BSC		[+]	**PF0398**	90×70×15,5	OK012						
0.6	06/02→01/04	52	71	BSC		[+]	**PF0398**	90×70×15,5	OK012						
0.6	07/98→01/04	40	55	BSC	(S1CLA1)	[+]	**PF0398**	90×70×15,5	OK012						
0.6	07/98→01/04	33	45	BSC	(S1CLB1)	[+]	**PF0398**	90×70×15,5	OK012						
0.7	01/03→01/04	37	50	BSC		[+]	**PF0398**	90×70×15,5	OK012						
0.7	01/03→01/04	45	61	BSC		[+]	**PF0398**	90×70×15,5	OK012						
0.7	01/03→01/04	55	75	BSC		[+]	**PF0398**	90×70×15,5	OK012						
0.8 CDI	11/99→01/04	30	41	BSC	(S1CLC1)	[+]	**PF0398**	90×70×15,5	OK012						
Smart Cabrio															
0.6	06/02→01/04	52	71	BSC		[+]	**PF0398**	90×70×15,5	OK012						
0.6	03/00→01/04	40	55	BSC	(S1OLA1)	[+]	**PF0398**	90×70×15,5	OK012						
0.6	01/01→01/04	45	61	BSC	(S1OLD2)	[+]	**PF0398**	90×70×15,5	OK012						
0.7	01/03→01/04	45	61	BSC		[+]	**PF0398**	90×70×15,5	OK012						
0.7	01/03→01/04	55	75	BSC		[+]	**PF0398**	90×70×15,5	OK012						
0.8 CDI	03/01→01/04	30	41	BSC	(S1OLC1)	[+]	**PF0398**	90×70×15,5	OK012						
Smart CrossBlade															
0.6	06/02→	52	71	BSC		[+]	**PF0398**	90×70×15,5	OK012						
Smart RoadSter															
0.7	04/03→	45	61	BSC	(452.432)	[+]	**PF0398**	90×70×15,5	OK012						
0.7	04/03→	60	82	BSC	(452.434)	[+]	**PF0398**	90×70×15,5	OK012						
0.7 Brabus	12/03→	74	101	BSC	(452.437)	[+]	**PF0398**	90×70×15,5	OK012						

		KW	CV	SiS	i	W.i.	MAGNETI MARELLI	W×H×Th (mm)	Extra kit [Opt]	SiS	i	W.i.	MAGNETI MARELLI	W×H×Th (mm)	Extra kit [Opt]
SMART (MCC)															
Smart RoadSter Coupé															
0.7	06/03 →	45	61	BSC	(452.332)	[+]	**PF0398**	90×70×15,5	OK012						
0.7	04/03 →	60	82	BSC	(452.334)	[+]	**PF0398**	90×70×15,5	OK012						
0.7 Brabus	12/03 →	74	101	BSC	(452.337)	[+]	**PF0398**	90×70×15,5	OK012						
SSANGYONG															
Actyon															
2.0 Xdi	11/05 →	104	141	AK		[+]	**PF0282**	149×58,1×17							
2.3	11/06 →	110	150	AK		[+]	**PF0282**	149×58,1×17							
2.3 4x4	11/06 →	110	150	AK		[+]	**PF0282**	149×58,1×17							
200 Xdi 4WD	10/06 →	104	141	AK		[+]	**PF0282**	149×58,1×17							
Actyon Pickup															
2.0 Xdi 4WD	04/07 →	104	141	AK		[+]	**PF0282**	149×58,1×17							
Korando															
2.0 e-XDi	11/10 →	129	175	MN		[+]	**PF0767**	156,8×60,7×17		AK	Europa	[+]	**PF0751**	99,9×41×15,5	
2.0 e-XDi 4x4	11/10 →	129	175	MN		[+]	**PF0767**	156,8×60,7×17		AK	Europa	[+]	**PF0751**	99,9×41×15,5	
Rexton (GAB_)															
2.3 RX230 4x4	05/02 →	110	150	AK		[+]	**PF0282**	149×58,1×17							
2.7 D 4x4	05/06 →	137	186	AK		[+]	**PF0282**	149×58,1×17							
2.7 Xdi	08/04 →	120	163	AK		[+]	**PF0282**	149×58,1×17							
2.7 Xdi	03/05 → 08/06	121	165	AK		[+]	**PF0282**	149×58,1×17							
2.7 Xdi 4x4	03/11 →	118	160	AK		[+]	**PF0282**	149×58,1×17							
2.7 Xdi Turbo 4x4	03/11 →	132	180	AK		[+]	**PF0282**	149×58,1×17							
2.8 4x4	03/03 → 06/06	201	273	ST		[+]	**PF0468**	137×54,3×17							
2.8 RX280 4x4	03/03 →	142	193	ST		[+]	**PF0468**	137×54,3×17							
2.9 TD	04/02 →	88	120	ST		[+]	**PF0468**	137×54,3×17							
3.2	04/02 →	162	220	ST		[+]	**PF0468**	137×54,3×17							
SUBARU															
BRZ															
2.0	06/12 →	147	200	TOK		[+]	**PF0399**	137×56,8×17,5							
Forester II (SG)															
2.0	09/02 →	92	125	TOK		[+]	**PF0399**	137×56,8×17,5							
2.0 S Turbo	09/02 →	130	177	TOK		[+]	**PF0399**	137×56,8×17,5							
2.0 X	09/05 →	116	158	TOK		[+]	**PF0399**	137×56,8×17,5							
2.5	12/03 →	155	211	TOK		[+]	**PF0399**	137×56,8×17,5							
2.5 All-wheel Drive	07/05 →	121	165	TOK		[+]	**PF0399**	137×56,8×17,5							
2.5 RX Nato AWD	11/02 → 08/05	115	156	TOK		[+]	**PF0399**	137×56,8×17,5							
2.5 XT	09/05 →	169	230	TOK		[+]	**PF0399**	137×56,8×17,5							




KW	CV	SiS	i	W.i.	MAGNETI MARELLI	W×H×Th (mm)	Extra kit [Opt]	SiS	i	W.i.	MAGNETI MARELLI	W×H×Th (mm)	Extra kit [Opt]
SUBARU													
Forester III (SH)													
2.0	01/10→	110	150	TOK		[+]	**PF0399**	137×56,8×17,5									
2.0	01/10→	110	150	TOK		[+]	**PF0399**	137×56,8×17,5		AK		[+]	**PF0700**	110,3×37,4×14	
2.0	01/08→	110	150	TOK		[+]	**PF0399**	137×56,8×17,5									
2.0	01/08→	110	150	TOK		[+]	**PF0399**	137×56,8×17,5		AK		[+]	**PF0700**	110,3×37,4×14	
2.0 D	09/08→	108	147	TOK		[+]	**PF0399**	137×56,8×17,5									
2.0 D	09/08→	108	147	TOK		[+]	**PF0399**	137×56,8×17,5		AK		[+]	**PF0700**	110,3×37,4×14	
2.5	01/09→	126	171	TOK		[+]	**PF0399**	137×56,8×17,5									
2.5	01/09→	126	171	TOK		[+]	**PF0399**	137×56,8×17,5		AK		[+]	**PF0700**	110,3×37,4×14	
2.5	06/08→	169	230	TOK		[+]	**PF0399**	137×56,8×17,5									
2.5	06/08→	169	230	TOK		[+]	**PF0399**	137×56,8×17,5		AK		[+]	**PF0700**	110,3×37,4×14	
Forester IV (SJ)													
2.0	03/13→	110	150	TOK		[+]	**PF0399**	137×56,8×17,5		AK		[+]	**PF0700**	110,3×37,4×14	
2.0 D	03/13→	108	147	TOK		[+]	**PF0399**	137×56,8×17,5		AK		[+]	**PF0700**	110,3×37,4×14	
2.0 XT	03/13→	177	241	TOK		[+]	**PF0399**	137×56,8×17,5		AK		[+]	**PF0700**	110,3×37,4×14	
Impreza II SW (GD;GG)													
1.5	05/06→	77	105	TOK		[+]	**PF0399**	137×56,8×17,5									
1.5	06/01→08/05	74	101	TOK		[+]	**PF0399**	137×56,8×17,5									
1.5	10/05→	81	110	TOK		[+]	**PF0399**	137×56,8×17,5									
1.5 AWD	10/05→	81	110	TOK		[+]	**PF0399**	137×56,8×17,5									
2.0	12/00→	92	125	TOK		[+]	**PF0399**	137×56,8×17,5									
2.0 AWD	10/05→	184	250	TOK		[+]	**PF0399**	137×56,8×17,5									
2.0 R	09/05→	118	160	TOK		[+]	**PF0399**	137×56,8×17,5									
Impreza II SW (GF)													
1.5	10/05→	81	110	TOK		[+]	**PF0399**	137×56,8×17,5									
1.5 AWD	10/05→	81	110	TOK		[+]	**PF0399**	137×56,8×17,5									
1.5 L	09/98→09/00	66	90	TOK		[+]	**PF0399**	137×56,8×17,5									
1.5 L	11/95→08/98	70	95	TOK		[+]	**PF0399**	137×56,8×17,5									
1.6	01/93→08/98	66	90	TOK		[+]	**PF0399**	137×56,8×17,5									
1.6 i	06/98→12/00	70	95	TOK		[+]	**PF0399**	137×56,8×17,5									
1.6 i 4WD	06/98→12/00	70	95	TOK		[+]	**PF0399**	137×56,8×17,5									
1.6 i 4WD	08/92→12/00	66	90	TOK		[+]	**PF0399**	137×56,8×17,5									
1.8	11/95→06/96	76	103	TOK		[+]	**PF0399**	137×56,8×17,5									
1.8 i 4WD	08/92→12/00	76	103	TOK		[+]	**PF0399**	137×56,8×17,5									
2.0	09/96→08/98	85	116	TOK		[+]	**PF0399**	137×56,8×17,5									
2.0	09/98→09/00	92	125	TOK		[+]	**PF0399**	137×56,8×17,5									
2.0 4WD	12/95→12/00	85	115	TOK		[+]	**PF0399**	137×56,8×17,5									
2.0 AWD	10/05→	184	250	TOK		[+]	**PF0399**	137×56,8×17,5									
2.0 16V AWD	06/98→12/00	92	125	TOK		[+]	**PF0399**	137×56,8×17,5									
Impreza III Hatchback (GR)													
1.5	02/08→13	79	107	AK		[+]	**PF0400**	137×54×16,8		AK		[+]	**PF0700**	110,3×37,4×14	
1.5	02/08→13	79	107	TOK		[+]	**PF0399**	137×56,8×17,5									
1.5 All-wheel Drive	02/08→13	79	107	AK		[+]	**PF0400**	137×54×16,8		AK		[+]	**PF0700**	110,3×37,4×14	

		KW	CV	SiS	i	W.i.	MAGNETI MARELLI	W×H×Th (mm)	Extra kit [Opt]	SiS	i	W.i.	MAGNETI MARELLI	W×H×Th (mm)	Extra kit [Opt]
SUBARU															
Impreza III Hatchback (GR)															
1.5 All-wheel Drive	02/08 → 13	79	107	TOK		[+]	**PF0399**	137×56,8×17,5							
2.0	02/08 → 13	110	150	AK		[+]	**PF0400**	137×54×16,8		AK		[+]	**PF0700**	110,3×37,4×14	
2.0	02/08 → 13	110	150	TOK		[+]	**PF0399**	137×56,8×17,5							
2.0 All-wheel Drive	01/08 → 13	110	150	AK		[+]	**PF0400**	137×54×16,8		AK		[+]	**PF0700**	110,3×37,4×14	
2.0 All-wheel Drive	01/08 → 13	110	150	TOK		[+]	**PF0399**	137×56,8×17,5							
2.0 D All-wheel Drive	01/09 → 13	110	150	AK		[+]	**PF0400**	137×54×16,8		AK		[+]	**PF0700**	110,3×37,4×14	
2.0 D All-wheel Drive	01/09 → 13	110	150	TOK		[+]	**PF0399**	137×56,8×17,5							
2.5	02/08 → 13	221	301	AK		[+]	**PF0400**	137×54×16,8		AK		[+]	**PF0700**	110,3×37,4×14	
2.5	02/08 → 13	221	301	TOK		[+]	**PF0399**	137×56,8×17,5							
2.5 All-wheel Drive	01/08 → 13	169	230	AK		[+]	**PF0400**	137×54×16,8		AK		[+]	**PF0700**	110,3×37,4×14	
2.5 All-wheel Drive	01/08 → 13	169	230	TOK		[+]	**PF0399**	137×56,8×17,5							
2.5 All-wheel Drive	01/08 → 13	221	301	AK		[+]	**PF0400**	137×54×16,8		AK		[+]	**PF0700**	110,3×37,4×14	
2.5 All-wheel Drive	01/08 → 13	221	301	TOK		[+]	**PF0399**	137×56,8×17,5							
2.5 STI CS400	04/10 → 13	294	400	AK		[+]	**PF0400**	137×54×16,8		AK		[+]	**PF0700**	110,3×37,4×14	
2.5 STI CS400	04/10 → 13	294	400	TOK		[+]	**PF0399**	137×56,8×17,5							
Impreza III 3 Volumi (GR)															
1.5	02/08 → 13	79	107	AK		[+]	**PF0400**	137×54×16,8		AK		[+]	**PF0700**	110,3×37,4×14	
1.5 All-wheel Drive	02/08 → 13	79	107	TOK		[+]	**PF0399**	137×56,8×17,5							
Justy II (JMA, MS)															
1.3 4x4	04/01 → 11/03	63	86	BSC		[+]	**PF0549**	131×44,2×15,5							
1.3 GX 4x4	10/95 → 11/03	50	68	BSC		[+]	**PF0549**	131×44,2×15,5							
Justy III (G3X)															
1.3	09/03 →	69	94	BSC		[+]	**PF0549**	131×44,2×15,5							
1.5	09/03 →	73	99	BSC		[+]	**PF0549**	131×44,2×15,5							
Justy IV															
1.0	01/07 →	51	69	LG		[-]	**PF0254**	125,7×51.4×16,5	OK033/ OK084						
Legacy Berlina III Berlina (BE;BH)															
2.0	04/99 → 08/03	92	125	TOK		[+]	**PF0399**	137×56,8×17,5							
2.0 AWD	06/02 → 08/03	206	280	TOK		[+]	**PF0399**	137×56,8×17,5							
2.0 RSK AWD	08/00 → 08/03	191	260	TOK		[+]	**PF0399**	137×56,8×17,5							
2.5	10/98 → 08/03	115	156	TOK		[+]	**PF0399**	137×56,8×17,5							
3.0 H6 AWD	08/00 → 08/03	154	209	TOK		[+]	**PF0399**	137×56,8×17,5							

		KW	CV	SiS	i	W.i.	MAGNETI MARELLI	W×H×Th (mm)	Extra kit [Opt]	SiS	i	W.i.	MAGNETI MARELLI	W×H×Th (mm)	Extra kit [Opt]
SUBARU															
Legacy Berlina III SW (BE;BH)															
2.0	12/98 → 08/03	92	125	TOK		[+]	**PF0399**	137×56,8×17,5							
2.0 AWD	06/02 → 08/03	206	280	TOK		[+]	**PF0399**	137×56,8×17,5							
2.0 RSK AWD	08/00 → 08/03	191	260	TOK		[+]	**PF0399**	137×56,8×17,5							
2.5	12/98 → 08/03	115	156	TOK		[+]	**PF0399**	137×56,8×17,5							
3.0 H6 AWD	08/00 → 08/03	154	209	TOK		[+]	**PF0399**	137×56,8×17,5							
Legacy Outback															
2.5	10/00 → 03			TOK		[+]	**PF0399**	137×56,8×17,5							
3.0 V6	10/00 → 03			TOK		[+]	**PF0399**	137×56,8×17,5							
Legacy Berlina IV															
2.0	09/03 →	101	138	TOK		[+]	**PF0399**	137×56,8×17,5							
2.0	09/03 →	101	138							AK		[+]	**PF0700**	110,3×37,4×14	
2.0	06/05 →	121	165	TOK		[+]	**PF0399**	137×56,8×17,5							
2.0	06/05 →	121	165							AK		[+]	**PF0700**	110,3×37,4×14	
2.0	06/05 →	132	179	TOK		[+]	**PF0399**	137×56,8×17,5							
2.0	06/05 →	132	179							AK		[+]	**PF0700**	110,3×37,4×14	
2.0	06/05 →	140	190	TOK		[+]	**PF0399**	137×56,8×17,5							
2.0	06/05 →	140	190							AK		[+]	**PF0700**	110,3×37,4×14	
2.0 D	02/08 →	110	150	TOK		[+]	**PF0399**	137×56,8×17,5							
2.0 D	02/08 →	110	150							AK		[+]	**PF0700**	110,3×37,4×14	
2.0 R	09/07 →	110	150	TOK		[+]	**PF0399**	137×56,8×17,5							
2.0 R	09/07 →	110	150							AK		[+]	**PF0700**	110,3×37,4×14	
2.0 Turbo AWD	09/03 → 11/06	180	245	TOK		[+]	**PF0399**	137×56,8×17,5							
2.0 Turbo AWD	09/03 → 11/06	180	245							AK		[+]	**PF0700**	110,3×37,4×14	
2.5	09/03 →	121	165	TOK		[+]	**PF0399**	137×56,8×17,5							
2.5	09/03 →	121	165							AK		[+]	**PF0700**	110,3×37,4×14	
2.5 i	09/07 →	127	173	TOK		[+]	**PF0399**	137×56,8×17,5							
2.5 i	09/07 →	127	173							AK		[+]	**PF0700**	110,3×37,4×14	
2.5 STI AWD	09/06 → 12/09	194	264	TOK		[+]	**PF0399**	137×56,8×17,5							
2.5 STI AWD	09/06 → 12/09	194	264							AK		[+]	**PF0700**	110,3×37,4×14	
2.5 T AWD	09/06 → 12/09	184	250	TOK		[+]	**PF0399**	137×56,8×17,5							
2.5 T AWD	09/06 → 12/09	184	250							AK		[+]	**PF0700**	110,3×37,4×14	
3.0 R	09/03 →	180	245	TOK		[+]	**PF0399**	137×56,8×17,5							
3.0 R	09/03 →	180	245							AK		[+]	**PF0700**	110,3×37,4×14	
Legacy SW IV (B13_)															
2.0	09/03 →	101	138	TOK		[+]	**PF0399**	137×56,8×17,5							
2.0	09/03 →	101	138							AK		[+]	**PF0700**	110,3×37,4×14	
2.0	06/05 →	121	165	TOK		[+]	**PF0399**	137×56,8×17,5							
2.0	06/05 →	121	165							AK		[+]	**PF0700**	110,3×37,4×14	
2.0	06/05 →	132	179	TOK		[+]	**PF0399**	137×56,8×17,5							
2.0	06/05 →	132	179							AK		[+]	**PF0700**	110,3×37,4×14	
2.0	06/05 →	140	190	TOK		[+]	**PF0399**	137×56,8×17,5							
2.0	06/05 →	140	190							AK		[+]	**PF0700**	110,3×37,4×14	

		KW	CV	SiS	i	W.i.	MAGNETI MARELLI	W×H×Th (mm)	Extra kit [Opt]	SiS	i	W.i.	MAGNETI MARELLI	W×H×Th (mm)	Extra kit [Opt]
SUBARU															
Legacy SW IV (B13_)															
2.0 D	02/08 →	110	150	TOK		[+]	**PF0399**	137×56,8×17,5							
2.0 D	02/08 →	110	150							AK		[+]	**PF0700**	110,3×37,4×14	
2.0 R	09/07 →	110	150	TOK		[+]	**PF0399**	137×56,8×17,5							
2.0 R	09/07 →	110	150							AK		[+]	**PF0700**	110,3×37,4×14	
2.0 Turbo AWD	09/03 → 11/06	180	245	TOK		[+]	**PF0399**	137×56,8×17,5							
2.0 Turbo AWD	09/03 → 11/06	180	245							AK		[+]	**PF0700**	110,3×37,4×14	
2.5	09/03 →	121	165	TOK		[+]	**PF0399**	137×56,8×17,5							
2.5	09/03 →	121	165							AK		[+]	**PF0700**	110,3×37,4×14	
2.5 i	01/08 →	127	173	TOK		[+]	**PF0399**	137×56,8×17,5							
2.5 i	01/08 →	127	173							AK		[+]	**PF0700**	110,3×37,4×14	
2.5 STI AWD	09/06 → 12/09	194	264	TOK		[+]	**PF0399**	137×56,8×17,5							
2.5 STI AWD	09/06 → 12/09	194	264							AK		[+]	**PF0700**	110,3×37,4×14	
2.5 T AWD	09/06 → 12/09	184	250	TOK		[+]	**PF0399**	137×56,8×17,5							
2.5 T AWD	09/06 → 12/09	184	250							AK		[+]	**PF0700**	110,3×37,4×14	
3.0 R	09/03 →	180	245	TOK		[+]	**PF0399**	137×56,8×17,5							
3.0 R	09/03 →	180	245							AK		[+]	**PF0700**	110,3×37,4×14	
Legacy V															
2.0 D	09/09 →	110	150	TOK		[+]	**PF0399**	137×56,8×17,5		AK		[+]	**PF0700**	110,3×37,4×14	
2.0 i	09/09 →	110	150	TOK		[+]	**PF0399**	137×56,8×17,5		AK		[+]	**PF0700**	110,3×37,4×14	
2.5 GT	07/10 →	195	265	TOK		[+]	**PF0399**	137×56,8×17,5		AK		[+]	**PF0700**	110,3×37,4×14	
2.5 i	09/09 →	123	167	TOK		[+]	**PF0399**	137×56,8×17,5		AK		[+]	**PF0700**	110,3×37,4×14	
3.6 AWD	09/10 →	191	260	TOK		[+]	**PF0399**	137×56,8×17,5		AK		[+]	**PF0700**	110,3×37,4×14	
Legacy V SW															
2.0 D	09/09 →	110	150	TOK		[+]	**PF0399**	137×56,8×17,5		AK		[+]	**PF0700**	110,3×37,4×14	
2.0 i	09/09 →	110	150	TOK		[+]	**PF0399**	137×56,8×17,5		AK		[+]	**PF0700**	110,3×37,4×14	
2.5 GT	07/10 →	195	265	TOK		[+]	**PF0399**	137×56,8×17,5		AK		[+]	**PF0700**	110,3×37,4×14	
2.5 i	09/09 →	123	167	TOK		[+]	**PF0399**	137×56,8×17,5		AK		[+]	**PF0700**	110,3×37,4×14	
Outback III (BL,BP)															
2.0	09/03 → 10/05	101	137	TOK		[+]	**PF0399**	137×56,8×17,5		AK		[+]	**PF0700**	110,3×37,4×14	
2.0 D	09/08 →	110	150	TOK		[+]	**PF0399**	137×56,8×17,5		AK		[+]	**PF0700**	110,3×37,4×14	
2.5	11/03 →	121	165	TOK		[+]	**PF0399**	137×56,8×17,5		AK		[+]	**PF0700**	110,3×37,4×14	
2.5	09/08 →	127	173	TOK		[+]	**PF0399**	137×56,8×17,5		AK		[+]	**PF0700**	110,3×37,4×14	
3.0	11/03 →	180	245	TOK		[+]	**PF0399**	137×56,8×17,5		AK		[+]	**PF0700**	110,3×37,4×14	
Outback IV (BM,BR)															
2.0 D	09/09 →	110	150	TOK		[+]	**PF0399**	137×56,8×17,5		AK		[+]	**PF0700**	110,3×37,4×14	
2.5 i	09/09 →	123	167	TOK		[+]	**PF0399**	137×56,8×17,5		AK		[+]	**PF0700**	110,3×37,4×14	
3.6 R	09/09 →	191	260	TOK		[+]	**PF0399**	137×56,8×17,5		AK		[+]	**PF0700**	110,3×37,4×14	
Trezia															
1.3	03/11 →	73	99	AK		[-]	**PF0663**	139,1×55,6×17,5		AK		[+]	**PF0629**	98,6×42,5×14,8	
1.4 D	03/11 →	66	90	AK		[-]	**PF0663**	139,1×55,6×17,5		AK		[+]	**PF0629**	98,6×42,5×14,8	
XV															
1.6 i	03/12 →	84	114	TOK		[+]	**PF0399**	137×56,8×17,5		AK		[+]	**PF0700**	110,3×37,4×14	
2.0 i	03/12 →	110	150	TOK		[+]	**PF0399**	137×56,8×17,5		AK		[+]	**PF0700**	110,3×37,4×14	
2.0 D	03/12 →	108	147	TOK		[+]	**PF0399**	137×56,8×17,5		AK		[+]	**PF0700**	110,3×37,4×14	

		KW	CV	SiS	i	W.i.	MAGNETI MARELLI	W×H×Th (mm)	Extra kit [Opt]	SiS	i	W.i.	MAGNETI MARELLI	W×H×Th (mm)	Extra kit [Opt]
SUZUKI															
Alto III (EF)															
1.0	09/94 → 06/02	39	53	AK		[+]	**PF0491**	107,3×44,6×15							
1.0	01/00 →	43	58	AK		[+]	**PF0491**	107,3×44,6×15							
1.3	10/98 → 09/00	63	86	AK		[+]	**PF0491**	107,3×44,6×15							
1.6	10/98 → 09/00	71	97	AK		[+]	**PF0491**	107,3×44,6×15							
Alto IV (FF)															
1.1	06/02 →	46	63	AK		[+]	**PF0491**	107,3×44,6×15							
Alto V (GF)															
1.0	01/09 →	50	68	ST		[+]	**PF0470**	108,7×45,4×16							
Carry (FD)															
0.7	02/99 → 09/04	47	64	ST		[+]	**PF0471**	108,7×45,4×16							
1.3	03/99 →	58	79	ST		[+]	**PF0471**	108,7×45,4×16							
1.3 4x4	02/99 → 09/04	56	76	ST		[+]	**PF0471**	108,7×45,4×16							
1.3 16 V	03/00 →	58	79	ST		[+]	**PF0471**	108,7×45,4×16							
Grand Vitara III (JT)															
1.3	05/05 → 07/06	59	80	ST		[+]	**PF0494**	137,9×54,7×17		AK		[+]	**PF0473**	105,5×38,2×13,7	
1.3	08/06 →	61	83	ST		[+]	**PF0494**	137,9×54,7×17		AK		[+]	**PF0473**	105,5×38,2×13,7	
1.6 All-wheel Drive	04/05 →	78	106	ST		[+]	**PF0494**	137,9×54,7×17		AK		[+]	**PF0473**	105,5×38,2×13,7	
1.6 All-wheel Drive	09/05 →	73	99	ST		[+]	**PF0494**	137,9×54,7×17		AK		[+]	**PF0473**	105,5×38,2×13,7	
1.9 DDiS	10/05 →	95	129	ST		[+]	**PF0494**	137,9×54,7×17		AK		[+]	**PF0473**	105,5×38,2×13,7	
2.0 All-wheel Drive	10/05 →	103	140	ST		[+]	**PF0494**	137,9×54,7×17		AK		[+]	**PF0473**	105,5×38,2×13,7	
2.4 All-wheel Drive	01/09 →	124	169	ST		[+]	**PF0494**	137,9×54,7×17		AK		[+]	**PF0473**	105,5×38,2×13,7	
2.4 All-wheel Drive	01/09 →	122	166	ST		[+]	**PF0494**	137,9×54,7×17		AK		[+]	**PF0473**	105,5×38,2×13,7	
2.7 All-wheel Drive	01/07 →	138	188	ST		[+]	**PF0494**	137,9×54,7×17		AK		[+]	**PF0473**	105,5×38,2×13,7	
2.7 All-wheel Drive	01/07 →	135	184	ST		[+]	**PF0494**	137,9×54,7×17		AK		[+]	**PF0473**	105,5×38,2×13,7	
3.2 All-wheel Drive	01/09 →	171	233	ST		[+]	**PF0494**	137,9×54,7×17		AK		[+]	**PF0473**	105,5×38,2×13,7	
Ignis I (FH)															
1.3	10/00 → 09/03	61	83	ST		[+]	**PF0470**	108,7×45,4×16							
1.3 4WD	10/00 → 09/03	61	83	ST		[+]	**PF0470**	108,7×45,4×16							
1.5	08/03 → 12/05	83	113	ST		[+]	**PF0470**	108,7×45,4×16							
Ignis II															
1.3	09/03 →	69	94	BSC		[+]	**PF0450**	130,9×44,3×15,7							
1.3 4x4	09/03 →	69	94	BSC		[+]	**PF0450**	130,9×44,3×15,7							
1.3 DDiS	09/03 →	51	70	BSC		[+]	**PF0450**	130,9×44,3×15,7							
1.5	09/03 →	73	99	BSC		[+]	**PF0470**	108,7×45,4×16							
1.5 4x4	09/03 →	73	99	BSC		[+]	**PF0470**	108,7×45,4×16							
1.5 Sport	12/03 →	80	109	BSC		[+]	**PF0470**	108,7×45,4×16							

		KW	CV												
				SiS	i	W.i.	MAGNETI MARELLI	W×H×Th (mm)	Extra kit [Opt]	SiS	i	W.i.	MAGNETI MARELLI	W×H×Th (mm)	Extra kit [Opt]
SUZUKI															
Kizashi (FR)															
2.4	10/10 →	134	182	ST		[-]	**PF0351**	142×59×17		AK		[+]	**PF0350**	105,5×38,2×14,2	
2.4	10/10 →	134	182	ST		[-]	**PF0351**	142×59×17		AK		[+]	**PF0462**	88,9×47,5×14,7	
2.4 4x4	10/10 →	134	182	ST		[-]	**PF0351**	142×59×17		AK		[+]	**PF0350**	105,5×38,2×14,2	
2.4 4x4	10/10 →	134	182	ST		[-]	**PF0351**	142×59×17		AK		[+]	**PF0462**	88,9×47,5×14,7	
Liana Berlina (ER)															
1.3	03/02 →	66	90	AK		[+]	**PF0490**	136,5×52,6×17							
1.4 DDiS	04/04 →	66	90	AK		[+]	**PF0490**	136,5×52,6×17							
1.6	03/02 →	76	103	AK		[+]	**PF0490**	136,5×52,6×17							
1.6	01/05 →	79	107	AK		[+]	**PF0490**	136,5×52,6×17							
1.6 4WD	03/02 →	76	103	AK		[+]	**PF0490**	136,5×52,6×17							
1.6 4WD	04/02 →	78	106	AK		[+]	**PF0490**	136,5×52,6×17							
1.6 4WD	01/05 →	79	107	AK		[+]	**PF0490**	136,5×52,6×17							
1.6 i	04/02 →	78	106	AK		[+]	**PF0490**	136,5×52,6×17							
1.8 i	10/01 →	92	125	AK		[+]	**PF0490**	136,5×52,6×17							
2.3	04/04 →	114	155	AK		[+]	**PF0490**	136,5×52,6×17							
Liana SW (ER)															
1.3	07/01 →	66	90	AK		[+]	**PF0490**	136,5×52,6×17							
1.4 DDiS	04/04 →	66	90	AK		[+]	**PF0490**	136,5×52,6×17							
1.6	07/01 →	76	103	AK		[+]	**PF0490**	136,5×52,6×17							
1.6	01/05 →	79	107	AK		[+]	**PF0490**	136,5×52,6×17							
1.6 4WD	07/01 →	76	103	AK		[+]	**PF0490**	136,5×52,6×17							
1.6 4WD	04/02 →	78	106	AK		[+]	**PF0490**	136,5×52,6×17							
1.6 4WD	01/05 →	79	107	AK		[+]	**PF0490**	136,5×52,6×17							
1.6 i	04/02 →	78	106	AK		[+]	**PF0490**	136,5×52,6×17							
1.8 i	10/01 →	92	125	AK		[+]	**PF0490**	136,5×52,6×17							
S-Cross															
1.6	12/13 →	86	117	ST		[+]	**PF0727**	141,9×55,1×15,7		AK		[+]	**PF0646**	98,5×40×14,3	
1.6	12/13 →	86	117	ST	4x4	[+]	**PF0727**	141,9×55,1×15,7		AK		[+]	**PF0646**	98,5×40×14,3	
1.6 WT	13 →			ST		[+]	**PF0727**	141,9×55,1×15,7		AK		[+]	**PF0646**	98,5×40×14,3	
1.6 4WD	13 →			LG	4x4	[+]	**PF0727**	141,9×55,1×15,7		AK		[+]	**PF0646**	98,5×40×14,3	
1.6 DSiS	13 →			LG		[+]	**PF0727**	141,9×55,1×15,7		AK		[+]	**PF0646**	98,5×40×14,3	
1.6 DSiS 4WD	13 →			LG	4x4	[+]	**PF0727**	141,9×55,1×15,7		AK		[+]	**PF0646**	98,5×40×14,3	
Splash															
1.0	01/08 →	48	65	LG		[+]	**PF0353**	116,5×52,4×17	OK030/ OK058						
1.2	01/08 →	63	86	LG		[+]	**PF0353**	116,5×52,4×17	OK030/ OK058						
1.2 VVT	09/10 →	69	94	LG		[+]	**PF0353**	116,5×52,4×17	OK030/ OK058						
1.3 CDTI	01/08 →	55	75	LG		[+]	**PF0353**	116,5×52,4×17	OK030/ OK058						

		KW	CV	SiS	i	W.i.	MAGNETI MARELLI	W×H×Th (mm)	Extra kit [Opt]	SiS	i	W.i.	MAGNETI MARELLI	W×H×Th (mm)	Extra kit [Opt]
SUZUKI															
Super Carry Bus (ED)															
1.0	10/92 → 03/99	31	42	ST		[+]	**PF0471**	108,7×45,4×16							
1.0	09/94 → 03/99	30	41	ST		[+]	**PF0471**	108,7×45,4×16							
1.0	10/85 → 03/99	33	45	ST	(SK)	[+]	**PF0471**	108,7×45,4×16							
Swift I (SA,AA)															
1.0	10/83 → 03/89	37	50	AK	(SA310, AA41/43)	[+]	**PF0491**	107,3×44,6×15							
1.0 Turbo	02/85 → 12/89	52	71	AK	(SA310)	[+]	**PF0491**	107,3×44,6×15							
1.3	08/85 → 06/86	74	101	AK		[+]	**PF0491**	107,3×44,6×15							
1.3	10/84 → 03/89	50	68	AK	(SA413, AA51)	[+]	**PF0491**	107,3×44,6×15							
1.3	10/84 → 03/89	54	73	AK	(SA413, AA51/53)	[+]	**PF0491**	107,3×44,6×15							
1.3	08/86 → 03/89	47	64	AK	(SA413, AA53)	[+]	**PF0491**	107,3×44,6×15							
1.3 GTi/Gxi	08/86 → 03/89	74	101	AK	(SA413, AA33)	[+]	**PF0491**	107,3×44,6×15							
Swift II															
1.0	89 → 91			AK		[+]	**PF0491**	107,3×44,6×15							
1.0 GLS	98 →			BSC		[+]	**PF0549**	131×44,2×15,5							
1.3i GLS	98 →			BSC		[+]	**PF0549**	131×44,2×15,5							
1.6i	90 → 98			AK		[+]	**PF0491**	107,3×44,6×15							
1.6i	98 →			BSC		[+]	**PF0549**	131×44,2×15,5							
1.9 TD	98 →			BSC		[+]	**PF0549**	131×44,2×15,5							
Swift III															
1.3	02/05 →	68	92	LG		[+]	**PF0353**	116,5×52,4×17	OK030/ OK058						
1.3 4x4	01/06 →	66	90	LG		[+]	**PF0353**	116,5×52,4×17	OK030/ OK058						
1.3 4x4	02/05 →	68	92	LG		[+]	**PF0353**	116,5×52,4×17	OK030/ OK058						
1.3 DDiS	08/05 →	51	69	LG		[+]	**PF0353**	116,5×52,4×17	OK030/ OK058						
1.3 DDiS	08/05 →	55	75	LG		[+]	**PF0353**	116,5×52,4×17	OK030/ OK058						
1.5	02/05 →	75	102	LG		[+]	**PF0353**	116,5×52,4×17	OK030/ OK058						
1.5 4x4	02/05 →	74	101	LG		[+]	**PF0353**	116,5×52,4×17	OK030/ OK058						
1.6	05/06 →	92	125	LG		[+]	**PF0353**	116,5×52,4×17	OK030/ OK058						

		KW	CV													
				SiS	i	W.i.	MAGNETI MARELLI	W×H×Th (mm)	Extra kit [Opt]	SiS	i	W.i.	MAGNETI MARELLI	W×H×Th (mm)	Extra kit [Opt]
SUZUKI																
Swift IV																
1.2	10/10 →	69	94	LG	(FZ, NZ, MZ, EZ)	[+]	**PF0818**	125,7×51.4×15,5		AK		[+]	**PF0646**	98,5×40×14,3	
1.2	10/10 →	66	90	LG	(FZ, NZ, MZ, EZ)	[+]	**PF0818**	125,7×51.4×15,5		AK		[+]	**PF0646**	98,5×40×14,3	
1.2 4x4	10/10 →	69	94	LG	(FZ, NZ, MZ, EZ)	[+]	**PF0818**	125,7×51.4×15,5		AK		[+]	**PF0646**	98,5×40×14,3	
1.2 4x4	10/10 →	66	90	LG	(FZ, NZ, MZ, EZ)	[+]	**PF0818**	125,7×51.4×15,5		AK		[+]	**PF0646**	98,5×40×14,3	
1.3 DDiS	10/10 →	55	75	LG	(FZ, NZ, MZ, EZ)	[+]	**PF0818**	125,7×51.4×15,5		AK		[+]	**PF0646**	98,5×40×14,3	
SX4 (GY)																
1.5 WT 2WD	05/06 →			LG		[+]	**PF0241**	131,6×57×16	OK030/ OK054	AK		[+]	**PF0464**	88,9×47,5×14,7	
1.5 WT 2WD	05/06 →			ST		[+]	**PF0695**	137×53×16,8		AK		[+]	**PF0464**	88,9×47,5×14,7	
1.6 16V	05/06 →			LG		[+]	**PF0241**	131,6×57×16	OK030/ OK054	AK		[+]	**PF0464**	88,9×47,5×14,7	
1.6 16V	05/06 →			ST		[+]	**PF0695**	137×53×16,8		AK		[+]	**PF0464**	88,9×47,5×14,7	
1.6 16V 4WD	05/06 →			LG		[+]	**PF0241**	131,6×57×16	OK030/ OK054	AK		[+]	**PF0464**	88,9×47,5×14,7	
1.6 16V 4WD	05/06 →			ST		[+]	**PF0695**	137×53×16,8		AK		[+]	**PF0464**	88,9×47,5×14,7	
1.9 DDiS 4WD	05/06 →			LG		[+]	**PF0241**	131,6×57×16	OK030/ OK054	AK		[+]	**PF0464**	88,9×47,5×14,7	
1.9 DDiS 4WD	05/06 →			ST		[+]	**PF0695**	137×53×16,8		AK		[+]	**PF0464**	88,9×47,5×14,7	
2.0 DDiS	05/06 →			LG		[+]	**PF0241**	131,6×57×16	OK030/ OK054	AK		[+]	**PF0464**	88,9×47,5×14,7	
2.0 DDiS	05/06 →			ST		[+]	**PF0695**	137×53×16,8		AK		[+]	**PF0464**	88,9×47,5×14,7	
SX4 3 Volumi (GY)																
1.6 16V	10/07 →	79	107	LG		[+]	**PF0241**	131,6×57×16	OK030/ OK054	AK		[+]	**PF0464**	88,9×47,5×14,7	
1.6 16V	10/07 →	79	107	ST		[+]	**PF0695**	137×53×16,8		AK		[+]	**PF0464**	88,9×47,5×14,7	
1.6 16V 4WD	10/07 →	88	120	LG		[+]	**PF0241**	131,6×57×16	OK030/ OK054	AK		[+]	**PF0464**	88,9×47,5×14,7	
1.6 16V 4WD	10/07 →	88	120	ST		[+]	**PF0695**	137×53×16,8		AK		[+]	**PF0464**	88,9×47,5×14,7	
SX4																
1.6	08/13 →	88	120	ST		[+]	**PF0695**	137×53×16,8		AK		[+]	**PF0464**	88,9×47,5×14,7	
1.6	08/13 →	88	120	ST		[+]	**PF0695**	137×53×16,8		AK		[+]	**PF0464**	88,9×47,5×14,7	
1.6 DDiS	08/13 →	88	120	ST		[+]	**PF0695**	137×53×16,8		AK		[+]	**PF0464**	88,9×47,5×14,7	
1.6 DDiS	08/13 →	88	120	ST		[+]	**PF0695**	137×53×16,8		AK		[+]	**PF0464**	88,9×47,5×14,7	
Wagon R+ I (EM)																
1.0	02/98 → 05/00	48	65	AK	(MA61)	[+]	**PF0534**	106,4×50,2×15							
1.2	02/98 → 05/00	51	69	AK		[+]	**PF0534**	106,4×50,2×15							
1.2 4WD	02/98 → 05/00	51	69	AK		[+]	**PF0534**	106,4×50,2×15							

		KW	CV	SiS	i	W.i.	MAGNETI MARELLI	W×H×Th (mm)	Extra kit [Opt]	SiS	i	W.i.	MAGNETI MARELLI	W×H×Th (mm)	Extra kit [Opt]
SUZUKI															
Wagon R+ I (EM)															
1.3 VVTi GL All-wheel Drive	09/03 →	69	94	AK		[+]	**PF0534**	106,4×50,2×15							
Wagon R+ II (MM)															
0.7	08/00 → 07/03	40	54	BSC		[+]	**PF0548**	131×44,2×16							
0.7	08/00 → 07/05	47	64	BSC		[+]	**PF0548**	131×44,2×16							
0.7 FT-S	08/03 →	44	60	BSC		[+]	**PF0548**	131×44,2×16							
1.0	08/00 → 07/03	51	69	BSC		[+]	**PF0548**	131×44,2×16							
1.0 XT Plus	08/00 → 07/01	74	101	BSC		[+]	**PF0548**	131×44,2×16							
1.3	05/00 →	56	76	BSC		[+]	**PF0548**	131×44,2×16							
1.3	09/03 →	69	94	BSC		[+]	**PF0548**	131×44,2×16							
1.3	08/01 →	65	88	BSC		[+]	**PF0548**	131×44,2×16							
1.3	08/01 →	65	88	BSC		[+]	**PF0548**	131×44,2×16							
1.3 4WD	10/01 →	56	76	BSC		[+]	**PF0548**	131×44,2×16							
1.3 4WD	09/03 →	69	94	BSC		[+]	**PF0548**	131×44,2×16							
1.3 DDiS	09/03 →	51	70	BSC		[+]	**PF0548**	131×44,2×16							
TATA (TELCO)															
Indigo (4_V2)															
1.2	02/08 →	48	65	AK		[+]	**PF0491**	107,3×44,6×15							
1.4	01/03 →	62	85	AK		[+]	**PF0491**	107,3×44,6×15							
1.4	09/05 →	63	86	AK		[+]	**PF0491**	107,3×44,6×15							
1.4	09/05 →	74	101	AK		[+]	**PF0491**	107,3×44,6×15							
1.4 D	01/03 →	46	62	AK		[+]	**PF0491**	107,3×44,6×15							
1.4 D	05/06 →	51	69	AK		[+]	**PF0491**	107,3×44,6×15							
1.4 D	01/08 →	52	70	AK		[+]	**PF0491**	107,3×44,6×15							
1.4 TD	07/03 →	52	71	AK		[+]	**PF0491**	107,3×44,6×15							
Indigo Marina (4_V2)															
1.4	01/03 →	62	85	AK		[+]	**PF0491**	107,3×44,6×15							
1.4	09/05 →	62	84	AK		[+]	**PF0491**	107,3×44,6×15							
1.4 D	01/03 →	46	62	AK		[+]	**PF0491**	107,3×44,6×15							
1.4 D	05/06 →	51	69	AK		[+]	**PF0491**	107,3×44,6×15							
1.4 DICOR	01/03 →	52	71	AK		[+]	**PF0491**	107,3×44,6×15							
1.4 TD	07/03 →	52	71	AK		[+]	**PF0491**	107,3×44,6×15							
TOYOTA															
4 Runner (_N13)															
2.2 All-wheel Drive 4x4	10/89 → 10/90	74	101	ST	(YN130)	[+]	**PF0401**	119,2×68×15,0							
2.4	08/87 → 03/96	82	112	ST	(RN61)	[+]	**PF0401**	119,2×68×15,0							
2.4 All-wheel Drive 4x4	10/89 → 07/96	75	102	ST	(RN130)	[+]	**PF0401**	119,2×68×15,0							
2.4 TD 4x4	08/89 → 11/95	66	90	ST		[+]	**PF0401**	119,2×68×15,0							
2.7	11/95 → 07/02	112	152	ST		[+]	**PF0401**	119,2×68×15,0							

		KW	CV	SiS	i	W.i.	MAGNETI MARELLI	W×H×Th (mm)	Extra kit [Opt]	SiS	i	W.i.	MAGNETI MARELLI	W×H×Th (mm)	Extra kit [Opt]
TOYOTA															
4 Runner (_N13)															
2.7 i 4x4	11/95 → 03/96	112	152	ST		[+]	PF0401	119,2×68×15,0							
2.8 D 4x4	11/95 → 06/99	61	83	ST		[+]	PF0401	119,2×68×15,0							
2.8 D All-wheel Drive 4x4	10/89 → 06/96	60	82	ST	(LN130)	[+]	PF0401	119,2×68×15,0							
3.0 4x4	01/90 → 08/92	112	152	ST		[+]	PF0401	119,2×68×15,0							
3.0 TDI All-wheel Drive	09/00 → 07/02	103	140	ST		[+]	PF0401	119,2×68×15,0							
3.0 Turbo-D	10/93 → 03/96	92	125	ST	(KZN 130)	[+]	PF0401	119,2×68×15,0							
3.0 V6	07/90 → 11/95	105	143	ST	(VZN 130)	[+]	PF0401	119,2×68×15,0							
3.4	11/95 → 07/02	136	185	ST		[+]	PF0401	119,2×68×15,0							
3.4 i 4x4	11/95 → 03/96	136	185	ST		[+]	PF0401	119,2×68×15,0							
Aurion (GSV;ACV)															
2.4	06 → 07/09	116	158	AK		[-]	PF0641	157,7×56,9×17,6							
3.5	06 → 09/11	200	268	AK		[-]	PF0641	157,7×56,9×17,6							
3.5	06 → 09/11	235	320	AK		[-]	PF0641	157,7×56,9×17,6							
Auris (_ZE15_, _RE15_)															
1.33 Dual-VVTi	05/09 →	74	101	AK		[-]	PF0663	139,1×55,6×17,5		AK		[+]	PF0629	98,6×42,5×14,8	
1.33 Dual-VVTi	01/10 →	73	99	AK		[-]	PF0663	139,1×55,6×17,5		AK		[+]	PF0629	98,6×42,5×14,8	
1.4 VVTi	03/07 →	71	97	AK		[-]	PF0663	139,1×55,6×17,5		AK		[+]	PF0629	98,6×42,5×14,8	
1.4 D-4D	03/07 →	66	90	AK		[+]	PF0664	136,8×57,9×19,2	OK079	AK		[+]	PF0666	102,3×45,6×16,1	OK040
1.6 VVTi	03/07 →	91	124	AK		[-]	PF0663	139,1×55,6×17,5		AK		[+]	PF0629	98,6×42,5×14,8	
1.8	02/09 →	106	144	AK		[-]	PF0663	139,1×55,6×17,5		AK		[+]	PF0629	98,6×42,5×14,8	
1.8	02/09 →	108	147	AK		[-]	PF0663	139,1×55,6×17,5		AK		[+]	PF0629	98,6×42,5×14,8	
1.8 4WD	02/09 →	100	136	AK		[-]	PF0663	139,1×55,6×17,5		AK		[+]	PF0629	98,6×42,5×14,8	
1.8 Hybrid	09/10 →	73	99	AK		[-]	PF0663	139,1×55,6×17,5		AK		[+]	PF0629	98,6×42,5×14,8	
1.8 VVTi	10/06 →	100	136	AK		[-]	PF0663	139,1×55,6×17,5		AK		[+]	PF0629	98,6×42,5×14,8	
2.0 D-4D	03/07 →	93	126	AK		[+]	PF0665	150,9×62,5×19	OK079	AK		[+]	PF0666	102,3×45,6×16,1	OK040
2.2 D	03/07 →	130	177	AK		[+]	PF0665	150,9×62,5×19	OK079	AK		[+]	PF0666	102,3×45,6×16,1	OK040
Auris (NZE18_, ZRE18_)															
1.3	10/12 →	73	99	AK		[+]	PF0664	136,8×57,9×19,2	OK079	AK		[+]	PF0629	98,6×42,5×14,8	
1.3	10/12 →	73	99	BSC		[+]	PF0708	134,2×57,1×18,7		AK	Made in (J)	[+]	PF0666	102,3×45,6×16,1	OK040
1.5	10/12 →	77	105	AK		[+]	PF0664	136,8×57,9×19,2	OK079	AK		[+]	PF0629	98,6×42,5×14,8	
1.5	10/12 →	77	105	BSC		[+]	PF0708	134,2×57,1×18,7		AK	Made in (J)	[+]	PF0666	102,3×45,6×16,1	OK040
1.5	10/12 →	80	109	AK		[+]	PF0664	136,8×57,9×19,2	OK079	AK		[+]	PF0629	98,6×42,5×14,8	
1.5	10/12 →	80	109	BSC		[+]	PF0708	134,2×57,1×18,7		AK	Made in (J)	[+]	PF0666	102,3×45,6×16,1	OK040
1.6	10/12 →	97	132	AK		[+]	PF0664	136,8×57,9×19,2	OK079	AK		[+]	PF0629	98,6×42,5×14,8	
1.6	10/12 →	97	132	BSC		[+]	PF0708	134,2×57,1×18,7		AK	Made in (J)	[+]	PF0666	102,3×45,6×16,1	OK040
1.8	10/12 →	103	140	AK		[+]	PF0664	136,8×57,9×19,2	OK079	AK		[+]	PF0629	98,6×42,5×14,8	
1.8	10/12 →	103	140	BSC		[+]	PF0708	134,2×57,1×18,7		AK	Made in (J)	[+]	PF0666	102,3×45,6×16,1	OK040
1.8	10/12 →	106	144	AK		[+]	PF0664	136,8×57,9×19,2	OK079	AK		[+]	PF0629	98,6×42,5×14,8	
1.8	10/12 →	106	144	BSC		[+]	PF0708	134,2×57,1×18,7		AK	Made in (J)	[+]	PF0666	102,3×45,6×16,1	OK040
1.4 D-4D	10/12 →	66	90	AK		[+]	PF0664	136,8×57,9×19,2	OK079	AK		[+]	PF0629	98,6×42,5×14,8	
1.4 D-4D	10/12 →	66	90	BSC		[+]	PF0708	134,2×57,1×18,7		AK	Made in (J)	[+]	PF0666	102,3×45,6×16,1	OK040
1.8 Hybrid	10/12 →	100	136	AK		[+]	PF0664	136,8×57,9×19,2	OK079	AK		[+]	PF0629	98,6×42,5×14,8	

		KW	CV	SiS	i	W.i.	MAGNETI MARELLI	W×H×Th (mm)	Extra kit [Opt]	SiS	i	W.i.	MAGNETI MARELLI	W×H×Th (mm)	Extra kit [Opt]
TOYOTA															
Auris (NZE18_, ZRE18_)															
1.8 Hybrid	10/12→	100	136	BSC		[+]	**PF0708**	134,2×57,1×18,7		AK	Made in (J)	[+]	**PF0666**	102,3×45,6×16,1	OK040
2.0 D-4D	10/12→	91	124	AK		[+]	**PF0664**	136,8×57,9×19,2	OK079	AK		[+]	**PF0629**	98,6×42,5×14,8	
2.0 D-4D	10/12→	91	124	BSC		[+]	**PF0708**	134,2×57,1×18,7		AK	Made in (J)	[+]	**PF0666**	102,3×45,6×16,1	OK040
Auris Touring Sport															
1.3	07/13→	73	99	AK	(ZWE18_, ZRE18_)	[+]	**PF0665**	150,9×62,5×19	OK079	AK		[+]	**PF0666**	102,3×45,6×16,1	OK040
1.6	07/13→	97	132	AK	(ZWE18_, ZRE18_)	[+]	**PF0665**	150,9×62,5×19	OK079	AK		[+]	**PF0666**	102,3×45,6×16,1	OK040
1.4 D-4D	07/13→	66	90	AK	(ZWE18_, ZRE18_)	[+]	**PF0665**	150,9×62,5×19	OK079	AK		[+]	**PF0666**	102,3×45,6×16,1	OK040
1.8 Hybrid	07/13→	73	99	AK	(ZWE18_, ZRE18_)	[+]	**PF0665**	150,9×62,5×19	OK079	AK		[+]	**PF0666**	102,3×45,6×16,1	OK040
2.0 D-4D	07/13→	91	124	AK	(ZWE18_, ZRE18_)	[+]	**PF0665**	150,9×62,5×19	OK079	AK		[+]	**PF0666**	102,3×45,6×16,1	OK040
Avensis I Berlina / SW (T22)															
1.6 16V	98→03			ATE	(AT220)	[+]	**PF0532**	156,4×54,8×18,2		AK	(AT220)	[+]	**PF0292**	107,8×42,6×15,5	
1.6 16V	07/00→03			ATE	(ZZT220)	[+]	**PF0532**	156,4×54,8×18,2		AK	(ZZT220)	[+]	**PF0292**	107,8×42,6×15,5	
1.6 16V	→06/01			ATE	(ZZT220)	[+]	**PF0532**	156,4×54,8×18,2		AK	(ZZT220)	[+]	**PF0492**	107,8×42,6×15,5	
1.6 16V	07/01→03			ATE	(ZZT220)	[+]	**PF0595**	155,2×68,7×18,3		LG	(ZZT220)	[-]	**PF0596**	87,1×47,1×15,5	
1.6 16V	10/00→03			AK	(T22)	[+]	**PF0509**	141×56,5×15,5		AK	(T22)	[+]	**PF0292**	107,8×42,6×15,5	
1.6 16V WT-i	10/00→03			AK	(T22)	[+]	**PF0509**	141×56,5×15,5		AK	(T22)	[+]	**PF0292**	107,8×42,6×15,5	
1.8 16V	04/99→03			ATE	(AT221)	[+]	**PF0532**	156,4×54,8×18,2		AK	(AT221)	[+]	**PF0292**	107,8×42,6×15,5	
1.8 16V	07/00→03			ATE	(ZZT221)	[+]	**PF0532**	156,4×54,8×18,2		AK	(ZZT221)	[+]	**PF0292**	107,8×42,6×15,5	
1.8 16V	→06/01			ATE	(ZZT221)	[+]	**PF0532**	156,4×54,8×18,2		AK	(ZZT221)	[+]	**PF0492**	107,8×42,6×15,5	
1.8 16V	07/01→03			ATE	(ZZT221)	[+]	**PF0595**	155,2×68,7×18,3		LG	(ZZT221)	[-]	**PF0596**	87,1×47,1×15,5	
1.8 16V	10/00→03			AK	(T22)	[+]	**PF0509**	141×56,5×15,5		AK	(T22)	[+]	**PF0292**	107,8×42,6×15,5	
1.8 16V WT-i	10/00→03			AK	(T22)	[+]	**PF0509**	141×56,5×15,5		AK	(T22)	[+]	**PF0292**	107,8×42,6×15,5	
2.0 16V	98→03			ATE	(ST220)	[+]	**PF0532**	156,4×54,8×18,2		AK	(ST220)	[+]	**PF0292**	107,8×42,6×15,5	
2.0 16V	→06/01			ATE	(ST220)	[+]	**PF0532**	156,4×54,8×18,2		AK	(ST220)	[+]	**PF0492**	107,8×42,6×15,5	
2.0 16V	07/01→03			ATE	(ST220)	[+]	**PF0595**	155,2×68,7×18,3		LG	(ST220)	[-]	**PF0596**	87,1×47,1×15,5	
2.0 16V	→06/01			ATE	(AZT220)	[+]	**PF0532**	156,4×54,8×18,2		AK	(AZT220)	[+]	**PF0492**	107,8×42,6×15,5	
2.0 16V	07/01→03			ATE	(AZT220)	[+]	**PF0595**	155,2×68,7×18,3		LG	(AZT220)	[-]	**PF0596**	87,1×47,1×15,5	
2.0 16V	10/00→03			AK	(T22)	[+]	**PF0509**	141×56,5×15,5		AK	(T22)	[+]	**PF0292**	107,8×42,6×15,5	
2.0 16V WT-i	10/00→03			AK	(T22)	[+]	**PF0509**	141×56,5×15,5		AK	(T22)	[+]	**PF0292**	107,8×42,6×15,5	
2.0 TD	98→03			ATE	(CDT220)	[+]	**PF0532**	156,4×54,8×18,2		AK	(CDT220)	[+]	**PF0292**	107,8×42,6×15,5	
2.0 TD	→06/01			ATE	(CDT220)	[+]	**PF0532**	156,4×54,8×18,2		AK	(CDT220)	[+]	**PF0492**	107,8×42,6×15,5	
2.0 TD	07/01→03			ATE	(CDT220)	[+]	**PF0595**	155,2×68,7×18,3		LG	(CDT220)	[-]	**PF0596**	87,1×47,1×15,5	
2.0 TD	10/00→03			AK	(T22)	[+]	**PF0509**	141×56,5×15,5		AK	(T22)	[+]	**PF0292**	107,8×42,6×15,5	
2.0 TD WT-i	10/00→03			AK	(T22)	[+]	**PF0509**	141×56,5×15,5		AK	(T22)	[+]	**PF0292**	107,8×42,6×15,5	
Avensis II Berlina (T25)															
1.6 VVT-i	04/03→	81	110	BSC		[+]	**PF0402**	150,8×63,1×18,7	OK038	BSC		[+]	**PF0403**	101,8×46,1×16,3	OK040
1.8	04/03→	95	129	BSC		[+]	**PF0402**	150,8×63,1×18,7	OK038	BSC		[+]	**PF0403**	101,8×46,1×16,3	OK040
2.0	04/03→	108	147	BSC		[+]	**PF0402**	150,8×63,1×18,7	OK038	BSC		[+]	**PF0403**	101,8×46,1×16,3	OK040
2.0 D-4D	04/03→	85	116	BSC		[+]	**PF0402**	150,8×63,1×18,7	OK038	BSC		[+]	**PF0403**	101,8×46,1×16,3	OK040

		KW	CV	SiS	i	W.i.	MAGNETI MARELLI	W×H×Th (mm)	Extra kit [Opt]	SiS	i	W.i.	MAGNETI MARELLI	W×H×Th (mm)	Extra kit [Opt]
TOYOTA															
Avensis II Berlina (T25)															
2.0 D-4D	03/06 →	93	126	BSC		[+]	**PF0402**	150,8×63,1×18,7	OK038	BSC		[+]	**PF0403**	101,8×46,1×16,3	OK040
2.0 VVTi	03/03 →	114	155	BSC		[+]	**PF0402**	150,8×63,1×18,7	OK038	BSC		[+]	**PF0403**	101,8×46,1×16,3	OK040
2.2 D-4D	10/05 →	110	150	BSC		[+]	**PF0402**	150,8×63,1×18,7	OK038	BSC		[+]	**PF0403**	101,8×46,1×16,3	OK040
2.2 D-CAT	07/05 →	130	177	BSC		[+]	**PF0402**	150,8×63,1×18,7	OK038	BSC		[+]	**PF0403**	101,8×46,1×16,3	OK040
2.2 TD	04/05 →	74	101	BSC		[+]	**PF0402**	150,8×63,1×18,7	OK038	BSC		[+]	**PF0403**	101,8×46,1×16,3	OK040
2.4	09/03 →	125	170	BSC		[+]	**PF0402**	150,8×63,1×18,7	OK038	BSC		[+]	**PF0403**	101,8×46,1×16,3	OK040
2.4	10/03 →	120	163	BSC		[+]	**PF0402**	150,8×63,1×18,7	OK038	BSC		[+]	**PF0403**	101,8×46,1×16,3	OK040
Avensis II SW (T25)															
1.6 VVT-i	04/03 →	81	110	BSC		[+]	**PF0402**	150,8×63,1×18,7	OK038	BSC		[+]	**PF0403**	101,8×46,1×16,3	OK040
1.8	04/03 →	95	129	BSC		[+]	**PF0402**	150,8×63,1×18,7	OK038	BSC		[+]	**PF0403**	101,8×46,1×16,3	OK040
2.0	04/03 →	108	147	BSC		[+]	**PF0402**	150,8×63,1×18,7	OK038	BSC		[+]	**PF0403**	101,8×46,1×16,3	OK040
2.0 D-4D	04/03 →	85	116	BSC		[+]	**PF0402**	150,8×63,1×18,7	OK038	BSC		[+]	**PF0403**	101,8×46,1×16,3	OK040
2.0 D-4D	03/06 →	93	126	BSC		[+]	**PF0402**	150,8×63,1×18,7	OK038	BSC		[+]	**PF0403**	101,8×46,1×16,3	OK040
2.0 VVTi	03/03 →	114	155	BSC		[+]	**PF0402**	150,8×63,1×18,7	OK038	BSC		[+]	**PF0403**	101,8×46,1×16,3	OK040
2.2 D-4D	10/05 →	110	150	BSC		[+]	**PF0402**	150,8×63,1×18,7	OK038	BSC		[+]	**PF0403**	101,8×46,1×16,3	OK040
2.2 D-CAT	07/05 →	130	177	BSC		[+]	**PF0402**	150,8×63,1×18,7	OK038	BSC		[+]	**PF0403**	101,8×46,1×16,3	OK040
2.2 TD	04/05 →	74	101	BSC		[+]	**PF0402**	150,8×63,1×18,7	OK038	BSC		[+]	**PF0403**	101,8×46,1×16,3	OK040
2.4	09/03 →	125	170	BSC		[+]	**PF0402**	150,8×63,1×18,7	OK038	BSC		[+]	**PF0403**	101,8×46,1×16,3	OK040
2.4	10/03 →	120	163	BSC		[+]	**PF0402**	150,8×63,1×18,7	OK038	BSC		[+]	**PF0403**	101,8×46,1×16,3	OK040
Avensis III Berlina (T27)															
1.6	02/09 →	97	132	AK		[+]	**PF0665**	150,9×62,5×19	OK079	BSC		[+]	**PF0686**	109×49,9×16,5	OK040
1.8	02/09 →	108	147	AK		[+]	**PF0665**	150,9×62,5×19	OK079	BSC		[+]	**PF0686**	109×49,9×16,5	OK040
2.0	02/09 →	112	152	AK		[+]	**PF0665**	150,9×62,5×19	OK079	BSC		[+]	**PF0686**	109×49,9×16,5	OK040
2.0 D-4D	02/09 →	93	126	AK		[+]	**PF0665**	150,9×62,5×19	OK079	BSC		[+]	**PF0686**	109×49,9×16,5	OK040
2.2 D-4D	02/09 →	110	150	AK		[+]	**PF0665**	150,9×62,5×19	OK079	BSC		[+]	**PF0686**	109×49,9×16,5	OK040
2.2 D-4D	02/09 →	130	177	BSC		[+]	**PF0781**	151×61×19	OK079	BSC		[+]	**PF0686**	109×49,9×16,5	OK040
Avensis III SW (T27)															
1.6	02/09 →	97	132	AK		[+]	**PF0665**	150,9×62,5×19	OK079	BSC		[+]	**PF0686**	109×49,9×16,5	OK040
1.8	02/09 →	108	147	AK		[+]	**PF0665**	150,9×62,5×19	OK079	BSC		[+]	**PF0686**	109×49,9×16,5	OK040
2.0	02/09 →	112	152	AK		[+]	**PF0665**	150,9×62,5×19	OK079	BSC		[+]	**PF0686**	109×49,9×16,5	OK040
2.0 D-4D	02/09 →	93	126	AK		[+]	**PF0665**	150,9×62,5×19	OK079	BSC		[+]	**PF0686**	109×49,9×16,5	OK040
2.2 D-4D	02/09 →	110	150	AK		[+]	**PF0665**	150,9×62,5×19	OK079	BSC		[+]	**PF0686**	109×49,9×16,5	OK040
2.2 D-4D	02/09 →	130	177	BSC		[+]	**PF0781**	151×61×19	OK079	BSC		[+]	**PF0686**	109×49,9×16,5	OK040
Avensis Verso (_ACM2)															
2.0 D-4D	08/01 →	85	116	ATE		[+]	**PF0532**	156,4×54,8×18,2							
2.0 D-4D	08/01 →	85	116	AK		[-]	**PF0597**	122,9×59,5×17		ST		[+]	**PF0598**	112,5×43×16,5	
2.0 VVT-i	08/01 →	110	150	ATE		[+]	**PF0532**	156,4×54,8×18,2							
2.0 VVT-i	08/01 →	110	150	AK		[-]	**PF0597**	122,9×59,5×17		ST		[+]	**PF0598**	112,5×43×16,5	
2.2 D-4D	04/08 →	100	136	ATE		[+]	**PF0532**	156,4×54,8×18,2							
2.2 D-4D	04/08 →	100	136	AK		[-]	**PF0597**	122,9×59,5×17		ST		[+]	**PF0598**	112,5×43×16,5	
2.4 VVTi 4x4	11/03 → 08/06	115	156	ATE		[+]	**PF0532**	156,4×54,8×18,2							
2.4 VVTi 4x4	11/03 → 08/06	115	156	AK		[-]	**PF0597**	122,9×59,5×17		ST		[+]	**PF0598**	112,5×43×16,5	
2.4 VVTi GLS	10/03 →	115	156	ATE		[+]	**PF0532**	156,4×54,8×18,2							
2.4 VVTi GLS	10/03 →	115	156	AK		[-]	**PF0597**	122,9×59,5×17		ST		[+]	**PF0598**	112,5×43×16,5	

		KW	CV													
				SiS	i	W.i.	MAGNETI MARELLI	W×H×Th (mm)	Extra kit [Opt]	SiS	i	W.i.	MAGNETI MARELLI	W×H×Th (mm)	Extra kit [Opt]
TOYOTA															
Aygo (_B10)															
1.0	07/05→	50	68	BSC	(KGB10)	[-]	**PF0172**	122,9×46,9×17,6	OK012						
1.0 GPL	07/05→	50	68	BSC		[-]	**PF0172**	122,9×46,9×17,6	OK012						
1.4 Hdi	07/05→	40	54	BSC	(WNB10)	[-]	**PF0172**	122,9×46,9×17,6	OK012						
Aygo II															
1.0	05/14→	50	68	BSC	(KGB40, PAB40)	[-]	**PF0172**	122,9×46,9×17,6	OK012						
Bb II (QNC2_)															
1.3	12/05→	68	92	ST		[+]	**PF0471**	108,7×45,4×16							
1.3 4WD	12/05→	68	92	ST		[+]	**PF0471**	108,7×45,4×16							
1.5	12/05→	80	109	ST		[+]	**PF0471**	108,7×45,4×16							
Cami Off-Road															
1.3	06/99→	66	90	ST		[+]	**PF0333**	114,1×19,9×15							
1.3	02/01→	63	86	ST		[+]	**PF0333**	114,1×19,9×15							
1.3 4x4	05/97→09/00	61	83	ST		[+]	**PF0333**	114,1×19,9×15							
1.3 4x4	06/99→	103	140	ST		[+]	**PF0333**	114,1×19,9×15							
1.3 4x4	02/01→	63	86	ST		[+]	**PF0333**	114,1×19,9×15							
Camry Liftback (V1)															
1.8	02/83→10/86	66	90	AK		[-]	**PF0405**	119,7×47,5×15							
1.8 Turbo-D	10/84→01/88	54	73	AK		[-]	**PF0405**	119,7×47,5×15							
2.0	01/83→12/87	78	106	AK		[-]	**PF0405**	119,7×47,5×15							
Camry Berlina/SW (V1)															
1.8	02/83→10/86	66	90	AK		[-]	**PF0405**	119,7×47,5×15		ST	+ Rear Disc	[+]	**PF0492**	107,8×42,6×15,5	
1.8 Turbo-D	11/83→01/88	54	73	AK		[-]	**PF0405**	119,7×47,5×15		ST	+ Rear Disc	[+]	**PF0492**	107,8×42,6×15,5	
2.0 GLI	03/83→10/86	79	107	AK		[-]	**PF0405**	119,7×47,5×15		ST	+ Rear Disc	[+]	**PF0492**	107,8×42,6×15,5	
2.0 TD	09/85→10/86	62	84	AK		[-]	**PF0405**	119,7×47,5×15		ST	+ Rear Disc	[+]	**PF0492**	107,8×42,6×15,5	
Camry Berlina II (_V2)															
1.8 i	10/86→08/88	66	90	AK	(SV20_)	[-]	**PF0405**	119,7×47,5×15							
2.0	09/89→06/91	82	112	AK		[-]	**PF0405**	119,7×47,5×15		AK	+ Rear Disc	[+]	**PF0492**	107,8×42,6×15,5	
2.0	11/86→05/91	94	128	AK	(SV21_, SV25_)	[-]	**PF0405**	119,7×47,5×15		AK	+ Rear Disc	[+]	**PF0492**	107,8×42,6×15,5	
2.0 4x4	08/88→05/91	94	128	AK		[-]	**PF0405**	119,7×47,5×15		AK	+ Rear Disc	[+]	**PF0492**	107,8×42,6×15,5	
2.0 Gli 16V	11/86→05/91	89	121	AK	(SV21_, SV25_)	[-]	**PF0405**	119,7×47,5×15		AK	+ Rear Disc	[+]	**PF0492**	107,8×42,6×15,5	
2.0 GLi 4x4	10/87→07/88	88	120	AK		[-]	**PF0405**	119,7×47,5×15		AK	+ Rear Disc	[+]	**PF0492**	107,8×42,6×15,5	
2.0 Turbo-D	11/86→05/91	62	84	AK	(CV20_)	[-]	**PF0405**	119,7×47,5×15		AK	+ Rear Disc	[+]	**PF0492**	107,8×42,6×15,5	
2.0 Turbo-D	11/88→05/91	63	86	AK	(CV20_)	[-]	**PF0405**	119,7×47,5×15		AK	+ Rear Disc	[+]	**PF0492**	107,8×42,6×15,5	
2.5 V6 GXI	02/88→05/91	118	160	AK	(VZV21_)	[-]	**PF0405**	119,7×47,5×15		AK	+ Rear Disc	[+]	**PF0492**	107,8×42,6×15,5	
Camry SW II (_V2)															
1.8	11/86→08/88	66	90	AK	(SV20_)	[-]	**PF0405**	119,7×47,5×15							
2.0	09/89→06/91	93	126	AK		[-]	**PF0405**	119,7×47,5×15		AK	+ Rear Disc	[+]	**PF0492**	107,8×42,6×15,5	
2.0	11/86→05/91	94	128	AK	(SV21_)	[-]	**PF0405**	119,7×47,5×15		AK	+ Rear Disc	[+]	**PF0492**	107,8×42,6×15,5	
2.0	09/89→04/91	82	112	AK	(SV22)	[-]	**PF0405**	119,7×47,5×15		AK	+ Rear Disc	[+]	**PF0492**	107,8×42,6×15,5	
2.0 GLi 16V	11/86→05/91	89	121	AK	(SV21_)	[-]	**PF0405**	119,7×47,5×15		AK	+ Rear Disc	[+]	**PF0492**	107,8×42,6×15,5	
2.0 GLi 4x4	08/88→05/91	94	128	AK		[-]	**PF0405**	119,7×47,5×15		AK	+ Rear Disc	[+]	**PF0492**	107,8×42,6×15,5	

		KW	CV													
				SiS	i	W.i.	MAGNETI MARELLI	W×H×Th (mm)	Extra kit [Opt]	SiS	i	W.i.	MAGNETI MARELLI	W×H×Th (mm)	Extra kit [Opt]
TOYOTA															
Camry SW II (_V2)															
2.0 Turbo-D	11/86 → 05/91	62	84	AK	(CV20_)	[-]	**PF0405**	119,7×47,5×15		AK	+ Rear Disc	[+]	**PF0492**	107,8×42,6×15,5	
2.0 Turbo-D	11/88 → 05/91	63	86	AK	(CV20_)	[-]	**PF0405**	119,7×47,5×15		AK	+ Rear Disc	[+]	**PF0492**	107,8×42,6×15,5	
2.5	01/90 → 05/91	118	160	AK	(VZV21_)	[-]	**PF0405**	119,7×47,5×15		AK	+ Rear Disc	[+]	**PF0492**	107,8×42,6×15,5	
Camry III (_CV1_, _V1_, _XV1_)															
1.8 I	08/91 → 09/97	92	125	AK	(SV40)	[+]	**PF0406**	133,2×53×17,5		AK		[+]	**PF0492**	107,8×42,6×15,5	
2.0 ZX	08/93 → 09/97	103	140	AK	(SV41)	[+]	**PF0406**	133,2×53×17,5		AK		[+]	**PF0292**	107,8×42,6×15,5	
2.2	02/93 → 04/95	93	126	AK		[+]	**PF0406**	133,2×53×17,5		AK		[+]	**PF0292**	107,8×42,6×15,5	
2.2	06/91 → 08/96	100	136	AK	(SXV10)	[+]	**PF0406**	133,2×53×17,5		AK		[+]	**PF0292**	107,8×42,6×15,5	
2.5	06/91 → 07/96	129	175	AK		[+]	**PF0406**	133,2×53×17,5		AK		[+]	**PF0292**	107,8×42,6×15,5	
2.0 ZX All-wheel Drive	06/91 → 09/97	100	136	AK	(SV43)	[+]	**PF0406**	133,2×53×17,5		AK		[+]	**PF0292**	107,8×42,6×15,5	
3.0	09/93 → 07/96	135	183	AK		[+]	**PF0406**	133,2×53×17,5		AK		[+]	**PF0292**	107,8×42,6×15,5	
3.0	02/93 → 09/95	136	185	AK		[+]	**PF0406**	133,2×53×17,5		AK		[+]	**PF0292**	107,8×42,6×15,5	
3.0	06/91 → 08/96	138	188	AK	(VCV10)	[+]	**PF0406**	133,2×53×17,5		AK		[+]	**PF0292**	107,8×42,6×15,5	
Camry IV (_V20)															
1.8	08/96 → 07/01	92	125							AK		[+]	**PF0492**	107,8×42,6×15,5	
2.0 TD	08/96 → 09/99	66	90							AK		[+]	**PF0492**	107,8×42,6×15,5	
2.2	11/00 → 11/01	93	126							AK		[+]	**PF0492**	107,8×42,6×15,5	
2.2	08/96 → 11/01	96	131							AK		[+]	**PF0492**	107,8×42,6×15,5	
2.5	08/96 → 07/01	147	200							AK		[+]	**PF0492**	107,8×42,6×15,5	
3.0	08/96 → 07/01	140	190							AK		[+]	**PF0492**	107,8×42,6×15,5	
3.0 24V	08/96 → 11/01	140	190							AK		[+]	**PF0492**	107,8×42,6×15,5	
3.0 V6	08/96 → 11/01	135	184							AK		[+]	**PF0492**	107,8×42,6×15,5	
Camry SW IV															
2.2	08/97 → 09/02	93	126							AK		[+]	**PF0492**	107,8×42,6×15,5	
2.5	08/96 → 07/01	147	200							AK		[+]	**PF0492**	107,8×42,6×15,5	
3.0	08/96 → 07/01	140	190							AK		[+]	**PF0492**	107,8×42,6×15,5	
Camry V (MCV;ACV;XV)															
2.0 VVTI	08/01 →	110	150							AK		[+]	**PF0492**	107,8×42,6×15,5	
2.0 VVTI	08/01 →	110	150	AK		[-]	**PF0641**	157,7×56,9×17,6		AK		[-]	**PF0633**	96,8×49,2×15,4	
2.4 VVT-i	11/01 →	112	152							AK		[+]	**PF0492**	107,8×42,6×15,5	
2.4 VVT-i	11/01 →	112	152	AK		[-]	**PF0641**	157,7×56,9×17,6		AK		[-]	**PF0633**	96,8×49,2×15,4	
2.4 VVTi Hybrid	01/06 →	105	143							AK		[+]	**PF0492**	107,8×42,6×15,5	
2.4 VVTi Hybrid	01/06 →	105	143	AK		[-]	**PF0641**	157,7×56,9×17,6		AK		[-]	**PF0633**	96,8×49,2×15,4	
2.4 VVTi LE	01/06 →	116	158							AK		[+]	**PF0492**	107,8×42,6×15,5	
2.4 VVTi LE	01/06 →	116	158	AK		[-]	**PF0641**	157,7×56,9×17,6		AK		[-]	**PF0633**	96,8×49,2×15,4	
3.0	09/02 → 06/06	141	192							AK		[+]	**PF0492**	107,8×42,6×15,5	
3.0	09/02 → 06/06	141	192	AK		[-]	**PF0641**	157,7×56,9×17,6		AK		[-]	**PF0633**	96,8×49,2×15,4	
3.0 V6	11/01 →	137	186							AK		[+]	**PF0492**	107,8×42,6×15,5	
3.0 V6	11/01 →	137	186	AK		[-]	**PF0641**	157,7×56,9×17,6		AK		[-]	**PF0633**	96,8×49,2×15,4	
3.3 VVTi	08/02 → 12/05	165	224							AK		[+]	**PF0492**	107,8×42,6×15,5	
3.3 VVTi	08/02 → 12/05	165	224	AK		[-]	**PF0641**	157,7×56,9×17,6		AK		[-]	**PF0633**	96,8×49,2×15,4	
3.5 VVTi XLE	01/06 →	197	268							AK		[+]	**PF0492**	107,8×42,6×15,5	
3.5 VVTi XLE	01/06 →	197	268	AK		[-]	**PF0641**	157,7×56,9×17,6		AK		[-]	**PF0633**	96,8×49,2×15,4	

		KW	CV	SiS	i	W.i.	MAGNETI MARELLI	W×H×Th (mm)	Extra kit [Opt]	SiS	i	W.i.	MAGNETI MARELLI	W×H×Th (mm)	Extra kit [Opt]
TOYOTA															
Carina II															
1.6 - 1.8 - 2.0	83 → 88			AK		[-]	**PF0405**	119,7×47,5×15							
1.6 - 2.0i - 2.0 D	88 → 92			AK	13"	[-]	**PF0405**	119,7×47,5×15		AK		[+]	**PF0292**	107,8×42,6×15,5	
1.6 - 2.0i - 2.0 D	88 → 92									AK		[+]	**PF0292**	107,8×42,6×15,5	
Carina E (_T19_)															
1.6	12/93 → 09/97	73	99	AK	(AT190)	[+]	**PF0406**	133,2×53×17,5		AK		[+]	**PF0492**	107,8×42,6×15,5	
1.6	12/93 → 09/97	85	116	AK	(AT190)	[+]	**PF0406**	133,2×53×17,5		AK		[+]	**PF0492**	107,8×42,6×15,5	
1.6 16V	10/95 → 09/97	78	106	AK		[+]	**PF0406**	133,2×53×17,5		AK		[+]	**PF0492**	107,8×42,6×15,5	
1.6 GLI	04/92 → 09/97	79	107	AK	(AT190)	[+]	**PF0406**	133,2×53×17,5		AK		[+]	**PF0492**	107,8×42,6×15,5	
1.8	01/95 → 09/97	79	107	AK	(AT191)	[+]	**PF0406**	133,2×53×17,5		AK		[+]	**PF0492**	107,8×42,6×15,5	
1.8 GL	10/94 → 09/97	92	125	AK		[+]	**PF0406**	133,2×53×17,5		AK		[+]	**PF0492**	107,8×42,6×15,5	
2.0 D	04/92 → 01/96	54	73	AK	(CT190)	[+]	**PF0406**	133,2×53×17,5		AK		[+]	**PF0292**	107,8×42,6×15,5	
2.0 GLI	04/92 → 09/97	98	133	AK	(ST191)	[+]	**PF0406**	133,2×53×17,5		AK		[+]	**PF0292**	107,8×42,6×15,5	
2.0 Gti	04/92 → 02/94	116	158	AK	(ST191)	[+]	**PF0406**	133,2×53×17,5		AK		[+]	**PF0292**	107,8×42,6×15,5	
2.0 GTi 16V	03/94 → 09/97	129	175	AK	(ST191_)	[+]	**PF0509**	141×56,5×15,5		AK		[+]	**PF0292**	107,8×42,6×15,5	
2.0 i	12/93 → 09/97	93	126	AK	(ST191)	[+]	**PF0406**	133,2×53×17,5		AK		[+]	**PF0292**	107,8×42,6×15,5	
2.0 TD	01/96 → 09/97	61	83	AK	(CT190)	[+]	**PF0406**	133,2×53×17,5		AK		[+]	**PF0292**	107,8×42,6×15,5	
Carina E 3 Volumi (_T19_)															
1.5 SG	04/92 → 09/97	77	105	AK		[+]	**PF0406**	133,2×53×17,5		AK		[+]	**PF0492**	107,8×42,6×15,5	
1.6	01/93 → 09/97	79	107	AK	(AT190)	[+]	**PF0406**	133,2×53×17,5		AK		[+]	**PF0492**	107,8×42,6×15,5	
1.6 (AT190)	01/95 → 09/97	73	99	AK	(AT190)	[+]	**PF0406**	133,2×53×17,5		AK		[+]	**PF0492**	107,8×42,6×15,5	
1.6 (AT190)	10/95 → 09/97	78	106	AK	(AT190)	[+]	**PF0406**	133,2×53×17,5		AK		[+]	**PF0492**	107,8×42,6×15,5	
1.6 16V (AT190_)	12/94 → 09/97	85	116	AK	(AT190)	[+]	**PF0406**	133,2×53×17,5		AK		[+]	**PF0492**	107,8×42,6×15,5	
1.6 GLI (AT190)	04/92 → 09/97	79	107	AK	(AT190)	[+]	**PF0406**	133,2×53×17,5		AK		[+]	**PF0492**	107,8×42,6×15,5	
1.8	04/92 → 09/97	85	116	AK		[+]	**PF0406**	133,2×53×17,5		AK		[+]	**PF0492**	107,8×42,6×15,5	
1.8 GL	10/94 → 09/97	92	125	AK		[+]	**PF0406**	133,2×53×17,5		AK		[+]	**PF0492**	107,8×42,6×15,5	
1.8 i 16V	01/95 → 09/97	79	107	AK	(AT191)	[+]	**PF0406**	133,2×53×17,5		AK		[+]	**PF0492**	107,8×42,6×15,5	
2.0	01/93 → 09/97	98	133	AK	(ST191)	[+]	**PF0406**	133,2×53×17,5		AK		[+]	**PF0492**	107,8×42,6×15,5	
2.0 D	08/92 → 01/96	54	73	AK	(CT190)	[+]	**PF0406**	133,2×53×17,5		AK		[+]	**PF0292**	107,8×42,6×15,5	
2.0 GLI	04/92 → 09/97	98	133	AK	(ST191)	[+]	**PF0406**	133,2×53×17,5		AK		[+]	**PF0292**	107,8×42,6×15,5	
2.0 GTi	04/92 → 02/94	116	158	AK	(ST191_)	[+]	**PF0406**	133,2×53×17,5		AK		[+]	**PF0292**	107,8×42,6×15,5	
2.0 GTi 16V	03/94 → 09/97	129	175	AK	(ST191_)	[+]	**PF0509**	141×56,5×15,5		AK		[+]	**PF0292**	107,8×42,6×15,5	
2.0 i	12/92 → 09/97	93	126	AK	(ST191)	[+]	**PF0406**	133,2×53×17,5		AK		[+]	**PF0292**	107,8×42,6×15,5	
2.0 TD	01/96 → 09/97	61	83	AK	(CT190_)	[+]	**PF0406**	133,2×53×17,5		AK		[+]	**PF0292**	107,8×42,6×15,5	
Carina E SportWagon (T19)															
1.6	04/92 → 09/97	85	115	AK		[+]	**PF0406**	133,2×53×17,5		AK		[+]	**PF0292**	107,8×42,6×15,5	
1.6 GLI	01/93 → 09/97	79	107	AK	(AT190_)	[+]	**PF0406**	133,2×53×17,5		AK		[+]	**PF0292**	107,8×42,6×15,5	
1.6 i	02/95 → 09/97	73	99	AK	(AT190_)	[+]	**PF0406**	133,2×53×17,5		AK		[+]	**PF0292**	107,8×42,6×15,5	
1.8 GL	10/94 → 09/97	92	125	AK		[+]	**PF0406**	133,2×53×17,5		AK		[+]	**PF0292**	107,8×42,6×15,5	
1.8 i	02/95 → 09/97	79	107	AK	(AT191_)	[+]	**PF0406**	133,2×53×17,5		AK		[+]	**PF0292**	107,8×42,6×15,5	
2.0 D	01/93 → 01/96	54	73	AK	(CT190_)	[+]	**PF0406**	133,2×53×17,5		AK		[+]	**PF0292**	107,8×42,6×15,5	

		KW	CV												
				SiS	i	W.i.	MAGNETI MARELLI	W×H×Th (mm)	Extra kit [Opt]	SiS	i	W.i.	MAGNETI MARELLI	W×H×Th (mm)	Extra kit [Opt]
TOYOTA															
Carina E SportWagon (T19)															
2.0 GLI	01/93 → 09/97	98	133	AK	(ST191_)	[+]	**PF0406**	133,2×53×17,5		AK		[+]	**PF0292**	107,8×42,6×15,5	
2.0 i	05/95 → 09/97	93	126	AK	(ST191_)	[+]	**PF0406**	133,2×53×17,5		AK		[+]	**PF0292**	107,8×42,6×15,5	
2.0 TD	01/96 → 09/97	61	83	AK	(CT190_)	[+]	**PF0406**	133,2×53×17,5		AK		[+]	**PF0292**	107,8×42,6×15,5	
Celica I (AT_)															
1.6i	89 → 11/93			AK	(AT18)	[+]	**PF0405**	119,7×47,5×15		AK		[+]	**PF0292**	107,8×42,6×15,5	
1.8i 16V	93 → 00			AK	(AT2)	[-]	**PF0406**	133,2×53×17,5							
1.8i 16V	93 → 00			AK	(A2T) +ABS	[-]	**PF0406**	133,2×53×17,5							
2.0i	86 → 90			AK		[+]	**PF0405**	119,7×47,5×15							
2.0i 16V GT Twin Cam	90 → 93									AK		[+]	**PF0492**	107,8×42,6×15,5	
2.0i	93 → 11/99				(ST2)					AK		[+]	**PF0492**	107,8×42,6×15,5	
2.0i 16V Cabrio	90 → 93									AK		[+]	**PF0492**	107,8×42,6×15,5	
Celica II (ZZT)															
1.8 16V VT-i	11/99 → 07			AK		[+]	**PF0592**	116,4×51,4×16,5		AK		[+]	**PF0593**	78,5×51,9×14	
1.8 16V TS	11/99 → 07			AK		[+]	**PF0592**	116,4×51,4×16,5		AK		[+]	**PF0593**	78,5×51,9×14	
1.8 16V TS	11/99 → 07			AK		[-]	**PF0493**	117,5×58,7×17,5		AK		[+]	**PF0593**	78,5×51,9×14	
1.8 16V VT-i	11/99 → 07			AK		[-]	**PF0493**	117,5×58,7×17,5		AK		[+]	**PF0593**	78,5×51,9×14	
Corolla (E7/E8/E9)															
Corolla 1.3	83 → 87			AK		[-]	**PF0405**	119,7×47,5×15							
Corolla 1.3	87 → 89			AK		[-]	**PF0405**	119,7×47,5×15							
Corolla 1.6	83 → 87			AK		[-]	**PF0405**	119,7×47,5×15							
Corolla 1.6i 16V GT - Coupé	85 → 87			AK		[-]	**PF0405**	119,7×47,5×15		AK		[+]	**PF0492**	107,8×42,6×15,5	
Corolla 1.6i 16V GT	87 → 89			AK		[-]	**PF0405**	119,7×47,5×15		AK		[+]	**PF0492**	107,8×42,6×15,5	
Corolla 1.6i 16V GT	89 → 92									AK		[+]	**PF0492**	107,8×42,6×15,5	
Corolla 1.6i	87 → 89			AK		[-]	**PF0405**	119,7×47,5×15		AK		[+]	**PF0492**	107,8×42,6×15,5	
Corolla 1.8	83 → 87			AK		[-]	**PF0405**	119,7×47,5×15		AK		[+]	**PF0492**	107,8×42,6×15,5	
Corolla 1.8 D	87 → 89			AK		[-]	**PF0405**	119,7×47,5×15		AK		[+]	**PF0492**	107,8×42,6×15,5	
Corolla (_E10)															
1.3 12V	07/92 → 04/97	53	72	AK	(EE100_)	[+]	**PF0406**	133,2×53×17,5							
1.3 XLI	09/95 → 04/97	55	75	AK	(EE101_)	[+]	**PF0406**	133,2×53×17,5							
1.3 XLI 16V	07/92 → 09/95	65	88	AK	(EE101)	[+]	**PF0406**	133,2×53×17,5							
1.6	05/92 → 07/95	85	115	AK		[+]	**PF0406**	133,2×53×17,5							
1.6	07/92 → 07/95	76	103	AK		[+]	**PF0406**	133,2×53×17,5							
1.6 i 20V	06/91 → 08/98	117	159	AK	(AE101)	[+]	**PF0406**	133,2×53×17,5							
1.6 Si	09/95 → 04/97	84	114	AK	(AE101_)	[+]	**PF0406**	133,2×53×17,5							
1.8 All-wheel Drive	05/92 → 07/95	88	120	AK	All-wheel	[+]	**PF0406**	133,2×53×17,5							
1.8 i	11/92 → 09/94	85	116	AK		[+]	**PF0406**	133,2×53×17,5							
2.0 D	07/92 → 04/97	53	72	AK	(CE100_)	[+]	**PF0406**	133,2×53×17,5							

		KW	CV	SiS	i	W.i.	MAGNETI MARELLI	W×H×Th (mm)	Extra kit [Opt]	SiS	i	W.i.	MAGNETI MARELLI	W×H×Th (mm)	Extra kit [Opt]
TOYOTA															
Corolla (E11)															
1.3	05/97 → 10/01	55	75	AK		[+]	**PF0406**	133,2×53×17,5							
1.4	04/97 → 02/00	63	86	AK	(EE111_)	[+]	**PF0406**	133,2×53×17,5							
1.4 16V	02/00 → 01/02	71	97	AK	(ZZE111_)	[+]	**PF0406**	133,2×53×17,5							
1.4 D4d	06/04 →	66	90	AK		[+]	**PF0406**	133,2×53×17,5							
1.5	09/99 → 10/01	78	106	AK		[+]	**PF0406**	133,2×53×17,5							
1.6	04/97 → 02/00	81	110	AK	(AE111_)	[+]	**PF0406**	133,2×53×17,5							
1.6 16V	02/00 → 01/02	81	110	AK	(ZZE112_)	[+]	**PF0406**	133,2×53×17,5							
1.6 Aut.	04/97 → 02/00	79	107	AK	(AE111_)	[+]	**PF0406**	133,2×53×17,5							
1.6 i 20V	08/98 → 08/00	121	165	AK	(AE111)	[+]	**PF0406**	133,2×53×17,5							
1.8	03/00 → 12/01	85	116	AK		[+]	**PF0406**	133,2×53×17,5							
1.8 Linea Terra	10/97 → 10/01	81	110	AK		[+]	**PF0406**	133,2×53×17,5							
1.9 D	02/00 → 01/02	51	69	AK	(WZE110_)	[+]	**PF0406**	133,2×53×17,5							
2.0 D	04/97 → 02/00	53	72	AK	(CE110_)	[+]	**PF0406**	133,2×53×17,5							
2.0 D-4D	09/00 → 01/02	66	90	AK		[+]	**PF0406**	133,2×53×17,5							
2.0 D-4D	08/00 → 10/01	81	110	AK		[+]	**PF0406**	133,2×53×17,5							
2.0 D4d	06/04 →	85	116	AK		[+]	**PF0406**	133,2×53×17,5							
2.2 D4d	11/06 →	130	177	AK		[+]	**PF0406**	133,2×53×17,5							
2.2 TD	04/98 → 10/01	66	90	AK		[+]	**PF0406**	133,2×53×17,5							
Corolla SW (_E12)															
1.4 D	07/04 →	66	90	LG		[+]	**PF0408**	131,6×57,3×17,5		AK		[+]	**PF0593**	78,5×51,9×14	
1.4 D	07/04 →	66	90	LG		[+]	**PF0408**	131,6×57,3×17,5		LG		[+]	**PF0407**	95,62×37,7×15,8	
1.4 VVT-i	01/02 →	71	97	LG		[+]	**PF0408**	131,6×57,3×17,5		AK		[+]	**PF0593**	78,5×51,9×14	
1.4 VVT-i	01/02 →	71	97	LG		[+]	**PF0408**	131,6×57,3×17,5		LG		[+]	**PF0407**	95,62×37,7×15,8	
1.6 VVT-i	01/02 →	81	110	LG		[+]	**PF0408**	131,6×57,3×17,5		AK		[+]	**PF0593**	78,5×51,9×14	
1.6 VVT-i	01/02 →	81	110	LG		[+]	**PF0408**	131,6×57,3×17,5		LG		[+]	**PF0407**	95,62×37,7×15,8	
1.6 VVTi	10/06 →	91	124	LG		[+]	**PF0408**	131,6×57,3×17,5		AK		[+]	**PF0593**	78,5×51,9×14	
1.6 VVTi	10/06 →	91	124	LG		[+]	**PF0408**	131,6×57,3×17,5		LG		[+]	**PF0407**	95,62×37,7×15,8	
1.8	06/04 →	100	136	LG		[+]	**PF0408**	131,6×57,3×17,5		AK		[+]	**PF0593**	78,5×51,9×14	
1.8	06/04 →	100	136	LG		[+]	**PF0408**	131,6×57,3×17,5		LG		[+]	**PF0407**	95,62×37,7×15,8	
1.8 All-wheel Drive	12/01 →	100	136	LG		[+]	**PF0408**	131,6×57,3×17,5		AK		[+]	**PF0593**	78,5×51,9×14	
1.8 All-wheel Drive	12/01 →	100	136	LG		[+]	**PF0408**	131,6×57,3×17,5		LG		[+]	**PF0407**	95,62×37,7×15,8	
1.8 VVTL-i TS	10/05 →	160	218	LG		[+]	**PF0408**	131,6×57,3×17,5		AK		[+]	**PF0593**	78,5×51,9×14	
1.8 VVTL-i TS	10/05 →	160	218	LG		[+]	**PF0408**	131,6×57,3×17,5		LG		[+]	**PF0407**	95,62×37,7×15,8	
1.8 VVTL-i TS	01/02 →	141	192	LG		[+]	**PF0408**	131,6×57,3×17,5		AK		[+]	**PF0593**	78,5×51,9×14	
1.8 VVTL-i TS	01/02 →	141	192	LG		[+]	**PF0408**	131,6×57,3×17,5		LG		[+]	**PF0407**	95,62×37,7×15,8	
1.8 VVTL-i TS	02/05 →	165	224	LG		[+]	**PF0408**	131,6×57,3×17,5		AK		[+]	**PF0593**	78,5×51,9×14	
1.8 VVTL-i TS	02/05 →	165	224	LG		[+]	**PF0408**	131,6×57,3×17,5		LG		[+]	**PF0407**	95,62×37,7×15,8	
2.0 D-4D	01/02 →	66	90	LG		[+]	**PF0408**	131,6×57,3×17,5		AK		[+]	**PF0593**	78,5×51,9×14	
2.0 D-4D	01/02 →	66	90	LG		[+]	**PF0408**	131,6×57,3×17,5		LG		[+]	**PF0407**	95,62×37,7×15,8	
2.0 D-4D	01/02 →	81	110	LG		[+]	**PF0408**	131,6×57,3×17,5		AK		[+]	**PF0593**	78,5×51,9×14	
2.0 D-4D	01/02 →	81	110	LG		[+]	**PF0408**	131,6×57,3×17,5		LG		[+]	**PF0407**	95,62×37,7×15,8	
2.0 D-4D	05/03 →	85	116	LG		[+]	**PF0408**	131,6×57,3×17,5		AK		[+]	**PF0593**	78,5×51,9×14	

		KW	CV	SiS	i	W.i.	MAGNETI MARELLI	W×H×Th (mm)	Extra kit [Opt]	SiS	i	W.i.	MAGNETI MARELLI	W×H×Th (mm)	Extra kit [Opt]
TOYOTA															
Corolla SW (_E12)															
2.0 D-4D	05/03 →	85	116	LG		[+]	**PF0408**	131,6×57,3×17,5		LG		[+]	**PF0407**	95,62×37,7×15,8	
2.2 D4d	11/06 →	130	177	LG		[+]	**PF0408**	131,6×57,3×17,5		AK		[+]	**PF0593**	78,5×51,9×14	
2.2 D4d	11/06 →	130	177	LG		[+]	**PF0408**	131,6×57,3×17,5		LG		[+]	**PF0407**	95,62×37,7×15,8	
Corolla (NRE18_, ZRE18_, NDE18_)															
1.33	06/13 →	73	99	BSC		[+]	**PF0708**	134,2×57,1×18,7							
1.4 D-4D	06/13 →	66	90	BSC		[+]	**PF0708**	134,2×57,1×18,7							
1.6	06/13 →	97	132	BSC		[+]	**PF0708**	134,2×57,1×18,7							
1.6 BiFuel	06/13 →	90	122	BSC		[+]	**PF0708**	134,2×57,1×18,7							
1.8 VVTi	06/13 →	98	133	BSC		[+]	**PF0708**	134,2×57,1×18,7							
1.8 VVTi	06/13 →	103	140	BSC		[+]	**PF0708**	134,2×57,1×18,7							
Corolla MPV I Verso (E12)															
1.4 D4d	06/04 →	66	90	AK		[-]	**PF0493**	117,5×58,7×17,5		AK		[+]	**PF0593**	78,5×51,9×14	
1.4 D4d	06/04 →	66	90	AK		[-]	**PF0493**	117,5×58,7×17,5		LG		[+]	**PF0407**	95,62×37,7×15,8	
1.4 VVT-i	01/02 → 05/04	71	97	AK		[-]	**PF0493**	117,5×58,7×17,5		AK		[+]	**PF0593**	78,5×51,9×14	
1.4 VVT-i	01/02 → 05/04	71	97	AK		[-]	**PF0493**	117,5×58,7×17,5		LG		[+]	**PF0407**	95,62×37,7×15,8	
1.6 VVT-i	01/02 → 05/04	81	110	AK		[-]	**PF0493**	117,5×58,7×17,5		AK		[+]	**PF0593**	78,5×51,9×14	
1.6 VVT-i	01/02 → 05/04	81	110	AK		[-]	**PF0493**	117,5×58,7×17,5		LG		[+]	**PF0407**	95,62×37,7×15,8	
1.8	03/04 →	92	125	AK		[-]	**PF0493**	117,5×58,7×17,5		AK		[+]	**PF0593**	78,5×51,9×14	
1.8	03/04 →	92	125	AK		[-]	**PF0493**	117,5×58,7×17,5		LG		[+]	**PF0407**	95,62×37,7×15,8	
1.8 VVT-i	01/02 → 05/04	99	135	AK		[-]	**PF0493**	117,5×58,7×17,5		AK		[+]	**PF0593**	78,5×51,9×14	
1.8 VVT-i	01/02 → 05/04	99	135	AK		[-]	**PF0493**	117,5×58,7×17,5		LG		[+]	**PF0407**	95,62×37,7×15,8	
1.8 VVTi All-wheel Drive	10/01 → 02/04	99	135	AK		[-]	**PF0493**	117,5×58,7×17,5		AK		[+]	**PF0593**	78,5×51,9×14	
1.8 VVTi All-wheel Drive	10/01 → 02/04	99	135	AK		[-]	**PF0493**	117,5×58,7×17,5		LG		[+]	**PF0407**	95,62×37,7×15,8	
2.0 D-4D	01/02 → 05/04	66	90	AK		[-]	**PF0493**	117,5×58,7×17,5		AK		[+]	**PF0593**	78,5×51,9×14	
2.0 D-4D	01/02 → 05/04	66	90	AK		[-]	**PF0493**	117,5×58,7×17,5		LG		[+]	**PF0407**	95,62×37,7×15,8	
2.0 D4d	06/04 →	85	116	AK		[-]	**PF0493**	117,5×58,7×17,5		AK		[+]	**PF0593**	78,5×51,9×14	
2.0 D4d	06/04 →	85	116	AK		[-]	**PF0493**	117,5×58,7×17,5		LG		[+]	**PF0407**	95,62×37,7×15,8	
Corolla MPV II Verso (ZER,ZZE,R1)															
1.3 VVTi	03/04 →	64	87	BSC		[+]	**PF0402**	150,8×63,1×18,7	OK038	BSC		[+]	**PF0403**	101,8×46,1×16,3	OK040
1.4 D4d	03/04 →	66	90	BSC		[+]	**PF0402**	150,8×63,1×18,7	OK038	BSC		[+]	**PF0403**	101,8×46,1×16,3	OK040
1.5	03/04 →	80	109	BSC		[+]	**PF0402**	150,8×63,1×18,7	OK038	BSC		[+]	**PF0403**	101,8×46,1×16,3	OK040
1.6	04/04 →	81	110	BSC		[+]	**PF0402**	150,8×63,1×18,7	OK038	BSC		[+]	**PF0403**	101,8×46,1×16,3	OK040
1.8	04/04 →	95	129	BSC		[+]	**PF0402**	150,8×63,1×18,7	OK038	BSC		[+]	**PF0403**	101,8×46,1×16,3	OK040
1.8	03/04 →	92	125	BSC		[+]	**PF0402**	150,8×63,1×18,7	OK038	BSC		[+]	**PF0403**	101,8×46,1×16,3	OK040
2.0 D-4D	04/04 →	85	116	BSC		[+]	**PF0402**	150,8×63,1×18,7	OK038	BSC		[+]	**PF0403**	101,8×46,1×16,3	OK040
2.2 D-4D	10/05 →	130	177	BSC		[+]	**PF0402**	150,8×63,1×18,7	OK038	BSC		[+]	**PF0403**	101,8×46,1×16,3	OK040
2.2 D-4D	10/05 →	100	136	BSC		[+]	**PF0402**	150,8×63,1×18,7	OK038	BSC		[+]	**PF0403**	101,8×46,1×16,3	OK040
Corona															
1.6	83 → 88			AK		[-]	**PF0405**	119,7×47,5×15							
1.6i	88 → 92			AK	13"	[-]	**PF0405**	119,7×47,5×15							
1.6i	92 →			AK		[+]	**PF0406**	133,2×53×17,5		AK		[+]	**PF0492**	107,8×42,6×15,5	
1.8	83 → 88			AK		[-]	**PF0405**	119,7×47,5×15							

		KW	CV	SiS	i	W.i.	MAGNETI MARELLI	W×H×Th (mm)	Extra kit [Opt]	SiS	i	W.i.	MAGNETI MARELLI	W×H×Th (mm)	Extra kit [Opt]
TOYOTA															
Corona															
1.8i	92→			AK		[+]	PF0406	133,2×53×17,5		AK		[+]	PF0492	107,8×42,6×15,5	
2.0	83→88			AK		[-]	PF0405	119,7×47,5×15							
2.0i	88→92			AK	13"	[-]	PF0405	119,7×47,5×15							
2.0i	92→			AK		[+]	PF0406	133,2×53×17,5		AK		[+]	PF0492	107,8×42,6×15,5	
2.0 D	83→88			AK		[-]	PF0405	119,7×47,5×15							
2.0 D	88→92			AK	13"	[-]	PF0405	119,7×47,5×15							
2.0 D	92→			AK		[+]	PF0406	133,2×53×17,5		AK		[+]	PF0492	107,8×42,6×15,5	
Curren Coupé															
1.6	09/89→10/93	77	105	AK		[+]	PF0406	133,2×53×17,5		AK		[+]	PF0492	107,8×42,6×15,5	
1.8	11/93→10/98	85	116	AK		[+]	PF0406	133,2×53×17,5		AK		[+]	PF0492	107,8×42,6×15,5	
1.8	10/95→10/98	92	125	AK		[+]	PF0406	133,2×53×17,5		AK		[+]	PF0492	107,8×42,6×15,5	
2.0	09/89→10/93	116	158	AK		[+]	PF0406	133,2×53×17,5		AK		[+]	PF0492	107,8×42,6×15,5	
2.0	11/93→10/98	129	175	AK		[+]	PF0406	133,2×53×17,5		AK		[+]	PF0492	107,8×42,6×15,5	
2.0 Turbo 4x4	09/89→10/93	150	204	AK		[+]	PF0406	133,2×53×17,5		AK		[+]	PF0492	107,8×42,6×15,5	
2.0 Turbo GT4 4x4	11/93→10/96	129	175	AK		[+]	PF0406	133,2×53×17,5		AK		[+]	PF0492	107,8×42,6×15,5	
2.2	09/89→09/94	97	132	AK		[+]	PF0406	133,2×53×17,5		AK		[+]	PF0492	107,8×42,6×15,5	
2.2	10/95→10/98	100	136	AK		[+]	PF0406	133,2×53×17,5		AK		[+]	PF0492	107,8×42,6×15,5	
Cynos Coupé															
1.3	08/95→04/00	65	88	AK		[-]	PF0405	119,7×47,5×15							
1.5	06/88→07/95	85	116	AK		[-]	PF0405	119,7×47,5×15							
1.5	08/95→04/00	81	110	AK		[-]	PF0405	119,7×47,5×15							
Fortuner Off-Road (N2_)															
2.7 VVTi	06/04→	118	160	ST		[+]	PF0495	119,2×68×17							
2.7 VVTi 4x4	06/04→	118	160	ST		[+]	PF0495	119,2×68×17							
3.0 D	08/09→	125	170	ST		[+]	PF0495	119,2×68×17							
4.0 VVTi	01/10→	175	238	ST		[+]	PF0495	119,2×68×17							
Hilux Pick-up (_N_)															
2.0	08/97→07/05	81	110	ST		[+]	PF0635	119,2×72×15,0							
2.0	11/97→10/02	80	109	ST		[+]	PF0635	119,2×72×15,0							
2.4	08/94→07/05	107	145	ST		[+]	PF0635	119,2×72×15,0							
2.4 All-wheel Drive	08/00→07/05	107	145	ST		[+]	PF0495	119,2×68×17							
2.4 D	03/95→	58	79	ST		[+]	PF0635	119,2×72×15,0							
2.4 i 4WD	08/97→	103	140	ST		[+]	PF0635	119,2×72×15,0							
2.4 TD 4WD	08/98→01/02	66	90	ST		[+]	PF0635	119,2×72×15,0							
2.5 D-4D	11/01→	65	88	ST		[+]	PF0495	119,2×68×17							
2.5 D-4D 4WD	11/01→	75	102	ST		[+]	PF0495	119,2×68×17							
2.7	08/01→07/04	107	145	ST		[+]	PF0495	119,2×68×17							
2.7	08/94→07/00	110	150	ST		[+]	PF0635	119,2×72×15,0							
2.7 4WD	08/94→07/00	110	150	ST		[+]	PF0635	119,2×72×15,0							
2.8 D 4WD	08/94→07/01	61	83	ST		[+]	PF0635	119,2×72×15,0							
3.0	08/01→07/05	105	143	ST		[+]	PF0495	119,2×68×17							
3.0 D	11/97→04/05	65	88	ST		[+]	PF0635	119,2×72×15,0							

		KW	CV	SiS	i	W.i.	MAGNETI MARELLI	W×H×Th (mm)	Extra kit [Opt]	SiS	i	W.i.	MAGNETI MARELLI	W×H×Th (mm)	Extra kit [Opt]
TOYOTA															
Hilux Pick-up (_N_)															
3.0 D All-wheel Drive	11/97 → 04/05	65	88	ST		[+]	**PF0635**	119,2×72×15,0							
2.7 All-wheel Drive	11/97 → 04/05	108	147	ST		[+]	**PF0635**	119,2×72×15,0							
3.0 4WD	08/01 → 07/05	105	143	ST		[+]	**PF0495**	119,2×68×17							
3.0 D	08/02 → 07/04	67	91	ST		[+]	**PF0495**	119,2×68×17							
3.0 D	12/00 → 04/05	71	97	ST	(LN14_)	[+]	**PF0495**	119,2×68×17							
3.0 D 4WD	08/02 → 07/05	67	91	ST		[+]	**PF0495**	119,2×68×17							
3.0 D All-wheel Drive	11/01 → 04/05	87	118	ST		[+]	**PF0495**	119,2×68×17							
3.0 D All-wheel Drive 4x4	12/00 → 04/05	71	97	ST		[+]	**PF0495**	119,2×68×17							
3.4	08/01 → 07/05	131	178	ST		[+]	**PF0495**	119,2×68×17							
3.4	08/00 → 07/05	140	190	ST		[+]	**PF0495**	119,2×68×17							
3.4 4WD	08/01 → 07/05	131	178	ST		[+]	**PF0495**	119,2×68×17							
3.4 All-wheel Drive	08/94 → 07/00	136	185	ST		[+]	**PF0635**	119,2×72×15,0							
3.4 All-wheel Drive	08/00 → 07/05	140	190	ST		[+]	**PF0495**	119,2×68×17							
Hilux III Pick-up															
2.0	08/05 →	108	147	ST		[+]	**PF0495**	119,2×68×17							
2.5 D 4x4	08/05 →	75	102	ST		[+]	**PF0495**	119,2×68×17							
2.5 D-4D	12/07 →	88	120	ST		[+]	**PF0495**	119,2×68×17							
2.5 D-4D	06/06 →	75	102	ST		[+]	**PF0495**	119,2×68×17							
2.5 D-4D 4x4	12/07 →	88	120	ST		[+]	**PF0495**	119,2×68×17							
2.5 D-4D 4x4	12/07 →	106	144	ST		[+]	**PF0495**	119,2×68×17							
2.7	08/05 →	118	160	ST		[+]	**PF0495**	119,2×68×17							
2.7 All-wheel Drive	08/05 →	118	160	ST		[+]	**PF0495**	119,2×68×17							
3.0	08/05 → 09/06	120	163	ST	(KUN16)	[+]	**PF0495**	119,2×68×17							
3.0 All-wheel Drive 4x4	08/05 → 09/06	120	163	ST		[+]	**PF0495**	119,2×68×17							
3.0 D	10/06 →	126	171	ST		[+]	**PF0495**	119,2×68×17							
3.0 D-4D 4x4	12/07 →	126	171	ST		[+]	**PF0495**	119,2×68×17							
4.0	08/05 →	175	238	ST		[+]	**PF0495**	119,2×68×17							
4.0 All-wheel Drive	08/05 →	175	238	ST		[+]	**PF0495**	119,2×68×17							
iQ (_GJ/_AJ)															
1.0	01/09 →	50	68	AK		[+]	**PF0784**	116,4×51,1×16,6		AK		[-]	**PF0629**	98,6×42,5×14,8	
1.33	01/09 →	69	94	AK		[+]	**PF0784**	116,4×51,1×16,6		AK		[-]	**PF0629**	98,6×42,5×14,8	
1.33	01/09 →	72	98	AK		[+]	**PF0784**	116,4×51,1×16,6		AK		[-]	**PF0629**	98,6×42,5×14,8	
1.4 D-4D	01/09 →	66	90	AK		[+]	**PF0784**	116,4×51,1×16,6		AK		[-]	**PF0629**	98,6×42,5×14,8	



		KW	CV	SiS	i	W.i.	MAGNETI MARELLI	W×H×Th (mm)	Extra kit [Opt]	SiS	i	W.i.	MAGNETI MARELLI	W×H×Th (mm)	Extra kit [Opt]
TOYOTA															
Land Cruiser 70 (J7)															
2.4i	11/88 → 92			ST		[+]	**PF0401**	119,2×68×15,0							
2.4 TD	11/88 → 92			ST		[+]	**PF0401**	119,2×68×15,0							
3.0i V6	11/88 → 92			ST		[+]	**PF0401**	119,2×68×15,0							
3.0 TD	11/88 → 92			ST		[+]	**PF0401**	119,2×68×15,0							
Land Cruiser 80 (J8)															
4.0i SW	92 → 97									ST		[-]	**PF0705**	116,1×44×15,3	
4.0	90 → 97			ST		[+]	**PF0401**	119,2×68×15,0		ST		[-]	**PF0705**	116,1×44×15,3	
4.2 TD SW	92 → 97									ST		[-]	**PF0705**	116,1×44×15,3	
4.2 D	90 → 97			ST		[+]	**PF0401**	119,2×68×15,0		ST		[-]	**PF0705**	116,1×44×15,3	
4.2 TD	90 → 97			ST		[+]	**PF0401**	119,2×68×15,0		ST		[-]	**PF0705**	116,1×44×15,3	
4.2 TD 24V	90 → 97			ST		[+]	**PF0401**	119,2×68×15,0		ST		[-]	**PF0705**	116,1×44×15,3	
4.5i V6 24 SW	92 → 97									ST		[-]	**PF0705**	116,1×44×15,3	
4.5 24V	90 → 97			ST		[+]	**PF0401**	119,2×68×15,0		ST		[-]	**PF0705**	116,1×44×15,3	
Land Cruiser 90 (J9)															
3.0i TD	04/96 →			ST		[+]	**PF0635**	119,2×72×15,0		ST		[-]	**PF0705**	116,1×44×15,3	
3.0i TD	04/96 →			ST		[+]	**PF0401**	119,2×68×15,0		ST		[-]	**PF0705**	116,1×44×15,3	
3.0 D-4D	04/96 →			ST		[+]	**PF0635**	119,2×72×15,0		ST		[-]	**PF0705**	116,1×44×15,3	
3.0i D-4D	04/96 →			ST		[+]	**PF0401**	119,2×68×15,0		ST		[-]	**PF0705**	116,1×44×15,3	
3.4i V6 24V	04/96 →			ST		[+]	**PF0635**	119,2×72×15,0		ST		[-]	**PF0705**	116,1×44×15,3	
3.4i V6 24V	04/96 →			ST		[+]	**PF0401**	119,2×68×15,0		ST		[-]	**PF0705**	116,1×44×15,3	
Land Cruiser 100 (UZJ100)															
3.0 D-4D	01/03 →			ST		[+]	**PF0409**	134,6×77,1×17							
4.0i	01/03 →			ST		[+]	**PF0409**	134,6×77,1×17							
Land Cruiser (J12)															
2.7	09/02 → 08/04	112	152	ST	(RZJ12)	[+]	**PF0409**	134,6×77,1×17		ST		[-]	**PF0705**	116,1×44×15,3	
2.7	11/03 →	120	163	ST	(TRJ12)	[+]	**PF0409**	134,6×77,1×17		ST		[-]	**PF0705**	116,1×44×15,3	
3.0 D	04/02 →	70	95	ST		[+]	**PF0409**	134,6×77,1×17		ST		[-]	**PF0705**	116,1×44×15,3	
3.0 D-4D	01/03 →	120	163	ST	(KDJ120)	[+]	**PF0409**	134,6×77,1×17		ST		[-]	**PF0705**	116,1×44×15,3	
3.0 D-4D	08/04 →	122	166	ST	(KDJ120)	[+]	**PF0409**	134,6×77,1×17		ST		[-]	**PF0705**	116,1×44×15,3	
3.0 D-4D	01/07 →	127	173	ST	(KDJ120)	[+]	**PF0409**	134,6×77,1×17		ST		[-]	**PF0705**	116,1×44×15,3	
3.0 D-4D	09/02 →	92	125	ST	(KZJ12)	[+]	**PF0409**	134,6×77,1×17		ST		[-]	**PF0705**	116,1×44×15,3	
3.4	09/02 → 08/04	136	185	ST		[+]	**PF0409**	134,6×77,1×17		ST		[-]	**PF0705**	116,1×44×15,3	
4.0	09/02 → 08/04	179	243	ST		[+]	**PF0409**	134,6×77,1×17		ST		[-]	**PF0705**	116,1×44×15,3	
4.0	01/03 →	183	249	ST	(GRJ12)	[+]	**PF0409**	134,6×77,1×17		ST		[-]	**PF0705**	116,1×44×15,3	
4.5 D	02/05 →	151	205	ST		[+]	**PF0409**	134,6×77,1×17		ST		[-]	**PF0705**	116,1×44×15,3	
MR2															
GT T.	85 → 90			AK		[-]	**PF0405**	119,7×47,5×15		AK		[+]	**PF0492**	107,8×42,6×15,5	
GTI Twin Cam	85 → 90			AK	+ABS	[-]	**PF0405**	119,7×47,5×15		AK		[+]	**PF0492**	107,8×42,6×15,5	
1.8	12/99 → 07			AK	(ZZW3)	[+]	**PF0592**	116,4×51,4×16,5							
2.0i 16V GT	85 → 90			AK		[-]	**PF0405**	119,7×47,5×15		AK		[+]	**PF0492**	107,8×42,6×15,5	
2.0i	92 → 09/99			AK	(SW20)	[+]	**PF0509**	141×56,5×15,5							
Paseo Cabriolet (EL54)															
1.5 16V	10/96 → 03/99	66	90	AK		[-]	**PF0405**	119,7×47,5×15							

		KW	CV	SiS	i	W.i.	MAGNETI MARELLI	W×H×Th (mm)	Extra kit [Opt]	SiS	i	W.i.	MAGNETI MARELLI	W×H×Th (mm)	Extra kit [Opt]
TOYOTA															
Paseo Coupé (EL44)															
1.5	04/91 → 08/95	74	101	AK		[-]	**PF0405**	119,7×47,5×15							
1.5	08/95 → 07/99	85	116	AK		[-]	**PF0405**	119,7×47,5×15							
1.5 16V	08/95 → 07/99	66	90	AK		[-]	**PF0405**	119,7×47,5×15							
Picnic (_XM10)															
2.0	01/01 → 12/01	90	122	AK		[-]	**PF0406**	133,2×53×17,5							
2.0	06/00 → 01/03	100	136	AK		[-]	**PF0406**	133,2×53×17,5							
2.0 16V	05/96 → 12/01	94	128	AK	(SXM10_)	[-]	**PF0406**	133,2×53×17,5							
2.2 D	08/97 → 12/01	66	90	AK	(CMX10_)	[-]	**PF0406**	133,2×53×17,5							
Previa (CLR3_, ACR3_)															
2.0	10/00 → 08/03	94	128							ST		[+]	**PF0598**	112,5×43×16,5	
2.0 D-4D	03/01 →	85	116							ST		[+]	**PF0598**	112,5×43×16,5	
2.4	10/05 →	125	170							ST		[+]	**PF0598**	112,5×43×16,5	
2.4 4x4	07/02 → 12/05	96	131							ST		[+]	**PF0598**	112,5×43×16,5	
2.4 4x4	10/05 →	125	170							ST		[+]	**PF0598**	112,5×43×16,5	
2.4 16V	08/00 →	115	156							ST		[+]	**PF0598**	112,5×43×16,5	
2.4 Hybrid	10/05 →	96	131							ST		[+]	**PF0598**	112,5×43×16,5	
2.4 Hybrid 4x4	10/06 →	110	150							ST		[+]	**PF0598**	112,5×43×16,5	
2.4 Hybrid 4x4	10/05 → 09/06	96	131							ST		[+]	**PF0598**	112,5×43×16,5	
Prius I (NHW_)															
1.5	05/00 → 01/04	53	72	AK		[+]	**PF0592**	116,4×51,4×16,5		AK		[+]	**PF0593**	78,5×51,9×14	
Prius II Hatchback															
1.5	08/03 →	57	78	AK		[+]	**PF0592**	116,4×51,4×16,5		AK		[+]	**PF0593**	78,5×51,9×14	
Prius III (ZVW3_)															
1.8 Hybrid	01/09 →	73	99	AK		[+]	**PF0627**	122,8×54,3×17,5		AK		[+]	**PF0630**	98,6×42,5×14,3	
Prius MPV III (ZVW4_)															
1.8 Hybrid	05/11 →	73	99	AK		[+]	**PF0627**	122,8×54,3×17,5		AK		[+]	**PF0630**	98,6×42,5×14,3	
Rav4 I (SXA)															
2.0	06/97 → 09/99	99	135	AK		[-]	**PF0406**	133,2×53×17,5							
2.0 4x4	01/94 → 09/99	121	165	AK		[-]	**PF0406**	133,2×53×17,5							
2.0 4x4	01/94 → 09/99	99	135	AK		[-]	**PF0406**	133,2×53×17,5							
2.0 16V	06/94 → 06/00	95	129	AK		[-]	**PF0406**	133,2×53×17,5							
Electric EV	06/95 → 09/99	45	61	AK		[-]	**PF0406**	133,2×53×17,5							
Rav4 I Cabrio (SXA)															
2.0 16V	12/97 → 06/00	94	129	AK		[-]	**PF0406**	133,2×53×17,5							
Rav4 II (XA2)															
1.8 VVTi	02/01 →	92	125	AK		[-]	**PF0577**	123×60,3×17,5		AK		[+]	**PF0578**	78,3×54,1×14	
2.0 D-4D 4WD	09/01 →	85	116	AK		[-]	**PF0577**	123×60,3×17,5		AK		[+]	**PF0578**	78,3×54,1×14	
2.0 VVTi 4WD	06/00 →	110	150	AK		[-]	**PF0577**	123×60,3×17,5		AK		[+]	**PF0578**	78,3×54,1×14	
2.4 VVTi	08/03 → 01/06	120	163	AK		[-]	**PF0577**	123×60,3×17,5		AK		[+]	**PF0578**	78,3×54,1×14	
2.4 VVTi 4x4	08/03 → 10/05	112	152	AK		[-]	**PF0577**	123×60,3×17,5		AK		[+]	**PF0578**	78,3×54,1×14	

		KW	CV	SiS	i	W.i.	MAGNETI MARELLI	W×H×Th (mm)	Extra kit [Opt]	SiS	i	W.i.	MAGNETI MARELLI	W×H×Th (mm)	Extra kit [Opt]
TOYOTA															
Rav4 III (AC_)															
2.0	12/08→	116	158	ST	no x Australia/ E.Arabi	[-]	**PF0632**	146,6×57×17,5		ST		[-]	**PF0633**	96,8×49,2×15,4	
2.0	12/08→	116	158	ST		[-]	**PF0663**	139,1×55,6×17,5		ST		[-]	**PF0633**	96,8×49,2×15,4	
2.0 FWD	12/08→	116	158	ST	no x Australia/ E.Arabi	[-]	**PF0632**	146,6×57×17,5		ST		[-]	**PF0633**	96,8×49,2×15,4	
2.0 FWD	12/08→	116	158	ST		[-]	**PF0663**	139,1×55,6×17,5		ST		[-]	**PF0633**	96,8×49,2×15,4	
2.0 VVT-i	03/06→	112	152	ST	no x Australia/ E.Arabi	[-]	**PF0632**	146,6×57×17,5		ST		[-]	**PF0633**	96,8×49,2×15,4	
2.0 VVT-i	03/06→	112	152	ST		[-]	**PF0663**	139,1×55,6×17,5		ST		[-]	**PF0633**	96,8×49,2×15,4	
2.2 D-4D	03/06→	100	136	ST	no x Australia/ E.Arabi	[-]	**PF0632**	146,6×57×17,5		ST		[-]	**PF0633**	96,8×49,2×15,4	
2.2 D-4D	03/06→	100	136	ST		[-]	**PF0663**	139,1×55,6×17,5		ST		[-]	**PF0633**	96,8×49,2×15,4	
2.2 D-4D	12/08→	110	150	ST	no x Australia/ E.Arabi	[-]	**PF0632**	146,6×57×17,5		ST		[-]	**PF0633**	96,8×49,2×15,4	
2.2 D-4D	12/08→	110	150	ST		[-]	**PF0663**	139,1×55,6×17,5		ST		[-]	**PF0633**	96,8×49,2×15,4	
2.2 D-4D	12/08→	110	150	ST	no x Australia/ E.Arabi	[-]	**PF0632**	146,6×57×17,5		ST		[-]	**PF0633**	96,8×49,2×15,4	
2.2 D-4D	12/08→	110	150	ST		[-]	**PF0663**	139,1×55,6×17,5		ST		[-]	**PF0633**	96,8×49,2×15,4	
2.2 D-CAT	03/06→	130	177	ST	no x Australia/ E.Arabi	[-]	**PF0632**	146,6×57×17,5		ST		[-]	**PF0633**	96,8×49,2×15,4	
2.2 D-CAT	03/06→	130	177	ST		[-]	**PF0663**	139,1×55,6×17,5		ST		[-]	**PF0633**	96,8×49,2×15,4	
2.4 VVTi	11/05→	125	170	ST	no x Australia/ E.Arabi	[-]	**PF0632**	146,6×57×17,5		ST		[-]	**PF0633**	96,8×49,2×15,4	
2.4 VVTi	11/05→	125	170	ST		[-]	**PF0663**	139,1×55,6×17,5		ST		[-]	**PF0633**	96,8×49,2×15,4	
2.4 VVTi 4WD	11/05→	125	170	ST	no x Australia/ E.Arabi	[-]	**PF0632**	146,6×57×17,5		ST		[-]	**PF0633**	96,8×49,2×15,4	
2.4 VVTi 4WD	11/05→	125	170	ST		[-]	**PF0663**	139,1×55,6×17,5		ST		[-]	**PF0633**	96,8×49,2×15,4	
3.5 4WD	08/07→	206	280	ST	no x Australia/ E.Arabi	[-]	**PF0632**	146,6×57×17,5		ST		[-]	**PF0633**	96,8×49,2×15,4	
3.5 4WD	08/07→	206	280	ST		[-]	**PF0663**	139,1×55,6×17,5		ST		[-]	**PF0633**	96,8×49,2×15,4	
3.5 VVTi	11/05→	201	273	ST	no x Australia/ E.Arabi	[-]	**PF0632**	146,6×57×17,5		ST		[-]	**PF0633**	96,8×49,2×15,4	
3.5 VVTi	11/05→	201	273	ST		[-]	**PF0663**	139,1×55,6×17,5		ST		[-]	**PF0633**	96,8×49,2×15,4	

		KW	CV	SiS	i	W.i.	MAGNETI MARELLI	W×H×Th (mm)	Extra kit [Opt]	SiS	i	W.i.	MAGNETI MARELLI	W×H×Th (mm)	Extra kit [Opt]
TOYOTA															
Rav4 IV (ZSA4_, ALA4_)															
2.0 D4-D	12/12→	91	124	ST	16"	[-]	PF0632	146,6×57×17,5		ST		[-]	PF0633	96,8×49,2×15,4	
2.0 D4-D	12/12→	91	124	ST	17"/Europa	[-]	PF0634	167×59,4×17,5		ST		[-]	PF0633	96,8×49,2×15,4	
2.0 VVT-i	12/12→	107	146	ST	16"	[-]	PF0632	146,6×57×17,5		ST		[-]	PF0633	96,8×49,2×15,4	
2.0 VVT-i	12/12→	107	146	ST	17"/Europa	[-]	PF0634	167×59,4×17,5		ST		[-]	PF0633	96,8×49,2×15,4	
2.0 VVT-i	12/12→	111	151	ST	16"	[-]	PF0632	146,6×57×17,5		ST		[-]	PF0633	96,8×49,2×15,4	
2.0 VVT-i	12/12→	111	151	ST	17"/Europa	[-]	PF0634	167×59,4×17,5		ST		[-]	PF0633	96,8×49,2×15,4	
2.2 D4-D	12/12→	110	150	ST	16"	[-]	PF0632	146,6×57×17,5		ST		[-]	PF0633	96,8×49,2×15,4	
2.2 D4-D	12/12→	110	150	ST	17"/Europa	[-]	PF0634	167×59,4×17,5		ST		[-]	PF0633	96,8×49,2×15,4	
2.5 VVT-i	12/12→	132	180	ST	16"	[-]	PF0632	146,6×57×17,5		ST		[-]	PF0633	96,8×49,2×15,4	
2.5 VVT-i	12/12→	132	180	ST	17"/Europa	[-]	PF0634	167×59,4×17,5		ST		[-]	PF0633	96,8×49,2×15,4	
Rush Off-Road (J2_)															
1.3	03/06→	63	86	ST		[+]	PF0333	114,1×19,9×15							
1.5	03/06→	80	109	ST		[+]	PF0333	114,1×19,9×15							
1.5 4x4	03/06→	80	109	ST		[+]	PF0333	114,1×19,9×15							
Scepter Coupé															
2.2	11/92→09/96	100	136	AK		[+]	PF0406	133,2×53×17,5		AK		[+]	PF0492	107,8×42,6×15,5	
Scepter SW															
2.0	11/92→09/96	88	120	AK		[+]	PF0406	133,2×53×17,5		AK		[+]	PF0492	107,8×42,6×15,5	
2.0 TD	11/92→09/96	62	84	AK		[+]	PF0406	133,2×53×17,5		AK		[+]	PF0492	107,8×42,6×15,5	
2.2	11/92→09/96	100	136	AK		[+]	PF0406	133,2×53×17,5		AK		[+]	PF0492	107,8×42,6×15,5	
2.5	11/94→09/96	129	175	AK		[+]	PF0406	133,2×53×17,5		AK		[+]	PF0492	107,8×42,6×15,5	
Scepter 3 Volumi															
2.0	11/92→09/96	88	120	AK		[+]	PF0406	133,2×53×17,5		AK		[+]	PF0492	107,8×42,6×15,5	
2.0 TD	11/92→09/96	62	84	AK		[+]	PF0406	133,2×53×17,5		AK		[+]	PF0492	107,8×42,6×15,5	
2.2	11/92→09/96	100	136	AK		[+]	PF0406	133,2×53×17,5		AK		[+]	PF0492	107,8×42,6×15,5	
Sprinter															
1.3i 16V SW XL - GL	92→			AK		[+]	PF0406	133,2×53×17,5							
1.3i 16V XL - GL - DX - LX	92→			AK		[+]	PF0406	133,2×53×17,5							
1.5i 16V DX - LX	92→			AK		[+]	PF0406	133,2×53×17,5							
1.6i 16V GL	92→			AK		[+]	PF0406	133,2×53×17,5							
1.6i 16V SW	92→			AK		[+]	PF0406	133,2×53×17,5							
1.6i 16V LX 4WD	92→			AK		[+]	PF0406	133,2×53×17,5							
1.6i 20V GT	92→			AK		[+]	PF0406	133,2×53×17,5							
1.8i 16V DX	92→			AK		[+]	PF0406	133,2×53×17,5							
1.8i 16V DX SW	92→			AK		[+]	PF0406	133,2×53×17,5							
1.8i 16V LE	92→			AK	+AUT	[+]	PF0406	133,2×53×17,5							
1.8i 16V GT	92→			AK		[+]	PF0406	133,2×53×17,5							
2.0 Diesel DX	92→			AK		[+]	PF0406	133,2×53×17,5							
2.0 D LX	92→			AK		[+]	PF0406	133,2×53×17,5							

		KW	CV	SiS	i	W.i.	MAGNETI MARELLI	W×H×Th (mm)	Extra kit [Opt]	SiS	i	W.i.	MAGNETI MARELLI	W×H×Th (mm)	Extra kit [Opt]
TOYOTA															
Sprinter															
2.0 D LX 4WD	92→			AK		[+]	PF0406	133,2×53×17,5							
2.0 D XL SW	92→			AK		[+]	PF0406	133,2×53×17,5							
Starlet															
1.0 XL - GL	90→			AK	+ABS	[-]	PF0405	119,7×47,5×15							
1.3	90→			AK	+ABS	[-]	PF0405	119,7×47,5×15							
Tercel															
1.3 DX	82→88			AK		[-]	PF0405	119,7×47,5×15							
1.3 GL	82→88			AK		[-]	PF0405	119,7×47,5×15							
1.3 Super	82→88			AK		[-]	PF0405	119,7×47,5×15							
1.3 XL	88→89			AK		[-]	PF0405	119,7×47,5×15							
1.3 SW	88→89			AK		[-]	PF0405	119,7×47,5×15							
1.3i 16V	93→			AK		[+]	PF0406	133,2×53×17,5							
1.5 4WD	82→88			AK		[-]	PF0405	119,7×47,5×15							
1.5 4WD SW	82→88			AK		[-]	PF0405	119,7×47,5×15							
1.5 TD	93→			AK		[+]	PF0406	133,2×53×17,5							
1.5i 16V 4WD	93→			AK		[+]	PF0406	133,2×53×17,5							
1.5i 16V	93→			AK		[+]	PF0406	133,2×53×17,5							
1.5i DL	93→			AK		[+]	PF0406	133,2×53×17,5							
Urban Cruiser (NCP)															
1.33	04/10→	73	99	AK		[-]	PF0663	139,1×55,6×17,5		AK		[+]	PF0629	98,6×42,5×14,8	
1.33	04/09→	74	101	AK		[-]	PF0663	139,1×55,6×17,5		AK		[+]	PF0629	98,6×42,5×14,8	
1.4 D-4D	04/09→	66	90	AK		[-]	PF0663	139,1×55,6×17,5		AK		[+]	PF0629	98,6×42,5×14,8	
1.4 D-4D 4x4	04/09→	66	90	AK		[-]	PF0663	139,1×55,6×17,5		AK		[+]	PF0629	98,6×42,5×14,8	
1.5 VVTi	10/06→	80	109	AK		[-]	PF0663	139,1×55,6×17,5		AK		[+]	PF0629	98,6×42,5×14,8	
1.5 VVTi 4WD	04/09→	76	103	AK		[-]	PF0663	139,1×55,6×17,5		AK		[+]	PF0629	98,6×42,5×14,8	
Verso															
1.6 D4-D	11/13→	82	112	AK	(_AUR2_, _ZGR2_)	[+]	PF0665	150,9×62,5×19	OK079						
1.6	04/09→	97	132	AK		[+]	PF0665	150,9×62,5×19	OK079						
1.8	04/09→	108	147	AK		[+]	PF0665	150,9×62,5×19	OK079						
2.0 D-4D	04/09→	93	126	AK		[+]	PF0665	150,9×62,5×19	OK079						
2.2 D-4D	04/09→	110	150	AK		[+]	PF0665	150,9×62,5×19	OK079						
2.2 D-CAT	04/09→	130	177	AK		[+]	PF0665	150,9×62,5×19	OK079						
Verso S (NCP/NSP)															
1.33	11/10→	73	99	AK		[-]	PF0663	139,1×55,6×17,5		AK		[+]	PF0629	98,6×42,5×14,8	
1.33	11/10→	70	95	AK		[-]	PF0663	139,1×55,6×17,5		AK		[+]	PF0629	98,6×42,5×14,8	
1.4 D4-D	11/10→	66	90	AK		[-]	PF0663	139,1×55,6×17,5		AK		[+]	PF0629	98,6×42,5×14,8	
1.5	11/10→	80	109	AK		[-]	PF0663	139,1×55,6×17,5		AK		[+]	PF0629	98,6×42,5×14,8	
1.5 4WD	11/10→	76	103	AK		[-]	PF0663	139,1×55,6×17,5		AK		[+]	PF0629	98,6×42,5×14,8	
Yaris I (_P1_)															
1.0	01/99→09			AK	(SCP10)	[-]	PF0533	112,5×46,8×16,5							
1.0	08/99→09			AK	(SCP10)	[-]	PF0592	116,4×51,4×16,5		AK		[+]	PF0593	78,5×51,9×14	
1.0	01/01→09			BSC	(SCP10)	[+]	PF0410	130,9×44,9×16,7							
1.3	01/99→09			AK	(NCP10)	[-]	PF0533	112,5×46,8×16,5							

		KW	CV	SiS	i	W.i.	MAGNETI MARELLI	W×H×Th (mm)	Extra kit [Opt]	SiS	i	W.i.	MAGNETI MARELLI	W×H×Th (mm)	Extra kit [Opt]
TOYOTA															
Yaris I (_P1_)															
1.3	08/99 → 09			AK	(NCP10)	[-]	**PF0592**	116,4×51,4×16,5		AK		[+]	**PF0593**	78,5×51,9×14	
1.3	01/01 → 09			BSC	(NCP12)	[+]	**PF0410**	130,9×44,9×16,7							
1.4 TD	10/00 → 09			AK	(NLP10)	[-]	**PF0533**	112,5×46,8×16,5							
1.4 TD	10/00 → 09			AK	(NLP10)	[-]	**PF0592**	116,4×51,4×16,5		AK		[+]	**PF0593**	78,5×51,9×14	
1.4 D-4D	12/01 → 09			BSC	(NLP)	[+]	**PF0410**	130,9×44,9×16,7							
1.5	01/01 → 09			AK	(NCP13)	[-]	**PF0592**	116,4×51,4×16,5							
Yaris II (P9)															
1.0	06 →			AK	Made in J (+VSC-TRC)	[-]	**PF0627**	122,8×54,3×17,5		AK		[+]	**PF0629**	98,6×42,5×14,8	
1.0	06 →			AK	Made in (J)	[-]	**PF0628**	122,8×49,7×17		AK		[+]	**PF0629**	98,6×42,5×14,8	
1.0	06 →			ATE	Made in (F)	[+]	**PF0404**	150,3×58×17,5		ATE		[+]	**PF0631**	123,1×43,7×14,5	
1.3	06 →			AK	Made in J (+VSC-TRC)	[-]	**PF0627**	122,8×54,3×17,5		AK		[+]	**PF0629**	98,6×42,5×14,8	
1.3	06 →			AK	Made in (J)	[-]	**PF0628**	122,8×49,7×17		AK		[+]	**PF0629**	98,6×42,5×14,8	
1.3	06 →			ATE	Made in (F)	[+]	**PF0404**	150,3×58×17,5		ATE		[+]	**PF0631**	123,1×43,7×14,5	
1.4 D-4D	06 →			AK	Made in J (+VSC-TRC)	[-]	**PF0627**	122,8×54,3×17,5		AK		[+]	**PF0629**	98,6×42,5×14,8	
1.4 D-4D	06 →			AK	Made in (J)	[-]	**PF0628**	122,8×49,7×17		AK		[+]	**PF0629**	98,6×42,5×14,8	
1.4 D-4D	06 →			ATE	Made in (F)	[+]	**PF0404**	150,3×58×17,5		ATE		[+]	**PF0631**	123,1×43,7×14,5	
Yaris II (P13)															
1.0	09/11 →			ATE	Made in (F)	[+]	**PF0404**	150,3×58×17,5		ATE	Made in (F)	[+]	**PF0631**	123,1×43,7×14,5	
1.0	09/11 →			AK	Made in (J)	[-]	**PF0627**	122,8×54,3×17,5		AK		[+]	**PF0629**	98,6×42,5×14,8	
1.2	10/13 →	63	86	ATE	Made in (F)	[+]	**PF0404**	150,3×58×17,5		ATE	Made in (F)	[+]	**PF0631**	123,1×43,7×14,5	
1.2	10/13 →	63	86	AK	Made in (J)	[-]	**PF0627**	122,8×54,3×17,5		AK		[+]	**PF0629**	98,6×42,5×14,8	
1.3	09/11 →			ATE	Made in (F)	[+]	**PF0404**	150,3×58×17,5		ATE	Made in (F)	[+]	**PF0631**	123,1×43,7×14,5	
1.3	09/11 →			AK	Made in (J)	[-]	**PF0627**	122,8×54,3×17,5		AK		[+]	**PF0629**	98,6×42,5×14,8	
1.3 4WD	09/11 →			ATE	Made in (F)	[+]	**PF0404**	150,3×58×17,5		ATE	Made in (F)	[+]	**PF0631**	123,1×43,7×14,5	
1.3 4WD	09/11 →			AK	Made in (J)	[-]	**PF0627**	122,8×54,3×17,5		AK		[+]	**PF0629**	98,6×42,5×14,8	
1.4 D-4D	09/11 →			ATE	Made in (F)	[+]	**PF0404**	150,3×58×17,5		ATE	Made in (F)	[+]	**PF0631**	123,1×43,7×14,5	
1.4 D-4D	09/11 →			AK	Made in (J)	[-]	**PF0627**	122,8×54,3×17,5		AK		[+]	**PF0629**	98,6×42,5×14,8	
1.5 Hybrid	09/11 →			ATE	Made in (F)	[+]	**PF0404**	150,3×58×17,5		ATE	Made in (F)	[+]	**PF0631**	123,1×43,7×14,5	
1.5 Hybrid	09/11 →			AK	Made in (J)	[-]	**PF0627**	122,8×54,3×17,5		AK		[+]	**PF0629**	98,6×42,5×14,8	
Yaris Verso II (NC/LP)															
1.3	11/99 →	63	86	AK	(NCP22)	[-]	**PF0592**	116,4×51,4×16,5		AK		[+]	**PF0593**	78,5×51,9×14	
1.3	11/99 →	62	84	AK	(NCP22)	[-]	**PF0592**	116,4×51,4×16,5		AK		[+]	**PF0593**	78,5×51,9×14	
1.4 D-4D	12/01 →	55	75	BSC	(NLP22)	[-]	**PF0410**	130,9×44,9×16,7		AK		[+]	**PF0593**	78,5×51,9×14	
1.5	03/00 →	78	106	AK	(NCP21)	[-]	**PF0592**	116,4×51,4×16,5		AK		[+]	**PF0593**	78,5×51,9×14	
1.5	05/03 →	77	105	AK	(NCP21)	[-]	**PF0592**	116,4×51,4×16,5		AK		[+]	**PF0593**	78,5×51,9×14	

		KW	CV	SiS	i	W.i.	MAGNETI MARELLI	W×H×Th (mm)	Extra kit [Opt]	SiS	i	W.i.	MAGNETI MARELLI	W×H×Th (mm)	Extra kit [Opt]
VAUXHALL															
Astra J															
1.3 CDTi	09→			ATE	Ø Disc 276/15"	[+]	**PF0694**	148×60,3×18,8		LG		[+]	**PF0433**	116,6×42,7×16,2	
1.3 CDTi	09→			ATE	Ø disc 300/16"	[+]	**PF0424**	148×61,1×18,8		LG		[+]	**PF0433**	116,6×42,7×16,2	
1.4	09→			ATE	Ø Disc 276/15"	[+]	**PF0694**	148×60,3×18,8		LG		[+]	**PF0433**	116,6×42,7×16,2	
1.4	09→			ATE	Ø disc 300/16"	[+]	**PF0424**	148×61,1×18,8		LG		[+]	**PF0433**	116,6×42,7×16,2	
1.4 T	09→			ATE	Ø Disc 276/15"	[+]	**PF0694**	148×60,3×18,8		LG		[+]	**PF0433**	116,6×42,7×16,2	
1.4 T	09→			ATE	Ø disc 300/16"	[+]	**PF0424**	148×61,1×18,8		LG		[+]	**PF0433**	116,6×42,7×16,2	
1.6	09→			ATE	Ø Disc 276/15"	[+]	**PF0694**	148×60,3×18,8		LG		[+]	**PF0433**	116,6×42,7×16,2	
1.6	09→			ATE	Ø disc 300/16"	[+]	**PF0424**	148×61,1×18,8		LG		[+]	**PF0433**	116,6×42,7×16,2	
1.6 T	09→			ATE	Ø Disc 276/15"	[+]	**PF0694**	148×60,3×18,8		LG		[+]	**PF0433**	116,6×42,7×16,2	
1.6 T	09→			ATE	Ø disc 300/16"	[+]	**PF0424**	148×61,1×18,8		LG		[+]	**PF0433**	116,6×42,7×16,2	
1.7 CDTi	09→			ATE	Ø Disc 276/15"	[+]	**PF0694**	148×60,3×18,8		LG		[+]	**PF0433**	116,6×42,7×16,2	
1.7 CDTi	09→			ATE	Ø disc 300/16"	[+]	**PF0424**	148×61,1×18,8		LG		[+]	**PF0433**	116,6×42,7×16,2	
2.0 CDTi	09→			ATE	Ø Disc 276/15"	[+]	**PF0694**	148×60,3×18,8		LG		[+]	**PF0433**	116,6×42,7×16,2	
2.0 CDTi	09→			ATE	Ø disc 300/16"	[+]	**PF0424**	148×61,1×18,8		LG		[+]	**PF0433**	116,6×42,7×16,2	
Belmont															
All types	86→			DM		[-]	**PF0354**	100×59×15,6							
Carlton I															
1.8	84→88			DM		[-]	**PF0354**	100×59×15,6		ATE		[-]	**PF0367**	61,5×61×15	
2.0	84→88			DM		[-]	**PF0354**	100×59×15,6		ATE		[-]	**PF0367**	61,5×61×15	
2.3	84→88			DM		[-]	**PF0354**	100×59×15,6		ATE		[-]	**PF0367**	61,5×61×15	
2.3 D	84→88			DM		[-]	**PF0354**	100×59×15,6		ATE		[-]	**PF0367**	61,5×61×15	
Carlton II															
1.8	88→									ATE		[-]	**PF0368**	61,5×61×15	
2.0	88→									ATE		[-]	**PF0368**	61,5×61×15	
2.3	88→									ATE		[-]	**PF0368**	61,5×61×15	
2.3 D	88→									ATE		[-]	**PF0368**	61,5×61×15	
3.0i	87→90									ATE		[-]	**PF0368**	61,5×61×15	
3.0i SW	87→90									ATE		[-]	**PF0368**	61,5×61×15	
3.0i 24V	90→									ATE		[-]	**PF0368**	61,5×61×15	

		KW	CV	SiS	i	W.i.	MAGNETI MARELLI	W×H×Th (mm)	Extra kit [Opt]	SiS	i	W.i.	MAGNETI MARELLI	W×H×Th (mm)	Extra kit [Opt]
VAUXHALL															
Cavalier															
1.3	78→			DM		[-]	**PF0354**	100×59×15,6							
1.4i	89→			DM		[-]	**PF0354**	100×59×15,6							
1.6	78→			DM		[-]	**PF0354**	100×59×15,6							
1.7 D	89→			DM		[-]	**PF0354**	100×59×15,6		ATE		[-]	**PF0359**	61,7×57,5×15,5	
1.8i	81→			DM		[-]	**PF0354**	100×59×15,6		ATE		[-]	**PF0359**	61,7×57,5×15,5	
1.9	78→			DM		[-]	**PF0354**	100×59×15,6							
2.0	78→			DM		[-]	**PF0354**	100×59×15,6							
2.0i 4WD 16V	89→									ATE		[-]	**PF0359**	61,7×57,5×15,5	
Combo (X12)															
1.4	02/12→	70	95	BSC	Ø Disc 284	[+]	**PF0214**	137×57,3×19	OK033						
1.4	02/12→	70	95	ATE		[+]	**PF0288**	155,2×71,3×20							
1.4	02/12→	88	120	BSC	Ø Disc 284	[+]	**PF0214**	137×57,3×19	OK033						
1.4	02/12→	88	120	ATE		[+]	**PF0288**	155,2×71,3×20							
1.6 CDTI	02/12→	66	90	BSC	Ø Disc 284	[+]	**PF0214**	137×57,3×19	OK033						
1.6 CDTI	02/12→	66	90	ATE		[+]	**PF0288**	155,2×71,3×20							
1.6 CDTI	02/12→	74	101	BSC	Ø Disc 284	[+]	**PF0214**	137×57,3×19	OK033						
1.6 CDTI	02/12→	74	101	ATE		[+]	**PF0288**	155,2×71,3×20							
1.6 CDTI	02/12→	77	105	BSC	Ø Disc 284	[+]	**PF0214**	137×57,3×19	OK033						
1.6 CDTI	02/12→	77	105	ATE		[+]	**PF0288**	155,2×71,3×20							
2.0 CDTI	02/12→	99	135	BSC	Ø Disc 284	[+]	**PF0214**	137×57,3×19	OK033						
2.0 CDTI	02/12→	99	135	ATE		[+]	**PF0288**	155,2×71,3×20							
1.4 CNG	11/11→	88	120	BSC	Ø Disc 284	[+]	**PF0214**	137×57,3×19	OK033						
1.4 CNG	11/11→	88	120	ATE		[+]	**PF0288**	155,2×71,3×20							
Combo Furgonato (X12)															
1.4	02/12→	70	95	BSC	Ø Disc 284	[+]	**PF0214**	137×57,3×19	OK033						
1.4	02/12→	70	95	ATE		[+]	**PF0288**	155,2×71,3×20							
1.4	02/12→	88	120	BSC	Ø Disc 284	[+]	**PF0214**	137×57,3×19	OK033						
1.4	02/12→	88	120	ATE		[+]	**PF0288**	155,2×71,3×20							
1.6 CDTI	02/12→	66	90	BSC	Ø Disc 284	[+]	**PF0214**	137×57,3×19	OK033						
1.6 CDTI	02/12→	66	90	ATE		[+]	**PF0288**	155,2×71,3×20							
1.6 CDTI	02/12→	77	105	BSC	Ø Disc 284	[+]	**PF0214**	137×57,3×19	OK033						
1.6 CDTI	02/12→	77	105	ATE		[+]	**PF0288**	155,2×71,3×20							
1.3 CDTI	02/12→	66	90	BSC	Ø Disc 284	[+]	**PF0214**	137×57,3×19	OK033						
1.3 CDTI	02/12→	66	90	ATE		[+]	**PF0288**	155,2×71,3×20							
1.6 CDTI	02/12→	74	101	BSC	Ø Disc 284	[+]	**PF0214**	137×57,3×19	OK033						
1.6 CDTI	02/12→	74	101	ATE		[+]	**PF0288**	155,2×71,3×20							
2.0 CDTI	02/12→	99	135	BSC	Ø Disc 284	[+]	**PF0214**	137×57,3×19	OK033						
2.0 CDTI	02/12→	99	135	ATE		[+]	**PF0288**	155,2×71,3×20							
Frontera															
Mk II 2.2i	98→									ST		[+]	**PF0497**	109,5×42,5×16	
Mk II 2.2 TDI	98→									ST		[+]	**PF0497**	109,5×42,5×16	
Mk II 3.2i	98→									ST		[+]	**PF0497**	109,5×42,5×16	





KW	CV	SiS	i	W.i.	MAGNETI MARELLI	W×H×Th (mm)	Extra kit [Opt]	SiS	i	W.i.	MAGNETI MARELLI	W×H×Th (mm)	Extra kit [Opt]
VAUXHALL													
Insignia Berlina													
1.6 T.	08→	LG		[+]	**PF0363**	184,7×65,8×17		LG	Ø Disc 292	[+]	**PF0690**	106,5×47,1×17,2	OK071
1.6 T.	08→	MN	(POCJ_60) 16"	[+]	**PF0723**	131,5×59,6×19		LG	Ø Disc 315	[+]	**PF0690**	106,5×47,1×17,2	OK075
1.6 T.	08→	MN	(POCJ_61) 17"	[+]	**PF0724**	142×66,7×18,8		LG	Ø Disc 315	[+]	**PF0690**	106,5×47,1×17,2	OK075
1.8	08→	LG		[+]	**PF0363**	184,7×65,8×17		LG	Ø Disc 292	[+]	**PF0690**	106,5×47,1×17,2	OK071
1.8	08→	MN	(POCJ_60) 16"	[+]	**PF0723**	131,5×59,6×19		LG	Ø Disc 315	[+]	**PF0690**	106,5×47,1×17,2	OK075
1.8	08→	MN	(POCJ_61) 17"	[+]	**PF0724**	142×66,7×18,8		LG	Ø Disc 315	[+]	**PF0690**	106,5×47,1×17,2	OK075
2.0 T.	08→	LG		[+]	**PF0363**	184,7×65,8×17		LG	Ø Disc 292	[+]	**PF0690**	106,5×47,1×17,2	OK071
2.0 T.	08→	MN	(POCJ_60) 16"	[+]	**PF0723**	131,5×59,6×19		LG	Ø Disc 315	[+]	**PF0690**	106,5×47,1×17,2	OK075
2.0 T.	08→	MN	(POCJ_61) 17"	[+]	**PF0724**	142×66,7×18,8		LG	Ø Disc 315	[+]	**PF0690**	106,5×47,1×17,2	OK075
2.0 Cdti	08→	LG		[+]	**PF0363**	184,7×65,8×17		LG	Ø Disc 292	[+]	**PF0690**	106,5×47,1×17,2	OK071
2.0 Cdti	08→	MN	(POCJ_60) 16"	[+]	**PF0723**	131,5×59,6×19		LG	Ø Disc 315	[+]	**PF0690**	106,5×47,1×17,2	OK075
2.0 Cdti	08→	MN	(POCJ_61) 17"	[+]	**PF0724**	142×66,7×18,8		LG	Ø Disc 315	[+]	**PF0690**	106,5×47,1×17,2	OK075
2.8 T.	08→	LG		[+]	**PF0363**	184,7×65,8×17		LG	Ø Disc 292	[+]	**PF0690**	106,5×47,1×17,2	OK071
2.8 T.	08→	MN	(POCJ_60) 16"	[+]	**PF0723**	131,5×59,6×19		LG	Ø Disc 315	[+]	**PF0690**	106,5×47,1×17,2	OK075
2.8 T.	08→	MN	(POCJ_61) 17"	[+]	**PF0724**	142×66,7×18,8		LG	Ø Disc 315	[+]	**PF0690**	106,5×47,1×17,2	OK075
Insignia SW													
1.6 T.	08→	LG		[+]	**PF0363**	184,7×65,8×17		LG	Ø Disc 292	[+]	**PF0690**	106,5×47,1×17,2	OK071
1.6 T.	08→	MN	(POCJ_60) 16"	[+]	**PF0723**	131,5×59,6×19		LG	Ø Disc 315	[+]	**PF0690**	106,5×47,1×17,2	OK075
1.6 T.	08→	MN	(POCJ_61) 17"	[+]	**PF0724**	142×66,7×18,8		LG	Ø Disc 315	[+]	**PF0690**	106,5×47,1×17,2	OK075
1.8	08→	LG		[+]	**PF0363**	184,7×65,8×17		LG	Ø Disc 292	[+]	**PF0690**	106,5×47,1×17,2	OK071
1.8	08→	MN	(POCJ_60) 16"	[+]	**PF0723**	131,5×59,6×19		LG	Ø Disc 315	[+]	**PF0690**	106,5×47,1×17,2	OK075
1.8	08→	MN	(POCJ_61) 17"	[+]	**PF0724**	142×66,7×18,8		LG	Ø Disc 315	[+]	**PF0690**	106,5×47,1×17,2	OK075
2.0 T.	08→	LG		[+]	**PF0363**	184,7×65,8×17		LG	Ø Disc 292	[+]	**PF0690**	106,5×47,1×17,2	OK071
2.0 T.	08→	MN	(POCJ_60) 16"	[+]	**PF0723**	131,5×59,6×19		LG	Ø Disc 315	[+]	**PF0690**	106,5×47,1×17,2	OK075
2.0 T.	08→	MN	(POCJ_61) 17"	[+]	**PF0724**	142×66,7×18,8		LG	Ø Disc 315	[+]	**PF0690**	106,5×47,1×17,2	OK075
2.0 Cdti	08→	LG		[+]	**PF0363**	184,7×65,8×17		LG	Ø Disc 292	[+]	**PF0690**	106,5×47,1×17,2	OK071
2.0 Cdti	08→	MN	(POCJ_60) 16"	[+]	**PF0723**	131,5×59,6×19		LG	Ø Disc 315	[+]	**PF0690**	106,5×47,1×17,2	OK075

		KW	CV	SiS	i	W.i.	MAGNETI MARELLI	W×H×Th (mm)	Extra kit [Opt]	SiS	i	W.i.	MAGNETI MARELLI	W×H×Th (mm)	Extra kit [Opt]
VAUXHALL															
Insignia SW															
2.0 Cdti	08→			MN	(POCJ_61) 17"	[+]	**PF0724**	142×66,7×18,8		LG	Ø Disc 315	[+]	**PF0690**	106,5×47,1×17,2	OK075
2.8 T.	08→			LG		[+]	**PF0363**	184,7×65,8×17		LG	Ø Disc 292	[+]	**PF0690**	106,5×47,1×17,2	OK071
2.8 T.	08→			MN	(POCJ_60) 16"	[+]	**PF0723**	131,5×59,6×19		LG	Ø Disc 315	[+]	**PF0690**	106,5×47,1×17,2	OK075
2.8 T.	08→			MN	(POCJ_61) 17"	[+]	**PF0724**	142×66,7×18,8		LG	Ø Disc 315	[+]	**PF0690**	106,5×47,1×17,2	OK075
Mokka															
1.4	06/12→	103	140	ATE		[+]	**PF0424**	148×61,1×18,8		LG		[+]	**PF0433**	116,6×42,7×16,2	
1.4	04/13→	103	140	ATE		[+]	**PF0424**	148×61,1×18,8		LG		[+]	**PF0433**	116,6×42,7×16,2	
1.6	06/12→	85	116	ATE		[+]	**PF0424**	148×61,1×18,8		LG		[+]	**PF0433**	116,6×42,7×16,2	
1.8 4x4	01/13→	103	140	ATE		[+]	**PF0424**	148×61,1×18,8		LG		[+]	**PF0433**	116,6×42,7×16,2	
1.8	01/13→	103	140	ATE		[+]	**PF0424**	148×61,1×18,8		LG		[+]	**PF0433**	116,6×42,7×16,2	
1.7 CDTI	06/12→	96	131	ATE		[+]	**PF0424**	148×61,1×18,8		LG		[+]	**PF0433**	116,6×42,7×16,2	
1.7 CDTI	06/12→	96	131	ATE		[+]	**PF0424**	148×61,1×18,8		LG		[+]	**PF0433**	116,6×42,7×16,2	
Movano															
1.9 DTI	00→01			BD		[-]	**PF0544**	138,7×66,4×18							
1.9 DTI	01→			BSC		[-]	**PF0366**	138,8×79,8×17,8		BSC		[-]	**PF0365**	115×51,3×16,8	OK033
2.2 DTI	00→01			BD		[-]	**PF0544**	138,7×66,4×18							
2.2 DTI	01→			BSC		[-]	**PF0366**	138,8×79,8×17,8		BSC		[-]	**PF0365**	115×51,3×16,8	OK033
2.5 D	00→01			BD		[-]	**PF0544**	138,7×66,4×18							
2.5 D	01→			BSC		[-]	**PF0366**	138,8×79,8×17,8		BSC		[-]	**PF0365**	115×51,3×16,8	OK033
2.8 DTI	00→01			BD		[-]	**PF0544**	138,7×66,4×18							
2.8 DTI	01→			BSC		[-]	**PF0366**	138,8×79,8×17,8		BSC		[-]	**PF0365**	115×51,3×16,8	OK033
Nova															
All types	83→			DM		[-]	**PF0354**	100×59×15,6							
Signum															
1.8 16V	06/03→			ATE		[o]	**PF0162**	155,2×69×20,2	OK025	ATE		[-]	**PF0349**	123,1×52×16,4	
1.8 16V	06/03→			ATE	Tel. 61000001→	[o]	**PF0369**	155,2×69×20,2	OK025	ATE		[-]	**PF0431**	123,1×52×16,4	
1.9 CDTi	06/04→			ATE		[o]	**PF0162**	155,2×69×20,2	OK025	ATE		[-]	**PF0349**	123,1×52×16,4	
1.9 CDTi	06/04→			ATE	Tel. 61000001→	[o]	**PF0369**	155,2×69×20,2	OK025	ATE		[-]	**PF0431**	123,1×52×16,4	
2.0 T. 16V	06/03→			ATE		[o]	**PF0162**	155,2×69×20,2	OK025	ATE		[-]	**PF0349**	123,1×52×16,4	
2.0 T. 16V	06/03→			ATE	Tel. 61000001→	[o]	**PF0369**	155,2×69×20,2	OK025	ATE		[-]	**PF0431**	123,1×52×16,4	
2.0 Dti 16V	06/03→			ATE		[o]	**PF0162**	155,2×69×20,2	OK025	ATE		[-]	**PF0349**	123,1×52×16,4	
2.0 Dti 16V	06/03→			ATE	Tel. 61000001→	[o]	**PF0369**	155,2×69×20,2	OK025	ATE		[-]	**PF0431**	123,1×52×16,4	
2.2 Dti 16V	06/03→			ATE		[o]	**PF0162**	155,2×69×20,2	OK025	ATE		[-]	**PF0349**	123,1×52×16,4	
2.2 Dti 16V	06/03→			ATE	Tel. 61000001→	[o]	**PF0369**	155,2×69×20,2	OK025	ATE		[-]	**PF0431**	123,1×52×16,4	
3.0 V6 Cdti	06/03→			ATE		[o]	**PF0162**	155,2×69×20,2	OK025	ATE		[-]	**PF0349**	123,1×52×16,4	
3.0 V6 Cdti	06/03→			ATE		[o]	**PF0612**	155×72,8×20,2		ATE		[-]	**PF0431**	123,1×52×16,4	

		KW	CV													
				SiS	i	W.i.	MAGNETI MARELLI	W×H×Th (mm)	Extra kit [Opt]	SiS	i	W.i.	MAGNETI MARELLI	W×H×Th (mm)	Extra kit [Opt]
VAUXHALL																
Signum																
3.2 V6	06/03→			ATE	31068238→	[o]	**PF0162**	155,2×69×20,2	OK025	ATE		[-]	**PF0349**	123,1×52×16,4	
3.2 V6	06/03→			ATE	31068238→	[o]	**PF0612**	155×72,8×20,2		ATE		[-]	**PF0431**	123,1×52×16,4	
Vectra C Berlina																
1.8 16V	08/02→			ATE	15"	[o]	**PF0162**	155,2×69×20,2	OK025	ATE		[-]	**PF0349**	123,1×52×16,4	
1.8 16V	08/02→			ATE	Tel. 61000001→	[o]	**PF0369**	155,2×69×20,2	OK025	ATE		[-]	**PF0431**	123,1×52×16,4	
1.9 CDTi	04/04→			ATE	15"	[o]	**PF0162**	155,2×69×20,2	OK025	ATE		[-]	**PF0349**	123,1×52×16,4	
1.9 CDTi	04/04→			ATE	Tel. 61000001→	[o]	**PF0369**	155,2×69×20,2	OK025	ATE		[-]	**PF0431**	123,1×52×16,4	
2.0 Dti 16V	08/02→			ATE	15"	[o]	**PF0162**	155,2×69×20,2	OK025	ATE		[-]	**PF0349**	123,1×52×16,4	
2.0 Dti 16V	08/02→			ATE	Tel. 61000001→	[o]	**PF0369**	155,2×69×20,2	OK025	ATE		[-]	**PF0431**	123,1×52×16,4	
2.2	08/02→			ATE	15"	[o]	**PF0162**	155,2×69×20,2	OK025	ATE		[-]	**PF0349**	123,1×52×16,4	
2.2	08/02→			ATE	Tel. 61000001→	[o]	**PF0369**	155,2×69×20,2	OK025	ATE		[-]	**PF0431**	123,1×52×16,4	
2.2 Dti 16V	08/02→			ATE	15"	[o]	**PF0162**	155,2×69×20,2	OK025	ATE		[-]	**PF0349**	123,1×52×16,4	
2.2 Dti 16V	08/02→			ATE	Tel. 61000001→	[o]	**PF0369**	155,2×69×20,2	OK025	ATE		[-]	**PF0431**	123,1×52×16,4	
3.0 CDTi	03→			ATE		[o]	**PF0612**	155×72,8×20,2		ATE		[-]	**PF0349**	123,1×52×16,4	
3.0 CDTi	03→									ATE		[-]	**PF0431**	123,1×52×16,4	
3.2i V6	03→			ATE		[o]	**PF0612**	155×72,8×20,2		ATE		[-]	**PF0349**	123,1×52×16,4	
3.2i V6	03→									ATE		[-]	**PF0431**	123,1×52×16,4	
Vectra C SW																
1.8 16V	03→			ATE	15"	[o]	**PF0162**	155,2×69×20,2	OK025	ATE		[-]	**PF0349**	123,1×52×16,4	
1.8 16V	03→			ATE	Tel. 61000001→	[o]	**PF0369**	155,2×69×20,2	OK025	ATE		[-]	**PF0431**	123,1×52×16,4	
1.9 CDTi	04/04→			ATE	15"	[o]	**PF0162**	155,2×69×20,2	OK025	ATE		[-]	**PF0349**	123,1×52×16,4	
1.9 CDTi	04/04→			ATE	Tel. 61000001→	[o]	**PF0369**	155,2×69×20,2	OK025	ATE		[-]	**PF0431**	123,1×52×16,4	
2.0 Dti 16V	03→			ATE	15"	[o]	**PF0162**	155,2×69×20,2	OK025	ATE		[-]	**PF0349**	123,1×52×16,4	
2.0 Dti 16V	03→			ATE	Tel. 61000001→	[o]	**PF0369**	155,2×69×20,2	OK025	ATE		[-]	**PF0431**	123,1×52×16,4	
2.2	03→			ATE	15"	[o]	**PF0162**	155,2×69×20,2	OK025	ATE		[-]	**PF0349**	123,1×52×16,4	
2.2	03→			ATE	Tel. 61000001→	[o]	**PF0369**	155,2×69×20,2	OK025	ATE		[-]	**PF0431**	123,1×52×16,4	
2.2 Dti 16V	03→			ATE	15"	[o]	**PF0162**	155,2×69×20,2	OK025	ATE		[-]	**PF0349**	123,1×52×16,4	
2.2 Dti 16V	03→			ATE	Tel. 61000001→	[o]	**PF0369**	155,2×69×20,2	OK025	ATE		[-]	**PF0431**	123,1×52×16,4	
3.0 CDTi	03→			ATE		[o]	**PF0612**	155×72,8×20,2		ATE		[-]	**PF0349**	123,1×52×16,4	
3.0 CDTi	03→									ATE		[-]	**PF0431**	123,1×52×16,4	
3.2i V6	03→			ATE		[o]	**PF0612**	155×72,8×20,2		ATE		[-]	**PF0349**	123,1×52×16,4	
3.2i V6	03→									ATE		[-]	**PF0431**	123,1×52×16,4	

		KW	CV	SiS	i	W.i.	MAGNETI MARELLI	W×H×Th (mm)	Extra kit [Opt]	SiS	i	W.i.	MAGNETI MARELLI	W×H×Th (mm)	Extra kit [Opt]
VAUXHALL															
Vectra GTS C															
1.8 16V	08/02→			ATE		[o]	**PF0162**	155,2×69×20,2	OK025	ATE		[-]	**PF0349**	123,1×52×16,4	
1.8 16V	08/02→			ATE	Tel. 61000001→	[o]	**PF0369**	155,2×69×20,2	OK025	ATE		[-]	**PF0431**	123,1×52×16,4	
1.9 CDTi	04/04→			ATE		[o]	**PF0162**	155,2×69×20,2	OK025	ATE		[-]	**PF0349**	123,1×52×16,4	
1.9 CDTi	04/04→			ATE	Tel. 61000001→	[o]	**PF0369**	155,2×69×20,2	OK025	ATE		[-]	**PF0431**	123,1×52×16,4	
2.0 16V	03/03→			ATE		[o]	**PF0162**	155,2×69×20,2	OK025	ATE		[-]	**PF0349**	123,1×52×16,4	
2.0 16V	03/03→			ATE	Tel. 61000001→	[o]	**PF0369**	155,2×69×20,2	OK025	ATE		[-]	**PF0431**	123,1×52×16,4	
2.0 dti 16V	08/02→			ATE		[o]	**PF0162**	155,2×69×20,2	OK025	ATE		[-]	**PF0349**	123,1×52×16,4	
2.0 dti 16V	08/02→			ATE	Tel. 61000001→	[o]	**PF0369**	155,2×69×20,2	OK025	ATE		[-]	**PF0431**	123,1×52×16,4	
2.2 16V	08/02→			ATE		[o]	**PF0162**	155,2×69×20,2	OK025	ATE		[-]	**PF0349**	123,1×52×16,4	
2.2 16V	08/02→			ATE	Tel. 61000001→	[o]	**PF0369**	155,2×69×20,2	OK025	ATE		[-]	**PF0431**	123,1×52×16,4	
2.2 dti 16V	08/02→			ATE		[o]	**PF0162**	155,2×69×20,2	OK025	ATE		[-]	**PF0349**	123,1×52×16,4	
2.2 dti 16V	08/02→			ATE	Tel. 61000001→	[o]	**PF0369**	155,2×69×20,2	OK025	ATE		[-]	**PF0431**	123,1×52×16,4	
3.0 CDTi	03→			ATE		[o]	**PF0612**	155×72,8×20,2		ATE		[-]	**PF0349**	123,1×52×16,4	
3.0 CDTi	03→									ATE		[-]	**PF0431**	123,1×52×16,4	
3.2i V6	03→			ATE		[o]	**PF0612**	155×72,8×20,2		ATE		[-]	**PF0349**	123,1×52×16,4	
3.2i V6	03→									ATE		[-]	**PF0431**	123,1×52×16,4	
VOLKSWAGEN															
Amarok															
2.0 BiTDI	09/10→	120	163	BSC		[-]	**PF0645**	164,9×66,8×18,7	OK072/ OK038						
2.0 BiTDI 4x4	09/10→	120	163	BSC		[-]	**PF0645**	164,9×66,8×18,7	OK072/ OK038						
2.0 TDI	09/10→	90	122	BSC		[-]	**PF0645**	164,9×66,8×18,7	OK072/ OK038						
2.0 TDI 4x4	09/10→	90	122	BSC		[-]	**PF0645**	164,9×66,8×18,7	OK072/ OK038						
2.0 TDI 4x4	06/12→	103	140	BSC		[-]	**PF0645**	164,9×66,8×18,7	OK072/ OK038						
2.0 TDI	07/12→	103	140	BSC	RWD	[-]	**PF0645**	164,9×66,8×18,7	OK072/ OK038						
2.0 TDI	11/11→	132	180	BSC		[-]	**PF0645**	164,9×66,8×18,7	OK072/ OK038						
2.0 TDI	11/11→	132	180	BSC	RWD	[-]	**PF0645**	164,9×66,8×18,7	OK072/ OK038						

		KW	CV	SiS	i	W.i.	MAGNETI MARELLI	W×H×Th (mm)	Extra kit [Opt]	SiS	i	W.i.	MAGNETI MARELLI	W×H×Th (mm)	Extra kit [Opt]
VOLKSWAGEN															
Beetle Cabriolet (Maggiolino)(5C7)															
1.2 TSI	12/12→	77	105	ATE	1ZH, 1ZQ	[+]	**PF0516**	146×54,7×19,5		LG		[-]	**PF0131**	87×53×17	OK039/ OK041
1.2 TSI	12/12→	77	105	ATE	1Z4, 1ZB, 1ZE	[+]	**PF0135**	155,1×66×20,1		BSC	1KS,1KT	[-]	**PF0441**	109,2×53,3×17,5	OK033
1.4 TSI	12/12→	118	160	ATE	1ZH, 1ZQ	[+]	**PF0516**	146×54,7×19,5		LG		[-]	**PF0131**	87×53×17	OK039/ OK041
1.4 TSI	12/12→	118	160	ATE	1Z4, 1ZB, 1ZE	[+]	**PF0135**	155,1×66×20,1		BSC	1KS,1KT	[-]	**PF0441**	109,2×53,3×17,5	OK033
1.6 TDI	12/12→	77	105	ATE	1ZH, 1ZQ	[+]	**PF0516**	146×54,7×19,5		LG		[-]	**PF0131**	87×53×17	OK039/ OK041
1.6 TDI	12/12→	77	105	ATE	1Z4, 1ZB, 1ZE	[+]	**PF0135**	155,1×66×20,1		BSC	1KS,1KT	[-]	**PF0441**	109,2×53,3×17,5	OK033
2.0 TDI	12/12→	103	140	ATE	1ZH, 1ZQ	[+]	**PF0516**	146×54,7×19,5		LG		[-]	**PF0131**	87×53×17	OK039/ OK041
2.0 TDI	12/12→	103	140	ATE	1Z4, 1ZB, 1ZE	[+]	**PF0135**	155,1×66×20,1		BSC	1KS,1KT	[-]	**PF0441**	109,2×53,3×17,5	OK033
2.0 TSI	12/12→	147	200	ATE	1ZH, 1ZQ	[+]	**PF0516**	146×54,7×19,5		LG		[-]	**PF0131**	87×53×17	OK039/ OK041
2.0 TSI	12/12→	147	200	ATE	1Z4, 1ZB, 1ZE	[+]	**PF0135**	155,1×66×20,1		BSC	1KS,1KT	[-]	**PF0441**	109,2×53,3×17,5	OK033
2.0 TSI	12/12→	155	210	ATE	1ZH, 1ZQ	[+]	**PF0516**	146×54,7×19,5		LG		[-]	**PF0131**	87×53×17	OK039/ OK041
2.0 TSI	12/12→	155	210	ATE	1Z4, 1ZB, 1ZE	[+]	**PF0135**	155,1×66×20,1		BSC	1KS,1KT	[-]	**PF0441**	109,2×53,3×17,5	OK033
Beetle (Maggiolino) (5C1)															
1.2 TSI	10/11→	77	105	ATE		[-]	**PF0134**	146×54,7×19,5		BSC	1KS/ØDisc 272×16	[-]	**PF0441**	109,2×53,3×17,5	OK033
1.2 TSI	10/11→	77	105	ATE	+w.i.	[+]	**PF0132**	146×54,7×19,5		BSC	1KS/ØDisc 272×16	[-]	**PF0441**	109,2×53,3×17,5	OK033
1.2 TSI	10/11→	77	105	ATE	+w.i.	[+]	**PF0135**	155,1×66×20,1		BSC	1KS/ØDisc 272×16	[-]	**PF0441**	109,2×53,3×17,5	OK033
1.4 TSI	10/11→			ATE		[-]	**PF0134**	146×54,7×19,5		BSC	1KS/ØDisc 272×16	[-]	**PF0441**	109,2×53,3×17,5	OK033
1.4 TSI	10/11→			ATE	+w.i.	[+]	**PF0132**	146×54,7×19,5		BSC	1KS/ØDisc 272×16	[-]	**PF0441**	109,2×53,3×17,5	OK033
1.4 TSI	10/11→			ATE	+w.i.	[+]	**PF0135**	155,1×66×20,1		BSC	1KS/ØDisc 272×16	[-]	**PF0441**	109,2×53,3×17,5	OK033
2.0 TSI	10/11→	147	200	ATE		[-]	**PF0134**	146×54,7×19,5		BSC	1KS/ØDisc 272×16	[-]	**PF0441**	109,2×53,3×17,5	OK033
2.0 TSI	10/11→	147	200	ATE	+w.i.	[+]	**PF0132**	146×54,7×19,5		BSC	1KS/ØDisc 272×16	[-]	**PF0441**	109,2×53,3×17,5	OK033
2.0 TSI	10/11→	147	200	ATE	+w.i.	[+]	**PF0135**	155,1×66×20,1		BSC	1KS/ØDisc 272×16	[-]	**PF0441**	109,2×53,3×17,5	OK033

		KW	CV												
				SiS	i	W.i.	MAGNETI MARELLI	W×H×Th (mm)	Extra kit [Opt]	SiS	i	W.i.	MAGNETI MARELLI	W×H×Th (mm)	Extra kit [Opt]
VOLKSWAGEN															
Bora Berlina															
1.6i	98→			ATE	14"	[-]	**PF0515**	146×54,7×19,5		LG		[-]	**PF0131**	87×53×17	OK039/ OK041
1.6i	99→			ATE	15"	[+]	**PF0516**	146×54,7×19,5		LG		[-]	**PF0131**	87×53×17	OK039/ OK041
1.8 T.	99→			ATE		[-]	**PF0260**	156,4×74,2×19		LG		[-]	**PF0131**	87×53×17	OK039/ OK041
1.8i T.	10/97→04/99			ATE		[-]	**PF0137**	156,4×74,2×19		LG		[-]	**PF0131**	87×53×17	OK039/ OK041
1.8i	98→			ATE	14"	[-]	**PF0515**	146×54,7×19,5		LG		[-]	**PF0131**	87×53×17	OK039/ OK041
1.8i	99→			ATE	15"	[+]	**PF0516**	146×54,7×19,5		LG		[-]	**PF0131**	87×53×17	OK039/ OK041
1.9 TD	98→			ATE	14"	[-]	**PF0515**	146×54,7×19,5		LG		[-]	**PF0131**	87×53×17	OK039/ OK041
1.9 TD	99→			ATE	15"	[+]	**PF0516**	146×54,7×19,5		LG		[-]	**PF0131**	87×53×17	OK039/ OK041
2.3i VR5	10/97→04/99			ATE		[-]	**PF0137**	156,4×74,2×19		LG		[-]	**PF0131**	87×53×17	OK039/ OK041
2.3 V5	98→			ATE	14"	[-]	**PF0515**	146×54,7×19,5		LG		[-]	**PF0131**	87×53×17	OK039/ OK041
2.3 V5	98→			ATE	15"	[+]	**PF0516**	146×54,7×19,5		LG		[-]	**PF0131**	87×53×17	OK039/ OK041
2.3 V5	98→			ATE	15"	[-]	**PF0260**	156,4×74,2×19		LG		[-]	**PF0131**	87×53×17	OK039/ OK041
2.3 V5	00→			ATE	15"	[+]	**PF0261**	156,4×74,2×19		LG		[-]	**PF0131**	87×53×17	OK039/ OK041
2.8i V6	98→			ATE		[-]	**PF0260**	156,4×74,2×19		LG		[-]	**PF0131**	87×53×17	OK039/ OK041
2.8i V6	98→			ATE		[+]	**PF0136**	156,4×74,2×19		LG		[-]	**PF0131**	87×53×17	OK039/ OK041
2.8i V6	00→			ATE		[+]	**PF0261**	156,4×74,2×19		LG		[-]	**PF0131**	87×53×17	OK039/ OK041
Bora SW (J6)															
1.4 16V	99→09/01			ATE		[-]	**PF0134**	146×54,7×19,5		LG		[-]	**PF0131**	87×53×17	OK039/ OK041
1.4 16V	09/01→			ATE		[+]	**PF0516**	146×54,7×19,5		LG		[-]	**PF0131**	87×53×17	OK039/ OK041
1.6	99→			ATE		[-]	**PF0134**	146×54,7×19,5		LG		[-]	**PF0131**	87×53×17	OK039/ OK041
1.6 16V	00→			ATE		[+]	**PF0516**	146×54,7×19,5		LG		[-]	**PF0131**	87×53×17	OK039/ OK041
1.8	99→			ATE		[-]	**PF0134**	146×54,7×19,5		LG		[-]	**PF0131**	87×53×17	OK039/ OK041

		KW	CV	SiS	i	W.i.	MAGNETI MARELLI	W×H×Th (mm)	Extra kit [Opt]	SiS	i	W.i.	MAGNETI MARELLI	W×H×Th (mm)	Extra kit [Opt]
VOLKSWAGEN															
Bora SW (J6)															
1.8 4 Motion	05/99→			ATE		[+]	**PF0516**	146×54,7×19,5		LG		[-]	**PF0131**	87×53×17	OK039/ OK041
1.8 T.	05/02→			ATE		[+]	**PF0136**	156,4×74,2×19		LG		[-]	**PF0131**	87×53×17	OK039/ OK041
1.9 TDI	99→06/01		90	ATE		[-]	**PF0134**	146×54,7×19,5		LG		[-]	**PF0131**	87×53×17	OK039/ OK041
1.9 TDI	99→06/01		110	ATE		[-]	**PF0134**	146×54,7×19,5		LG		[-]	**PF0131**	87×53×17	OK039/ OK041
1.9 TDI	99→06/01		115	ATE		[-]	**PF0134**	146×54,7×19,5		LG		[-]	**PF0131**	87×53×17	OK039/ OK041
1.9 TDI 4 Motion	00→			ATE		[+]	**PF0516**	146×54,7×19,5		LG		[-]	**PF0131**	87×53×17	OK039/ OK041
1.9 Sdi	99→			ATE		[+]	**PF0516**	146×54,7×19,5		LG		[-]	**PF0131**	87×53×17	OK039/ OK041
1.9 TDI	11/00→		130	ATE		[+]	**PF0136**	156,4×74,2×19		LG		[-]	**PF0131**	87×53×17	OK039/ OK041
1.9 TDI	10/01→		150	ATE		[+]	**PF0136**	156,4×74,2×19		LG		[-]	**PF0131**	87×53×17	OK039/ OK041
1.9 TDI 4 Motion	11/00→		130	ATE		[+]	**PF0136**	156,4×74,2×19		LG		[-]	**PF0131**	87×53×17	OK039/ OK041
1.9 TDI 4 Motion	10/01→		150	ATE		[+]	**PF0136**	156,4×74,2×19		LG		[-]	**PF0131**	87×53×17	OK039/ OK041
2.0	99→			ATE		[-]	**PF0134**	146×54,7×19,5		LG		[-]	**PF0131**	87×53×17	OK039/ OK041
2.0 4 Motion	99→			ATE		[+]	**PF0516**	146×54,7×19,5		LG		[-]	**PF0131**	87×53×17	OK039/ OK041
2.3	99→10/00		150	ATE		[+]	**PF0136**	156,4×74,2×19		LG		[-]	**PF0131**	87×53×17	OK039/ OK041
2.3	10/00→		170	ATE		[+]	**PF0136**	156,4×74,2×19		LG		[-]	**PF0131**	87×53×17	OK039/ OK041
2.3 4 Motion	99→10/00		150	ATE		[+]	**PF0136**	156,4×74,2×19		LG		[-]	**PF0131**	87×53×17	OK039/ OK041
2.3 4 Motion	10/00→		170	ATE		[+]	**PF0136**	156,4×74,2×19		LG		[-]	**PF0131**	87×53×17	OK039/ OK041
2.8 V6	05/99→			ATE		[+]	**PF0136**	156,4×74,2×19		LG		[-]	**PF0131**	87×53×17	OK039/ OK041
Caddy (14)															
1.6	01/83→07/92	55	75	KH		[-]	**PF0392**	138×49×19,5							
1.6 D	08/82→07/92	40	55	KH		[-]	**PF0392**	138×49×19,5							
1.8	08/85→07/92	70	95	KH		[-]	**PF0392**	138×49×19,5							

		KW	CV	SiS	i	W.i.	MAGNETI MARELLI	W×H×Th (mm)	Extra kit [Opt]	SiS	i	W.i.	MAGNETI MARELLI	W×H×Th (mm)	Extra kit [Opt]
VOLKSWAGEN															
Caddy Box II (9K9A)															
1.4	08/00 → 01/04	55	75	LG		[-]	**PF0389**	119×69,5×16	OK032						
1.7 SDI	07/96 → 09/00	42	57	LG		[-]	**PF0389**	119×69,5×16	OK032						
1.9 D	11/95 → 01/04	47	64	LG		[-]	**PF0389**	119×69,5×16	OK032						
1.9 SDI	11/95 → 01/04	47	64	LG		[-]	**PF0389**	119×69,5×16	OK032						
1.9 TDI	09/96 → 01/04	66	90	LG		[-]	**PF0389**	119×69,5×16	OK032						
60 1.4	11/95 → 01/04	44	60	LG		[-]	**PF0389**	119×69,5×16	OK032						
75 1.6	11/95 → 09/00	55	75	LG		[-]	**PF0389**	119×69,5×16	OK032						
75 1.6	11/95 → 05/97	55	75	LG		[-]	**PF0389**	119×69,5×16	OK032						
Caddy SW II (9K9B)															
1.4	11/95 → 01/04	44	60	LG		[-]	**PF0389**	119×69,5×16	OK032						
1.4 16V	08/00 → 01/04	55	75	LG		[-]	**PF0389**	119×69,5×16	OK032						
1.6	11/95 → 05/97	55	75	LG		[-]	**PF0389**	119×69,5×16	OK032						
1.6	06/97 → 09/00	55	75	LG		[-]	**PF0389**	119×69,5×16	OK032						
1.6	04/96 → 07/03	65	88	LG		[-]	**PF0389**	119×69,5×16	OK032						
1.7 SDI	07/96 → 09/00	42	57	LG		[-]	**PF0389**	119×69,5×16	OK032						
1.9 D	11/95 → 01/04	47	64	LG		[-]	**PF0389**	119×69,5×16	OK032						
1.9 SDI	11/95 → 01/04	47	64	LG		[-]	**PF0389**	119×69,5×16	OK032						
1.9 TDI	10/96 → 01/04	66	90	LG		[-]	**PF0389**	119×69,5×16	OK032						
Caddy Van III (2K_,2C_)															
1.2 TSI	09/10 →	63	86	ATE		[+]	**PF0132**	146×54,7×19,5		LG		[-]	**PF0131**	87×53×17	OK039/ OK041
1.2 TSI	09/10 →	77	105	ATE		[+]	**PF0135**	155,1×66×20,1		LG		[-]	**PF0133**	105,5×56×17	OK039/ OK085
1.2 TSI	09/10 →	77	105	ATE		[+]	**PF0132**	146×54,7×19,5		LG		[-]	**PF0131**	87×53×17	OK039/ OK041
1.4	03/04 →	55	75	ATE		[+]	**PF0135**	155,1×66×20,1		LG		[-]	**PF0133**	105,5×56×17	OK039/ OK085
1.4	03/04 →	55	75	ATE		[+]	**PF0132**	146×54,7×19,5		LG		[-]	**PF0131**	87×53×17	OK039/ OK041
1.4 16V	05/06 →	59	80	ATE		[+]	**PF0135**	155,1×66×20,1		LG		[-]	**PF0133**	105,5×56×17	OK039/ OK085
1.4 16V	05/06 →	59	80	ATE		[+]	**PF0132**	146×54,7×19,5		LG		[-]	**PF0131**	87×53×17	OK039/ OK041
1.6	04/04 →	75	102	ATE		[+]	**PF0135**	155,1×66×20,1		LG		[-]	**PF0133**	105,5×56×17	OK039/ OK085
1.6	04/04 →	75	102	ATE		[+]	**PF0132**	146×54,7×19,5		LG		[-]	**PF0131**	87×53×17	OK039/ OK041
1.6 BiFuel	05/11 →	75	102	ATE		[+]	**PF0135**	155,1×66×20,1		LG		[-]	**PF0133**	105,5×56×17	OK039/ OK085
1.6 BiFuel	05/11 →	75	102	ATE		[+]	**PF0132**	146×54,7×19,5		LG		[-]	**PF0131**	87×53×17	OK039/ OK041
1.6 TDI	08/10 →	55	75	ATE		[+]	**PF0135**	155,1×66×20,1		LG		[-]	**PF0133**	105,5×56×17	OK039/ OK085

		KW	CV	SiS	i	W.i.	MAGNETI MARELLI	W×H×Th (mm)	Extra kit [Opt]	SiS	i	W.i.	MAGNETI MARELLI	W×H×Th (mm)	Extra kit [Opt]
VOLKSWAGEN															
Caddy Van III (2K_,2C_)															
1.6 TDI	08/10→	55	75	ATE		[+]	**PF0132**	146×54,7×19,5		LG		[-]	**PF0131**	87×53×17	OK039/ OK041
1.6 TDI	08/10→	75	102	ATE		[+]	**PF0135**	155,1×66×20,1		LG		[-]	**PF0133**	105,5×56×17	OK039/ OK085
1.6 TDI	08/10→	75	102	ATE		[+]	**PF0132**	146×54,7×19,5		LG		[-]	**PF0131**	87×53×17	OK039/ OK041
1.9 TDI	04/04→	77	105	ATE		[+]	**PF0135**	155,1×66×20,1		LG		[-]	**PF0133**	105,5×56×17	OK039/ OK085
1.9 TDI	04/04→	77	105	ATE		[+]	**PF0132**	146×54,7×19,5		LG		[-]	**PF0131**	87×53×17	OK039/ OK041
1.9 TDI	09/05→	55	75	ATE		[+]	**PF0135**	155,1×66×20,1		LG		[-]	**PF0133**	105,5×56×17	OK039/ OK085
1.9 TDI	09/05→	55	75	ATE		[+]	**PF0132**	146×54,7×19,5		LG		[-]	**PF0131**	87×53×17	OK039/ OK041
1.9 TDI 4motion	11/08→ 08/10	77	105	ATE		[+]	**PF0135**	155,1×66×20,1		LG		[-]	**PF0133**	105,5×56×17	OK039/ OK085
1.9 TDI 4motion	11/08→ 08/10	77	105	ATE		[+]	**PF0132**	146×54,7×19,5		LG		[-]	**PF0131**	87×53×17	OK039/ OK041
2.0 EcoFuel	04/06→	80	109	ATE		[+]	**PF0135**	155,1×66×20,1		LG		[-]	**PF0133**	105,5×56×17	OK039/ OK085
2.0 EcoFuel	04/06→	80	109	ATE		[+]	**PF0132**	146×54,7×19,5		LG		[-]	**PF0131**	87×53×17	OK039/ OK041
2.0 SDI	03/04→	51	70	ATE		[+]	**PF0135**	155,1×66×20,1		LG		[-]	**PF0133**	105,5×56×17	OK039/ OK085
2.0 SDI	03/04→	51	70	ATE		[+]	**PF0132**	146×54,7×19,5		LG		[-]	**PF0131**	87×53×17	OK039/ OK041
2.0 TDI	11/10→	62	85	ATE		[+]	**PF0135**	155,1×66×20,1		LG		[-]	**PF0133**	105,5×56×17	OK039/ OK085
2.0 TDI	11/10→	62	85	ATE		[+]	**PF0132**	146×54,7×19,5		LG		[-]	**PF0131**	87×53×17	OK039/ OK041
2.0 TDI	08/10→	81	110	ATE		[+]	**PF0135**	155,1×66×20,1		LG		[-]	**PF0133**	105,5×56×17	OK039/ OK085
2.0 TDI	08/10→	81	110	ATE		[+]	**PF0132**	146×54,7×19,5		LG		[-]	**PF0131**	87×53×17	OK039/ OK041
2.0 TDI	09/07→	103	140	ATE		[+]	**PF0135**	155,1×66×20,1		LG		[-]	**PF0133**	105,5×56×17	OK039/ OK085
2.0 TDI	09/07→	103	140	ATE		[+]	**PF0132**	146×54,7×19,5		LG		[-]	**PF0131**	87×53×17	OK039/ OK041
2.0 TDI	05/12→	125	170	ATE		[+]	**PF0135**	155,1×66×20,1		LG		[-]	**PF0133**	105,5×56×17	OK039/ OK085
2.0 TDI	05/12→	125	170	ATE		[+]	**PF0132**	146×54,7×19,5		LG		[-]	**PF0131**	87×53×17	OK039/ OK041
2.0 TDI 16V	11/10→	103	140	ATE		[+]	**PF0135**	155,1×66×20,1		LG		[-]	**PF0133**	105,5×56×17	OK039/ OK085

		KW	CV	SiS	i	W.i.	MAGNETI MARELLI	W×H×Th (mm)	Extra kit [Opt]	SiS	i	W.i.	MAGNETI MARELLI	W×H×Th (mm)	Extra kit [Opt]
VOLKSWAGEN															
Caddy Van III (2K_,2C_)															
2.0 TDI 16V	11/10→	103	140	ATE		[+]	**PF0132**	146×54,7×19,5		LG		[-]	**PF0131**	87×53×17	OK039/ OK041
2.0 TDI 16V 4motion	11/10→	103	140	ATE		[+]	**PF0135**	155,1×66×20,1		LG		[-]	**PF0133**	105,5×56×17	OK039/ OK085
2.0 TDI 16V 4motion	11/10→	103	140	ATE		[+]	**PF0132**	146×54,7×19,5		LG		[-]	**PF0131**	87×53×17	OK039/ OK041
2.0 TDI 4motion	12/10→	62	85	ATE		[+]	**PF0135**	155,1×66×20,1		LG		[-]	**PF0133**	105,5×56×17	OK039/ OK085
2.0 TDI 4motion	12/10→	62	85	ATE		[+]	**PF0132**	146×54,7×19,5		LG		[-]	**PF0131**	87×53×17	OK039/ OK041
2.0 TDI 4motion	10/10→	81	110	ATE		[+]	**PF0135**	155,1×66×20,1		LG		[-]	**PF0133**	105,5×56×17	OK039/ OK085
2.0 TDI 4motion	10/10→	81	110	ATE		[+]	**PF0132**	146×54,7×19,5		LG		[-]	**PF0131**	87×53×17	OK039/ OK041
Caddy SW III (2K_)															
1.2 TSI	09/10→	63	86	ATE		[+]	**PF0135**	155,1×66×20,1		LG		[-]	**PF0133**	105,5×56×17	OK039/ OK085
1.2 TSI	09/10→	63	86	ATE		[+]	**PF0132**	146×54,7×19,5		LG		[-]	**PF0131**	87×53×17	OK039/ OK041
1.2 TSI	09/10→	77	105	ATE		[+]	**PF0135**	155,1×66×20,1		LG		[-]	**PF0133**	105,5×56×17	OK039/ OK085
1.2 TSI	09/10→	77	105	ATE		[+]	**PF0132**	146×54,7×19,5		LG		[-]	**PF0131**	87×53×17	OK039/ OK041
1.4	03/04→	55	75	ATE		[+]	**PF0135**	155,1×66×20,1		LG		[-]	**PF0133**	105,5×56×17	OK039/ OK085
1.4	03/04→	55	75	ATE		[+]	**PF0132**	146×54,7×19,5		LG		[-]	**PF0131**	87×53×17	OK039/ OK041
1.4 16V	05/06→	59	80	ATE		[+]	**PF0135**	155,1×66×20,1		LG		[-]	**PF0133**	105,5×56×17	OK039/ OK085
1.4 16V	05/06→	59	80	ATE		[+]	**PF0132**	146×54,7×19,5		LG		[-]	**PF0131**	87×53×17	OK039/ OK041
1.6	04/04→	75	102	ATE		[+]	**PF0135**	155,1×66×20,1		LG		[-]	**PF0133**	105,5×56×17	OK039/ OK085
1.6	04/04→	75	102	ATE		[+]	**PF0132**	146×54,7×19,5		LG		[-]	**PF0131**	87×53×17	OK039/ OK041
1.6	03/05→	74	101	ATE		[+]	**PF0135**	155,1×66×20,1		LG		[-]	**PF0133**	105,5×56×17	OK039/ OK085
1.6	03/05→	74	101	ATE		[+]	**PF0132**	146×54,7×19,5		LG		[-]	**PF0131**	87×53×17	OK039/ OK041
1.6 BiFuel	05/11→	75	102	ATE		[+]	**PF0135**	155,1×66×20,1		LG		[-]	**PF0133**	105,5×56×17	OK039/ OK085
1.6 BiFuel	05/11→	75	102	ATE		[+]	**PF0132**	146×54,7×19,5		LG		[-]	**PF0131**	87×53×17	OK039/ OK041

		KW	CV	SiS	i	W.i.	MAGNETI MARELLI	W×H×Th (mm)	Extra kit [Opt]	SiS	i	W.i.	MAGNETI MARELLI	W×H×Th (mm)	Extra kit [Opt]
VOLKSWAGEN															
Caddy SW III (2K_)															
1.6 TDI	08/10→	55	75	ATE		[+]	**PF0135**	155,1×66×20,1		LG		[-]	**PF0133**	105,5×56×17	OK039/ OK085
1.6 TDI	08/10→	55	75	ATE		[+]	**PF0132**	146×54,7×19,5		LG		[-]	**PF0131**	87×53×17	OK039/ OK041
1.6 TDI	08/10→	75	102	ATE		[+]	**PF0135**	155,1×66×20,1		LG		[-]	**PF0133**	105,5×56×17	OK039/ OK085
1.6 TDI	08/10→	75	102	ATE		[+]	**PF0132**	146×54,7×19,5		LG		[-]	**PF0131**	87×53×17	OK039/ OK041
1.9 TDI	04/04→	77	105	ATE		[+]	**PF0135**	155,1×66×20,1		LG		[-]	**PF0133**	105,5×56×17	OK039/ OK085
1.9 TDI	04/04→	77	105	ATE		[+]	**PF0132**	146×54,7×19,5		LG		[-]	**PF0131**	87×53×17	OK039/ OK041
1.9 TDI	09/05→	55	75	ATE		[+]	**PF0135**	155,1×66×20,1		LG		[-]	**PF0133**	105,5×56×17	OK039/ OK085
1.9 TDI	09/05→	55	75	ATE		[+]	**PF0132**	146×54,7×19,5		LG		[-]	**PF0131**	87×53×17	OK039/ OK041
1.9 TDI 4motion	05/08→	77	105	ATE		[+]	**PF0135**	155,1×66×20,1		LG		[-]	**PF0133**	105,5×56×17	OK039/ OK085
1.9 TDI 4motion	05/08→	77	105	ATE		[+]	**PF0132**	146×54,7×19,5		LG		[-]	**PF0131**	87×53×17	OK039/ OK041
2.0 EcoFuel	04/06→	80	109	ATE		[+]	**PF0135**	155,1×66×20,1		LG		[-]	**PF0133**	105,5×56×17	OK039/ OK085
2.0 EcoFuel	04/06→	80	109	ATE		[+]	**PF0132**	146×54,7×19,5		LG		[-]	**PF0131**	87×53×17	OK039/ OK041
2.0 SDI	03/04→	51	70	ATE		[+]	**PF0135**	155,1×66×20,1		LG		[-]	**PF0133**	105,5×56×17	OK039/ OK085
2.0 SDI	03/04→	51	70	ATE		[+]	**PF0132**	146×54,7×19,5		LG		[-]	**PF0131**	87×53×17	OK039/ OK041
2.0 TDI	08/10→	81	110	ATE		[+]	**PF0135**	155,1×66×20,1		LG		[-]	**PF0133**	105,5×56×17	OK039/ OK085
2.0 TDI	08/10→	81	110	ATE		[+]	**PF0132**	146×54,7×19,5		LG		[-]	**PF0131**	87×53×17	OK039/ OK041
2.0 TDI	09/07→	103	140	ATE		[+]	**PF0135**	155,1×66×20,1		LG		[-]	**PF0133**	105,5×56×17	OK039/ OK085
2.0 TDI	09/07→	103	140	ATE		[+]	**PF0132**	146×54,7×19,5		LG		[-]	**PF0131**	87×53×17	OK039/ OK041
2.0 TDI	08/10→	125	170	ATE		[+]	**PF0135**	155,1×66×20,1		LG		[-]	**PF0133**	105,5×56×17	OK039/ OK085
2.0 TDI	08/10→	125	170	ATE		[+]	**PF0132**	146×54,7×19,5		LG		[-]	**PF0131**	87×53×17	OK039/ OK041
2.0 TDI 16V	11/10→	103	140	ATE		[+]	**PF0135**	155,1×66×20,1		LG		[-]	**PF0133**	105,5×56×17	OK039/ OK085
2.0 TDI 16V	11/10→	103	140	ATE		[+]	**PF0132**	146×54,7×19,5		LG		[-]	**PF0131**	87×53×17	OK039/ OK041

		KW	CV													
				SiS	i	W.i.	MAGNETI MARELLI	W×H×Th (mm)	Extra kit [Opt]	SiS	i	W.i.	MAGNETI MARELLI	W×H×Th (mm)	Extra kit [Opt]
VOLKSWAGEN															
Caddy SW III (2K_)															
2.0 TDI 16V 4motion	11/10→	103	140	ATE		[+]	**PF0135**	155,1×66×20,1		LG		[-]	**PF0133**	105,5×56×17	OK039/ OK085
2.0 TDI 16V 4motion	11/10→	103	140	ATE		[+]	**PF0132**	146×54,7×19,5		LG		[-]	**PF0131**	87×53×17	OK039/ OK041
2.0 TDI 4motion	10/10→	81	110	ATE		[+]	**PF0135**	155,1×66×20,1		LG		[-]	**PF0133**	105,5×56×17	OK039/ OK085
2.0 TDI 4motion	10/10→	81	110	ATE		[+]	**PF0132**	146×54,7×19,5		LG		[-]	**PF0131**	87×53×17	OK039/ OK041
CC (358)															
1.4 TSI	11/11→	118	160	ATE	1ZM	[+]	**PF0135**	155,1×66×20,1		LG	1KW	[-]	**PF0658**	105,3×56,3×17	OK039
1.4 TSI	11/11→	118	160	ATE	1ZG	[+]	**PF0657**	155,2×66×20,1		LG	2EA	[-]	**PF0601**	105,5×56×16,7	OK039/ OK085
1.8 TSI	11/11→	112	152	ATE	1ZM	[+]	**PF0135**	155,1×66×20,1		LG	1KW	[-]	**PF0658**	105,3×56,3×17	OK039
1.8 TSI	11/11→	112	152	ATE	1ZG	[+]	**PF0657**	155,2×66×20,1		LG	2EA	[-]	**PF0601**	105,5×56×16,7	OK039/ OK085
1.8 TSI	02/12→	118	160	ATE	1ZM	[+]	**PF0135**	155,1×66×20,1		LG	1KW	[-]	**PF0658**	105,3×56,3×17	OK039
1.8 TSI	02/12→	118	160	ATE	1ZG	[+]	**PF0657**	155,2×66×20,1		LG	2EA	[-]	**PF0601**	105,5×56×16,7	OK039/ OK085
2.0 TDI	11/11→	100	136	ATE	1ZM	[+]	**PF0135**	155,1×66×20,1		LG	1KW	[-]	**PF0658**	105,3×56,3×17	OK039
2.0 TDI	11/11→	100	136	ATE	1ZG	[+]	**PF0657**	155,2×66×20,1		LG	2EA	[-]	**PF0601**	105,5×56×16,7	OK039/ OK085
2.0 TDI	02/12→	103	140	ATE	1ZM	[+]	**PF0135**	155,1×66×20,1		LG	1KW	[-]	**PF0658**	105,3×56,3×17	OK039
2.0 TDI	02/12→	103	140	ATE	1ZG	[+]	**PF0657**	155,2×66×20,1		LG	2EA	[-]	**PF0601**	105,5×56×16,7	OK039/ OK085
2.0 TDI 4x4	11/11→	103	140	ATE	1ZM	[+]	**PF0135**	155,1×66×20,1		LG	1KW	[-]	**PF0658**	105,3×56,3×17	OK039
2.0 TDI 4x4	11/11→	103	140	ATE	1ZG	[+]	**PF0657**	155,2×66×20,1		LG	2EA	[-]	**PF0601**	105,5×56×16,7	OK039/ OK085
2.0 TDI	02/12→	125	170	ATE	1ZM	[+]	**PF0135**	155,1×66×20,1		LG	1KW	[-]	**PF0658**	105,3×56,3×17	OK039
2.0 TDI	02/12→	125	170	ATE	1ZG	[+]	**PF0657**	155,2×66×20,1		LG	2EA	[-]	**PF0601**	105,5×56×16,7	OK039/ OK085
2.0 TDI 4x4	11/11→	125	170	ATE	1ZM	[+]	**PF0135**	155,1×66×20,1		LG	1KW	[-]	**PF0658**	105,3×56,3×17	OK039
2.0 TDI 4x4	11/11→	125	170	ATE	1ZG	[+]	**PF0657**	155,2×66×20,1		LG	2EA	[-]	**PF0601**	105,5×56×16,7	OK039/ OK085
2.0 TDI	12/12→	130	177	ATE	1ZM	[+]	**PF0135**	155,1×66×20,1		LG	1KW	[-]	**PF0658**	105,3×56,3×17	OK039
2.0 TDI	12/12→	130	177	ATE	1ZG	[+]	**PF0657**	155,2×66×20,1		LG	2EA	[-]	**PF0601**	105,5×56×16,7	OK039/ OK085
2.0 TDI 4x4	12/12→	130	177	ATE	1ZM	[+]	**PF0135**	155,1×66×20,1		LG	1KW	[-]	**PF0658**	105,3×56,3×17	OK039
2.0 TDI 4x4	12/12→	130	177	ATE	1ZG	[+]	**PF0657**	155,2×66×20,1		LG	2EA	[-]	**PF0601**	105,5×56×16,7	OK039/ OK085
2.0 TSI	11/11→	147	200	ATE	1ZM	[+]	**PF0135**	155,1×66×20,1		LG	1KW	[-]	**PF0658**	105,3×56,3×17	OK039
2.0 TSI	11/11→	147	200	ATE	1ZG	[+]	**PF0657**	155,2×66×20,1		LG	2EA	[-]	**PF0601**	105,5×56×16,7	OK039/ OK085
2.0 TSI	02/12→	155	210	ATE	1ZM	[+]	**PF0135**	155,1×66×20,1		LG	1KW	[-]	**PF0658**	105,3×56,3×17	OK039

		KW	CV													
				SiS	i	W.i.	MAGNETI MARELLI	W×H×Th (mm)	Extra kit [Opt]	SiS	i	W.i.	MAGNETI MARELLI	W×H×Th (mm)	Extra kit [Opt]
VOLKSWAGEN															
CC (358)															
2.0 TSI	02/12→	155	210	ATE	1ZG	[+]	**PF0657**	155,2×66×20,1		LG	2EA	[-]	**PF0601**	105,5×56×16,7	OK039/ OK085
3.6 FSI 4x4	11/11→	206	280	ATE	1ZM	[+]	**PF0135**	155,1×66×20,1		LG	1KW	[-]	**PF0658**	105,3×56,3×17	OK039
3.6 FSI 4x4	11/11→	206	280	ATE	1ZG	[+]	**PF0657**	155,2×66×20,1		LG	2EA	[-]	**PF0601**	105,5×56×16,7	OK039/ OK085
3.6 FSI	11/11→	206	280	ATE	1ZM	[+]	**PF0135**	155,1×66×20,1		LG	1KW	[-]	**PF0658**	105,3×56,3×17	OK039
3.6 FSI	11/11→	206	280	ATE	1ZG	[+]	**PF0657**	155,2×66×20,1		LG	2EA	[-]	**PF0601**	105,5×56×16,7	OK039/ OK085
3.6 FSI	02/12→	220	300	ATE	1ZM	[+]	**PF0135**	155,1×66×20,1		LG	1KW	[-]	**PF0658**	105,3×56,3×17	OK039
3.6 FSI	02/12→	220	300	ATE	1ZG	[+]	**PF0657**	155,2×66×20,1		LG	2EA	[-]	**PF0601**	105,5×56×16,7	OK039/ OK085
Caravelle Van															
1.6	95→			LG		[-]	**PF0415**	91,6×80×18							
1.6 D	95→			LG		[-]	**PF0415**	91,6×80×18							
Caravelle															
1.6 8V	90→95			ATE		[-]	**PF0418**	156,5×68,5×19,5							
1.8 8V	90→98			ATE		[-]	**PF0418**	156,5×68,5×19,5							
1.9 TD	90→98			ATE		[-]	**PF0418**	156,5×68,5×19,5		LG		[-]	**PF0529**	95×57×17	OK030
1.9 TD	96→			LG		[-]	**PF0417**	129,9×65,2×19	OK030	LG		[-]	**PF0529**	95×57×17	OK030
2.0 8V	90→98			ATE		[-]	**PF0418**	156,5×68,5×19,5		LG		[-]	**PF0529**	95×57×17	OK030
2.4 10V	90→98			ATE		[-]	**PF0418**	156,5×68,5×19,5		LG		[-]	**PF0529**	95×57×17	OK030
2.4 D	98→			LG	-ABS	[-]	**PF0417**	129,9×65,2×19	OK030	LG		[+]	**PF0541**	94,9×57,4×16,2	
2.4 D	98→			LG	-ABS	[-]	**PF0417**	129,9×65,2×19	OK030	LG		[-]	**PF0542**	94,9×57,4×16,2	
2.5 TD	90→98			ATE		[-]	**PF0418**	156,5×68,5×19,5		LG		[-]	**PF0529**	95×57×17	OK030
2.5 TD	96→			LG		[-]	**PF0417**	129,9×65,2×19	OK030	LG		[-]	**PF0529**	95×57×17	OK030
2.5 TD	98→			LG	-ABS	[-]	**PF0417**	129,9×65,2×19	OK030	LG		[+]	**PF0541**	94,9×57,4×16,2	
2.5 TD	98→			LG	-ABS	[-]	**PF0417**	129,9×65,2×19	OK030	LG		[-]	**PF0542**	94,9×57,4×16,2	
2.5 TD	96→			ATE		[-]	**PF0418**	156,5×68,5×19,5		LG		[+]	**PF0541**	94,9×57,4×16,2	
2.5 TD	96→			ATE		[-]	**PF0418**	156,5×68,5×19,5		LG		[-]	**PF0542**	94,9×57,4×16,2	
2.5 TD	96→			ATE		[+]	**PF0419**	156,5×68,5×19,5		LG		[+]	**PF0541**	94,9×57,4×16,2	
2.5 TD	96→			ATE		[+]	**PF0419**	156,5×68,5×19,5		LG		[-]	**PF0542**	94,9×57,4×16,2	
2.8 12V	90→98			ATE		[-]	**PF0418**	156,5×68,5×19,5		LG		[-]	**PF0529**	95×57×17	OK030
2.8	96→			ATE		[-]	**PF0418**	156,5×68,5×19,5		LG		[+]	**PF0541**	94,9×57,4×16,2	
2.8	96→			ATE		[-]	**PF0418**	156,5×68,5×19,5		LG		[-]	**PF0542**	94,9×57,4×16,2	
2.8	96→			ATE		[+]	**PF0419**	156,5×68,5×19,5		LG		[+]	**PF0541**	94,9×57,4×16,2	
2.8	96→			ATE		[+]	**PF0419**	156,5×68,5×19,5		LG		[-]	**PF0542**	94,9×57,4×16,2	
Corrado															
1.8i	87→			LG		[-]	**PF0806**	119×69,7×16	OK030	LG		[-]	**PF0144**	87×53×15	OK039
1.8i 16V	87→			LG		[-]	**PF0806**	119×69,7×16	OK030	LG		[-]	**PF0144**	87×53×15	OK039
1.8i 16V	88→									LG		[-]	**PF0144**	87×53×15	OK039
1.8i 16V G60	88→									LG		[-]	**PF0144**	87×53×15	OK039
2.0i	91→			LG		[-]	**PF0806**	119×69,7×16	OK030	LG		[-]	**PF0144**	87×53×15	OK039
2.0i 16V	88→									LG		[-]	**PF0131**	87×53×17	OK039/ OK041

		KW	CV	SiS	i	W.i.	MAGNETI MARELLI	W×H×Th (mm)	Extra kit [Opt]	SiS	i	W.i.	MAGNETI MARELLI	W×H×Th (mm)	Extra kit [Opt]
VOLKSWAGEN															
Corrado															
2.0i 16V	91→			LG		[-]	**PF0806**	119×69,7×16	OK030	LG		[-]	**PF0144**	87×53×15	OK039
2.9i VR6	88→									LG		[-]	**PF0144**	87×53×15	OK039
2.9i VR6	91→									LG		[-]	**PF0144**	87×53×15	OK039
Crafter (2E)															
30-35 Bus	04/06→			BR		[o]	**PF0298**	163,3×67,1×20,9	OK060	BR		[-]	**PF0300**	136,8×63×20	OK033/ OK038/ OK042
30-50 Bus	04/06→			BR		[o]	**PF0647**	169,3×73,5×20,6	OK060	BR		[-]	**PF0300**	136,8×63×20	OK033/ OK038/ OK042
30-35 Furgone	04/06→			BR		[o]	**PF0298**	163,3×67,1×20,9	OK060	BR		[-]	**PF0300**	136,8×63×20	OK033/ OK038/ OK042
30-50 Furgone	04/06→			BR		[o]	**PF0647**	169,3×73,5×20,6	OK060	BR		[-]	**PF0299**	165×78,1×20,5	OK072
30-35 Pianale	04/06→			BR		[o]	**PF0298**	163,3×67,1×20,9	OK060	BR		[-]	**PF0300**	136,8×63×20	OK033/ OK038/ OK042
30-50 Pianale	04/06→			BR		[o]	**PF0647**	169,3×73,5×20,6	OK060	BR		[-]	**PF0299**	165×78,1×20,5	OK072
Derby (86C,80)															
1.0	10/81→12/84	29	40	KH		[-]	**PF0395**	138×51,2×17,2							
1.0	08/81→12/84	33	45	KH		[-]	**PF0395**	138×51,2×17,2							
1.1	10/81→07/83	37	50	KH		[-]	**PF0395**	138×51,2×17,2							
1.3	08/83→12/84	40	55	KH		[-]	**PF0395**	138×51,2×17,2							
1.3	08/81→07/83	44	60	KH		[-]	**PF0395**	138×51,2×17,2							
1.3	09/82→12/84	55	75	KH		[-]	**PF0395**	138×51,2×17,2							
1.3	08/83→12/84	37	50	KH		[-]	**PF0395**	138×51,2×17,2							
Eos (1F_)															
1.4 TSI	11/07→13	90	122	ATE	(1F7, 1F8)	[+]	**PF0135**	155,1×66×20,1		LG		[-]	**PF0131**	87×53×17	OK039/ OK041
1.4 TSI	11/07→13	90	122	ATE	(1F7, 1F8)	[+]	**PF0606**	156,5×72,9×20		BSC	1KS/ØDisc 272×16	[-]	**PF0441**	109,2×53,3×17,5	OK033
1.4 TSI	05/08→13	118	160	ATE	(1F7, 1F8)	[+]	**PF0135**	155,1×66×20,1		LG		[-]	**PF0131**	87×53×17	OK039/ OK041
1.4 TSI	05/08→13	118	160	ATE	(1F7, 1F8)	[+]	**PF0606**	156,5×72,9×20		BSC	1KS/ØDisc 272×16	[-]	**PF0441**	109,2×53,3×17,5	OK033
1.6 FSI	06/06→05/08	85	115	ATE	(1F7, 1F8)	[+]	**PF0135**	155,1×66×20,1		LG		[-]	**PF0131**	87×53×17	OK039/ OK041
1.6 FSI	06/06→05/08	85	115	ATE	(1F7, 1F8)	[+]	**PF0606**	156,5×72,9×20		BSC	1KS/ØDisc 272×16	[-]	**PF0441**	109,2×53,3×17,5	OK033
2.0 FSI	03/06→05/08	110	150	ATE	(1F7, 1F8)	[+]	**PF0135**	155,1×66×20,1		LG		[-]	**PF0131**	87×53×17	OK039/ OK041
2.0 FSI	03/06→05/08	110	150	ATE	(1F7, 1F8)	[+]	**PF0606**	156,5×72,9×20		BSC	1KS/ØDisc 272×16	[-]	**PF0441**	109,2×53,3×17,5	OK033

		KW	CV													
				SiS	i	W.i.	MAGNETI MARELLI	W×H×Th (mm)	Extra kit [Opt]	SiS	i	W.i.	MAGNETI MARELLI	W×H×Th (mm)	Extra kit [Opt]
VOLKSWAGEN															
Eos (1F_)															
2.0 TDI	05/08 → 13	100	136	ATE	(1F7, 1F8)	[+]	**PF0135**	155,1×66×20,1		LG		[-]	**PF0131**	87×53×17	OK039/ OK041
2.0 TDI	05/08 → 13	100	136	ATE	(1F7, 1F8)	[+]	**PF0606**	156,5×72,9×20		BSC	1KS/ØDisc 272×16	[-]	**PF0441**	109,2×53,3×17,5	OK033
2.0 TDI	06/06 → 05/08	103	140	ATE	(1F7, 1F8)	[+]	**PF0135**	155,1×66×20,1		LG		[-]	**PF0131**	87×53×17	OK039/ OK041
2.0 TDI	06/06 → 05/08	103	140	ATE	(1F7, 1F8)	[+]	**PF0606**	156,5×72,9×20		BSC	1KS/ØDisc 272×16	[-]	**PF0441**	109,2×53,3×17,5	OK033
2.0 TDI 16V	05/08 → 13	103	140	ATE	(1F7, 1F8)	[+]	**PF0135**	155,1×66×20,1		LG		[-]	**PF0131**	87×53×17	OK039/ OK041
2.0 TDI 16V	05/08 → 13	103	140	ATE	(1F7, 1F8)	[+]	**PF0606**	156,5×72,9×20		BSC	1KS/ØDisc 272×16	[-]	**PF0441**	109,2×53,3×17,5	OK033
2.0 TFSI	03/06 → 13	147	200	ATE	(1F7, 1F8)	[+]	**PF0135**	155,1×66×20,1		LG		[-]	**PF0131**	87×53×17	OK039/ OK041
2.0 TFSI	03/06 → 13	147	200	ATE	(1F7, 1F8)	[+]	**PF0606**	156,5×72,9×20		BSC	1KS/ØDisc 272×16	[-]	**PF0441**	109,2×53,3×17,5	OK033
2.0 TSI	11/09 → 13	155	210	ATE	(1F7, 1F8)	[+]	**PF0135**	155,1×66×20,1		LG		[-]	**PF0131**	87×53×17	OK039/ OK041
2.0 TSI	11/09 → 13	155	210	ATE	(1F7, 1F8)	[+]	**PF0606**	156,5×72,9×20		BSC	1KS/ØDisc 272×16	[-]	**PF0441**	109,2×53,3×17,5	OK033
3.2 V6	06/06 → 13	184	250	ATE	(1F7, 1F8)	[+]	**PF0135**	155,1×66×20,1		LG		[-]	**PF0131**	87×53×17	OK039/ OK041
3.2 V6	06/06 → 13	184	250	ATE	(1F7, 1F8)	[+]	**PF0606**	156,5×72,9×20		BSC	1KS/ØDisc 272×16	[-]	**PF0441**	109,2×53,3×17,5	OK033
3.6 V6	05/09 → 13	191	260	ATE	(1F7, 1F8)	[+]	**PF0135**	155,1×66×20,1		LG		[-]	**PF0131**	87×53×17	OK039/ OK041
3.6 V6	05/09 → 13	191	260	ATE	(1F7, 1F8)	[+]	**PF0606**	156,5×72,9×20		BSC	1KS/ØDisc 272×16	[-]	**PF0441**	109,2×53,3×17,5	OK033
Eurovan T4															
2.4 D	01/93 → 12/96			ATE	15"	[-]	**PF0418**	156,5×68,5×19,5		LG		[-]	**PF0529**	95×57×17	OK030
2.5	01/92 → 12/95			ATE	15"	[-]	**PF0418**	156,5×68,5×19,5		LG		[-]	**PF0529**	95×57×17	OK030
2.5 10V	01/96 → 12/96			ATE	15"	[-]	**PF0418**	156,5×68,5×19,5		LG		[-]	**PF0529**	95×57×17	OK030
Eurovan Bus T4															
2.4 D	01/93 → 12/93	130	177	ATE	15"	[-]	**PF0418**	156,5×68,5×19,5		LG		[-]	**PF0529**	95×57×17	OK030
2.5 10V	01/93 → 12/93	80	108	ATE	15"	[-]	**PF0418**	156,5×68,5×19,5		LG		[-]	**PF0529**	95×57×17	OK030
2.8 12V	01/99 → 12/03	104	141	ATE	15"	[-]	**PF0418**	156,5×68,5×19,5		LG		[-]	**PF0529**	95×57×17	OK030
Eurovan Van Camper T4															
2.4 D	01/95 → 12/95	130	177	ATE	15"	[-]	**PF0418**	156,5×68,5×19,5		LG		[-]	**PF0529**	95×57×17	OK030
2.4 D	01/97 → 12/97	130	177	ATE	15"	[-]	**PF0418**	156,5×68,5×19,5		LG		[-]	**PF0529**	95×57×17	OK030
2.5	01/95 → 12/95	81	110	ATE	15"	[-]	**PF0418**	156,5×68,5×19,5		LG		[-]	**PF0529**	95×57×17	OK030
2.5 10V	01/95 → 12/95	80	108	ATE	15"	[-]	**PF0418**	156,5×68,5×19,5		LG		[-]	**PF0529**	95×57×17	OK030
2.8 12V	01/97 → 12/97	104	141	ATE	15"	[-]	**PF0418**	156,5×68,5×19,5		LG		[-]	**PF0529**	95×57×17	OK030
2.8 12V	01/97 → 12/03	104	141	ATE	15"	[-]	**PF0418**	156,5×68,5×19,5		LG		[-]	**PF0529**	95×57×17	OK030

		KW	CV	SiS	i	W.i.	MAGNETI MARELLI	W×H×Th (mm)	Extra kit [Opt]	SiS	i	W.i.	MAGNETI MARELLI	W×H×Th (mm)	Extra kit [Opt]
VOLKSWAGEN															
Fox (5Z1, 5Z3)															
1.0	10/03 →	52	71	ATE		[-]	**PF0388**	137,8×49×17							
1.0	10/03 →	52	71	ATE	14"	[-]	**PF0134**	146×54,7×19,5							
1.0	10/03 →	53	72	ATE		[-]	**PF0388**	137,8×49×17							
1.0	10/03 →	53	72	ATE	14"	[-]	**PF0134**	146×54,7×19,5							
1.0	04/08 →	54	73	ATE		[-]	**PF0388**	137,8×49×17							
1.0	04/08 →	54	73	ATE	14"	[-]	**PF0134**	146×54,7×19,5							
1.0 Alcohol	10/03 →	53	72	ATE		[-]	**PF0388**	137,8×49×17							
1.0 Alcohol	10/03 →	53	72	ATE	14"	[-]	**PF0134**	146×54,7×19,5							
1.0 Total Flex	03/08 →	54	73	ATE		[-]	**PF0388**	137,8×49×17							
1.0 Total Flex	03/08 →	54	73	ATE	14"	[-]	**PF0134**	146×54,7×19,5							
1.0 Total Flex	04/13 →	60	82	ATE		[-]	**PF0388**	137,8×49×17							
1.0 Total Flex	04/13 →	60	82	ATE	14"	[-]	**PF0134**	146×54,7×19,5							
1.2	04/05 →	40	55	ATE		[-]	**PF0388**	137,8×49×17							
1.2	04/05 →	40	55	ATE	14"	[-]	**PF0134**	146×54,7×19,5							
1.2	09/10 →	44	60	ATE		[-]	**PF0388**	137,8×49×17							
1.2	09/10 →	44	60	ATE	14"	[-]	**PF0134**	146×54,7×19,5							
1.4	04/05 →	55	75	ATE		[-]	**PF0388**	137,8×49×17							
1.4	04/05 →	55	75	ATE	14"	[-]	**PF0134**	146×54,7×19,5							
1.4 TDI	04/05 →	51	70	ATE		[-]	**PF0388**	137,8×49×17							
1.4 TDI	04/05 →	51	70	ATE	14"	[-]	**PF0134**	146×54,7×19,5							
1.6	01/05 →	73	99	ATE		[-]	**PF0388**	137,8×49×17							
1.6	01/05 →	73	99	ATE	14"	[-]	**PF0134**	146×54,7×19,5							
1.6	10/03 →	74	101	ATE		[-]	**PF0388**	137,8×49×17							
1.6	10/03 →	74	101	ATE	14"	[-]	**PF0134**	146×54,7×19,5							
1.6	10/05 →	74	101	ATE		[-]	**PF0388**	137,8×49×17							
1.6	10/05 →	74	101	ATE	14"	[-]	**PF0134**	146×54,7×19,5							
1.6 Alcohol	10/03 →	76	103	ATE		[-]	**PF0388**	137,8×49×17							
1.6 Alcohol	10/03 →	76	103	ATE	14"	[-]	**PF0134**	146×54,7×19,5							
1.6 Total Flex	10/03 →	74	101	ATE		[-]	**PF0388**	137,8×49×17							
1.6 Total Flex	10/03 →	74	101	ATE	14"	[-]	**PF0134**	146×54,7×19,5							
1.9 D	12/07 →	47	64	ATE		[-]	**PF0388**	137,8×49×17							
1.9 D	12/07 →	47	64	ATE	14"	[-]	**PF0134**	146×54,7×19,5							
Golf II															
1.1	83 → 91			KH		[-]	**PF0395**	138×51,2×17,2							
1.3	83 → 91			KH		[-]	**PF0395**	138×51,2×17,2							
1.6	83 → 91			KH		[-]	**PF0392**	138×49×19,5							
1.6 TD	83 → 91			KH		[-]	**PF0392**	138×49×19,5							
1.6 GTD	83 → 91			KH		[-]	**PF0392**	138×49×19,5							
1.6 D	83 → 91			KH		[-]	**PF0395**	138×51,2×17,2							
1.8	83 → 91			KH		[-]	**PF0394**	138×49×15		LG		[-]	**PF0144**	87×53×15	OK039
1.8i GTI	83 → 91			KH		[-]	**PF0394**	138×49×15		LG		[-]	**PF0144**	87×53×15	OK039
1.8i GTI G60	83 → 91			KH		[-]	**PF0394**	138×49×15		LG		[-]	**PF0144**	87×53×15	OK039
1.8i 16V GTI	83 → 91			LG		[-]	**PF0806**	119×69,7×16	OK030	LG		[-]	**PF0144**	87×53×15	OK039
1.8i 16V GTI	88 → 90									LG		[-]	**PF0144**	87×53×15	OK039

		KW	CV												
				SiS	i	W.i.	MAGNETI MARELLI	W×H×Th (mm)	Extra kit [Opt]	SiS	i	W.i.	MAGNETI MARELLI	W×H×Th (mm)	Extra kit [Opt]
VOLKSWAGEN															
Golf II															
1.8i Syncro	83→91			KH		[-]	**PF0392**	138×49×19,5		LG		[-]	**PF0144**	87×53×15	OK039
1.8i Syncro G60	83→91									LG		[-]	**PF0144**	87×53×15	OK039
G60	88→91									LG		[-]	**PF0144**	87×53×15	OK039
Golf II Cabrio															
1.3	83→91			KH	+AUT	[-]	**PF0392**	138×49×19,5							
1.8	83→91			KH		[-]	**PF0394**	138×49×15		LG		[-]	**PF0144**	87×53×15	OK039
Golf III (1H)															
1.4i	91→			KH		[-]	**PF0392**	138×49×19,5							
1.4i	95→			ATE		[-]	**PF0390**	137,8×49×19,5							
1.4i	95→98			LG		[-]	**PF0389**	119×69,5×16	OK032	LG		[-]	**PF0144**	87×53×15	OK039
1.6i	91→			KH		[-]	**PF0392**	138×49×19,5							
1.6 Movie	95→			ATE		[-]	**PF0390**	137,8×49×19,5							
1.6	95→			ATE		[-]	**PF0390**	137,8×49×19,5							
1.6i - GT	95→98			LG		[-]	**PF0389**	119×69,5×16	OK032	LG		[-]	**PF0144**	87×53×15	OK039
1.8i - Syncro - Variant	91→			KH		[-]	**PF0392**	138×49×19,5							
1.8i GT - GT Variant	91→			LG		[-]	**PF0806**	119×69,7×16	OK030	LG		[-]	**PF0144**	87×53×15	OK039
1.8i	95→98			LG		[-]	**PF0145**	119×69,5×19,4	OK032	LG		[-]	**PF0144**	87×53×15	OK039
1.8i GT - GT Variant	95→98			LG		[-]	**PF0389**	119×69,5×16	OK032	LG		[-]	**PF0144**	87×53×15	OK039
1.9 D - TD - GTD	91→			KH		[-]	**PF0392**	138×49×19,5							
1.9 TD All Types	95→			ATE		[-]	**PF0390**	137,8×49×19,5							
1.9 TD - GTD - TDI	95→98			LG		[-]	**PF0389**	119×69,5×16	OK032						
1.9 TDI Variant	95→98			LG		[-]	**PF0389**	119×69,5×16	OK032						
2.0	95→			LG		[-]	**PF0806**	119×69,7×16	OK030	LG		[-]	**PF0144**	87×53×15	OK039
2.0i 16V GTI	92→									LG		[-]	**PF0144**	87×53×15	OK039
2.0i Gti 16V	96→98		150	ATE		[-]	**PF0137**	156,4×74,2×19		LG		[-]	**PF0131**	87×53×17	OK039/ OK041
2.0i GTI	91→			LG		[-]	**PF0806**	119×69,7×16	OK030	LG		[-]	**PF0144**	87×53×15	OK039
2.0i GTI Variant	91→			LG		[-]	**PF0806**	119×69,7×16	OK030	LG		[-]	**PF0144**	87×53×15	OK039
2.8i VR6	91→92									LG		[-]	**PF0144**	87×53×15	OK039
2.8i VR6	92→95									LG		[-]	**PF0144**	87×53×15	OK039
2.8i VR6	95→			ATE		[-]	**PF0260**	156,4×74,2×19		LG		[-]	**PF0144**	87×53×15	OK039
2.8i VR6	96→98		175	ATE		[-]	**PF0137**	156,4×74,2×19		LG		[-]	**PF0131**	87×53×17	OK039/ OK041
2.9i VR6 Syncro	94→			ATE		[-]	**PF0260**	156,4×74,2×19		LG		[-]	**PF0144**	87×53×15	OK039

		KW	CV	SiS	i	W.i.	MAGNETI MARELLI	W×H×Th (mm)	Extra kit [Opt]	SiS	i	W.i.	MAGNETI MARELLI	W×H×Th (mm)	Extra kit [Opt]
VOLKSWAGEN															
Golf III Cabrio (1H)															
1.8i	93→									LG		[-]	**PF0144**	87×53×15	OK039
1.8i	95→98			LG		[-]	**PF0145**	119×69,5×19,4	OK032	LG		[-]	**PF0144**	87×53×15	OK039
1.8i Movie	95→			ATE		[-]	**PF0390**	137,8×49×19,5		LG		[-]	**PF0144**	87×53×15	OK039
2.0i	91→			LG		[-]	**PF0806**	119×69,7×16	OK030	LG		[-]	**PF0144**	87×53×15	OK039
Golf IV (1J1)															
1.4i	97→04			ATE		[-]	**PF0515**	146×54,7×19,5		LG		[-]	**PF0144**	87×53×15	OK039
1.4i	99→04			ATE		[+]	**PF0516**	146×54,7×19,5		LG		[-]	**PF0144**	87×53×15	OK039
1.6 Total Flex	04/07→04/08	74	101	ATE		[-]	**PF0515**	146×54,7×19,5		LG		[-]	**PF0144**	87×53×15	OK039
1.6 Total Flex	04/07→04/08	74	101	ATE		[+]	**PF0132**	146×54,7×19,5		LG		[-]	**PF0144**	87×53×15	OK039
1.6i 16V	97→04			ATE		[-]	**PF0515**	146×54,7×19,5		LG		[-]	**PF0144**	87×53×15	OK039
1.6i	99→04			ATE		[+]	**PF0516**	146×54,7×19,5		LG		[-]	**PF0144**	87×53×15	OK039
1.8i 20V	97→04			ATE		[-]	**PF0515**	146×54,7×19,5		LG		[-]	**PF0144**	87×53×15	OK039
1.8i 20V	99→04			ATE		[+]	**PF0516**	146×54,7×19,5		LG		[-]	**PF0144**	87×53×15	OK039
1.8i T.	10/97→04/99			ATE		[-]	**PF0137**	156,4×74,2×19		LG		[-]	**PF0131**	87×53×17	OK039/ OK041
1.8i 20V T.	99→04	110		ATE		[-]	**PF0260**	156,4×74,2×19		LG		[-]	**PF0144**	87×53×15	OK039
1.8i 20V T.	99→04	110		ATE		[+]	**PF0261**	156,4×74,2×19		LG		[-]	**PF0144**	87×53×15	OK039
1.8i 20V T.	00→04	110		ATE		[+]	**PF0136**	156,4×74,2×19		LG		[-]	**PF0144**	87×53×15	OK039
1.9 TDI	97→04			ATE		[-]	**PF0515**	146×54,7×19,5		LG		[-]	**PF0144**	87×53×15	OK039
1.9 TDI	99→04			ATE		[+]	**PF0516**	146×54,7×19,5		LG		[-]	**PF0144**	87×53×15	OK039
1.9 Sdi	99→04	47		ATE		[-]	**PF0515**	146×54,7×19,5		LG		[-]	**PF0144**	87×53×15	OK039
2.0i	99→04	84		ATE		[-]	**PF0515**	146×54,7×19,5		LG		[-]	**PF0144**	87×53×15	OK039
2.0i	99→04	84		ATE		[+]	**PF0516**	146×54,7×19,5		LG		[-]	**PF0144**	87×53×15	OK039
2.3i V5	97→04			ATE		[-]	**PF0260**	156,4×74,2×19		LG		[-]	**PF0144**	87×53×15	OK039
2.3i V5	99→00			ATE		[+]	**PF0261**	156,4×74,2×19		LG		[-]	**PF0144**	87×53×15	OK039
2.3i V5	00→04			ATE		[+]	**PF0136**	156,4×74,2×19		LG		[-]	**PF0144**	87×53×15	OK039
2.3i VR5	10/97→04/99			ATE		[-]	**PF0137**	156,4×74,2×19		LG		[-]	**PF0131**	87×53×17	OK039/ OK041
2.8i V6	99→04			ATE		[-]	**PF0260**	156,4×74,2×19		LG		[-]	**PF0144**	87×53×15	OK039
2.8i V6	99→00			ATE		[+]	**PF0261**	156,4×74,2×19		LG		[-]	**PF0144**	87×53×15	OK039
2.8i V6	00→04			ATE		[+]	**PF0136**	156,4×74,2×19		LG		[-]	**PF0144**	87×53×15	OK039
Golf IV Cabriolet (1E7)															
1.6	06/98→06/02	74	100	LG		[-]	**PF0389**	119×69,5×16	OK032						
1.8	06/98→06/02	55	75	LG		[-]	**PF0389**	119×69,5×16	OK032						
1.8	06/98→06/02	66	90	LG		[-]	**PF0389**	119×69,5×16	OK032						
1.9 TDI	06/98→06/02	66	90	LG		[-]	**PF0389**	119×69,5×16	OK032						
1.9 TDI	06/98→06/02	81	110	LG		[-]	**PF0389**	119×69,5×16	OK032						
2.0	06/98→06/02	85	115	LG		[-]	**PF0389**	119×69,5×16	OK032						
Golf V															
1.4i 16V	11/03→08			ATE		[+]	**PF0135**	155,1×66×20,1		LG		[-]	**PF0444**	87×53×17	OK039
1.4i 16V	11/03→08			ATE		[+]	**PF0132**	146×54,7×19,5		LG		[-]	**PF0444**	87×53×17	OK039
1.6i	11/03→08			ATE		[+]	**PF0135**	155,1×66×20,1		LG		[-]	**PF0444**	87×53×17	OK039
1.6i 16V	11/03→08			ATE		[+]	**PF0132**	146×54,7×19,5		LG		[-]	**PF0444**	87×53×17	OK039
1.9 TDI	11/03→08			ATE		[+]	**PF0135**	155,1×66×20,1		LG		[-]	**PF0444**	87×53×17	OK039

		KW	CV	SiS	i	W.i.	MAGNETI MARELLI	W×H×Th (mm)	Extra kit [Opt]	SiS	i	W.i.	MAGNETI MARELLI	W×H×Th (mm)	Extra kit [Opt]
VOLKSWAGEN															
Golf V															
1.9 TDI	11/03 → 08			ATE		[+]	**PF0132**	146×54,7×19,5		LG		[-]	**PF0444**	87×53×17	OK039
1.9 TDI 4x4	08/04 → 08			ATE		[+]	**PF0135**	155,1×66×20,1		LG		[-]	**PF0444**	87×53×17	OK039
2.0	11/03 → 08			ATE		[+]	**PF0135**	155,1×66×20,1		LG		[-]	**PF0444**	87×53×17	OK039
2.0 4x4	08/04 → 08			ATE		[+]	**PF0135**	155,1×66×20,1		LG		[-]	**PF0444**	87×53×17	OK039
2.0 TDI	11/03 → 08			ATE		[+]	**PF0135**	155,1×66×20,1		LG		[-]	**PF0444**	87×53×17	OK039
2.0 TDI 4x4	08/04 → 08			ATE		[+]	**PF0135**	155,1×66×20,1		LG		[-]	**PF0444**	87×53×17	OK039
2.0 GTD	11/05 → 08			ATE		[+]	**PF0135**	155,1×66×20,1		LG		[-]	**PF0444**	87×53×17	OK039
3.2 R32 4x4	11/05 → 08			ATE		[+]	**PF0135**	155,1×66×20,1		LG		[-]	**PF0601**	105,5×56×16,7	OK039/ OK085
Golf Variant V (1K5)															
1.4	06/07 →	59	80	ATE		[+]	**PF0135**	155,1×66×20,1		LG		[-]	**PF0131**	87×53×17	OK039/ OK041
1.4	06/07 →	59	80	ATE		[+]	**PF0132**	146×54,7×19,5		LG		[-]	**PF0601**	105,5×56×16,7	OK039/ OK085
1.4 TSI	06/07 →	103	140	ATE		[+]	**PF0135**	155,1×66×20,1		LG		[-]	**PF0131**	87×53×17	OK039/ OK041
1.4 TSI	06/07 →	103	140	ATE		[+]	**PF0132**	146×54,7×19,5		LG		[-]	**PF0601**	105,5×56×16,7	OK039/ OK085
1.4 TSI	06/07 →	90	122	ATE		[+]	**PF0135**	155,1×66×20,1		LG		[-]	**PF0131**	87×53×17	OK039/ OK041
1.4 TSI	06/07 →	90	122	ATE		[+]	**PF0132**	146×54,7×19,5		LG		[-]	**PF0601**	105,5×56×16,7	OK039/ OK085
1.4 TSI	06/07 →	125	170	ATE		[+]	**PF0135**	155,1×66×20,1		LG		[-]	**PF0131**	87×53×17	OK039/ OK041
1.4 TSI	06/07 →	125	170	ATE		[+]	**PF0132**	146×54,7×19,5		LG		[-]	**PF0601**	105,5×56×16,7	OK039/ OK085
1.4 TSI	07/08 →	118	160	ATE		[+]	**PF0135**	155,1×66×20,1		LG		[-]	**PF0131**	87×53×17	OK039/ OK041
1.4 TSI	07/08 →	118	160	ATE		[+]	**PF0132**	146×54,7×19,5		LG		[-]	**PF0601**	105,5×56×16,7	OK039/ OK085
1.6	06/07 →	75	102	ATE		[+]	**PF0135**	155,1×66×20,1		LG		[-]	**PF0131**	87×53×17	OK039/ OK041
1.6	06/07 →	75	102	ATE		[+]	**PF0132**	146×54,7×19,5		LG		[-]	**PF0601**	105,5×56×16,7	OK039/ OK085
1.6 MultiFuel	11/07 →	75	102	ATE		[+]	**PF0135**	155,1×66×20,1		LG		[-]	**PF0131**	87×53×17	OK039/ OK041
1.6 MultiFuel	11/07 →	75	102	ATE		[+]	**PF0132**	146×54,7×19,5		LG		[-]	**PF0601**	105,5×56×16,7	OK039/ OK085
1.9 TDI	06/07 →	77	105	ATE		[+]	**PF0135**	155,1×66×20,1		LG		[-]	**PF0131**	87×53×17	OK039/ OK041
1.9 TDI	06/07 →	77	105	ATE		[+]	**PF0132**	146×54,7×19,5		LG		[-]	**PF0601**	105,5×56×16,7	OK039/ OK085
1.9 TDI 4motion	01/08 →	77	105	ATE		[+]	**PF0135**	155,1×66×20,1		LG		[-]	**PF0131**	87×53×17	OK039/ OK041

		KW	CV	SiS	i	W.i.	MAGNETI MARELLI	W×H×Th (mm)	Extra kit [Opt]	SiS	i	W.i.	MAGNETI MARELLI	W×H×Th (mm)	Extra kit [Opt]
VOLKSWAGEN															
Golf Variant V (1K5)															
1.9 TDI 4motion	01/08→	77	105	ATE		[+]	**PF0132**	146×54,7×19,5		LG		[-]	**PF0601**	105,5×56×16,7	OK039/ OK085
2.0	06/07→	147	200	ATE		[+]	**PF0135**	155,1×66×20,1		LG		[-]	**PF0131**	87×53×17	OK039/ OK041
2.0	06/07→	147	200	ATE		[+]	**PF0132**	146×54,7×19,5		LG		[-]	**PF0601**	105,5×56×16,7	OK039/ OK085
2.0 TDI	06/07→	103	140	ATE		[+]	**PF0135**	155,1×66×20,1		LG		[-]	**PF0131**	87×53×17	OK039/ OK041
2.0 TDI	06/07→	103	140	ATE		[+]	**PF0132**	146×54,7×19,5		LG		[-]	**PF0601**	105,5×56×16,7	OK039/ OK085
2.0 TDI	06/07→	100	136	ATE		[+]	**PF0135**	155,1×66×20,1		LG		[-]	**PF0131**	87×53×17	OK039/ OK041
2.0 TDI	06/07→	100	136	ATE		[+]	**PF0132**	146×54,7×19,5		LG		[-]	**PF0601**	105,5×56×16,7	OK039/ OK085
2.0 TDI 16V	06/07→	103	140	ATE		[+]	**PF0135**	155,1×66×20,1		LG		[-]	**PF0131**	87×53×17	OK039/ OK041
2.0 TDI 16V	06/07→	103	140	ATE		[+]	**PF0132**	146×54,7×19,5		LG		[-]	**PF0601**	105,5×56×16,7	OK039/ OK085
2.0 TDI 4motion	06/07→	100	136	ATE		[+]	**PF0135**	155,1×66×20,1		LG		[-]	**PF0131**	87×53×17	OK039/ OK041
2.0 TDI 4motion	06/07→	100	136	ATE		[+]	**PF0132**	146×54,7×19,5		LG		[-]	**PF0601**	105,5×56×16,7	OK039/ OK085
Golf V Plus															
1.4 16V	03/05→			ATE	Ø Disc 288×25	[+]	**PF0135**	155,1×66×20,1		LG		[-]	**PF0131**	87×53×17	OK039/ OK041
1.4 16V	03/05→			ATE	Ø Disc 280×22	[+]	**PF0132**	146×54,7×19,5		LG		[-]	**PF0131**	87×53×17	OK039/ OK041
1.6 16V	03/05→			ATE	Ø Disc 280×22	[+]	**PF0132**	146×54,7×19,5		LG		[-]	**PF0133**	105,5×56×17	OK039/ OK085
1.6 16V	03/05→			ATE	Ø Disc 288×25	[+]	**PF0135**	155,1×66×20,1		LG		[-]	**PF0133**	105,5×56×17	OK039/ OK085
1.9 TDI	03/05→			ATE	Ø Disc 280×22	[+]	**PF0132**	146×54,7×19,5		LG		[-]	**PF0133**	105,5×56×17	OK039/ OK085
1.9 TDI	03/05→			ATE	Ø Disc 288×25	[+]	**PF0135**	155,1×66×20,1		LG		[-]	**PF0133**	105,5×56×17	OK039/ OK085
2.0 16V	03/05→			ATE	Ø Disc 280×22	[+]	**PF0132**	146×54,7×19,5		LG		[-]	**PF0133**	105,5×56×17	OK039/ OK085
2.0 16V	03/05→			ATE	Ø Disc 288×25	[+]	**PF0135**	155,1×66×20,1		LG		[-]	**PF0133**	105,5×56×17	OK039/ OK085
Golf VI (5K1)															
1.2 TSI	05/10→	63	86	ATE		[+]	**PF0132**	146×54,7×19,5		LG		[-]	**PF0131**	87×53×17	OK039/ OK041
1.2 TSI	05/10→	63	86	ATE		[+]	**PF0135**	155,1×66×20,1		BSC	1KS/ØDisc 272×16	[-]	**PF0441**	109,2×53,3×17,5	OK033

		KW	CV	SiS	i	W.i.	MAGNETI MARELLI	W×H×Th (mm)	Extra kit [Opt]	SiS	i	W.i.	MAGNETI MARELLI	W×H×Th (mm)	Extra kit [Opt]
VOLKSWAGEN															
Golf VI (5K1)															
1.2 TSI	05/09→	77	105	ATE		[+]	**PF0132**	146×54,7×19,5		LG		[-]	**PF0131**	87×53×17	OK039/ OK041
1.2 TSI	05/09→	77	105	ATE		[+]	**PF0135**	155,1×66×20,1		BSC	1KS/ØDisc 272×16	[-]	**PF0441**	109,2×53,3×17,5	OK033
1.4	10/08→	59	80	ATE		[+]	**PF0132**	146×54,7×19,5		LG		[-]	**PF0131**	87×53×17	OK039/ OK041
1.4	10/08→	59	80	ATE		[+]	**PF0135**	155,1×66×20,1		BSC	1KS/ØDisc 272×16	[-]	**PF0441**	109,2×53,3×17,5	OK033
1.4 TSI	10/08→	90	122	ATE		[+]	**PF0132**	146×54,7×19,5		LG		[-]	**PF0131**	87×53×17	OK039/ OK041
1.4 TSI	10/08→	90	122	ATE		[+]	**PF0135**	155,1×66×20,1		BSC	1KS/ØDisc 272×16	[-]	**PF0441**	109,2×53,3×17,5	OK033
1.4 TSI	10/08→	118	160	ATE		[+]	**PF0132**	146×54,7×19,5		LG		[-]	**PF0131**	87×53×17	OK039/ OK041
1.4 TSI	10/08→	118	160	ATE		[+]	**PF0135**	155,1×66×20,1		BSC	1KS/ØDisc 272×16	[-]	**PF0441**	109,2×53,3×17,5	OK033
1.6	10/08→	75	102	ATE		[+]	**PF0132**	146×54,7×19,5		LG		[-]	**PF0131**	87×53×17	OK039/ OK041
1.6	10/08→	75	102	ATE		[+]	**PF0135**	155,1×66×20,1		BSC	1KS/ØDisc 272×16	[-]	**PF0441**	109,2×53,3×17,5	OK033
1.6 BiFuel	03/09→	75	102	ATE		[+]	**PF0132**	146×54,7×19,5		LG		[-]	**PF0131**	87×53×17	OK039/ OK041
1.6 BiFuel	03/09→	75	102	ATE		[+]	**PF0135**	155,1×66×20,1		BSC	1KS/ØDisc 272×16	[-]	**PF0441**	109,2×53,3×17,5	OK033
1.6 MultiFuel	10/08→	75	102	ATE		[+]	**PF0132**	146×54,7×19,5		LG		[-]	**PF0131**	87×53×17	OK039/ OK041
1.6 MultiFuel	10/08→	75	102	ATE		[+]	**PF0135**	155,1×66×20,1		BSC	1KS/ØDisc 272×16	[-]	**PF0441**	109,2×53,3×17,5	OK033
1.6 TDI	02/09→	77	105	ATE		[+]	**PF0132**	146×54,7×19,5		LG		[-]	**PF0131**	87×53×17	OK039/ OK041
1.6 TDI	02/09→	77	105	ATE		[+]	**PF0135**	155,1×66×20,1		BSC	1KS/ØDisc 272×16	[-]	**PF0441**	109,2×53,3×17,5	OK033
1.6 TDI	02/09→	66	90	ATE		[+]	**PF0132**	146×54,7×19,5		LG		[-]	**PF0131**	87×53×17	OK039/ OK041
1.6 TDI	02/09→	66	90	ATE		[+]	**PF0135**	155,1×66×20,1		BSC	1KS/ØDisc 272×16	[-]	**PF0441**	109,2×53,3×17,5	OK033
1.8 TSI	06/09→	118	160	ATE		[+]	**PF0132**	146×54,7×19,5		LG		[-]	**PF0131**	87×53×17	OK039/ OK041
1.8 TSI	06/09→	118	160	ATE		[+]	**PF0135**	155,1×66×20,1		BSC	1KS/ØDisc 272×16	[-]	**PF0441**	109,2×53,3×17,5	OK033
2.0	06/09→	147	200	ATE		[+]	**PF0132**	146×54,7×19,5		LG		[-]	**PF0131**	87×53×17	OK039/ OK041
2.0	06/09→	147	200	ATE		[+]	**PF0135**	155,1×66×20,1		BSC	1KS/ØDisc 272×16	[-]	**PF0441**	109,2×53,3×17,5	OK033

MAGNETI MARELLI

		KW	CV												
				SiS	i	W.i.	MAGNETI MARELLI	W×H×Th (mm)	Extra kit [Opt]	SiS	i	W.i.	MAGNETI MARELLI	W×H×Th (mm)	Extra kit [Opt]
VOLKSWAGEN															
Golf VI (5K1)															
2.0 R 4motion	11/09→	188	256	ATE		[+]	**PF0132**	146×54,7×19,5		LG		[-]	**PF0131**	87×53×17	OK039/ OK041
2.0 R 4motion	11/09→	188	256	ATE		[+]	**PF0135**	155,1×66×20,1		BSC	1KS/ØDisc 272×16	[-]	**PF0441**	109,2×53,3×17,5	OK033
2.0 R 4motion	11/09→	195	265	ATE		[+]	**PF0132**	146×54,7×19,5		LG		[-]	**PF0131**	87×53×17	OK039/ OK041
2.0 R 4motion	11/09→	195	265	ATE		[+]	**PF0135**	155,1×66×20,1		BSC	1KS/ØDisc 272×16	[-]	**PF0441**	109,2×53,3×17,5	OK033
2.0 R 4motion	11/09→	199	270	ATE		[+]	**PF0132**	146×54,7×19,5		LG		[-]	**PF0131**	87×53×17	OK039/ OK041
2.0 R 4motion	11/09→	199	270	ATE		[+]	**PF0135**	155,1×66×20,1		BSC	1KS/ØDisc 272×16	[-]	**PF0441**	109,2×53,3×17,5	OK033
2.0 TDI	10/08→	103	140	ATE		[+]	**PF0132**	146×54,7×19,5		LG		[-]	**PF0131**	87×53×17	OK039/ OK041
2.0 TDI	10/08→	103	140	ATE		[+]	**PF0135**	155,1×66×20,1		BSC	1KS/ØDisc 272×16	[-]	**PF0441**	109,2×53,3×17,5	OK033
2.0 TDI	10/08→	81	110	ATE		[+]	**PF0132**	146×54,7×19,5		LG		[-]	**PF0131**	87×53×17	OK039/ OK041
2.0 TDI	10/08→	81	110	ATE		[+]	**PF0135**	155,1×66×20,1		BSC	1KS/ØDisc 272×16	[-]	**PF0441**	109,2×53,3×17,5	OK033
2.0 TDI	04/09→	125	170	ATE		[+]	**PF0132**	146×54,7×19,5		LG		[-]	**PF0131**	87×53×17	OK039/ OK041
2.0 TDI	04/09→	125	170	ATE		[+]	**PF0135**	155,1×66×20,1		BSC	1KS/ØDisc 272×16	[-]	**PF0441**	109,2×53,3×17,5	OK033
2.0 TDI	10/08→	100	136	ATE		[+]	**PF0132**	146×54,7×19,5		LG		[-]	**PF0131**	87×53×17	OK039/ OK041
2.0 TDI	10/08→	100	136	ATE		[+]	**PF0135**	155,1×66×20,1		BSC	1KS/ØDisc 272×16	[-]	**PF0441**	109,2×53,3×17,5	OK033
2.0 TDI 4motion	05/09→	103	140	ATE		[+]	**PF0132**	146×54,7×19,5		LG		[-]	**PF0131**	87×53×17	OK039/ OK041
2.0 TDI 4motion	05/09→	103	140	ATE		[+]	**PF0135**	155,1×66×20,1		BSC	1KS/ØDisc 272×16	[-]	**PF0441**	109,2×53,3×17,5	OK033
2.0 TSI	05/11→	173	235	ATE		[+]	**PF0132**	146×54,7×19,5		LG		[-]	**PF0131**	87×53×17	OK039/ OK041
2.0 TSI	05/11→	173	235	ATE		[+]	**PF0135**	155,1×66×20,1		BSC	1KS/ØDisc 272×16	[-]	**PF0441**	109,2×53,3×17,5	OK033
2.0 TSI	04/09→	155	210	ATE		[+]	**PF0132**	146×54,7×19,5		LG		[-]	**PF0131**	87×53×17	OK039/ OK041
2.0 TSI	04/09→	155	210	ATE		[+]	**PF0135**	155,1×66×20,1		BSC	1KS/ØDisc 272×16	[-]	**PF0441**	109,2×53,3×17,5	OK033
2.0 TSI	07/09→	147	200	ATE		[+]	**PF0132**	146×54,7×19,5		LG		[-]	**PF0131**	87×53×17	OK039/ OK041
2.0 TSI	07/09→	147	200	ATE		[+]	**PF0135**	155,1×66×20,1		BSC	1KS/ØDisc 272×16	[-]	**PF0441**	109,2×53,3×17,5	OK033

		KW	CV	SiS	i	W.i.	MAGNETI MARELLI	W×H×Th (mm)	Extra kit [Opt]	SiS	i	W.i.	MAGNETI MARELLI	W×H×Th (mm)	Extra kit [Opt]
VOLKSWAGEN															
Golf VI (5K1)															
2.5 FSI	08/09→	125	170	ATE		[+]	**PF0132**	146×54,7×19,5		LG		[-]	**PF0131**	87×53×17	OK039/ OK041
2.5 FSI	08/09→	125	170	ATE		[+]	**PF0135**	155,1×66×20,1		BSC	1KS/ØDisc 272×16	[-]	**PF0441**	109,2×53,3×17,5	OK033
Golf VI Cabriolet (517)															
1.2 TSI 16V	11/13→	77	105	ATE		[+]	**PF0657**	155,2×66×20,1		LG		[-]	**PF0131**	87×53×17	OK039/ OK041
1.2 TSI 16V	11/13→	77	105	ATE		[+]	**PF0657**	155,2×66×20,1		BSC	1KS/ØDisc 272×16	[-]	**PF0441**	109,2×53,3×17,5	OK033
1.2 TSI	03/11→	77	105	ATE		[+]	**PF0657**	155,2×66×20,1		LG		[-]	**PF0131**	87×53×17	OK039/ OK041
1.2 TSI	03/11→	77	105	ATE		[+]	**PF0657**	155,2×66×20,1		BSC	1KS/ØDisc 272×16	[-]	**PF0441**	109,2×53,3×17,5	OK033
1.4 TSI	11/11→	90	122	ATE		[+]	**PF0657**	155,2×66×20,1		LG		[-]	**PF0131**	87×53×17	OK039/ OK041
1.4 TSI	11/11→	90	122	ATE		[+]	**PF0657**	155,2×66×20,1		BSC	1KS/ØDisc 272×16	[-]	**PF0441**	109,2×53,3×17,5	OK033
1.4 TSI	03/11→	118	160	ATE		[+]	**PF0657**	155,2×66×20,1		LG		[-]	**PF0131**	87×53×17	OK039/ OK041
1.4 TSI	03/11→	118	160	ATE		[+]	**PF0657**	155,2×66×20,1		BSC	1KS/ØDisc 272×16	[-]	**PF0441**	109,2×53,3×17,5	OK033
1.6 TDI	03/11→	77	105	ATE		[+]	**PF0657**	155,2×66×20,1		LG		[-]	**PF0131**	87×53×17	OK039/ OK041
1.6 TDI	03/11→	77	105	ATE		[+]	**PF0657**	155,2×66×20,1		BSC	1KS/ØDisc 272×16	[-]	**PF0441**	109,2×53,3×17,5	OK033
2.0 TDI	11/11→	103	140	ATE		[+]	**PF0657**	155,2×66×20,1		LG		[-]	**PF0131**	87×53×17	OK039/ OK041
2.0 TDI	11/11→	103	140	ATE		[+]	**PF0657**	155,2×66×20,1		BSC	1KS/ØDisc 272×16	[-]	**PF0441**	109,2×53,3×17,5	OK033
2.0 TDI	11/13→	110	150	ATE		[+]	**PF0657**	155,2×66×20,1		LG		[-]	**PF0131**	87×53×17	OK039/ OK041
2.0 TDI	11/13→	110	150	ATE		[+]	**PF0657**	155,2×66×20,1		BSC	1KS/ØDisc 272×16	[-]	**PF0441**	109,2×53,3×17,5	OK033
2.0 TSI	11/11→	155	211	ATE		[+]	**PF0657**	155,2×66×20,1		LG		[-]	**PF0131**	87×53×17	OK039/ OK041
2.0 TSI	11/11→	155	211	ATE		[+]	**PF0657**	155,2×66×20,1		BSC	1KS/ØDisc 272×16	[-]	**PF0441**	109,2×53,3×17,5	OK033
2.0 TSI	11/13→	162	220	ATE		[+]	**PF0657**	155,2×66×20,1		LG		[-]	**PF0131**	87×53×17	OK039/ OK041
2.0 TSI	11/13→	162	220	ATE		[+]	**PF0657**	155,2×66×20,1		BSC	1KS/ØDisc 272×16	[-]	**PF0441**	109,2×53,3×17,5	OK033

MAGNETI MARELLI

		KW	CV												
				SiS	i	W.i.	MAGNETI MARELLI	W×H×Th (mm)	Extra kit [Opt]	SiS	i	W.i.	MAGNETI MARELLI	W×H×Th (mm)	Extra kit [Opt]
VOLKSWAGEN															
Golf Variant VI (AJ5)															
1.2 TSI	08/09→	77	105	ATE	14"/15"	[+]	**PF0516**	146×54,7×19,5		LG		[-]	**PF0131**	87×53×17	OK039/ OK041
1.2 TSI	08/09→	77	105	ATE		[+]	**PF0135**	155,1×66×20,1		BSC	1KS/ØDisc 272×16	[-]	**PF0441**	109,2×53,3×17,5	OK033
1.2 TSI	07/10→	63	86	ATE	14"/15"	[+]	**PF0516**	146×54,7×19,5		LG		[-]	**PF0131**	87×53×17	OK039/ OK041
1.2 TSI	07/10→	63	86	ATE		[+]	**PF0135**	155,1×66×20,1		BSC	1KS/ØDisc 272×16	[-]	**PF0441**	109,2×53,3×17,5	OK033
1.4	07/09→	59	80	ATE	14"/15"	[+]	**PF0516**	146×54,7×19,5		LG		[-]	**PF0131**	87×53×17	OK039/ OK041
1.4	07/09→	59	80	ATE		[+]	**PF0135**	155,1×66×20,1		BSC	1KS/ØDisc 272×16	[-]	**PF0441**	109,2×53,3×17,5	OK033
1.4 TSI	07/09→	90	122	ATE	14"/15"	[+]	**PF0516**	146×54,7×19,5		LG		[-]	**PF0131**	87×53×17	OK039/ OK041
1.4 TSI	07/09→	90	122	ATE		[+]	**PF0135**	155,1×66×20,1		BSC	1KS/ØDisc 272×16	[-]	**PF0441**	109,2×53,3×17,5	OK033
1.4 TSI	07/09→	118	160	ATE	14"/15"	[+]	**PF0516**	146×54,7×19,5		LG		[-]	**PF0131**	87×53×17	OK039/ OK041
1.4 TSI	07/09→	118	160	ATE		[+]	**PF0135**	155,1×66×20,1		BSC	1KS/ØDisc 272×16	[-]	**PF0441**	109,2×53,3×17,5	OK033
1.6	07/09→	75	102	ATE	14"/15"	[+]	**PF0516**	146×54,7×19,5		LG		[-]	**PF0131**	87×53×17	OK039/ OK041
1.6	07/09→	75	102	ATE		[+]	**PF0135**	155,1×66×20,1		BSC	1KS/ØDisc 272×16	[-]	**PF0441**	109,2×53,3×17,5	OK033
1.6 MultiFuel	07/09→	75	102	ATE	14"/15"	[+]	**PF0516**	146×54,7×19,5		LG		[-]	**PF0131**	87×53×17	OK039/ OK041
1.6 MultiFuel	07/09→	75	102	ATE		[+]	**PF0135**	155,1×66×20,1		BSC	1KS/ØDisc 272×16	[-]	**PF0441**	109,2×53,3×17,5	OK033
1.6 TDI	07/09→	77	105	ATE	14"/15"	[+]	**PF0516**	146×54,7×19,5		LG		[-]	**PF0131**	87×53×17	OK039/ OK041
1.6 TDI	07/09→	77	105	ATE		[+]	**PF0135**	155,1×66×20,1		BSC	1KS/ØDisc 272×16	[-]	**PF0441**	109,2×53,3×17,5	OK033
1.6 TDI	12/09→	66	90	ATE	14"/15"	[+]	**PF0516**	146×54,7×19,5		LG		[-]	**PF0131**	87×53×17	OK039/ OK041
1.6 TDI	12/09→	66	90	ATE		[+]	**PF0135**	155,1×66×20,1		BSC	1KS/ØDisc 272×16	[-]	**PF0441**	109,2×53,3×17,5	OK033
1.6 TDI 4motion	07/09→	77	105	ATE	14"/15"	[+]	**PF0516**	146×54,7×19,5		LG		[-]	**PF0131**	87×53×17	OK039/ OK041
1.6 TDI 4motion	07/09→	77	105	ATE		[+]	**PF0135**	155,1×66×20,1		BSC	1KS/ØDisc 272×16	[-]	**PF0441**	109,2×53,3×17,5	OK033
2.0 TDI	07/09→	100	136	ATE	14"/15"	[+]	**PF0516**	146×54,7×19,5		LG		[-]	**PF0131**	87×53×17	OK039/ OK041
2.0 TDI	07/09→	100	136	ATE		[+]	**PF0135**	155,1×66×20,1		BSC	1KS/ØDisc 272×16	[-]	**PF0441**	109,2×53,3×17,5	OK033

		KW	CV	SiS	i	W.i.	MAGNETI MARELLI	W×H×Th (mm)	Extra kit [Opt]	SiS	i	W.i.	MAGNETI MARELLI	W×H×Th (mm)	Extra kit [Opt]
VOLKSWAGEN															
Golf Variant VI (AJ5)															
2.0 TDI	07/09→	103	140	ATE	14"/15"	[+]	**PF0516**	146×54,7×19,5		LG		[-]	**PF0131**	87×53×17	OK039/ OK041
2.0 TDI	07/09→	103	140	ATE		[+]	**PF0135**	155,1×66×20,1		BSC	1KS/ØDisc 272×16	[-]	**PF0441**	109,2×53,3×17,5	OK033
2.0 TDI 16V	07/09→	103	140	ATE	14"/15"	[+]	**PF0516**	146×54,7×19,5		LG		[-]	**PF0131**	87×53×17	OK039/ OK041
2.0 TDI 16V	07/09→	103	140	ATE		[+]	**PF0135**	155,1×66×20,1		BSC	1KS/ØDisc 272×16	[-]	**PF0441**	109,2×53,3×17,5	OK033
Golf VII (5G1)															
1.2 TSI	11/12→	63	86	LG		[o]	**PF0716**	160,2×64,5×20,3	OK088	LG		[-]	**PF0131**	87×53×17	OK039/ OK041
1.2 TSI	11/12→	63	86	LG		[+]	**PF0715**	160×64,5×20,3	OK088	ATE	Ø Disc 310×22	[-]	**PF0713**	123×61,2×16	
1.2 TSI	11/12→	63	86	ATE	Ø Disc 276/15"	[+]	**PF0819**	146,1×62,5×17,5		ATE	Ø Disc 272×10	[-]	**PF0714**	123×61,2×16	
1.2 TSI	11/12→	77	105	LG		[o]	**PF0716**	160,2×64,5×20,3	OK088	LG		[-]	**PF0131**	87×53×17	OK039/ OK041
1.2 TSI	11/12→	77	105	LG		[+]	**PF0715**	160×64,5×20,3	OK088	ATE	Ø Disc 310×22	[-]	**PF0713**	123×61,2×16	
1.2 TSI	11/12→	77	105	ATE	Ø Disc 276/15"	[+]	**PF0819**	146,1×62,5×17,5		ATE	Ø Disc 272×10	[-]	**PF0714**	123×61,2×16	
1.2 TSI	04/14→	81	110	LG		[o]	**PF0716**	160,2×64,5×20,3	OK088	LG		[-]	**PF0131**	87×53×17	OK039/ OK041
1.2 TSI	04/14→	81	110	LG		[+]	**PF0715**	160×64,5×20,3	OK088	ATE	Ø Disc 310×22	[-]	**PF0713**	123×61,2×16	
1.2 TSI	04/14→	81	110	ATE	Ø Disc 276/15"	[+]	**PF0819**	146,1×62,5×17,5		ATE	Ø Disc 272×10	[-]	**PF0714**	123×61,2×16	
1.4 TGI	08/13→	81	110	LG		[o]	**PF0716**	160,2×64,5×20,3	OK088	LG		[-]	**PF0131**	87×53×17	OK039/ OK041
1.4 TGI	08/13→	81	110	LG		[+]	**PF0715**	160×64,5×20,3	OK088	ATE	Ø Disc 310×22	[-]	**PF0713**	123×61,2×16	
1.4 TGI	08/13→	81	110	ATE	Ø Disc 276/15"	[+]	**PF0819**	146,1×62,5×17,5		ATE	Ø Disc 272×10	[-]	**PF0714**	123×61,2×16	
1.4 TSI E85-100	11/12→	90	122	LG		[o]	**PF0716**	160,2×64,5×20,3	OK088	LG		[-]	**PF0131**	87×53×17	OK039/ OK041
1.4 TSI E85-100	11/12→	90	122	LG		[+]	**PF0715**	160×64,5×20,3	OK088	ATE	Ø Disc 310×22	[-]	**PF0713**	123×61,2×16	
1.4 TSI E85-100	11/12→	90	122	ATE	Ø Disc 276/15"	[+]	**PF0819**	146,1×62,5×17,5		ATE	Ø Disc 272×10	[-]	**PF0714**	123×61,2×16	
1.4 TSI	11/12→	90	122	LG		[o]	**PF0716**	160,2×64,5×20,3	OK088	LG		[-]	**PF0131**	87×53×17	OK039/ OK041
1.4 TSI	11/12→	90	122	LG		[+]	**PF0715**	160×64,5×20,3	OK088	ATE	Ø Disc 310×22	[-]	**PF0713**	123×61,2×16	

		KW	CV												
				SiS	i	W.i.	MAGNETI MARELLI	W×H×Th (mm)	Extra kit [Opt]	SiS	i	W.i.	MAGNETI MARELLI	W×H×Th (mm)	Extra kit [Opt]
VOLKSWAGEN															
Golf VII (5G1)															
1.4 TSI	11/12→	90	122	ATE	Ø Disc 276/15"	[+]	**PF0819**	146,1×62,5×17,5		ATE	Ø Disc 272×10	[-]	**PF0714**	123×61,2×16	
1.4 TSI	05/14→	92	125	LG		[o]	**PF0716**	160,2×64,5×20,3	OK088	LG		[-]	**PF0131**	87×53×17	OK039/ OK041
1.4 TSI	05/14→	92	125	LG		[+]	**PF0715**	160×64,5×20,3	OK088	ATE	Ø Disc 310×22	[-]	**PF0713**	123×61,2×16	
1.4 TSI	05/14→	92	125	ATE	Ø Disc 276/15"	[+]	**PF0819**	146,1×62,5×17,5		ATE	Ø Disc 272×10	[-]	**PF0714**	123×61,2×16	
1.4 TSI	11/12→	103	140	LG		[o]	**PF0716**	160,2×64,5×20,3	OK088	LG		[-]	**PF0131**	87×53×17	OK039/ OK041
1.4 TSI	11/12→	103	140	LG		[+]	**PF0715**	160×64,5×20,3	OK088	ATE	Ø Disc 310×22	[-]	**PF0713**	123×61,2×16	
1.4 TSI	11/12→	103	140	ATE	Ø Disc 276/15"	[+]	**PF0819**	146,1×62,5×17,5		ATE	Ø Disc 272×10	[-]	**PF0714**	123×61,2×16	
1.4 TSI	05/14→	110	150	LG		[o]	**PF0716**	160,2×64,5×20,3	OK088	LG		[-]	**PF0131**	87×53×17	OK039/ OK041
1.4 TSI	05/14→	110	150	LG		[+]	**PF0715**	160×64,5×20,3	OK088	ATE	Ø Disc 310×22	[-]	**PF0713**	123×61,2×16	
1.4 TSI	05/14→	110	150	ATE	Ø Disc 276/15"	[+]	**PF0819**	146,1×62,5×17,5		ATE	Ø Disc 272×10	[-]	**PF0714**	123×61,2×16	
1.6 TDI	11/12→	77	105	LG		[o]	**PF0716**	160,2×64,5×20,3	OK088	LG		[-]	**PF0131**	87×53×17	OK039/ OK041
1.6 TDI	11/12→	77	105	LG		[+]	**PF0715**	160×64,5×20,3	OK088	ATE	Ø Disc 310×22	[-]	**PF0713**	123×61,2×16	
1.6 TDI	11/12→	77	105	ATE	Ø Disc 276/15"	[+]	**PF0819**	146,1×62,5×17,5		ATE	Ø Disc 272×10	[-]	**PF0714**	123×61,2×16	
2.0 TDI	11/12→	110	150	LG		[o]	**PF0716**	160,2×64,5×20,3	OK088	LG		[-]	**PF0131**	87×53×17	OK039/ OK041
2.0 TDI	11/12→	110	150	LG		[+]	**PF0715**	160×64,5×20,3	OK088	ATE	Ø Disc 310×22	[-]	**PF0713**	123×61,2×16	
2.0 TDI	11/12→	110	150	LG		[+]	**PF0715**	160×64,5×20,3	OK088	ATE	Ø Disc 272×10	[-]	**PF0714**	123×61,2×16	
2.0 GTI	11/12→	110	150							ATE	Ø Disc 310×22	[-]	**PF0713**	123×61,2×16	
2.0 GTI	11/12→	110	150							ATE	Ø Disc 272×10	[-]	**PF0714**	123×61,2×16	
2.0 R	11/13→	206	280							ATE		[-]	**PF0713**	123×61,2×16	
2.0 R	11/13→	221	300							ATE		[-]	**PF0713**	123×61,2×16	
Golf Sportvan															
1.2 TSI	05/14→	63	86	LG	15"/17"	[+]	**PF0715**	160×64,5×20,3	OK088	ATE	Ø Disc 310×22/17"	[-]	**PF0713**	123×61,2×16	
1.2 TSI	05/14→	63	86	LG	15"/17"	[o]	**PF0716**	160,2×64,5×20,3	OK088	ATE	Ø Disc 272×10/15"	[-]	**PF0714**	123×61,2×16	

		KW	CV													
				SiS	i	W.i.	MAGNETI MARELLI	W×H×Th (mm)	Extra kit [Opt]	SiS	i	W.i.	MAGNETI MARELLI	W×H×Th (mm)	Extra kit [Opt]	
VOLKSWAGEN																
Golf Sportvan																
1.2 TSI	04/14→	81	110	LG	15"/17"	[+]	**PF0715**	160×64,5×20,3	OK088	ATE	Ø Disc 310×22/17"	[-]	**PF0713**	123×61,2×16		
1.2 TSI	04/14→	81	110	LG	15"/17"	[o]	**PF0716**	160,2×64,5×20,3	OK088	ATE	Ø Disc 272×10/15"	[-]	**PF0714**	123×61,2×16		
1.4 TSI	04/14→	92	125	LG	15"/17"	[+]	**PF0715**	160×64,5×20,3	OK088	ATE	Ø Disc 310×22/17"	[-]	**PF0713**	123×61,2×16		
1.4 TSI	04/14→	92	125	LG	15"/17"	[o]	**PF0716**	160,2×64,5×20,3	OK088	ATE	Ø Disc 272×10/15"	[-]	**PF0714**	123×61,2×16		
1.4 TSI	05/14→	110	150	LG	15"/17"	[+]	**PF0715**	160×64,5×20,3	OK088	ATE	Ø Disc 310×22/17"	[-]	**PF0713**	123×61,2×16		
1.4 TSI	05/14→	110	150	LG	15"/17"	[o]	**PF0716**	160,2×64,5×20,3	OK088	ATE	Ø Disc 272×10/15"	[-]	**PF0714**	123×61,2×16		
1.4 TSI MultiFuel	04/14→	92	125	LG	15"/17"	[+]	**PF0715**	160×64,5×20,3	OK088	ATE	Ø Disc 310×22/17"	[-]	**PF0713**	123×61,2×16		
1.4 TSI MultiFuel	04/14→	92	125	LG	15"/17"	[o]	**PF0716**	160,2×64,5×20,3	OK088	ATE	Ø Disc 272×10/15"	[-]	**PF0714**	123×61,2×16		
1.6	05/14→	81	110	LG	15"/17"	[+]	**PF0715**	160×64,5×20,3	OK088	ATE	Ø Disc 310×22/17"	[-]	**PF0713**	123×61,2×16		
1.6	05/14→	81	110	LG	15"/17"	[o]	**PF0716**	160,2×64,5×20,3	OK088	ATE	Ø Disc 272×10/15"	[-]	**PF0714**	123×61,2×16		
1.6 TDI	02/14→	66	90	LG	15"/17"	[+]	**PF0715**	160×64,5×20,3	OK088	ATE	Ø Disc 310×22/17"	[-]	**PF0713**	123×61,2×16		
1.6 TDI	02/14→	66	90	LG	15"/17"	[o]	**PF0716**	160,2×64,5×20,3	OK088	ATE	Ø Disc 272×10/15"	[-]	**PF0714**	123×61,2×16		
1.6 TDI	05/14→	81	110	LG	15"/17"	[+]	**PF0715**	160×64,5×20,3	OK088	ATE	Ø Disc 310×22/17"	[-]	**PF0713**	123×61,2×16		
1.6 TDI	05/14→	81	110	LG	15"/17"	[o]	**PF0716**	160,2×64,5×20,3	OK088	ATE	Ø Disc 272×10/15"	[-]	**PF0714**	123×61,2×16		
2.0 TDI	05/14→	81	110	LG	15"/17"	[+]	**PF0715**	160×64,5×20,3	OK088	ATE	Ø Disc 310×22/17"	[-]	**PF0713**	123×61,2×16		
2.0 TDI	05/14→	81	110	LG	15"/17"	[o]	**PF0716**	160,2×64,5×20,3	OK088	ATE	Ø Disc 272×10/15"	[-]	**PF0714**	123×61,2×16		
2.0 TDI	05/14→	110	150	LG	15"/17"	[+]	**PF0715**	160×64,5×20,3	OK088	ATE	Ø Disc 310×22/17"	[-]	**PF0713**	123×61,2×16		
2.0 TDI	05/14→	110	150	LG	15"/17"	[o]	**PF0716**	160,2×64,5×20,3	OK088	ATE	Ø Disc 272×10/15"	[-]	**PF0714**	123×61,2×16		
Golf SW VII (BA5)																
1.2 TSI	07/13→	63	86	LG		[+]	**PF0715**	160×64,5×20,3	OK088	ATE	Ø Disc 310×22	[-]	**PF0713**	123×61,2×16		
1.2 TSI	04/13→	63	86	LG		[o]	**PF0716**	160,2×64,5×20,3	OK088	ATE	Ø Disc 272×10	[-]	**PF0714**	123×61,2×16		
1.2 TSI	04/14→	81	110	LG		[+]	**PF0715**	160×64,5×20,3	OK088	ATE	Ø Disc 310×22	[-]	**PF0713**	123×61,2×16		

		KW	CV													
				SiS	i	W.i.	MAGNETI MARELLI	W×H×Th (mm)	Extra kit [Opt]	SiS	i	W.i.	MAGNETI MARELLI	W×H×Th (mm)	Extra kit [Opt]
VOLKSWAGEN															
Golf SW VII (BA5)															
1.2 TSI	04/14→	81	110	LG		[o]	**PF0716**	160,2×64,5×20,3	OK088	ATE	Ø Disc 272×10	[-]	**PF0714**	123×61,2×16	
1.2 TSI MultiFuel	04/13→	77	105	LG		[+]	**PF0715**	160×64,5×20,3	OK088	ATE	Ø Disc 310×22	[-]	**PF0713**	123×61,2×16	
1.2 TSI MultiFuel	04/13→	77	105	LG		[o]	**PF0716**	160,2×64,5×20,3	OK088	ATE	Ø Disc 272×10	[-]	**PF0714**	123×61,2×16	
1.4 TSI	07/13→	90	122	LG		[+]	**PF0715**	160×64,5×20,3	OK088	ATE	Ø Disc 310×22	[-]	**PF0713**	123×61,2×16	
1.4 TSI	07/13→	90	122	LG		[o]	**PF0716**	160,2×64,5×20,3	OK088	ATE	Ø Disc 272×10	[-]	**PF0714**	123×61,2×16	
1.4 TSI	05/14→	92	125	LG		[+]	**PF0715**	160×64,5×20,3	OK088	ATE	Ø Disc 310×22	[-]	**PF0713**	123×61,2×16	
1.4 TSI	05/14→	92	125	LG		[o]	**PF0716**	160,2×64,5×20,3	OK088	ATE	Ø Disc 272×10	[-]	**PF0714**	123×61,2×16	
1.4 TSI	05/13→	103	140	LG		[+]	**PF0715**	160×64,5×20,3	OK088	ATE	Ø Disc 310×22	[-]	**PF0713**	123×61,2×16	
1.4 TSI	05/13→	103	140	LG		[o]	**PF0716**	160,2×64,5×20,3	OK088	ATE	Ø Disc 272×10	[-]	**PF0714**	123×61,2×16	
1.4 TSI BiFuel	09/13→	81	110	LG		[+]	**PF0715**	160×64,5×20,3	OK088	ATE	Ø Disc 310×22	[-]	**PF0713**	123×61,2×16	
1.4 TSI BiFuel	09/13→	81	110	LG		[o]	**PF0716**	160,2×64,5×20,3	OK088	ATE	Ø Disc 272×10	[-]	**PF0714**	123×61,2×16	
1.4 TSI CNG	09/13→	81	110	LG		[+]	**PF0715**	160×64,5×20,3	OK088	ATE	Ø Disc 310×22	[-]	**PF0713**	123×61,2×16	
1.4 TSI CNG	09/13→	81	110	LG		[o]	**PF0716**	160,2×64,5×20,3	OK088	ATE	Ø Disc 272×10	[-]	**PF0714**	123×61,2×16	
1.6 TDI	05/13→	66	90	LG		[+]	**PF0715**	160×64,5×20,3	OK088	ATE	Ø Disc 310×22	[-]	**PF0713**	123×61,2×16	
1.6 TDI	05/13→	66	90	LG		[o]	**PF0716**	160,2×64,5×20,3	OK088	ATE	Ø Disc 272×10	[-]	**PF0714**	123×61,2×16	
1.6 TDI	07/13→	77	105	LG		[+]	**PF0715**	160×64,5×20,3	OK088	ATE	Ø Disc 310×22	[-]	**PF0713**	123×61,2×16	
1.6 TDI	07/13→	77	105	LG		[o]	**PF0716**	160,2×64,5×20,3	OK088	ATE	Ø Disc 272×10	[-]	**PF0714**	123×61,2×16	
1.6 TDI 4x4	05/13→	77	105	LG		[+]	**PF0715**	160×64,5×20,3	OK088	ATE	Ø Disc 310×22	[-]	**PF0713**	123×61,2×16	
1.6 TDI 4x4	05/13→	77	105	LG		[o]	**PF0716**	160,2×64,5×20,3	OK088	ATE	Ø Disc 272×10	[-]	**PF0714**	123×61,2×16	
1.6 TDI	05/13→	81	110	LG		[+]	**PF0715**	160×64,5×20,3	OK088	ATE	Ø Disc 310×22	[-]	**PF0713**	123×61,2×16	
1.6 TDI	05/13→	81	110	LG		[o]	**PF0716**	160,2×64,5×20,3	OK088	ATE	Ø Disc 272×10	[-]	**PF0714**	123×61,2×16	
2.0 TDI	05/13→	81	110	LG		[+]	**PF0715**	160×64,5×20,3	OK088	ATE	Ø Disc 310×22	[-]	**PF0713**	123×61,2×16	

		KW	CV												
				SiS	i	W.i.	MAGNETI MARELLI	W×H×Th (mm)	Extra kit [Opt]	SiS	i	W.i.	MAGNETI MARELLI	W×H×Th (mm)	Extra kit [Opt]
VOLKSWAGEN															
Golf SW VII (BA5)															
2.0 TDI	05/13→	81	110	LG		[o]	**PF0716**	160,2×64,5×20,3	OK088	ATE	Ø Disc 272×10	[-]	**PF0714**	123×61,2×16	
2.0 TDI	07/13→	110	150	LG		[+]	**PF0715**	160×64,5×20,3	OK088	ATE	Ø Disc 310×22	[-]	**PF0713**	123×61,2×16	
2.0 TDI	07/13→	110	150	LG		[o]	**PF0716**	160,2×64,5×20,3	OK088	ATE	Ø Disc 272×10	[-]	**PF0714**	123×61,2×16	
2.0 TDI 4x4	04/13→	110	150	LG		[+]	**PF0715**	160×64,5×20,3	OK088	ATE	Ø Disc 310×22	[-]	**PF0713**	123×61,2×16	
2.0 TDI 4x4	04/13→	110	150	LG		[o]	**PF0716**	160,2×64,5×20,3	OK088	ATE	Ø Disc 272×10	[-]	**PF0714**	123×61,2×16	
Jetta II (19E,1G2)															
1.1	83→91			KH		[-]	**PF0395**	138×51,2×17,2							
1.3	83→91			KH		[-]	**PF0395**	138×51,2×17,2							
1.6	83→91			KH		[-]	**PF0392**	138×49×19,5							
1.6 D	83→91			KH		[-]	**PF0395**	138×51,2×17,2							
1.6 D	83→91			KH	+AUT	[-]	**PF0392**	138×49×19,5							
1.6 TD	83→91			KH		[-]	**PF0392**	138×49×19,5							
1.6 GTD	83→91			KH		[-]	**PF0392**	138×49×19,5							
1.8	83→91			KH		[-]	**PF0392**	138×49×19,5							
1.8 Syncro	83→91			KH		[-]	**PF0392**	138×49×19,5							
1.8i 16V GTI	88→90									LG		[-]	**PF0144**	87×53×15	OK039
1.8i 16V GT	86→91			LG		[-]	**PF0806**	119×69,7×16	OK030	LG		[-]	**PF0144**	87×53×15	OK039
1.8i GT	83→91			KH		[-]	**PF0394**	138×49×15		LG		[-]	**PF0144**	87×53×15	OK039
G60	88→91									LG		[-]	**PF0144**	87×53×15	OK039
Jetta III (1K2)															
1.4 16V	08/06→13			ATE		[+]	**PF0515**	146×54,7×19,5		LG		[-]	**PF0601**	105,5×56×16,7	OK039/ OK085
1.4 16V	08/06→13			ATE		[+]	**PF0135**	155,1×66×20,1		LG		[-]	**PF0601**	105,5×56×16,7	OK039/ OK085
1.6	08/05→13			ATE		[+]	**PF0132**	146×54,7×19,5		LG		[-]	**PF0601**	105,5×56×16,7	OK039/ OK085
1.6	08/05→13			ATE		[+]	**PF0135**	155,1×66×20,1		LG		[-]	**PF0601**	105,5×56×16,7	OK039/ OK085
1.6 16V Fsi	08/05→13			ATE		[+]	**PF0132**	146×54,7×19,5		LG		[-]	**PF0601**	105,5×56×16,7	OK039/ OK085
1.6 16V Fsi	08/05→13			ATE		[+]	**PF0135**	155,1×66×20,1		LG		[-]	**PF0601**	105,5×56×16,7	OK039/ OK085
1.9 TDI	08/05→13			ATE		[+]	**PF0132**	146×54,7×19,5		LG		[-]	**PF0601**	105,5×56×16,7	OK039/ OK085
1.9 TDI	08/05→13			ATE		[+]	**PF0135**	155,1×66×20,1		LG		[-]	**PF0601**	105,5×56×16,7	OK039/ OK085
1.9 TDI DPF	08/06→13			ATE		[+]	**PF0132**	146×54,7×19,5		LG		[-]	**PF0601**	105,5×56×16,7	OK039/ OK085

		KW	CV													
				SiS	i	W.i.	MAGNETI MARELLI	W×H×Th (mm)	Extra kit [Opt]	SiS	i	W.i.	MAGNETI MARELLI	W×H×Th (mm)	Extra kit [Opt]
VOLKSWAGEN															
Jetta III (1K2)															
1.9 TDI DPF	08/06 → 13			ATE		[+]	**PF0135**	155,1×66×20,1		LG		[-]	**PF0601**	105,5×56×16,7	OK039/ OK085
2.0 Fsi	08/05 → 13			ATE		[+]	**PF0132**	146×54,7×19,5		LG		[-]	**PF0601**	105,5×56×16,7	OK039/ OK085
2.0 Fsi	08/05 → 13			ATE		[+]	**PF0135**	155,1×66×20,1		LG		[-]	**PF0601**	105,5×56×16,7	OK039/ OK085
2.0 TDI	08/05 → 13			ATE		[+]	**PF0132**	146×54,7×19,5		LG		[-]	**PF0601**	105,5×56×16,7	OK039/ OK085
2.0 TDI	08/05 → 13			ATE		[+]	**PF0135**	155,1×66×20,1		LG		[-]	**PF0601**	105,5×56×16,7	OK039/ OK085
Jetta IV (162)															
1.2 TSI	02/11 → 13	77	105	ATE		[+]	**PF0515**	146×54,7×19,5		BSC	1KS/ØDisc 272×16	[-]	**PF0441**	109,2×53,3×17,5	OK033
1.2 TSI	02/11 → 13	77	105	ATE		[+]	**PF0135**	155,1×66×20,1		BSC	1KS/ØDisc 272×16	[-]	**PF0441**	109,2×53,3×17,5	OK033
1.4 TSI	04/11 → 13	118	160	ATE		[+]	**PF0515**	146×54,7×19,5		BSC	1KS/ØDisc 272×16	[-]	**PF0441**	109,2×53,3×17,5	OK033
1.4 TSI	04/11 → 13	118	160	ATE		[+]	**PF0135**	155,1×66×20,1		BSC	1KS/ØDisc 272×16	[-]	**PF0441**	109,2×53,3×17,5	OK033
1.6 TDI	02/11 → 13	77	105	ATE		[+]	**PF0515**	146×54,7×19,5		BSC	1KS/ØDisc 272×16	[-]	**PF0441**	109,2×53,3×17,5	OK033
1.6 TDI	02/11 → 13	77	105	ATE		[+]	**PF0135**	155,1×66×20,1		BSC	1KS/ØDisc 272×16	[-]	**PF0441**	109,2×53,3×17,5	OK033
2.0	06/10 → 13	85	115	ATE		[+]	**PF0515**	146×54,7×19,5		BSC	1KS/ØDisc 272×16	[-]	**PF0441**	109,2×53,3×17,5	OK033
2.0	06/10 → 13	85	115	ATE		[+]	**PF0135**	155,1×66×20,1		BSC	1KS/ØDisc 272×16	[-]	**PF0441**	109,2×53,3×17,5	OK033
2.0 TDI	02/11 → 13	103	140	ATE		[+]	**PF0515**	146×54,7×19,5		BSC	1KS/ØDisc 272×16	[-]	**PF0441**	109,2×53,3×17,5	OK033
2.0 TDI	02/11 → 13	103	140	ATE		[+]	**PF0135**	155,1×66×20,1		BSC	1KS/ØDisc 272×16	[-]	**PF0441**	109,2×53,3×17,5	OK033
2.0 TDI	10/10 → 13	81	110	ATE		[+]	**PF0515**	146×54,7×19,5		BSC	1KS/ØDisc 272×16	[-]	**PF0441**	109,2×53,3×17,5	OK033
2.0 TDI	10/10 → 13	81	110	ATE		[+]	**PF0135**	155,1×66×20,1		BSC	1KS/ØDisc 272×16	[-]	**PF0441**	109,2×53,3×17,5	OK033
2.0 TSI	12/10 → 13	147	200	ATE		[+]	**PF0515**	146×54,7×19,5		BSC	1KS/ØDisc 272×16	[-]	**PF0441**	109,2×53,3×17,5	OK033
2.0 TSI	12/10 → 13	147	200	ATE		[+]	**PF0135**	155,1×66×20,1		BSC	1KS/ØDisc 272×16	[-]	**PF0441**	109,2×53,3×17,5	OK033
2.5 FSI	04/10 → 13	125	170	ATE		[+]	**PF0515**	146×54,7×19,5		BSC	1KS/ØDisc 272×16	[-]	**PF0441**	109,2×53,3×17,5	OK033
2.5 FSI	04/10 → 13	125	170	ATE		[+]	**PF0135**	155,1×66×20,1		BSC	1KS/ØDisc 272×16	[-]	**PF0441**	109,2×53,3×17,5	OK033

		KW	CV												
				SiS	i	W.i.	MAGNETI MARELLI	W×H×Th (mm)	Extra kit [Opt]	SiS	i	W.i.	MAGNETI MARELLI	W×H×Th (mm)	Extra kit [Opt]
VOLKSWAGEN															
LT II (2D_)															
28 1.9	96→			ATE		[o]	**PF0504**	156,5×64,8×20,5		ATE		[o]	**PF0322**	141,4×50,1×17	OK023
28 1.9	96→			ATE	+w.i.	[+]	**PF0321**	156,5×64,8×20,5		BSC		[o]	**PF0319**	125,9×61,9×18,8	
28 2.0	96→			ATE		[o]	**PF0504**	156,5×64,8×20,5		ATE		[o]	**PF0322**	141,4×50,1×17	OK023
28 2.0	96→			ATE	+w.i.	[+]	**PF0321**	156,5×64,8×20,5		BSC		[o]	**PF0319**	125,9×61,9×18,8	
28 2.4	96→			ATE		[o]	**PF0504**	156,5×64,8×20,5		ATE		[o]	**PF0322**	141,4×50,1×17	OK023
28 2.4	96→			ATE	+w.i.	[+]	**PF0321**	156,5×64,8×20,5		BSC		[o]	**PF0319**	125,9×61,9×18,8	
28 2.4 D	96→			ATE		[o]	**PF0504**	156,5×64,8×20,5		ATE		[o]	**PF0322**	141,4×50,1×17	OK023
28 2.4 D	96→			ATE	+w.i.	[+]	**PF0321**	156,5×64,8×20,5		BSC		[o]	**PF0319**	125,9×61,9×18,8	
28 2.7 D	96→			ATE		[o]	**PF0504**	156,5×64,8×20,5		ATE		[o]	**PF0322**	141,4×50,1×17	OK023
28 2.7 D	96→			ATE	+w.i.	[+]	**PF0321**	156,5×64,8×20,5		BSC		[o]	**PF0319**	125,9×61,9×18,8	
35 2.0	96→98			ATE		[o]	**PF0504**	156,5×64,8×20,5		ATE		[o]	**PF0505**	156,4×54,8×18,5	OK023
35 2.0	96→98			ATE	+w.i.	[+]	**PF0321**	156,5×64,8×20,5		BSC		[o]	**PF0319**	125,9×61,9×18,8	
35 2.4	96→98			ATE		[o]	**PF0504**	156,5×64,8×20,5		ATE		[o]	**PF0505**	156,4×54,8×18,5	OK023
35 2.4	96→98			ATE	+w.i.	[+]	**PF0321**	156,5×64,8×20,5		BSC		[o]	**PF0319**	125,9×61,9×18,8	
35 2.4 D	96→98			ATE		[o]	**PF0504**	156,5×64,8×20,5		ATE		[o]	**PF0505**	156,4×54,8×18,5	OK023
35 2.4 D	96→98			ATE	+w.i.	[+]	**PF0321**	156,5×64,8×20,5		BSC		[o]	**PF0319**	125,9×61,9×18,8	
35 2.7 D	96→98			ATE		[o]	**PF0504**	156,5×64,8×20,5		ATE		[o]	**PF0505**	156,4×54,8×18,5	OK023
35 2.7 D	96→98			ATE	+w.i.	[+]	**PF0321**	156,5×64,8×20,5		BSC		[o]	**PF0319**	125,9×61,9×18,8	
35 2.0	98→			ATE		[o]	**PF0504**	156,5×64,8×20,5		ATE		[o]	**PF0506**	156,4×54,8×17,5	OK023
35 2.0	98→			ATE	+w.i.	[+]	**PF0321**	156,5×64,8×20,5		BSC		[o]	**PF0319**	125,9×61,9×18,8	
35 2.4	98→			ATE		[o]	**PF0504**	156,5×64,8×20,5		ATE		[o]	**PF0506**	156,4×54,8×17,5	OK023
35 2.4	98→			ATE	+w.i.	[+]	**PF0321**	156,5×64,8×20,5		BSC		[o]	**PF0319**	125,9×61,9×18,8	
35 2.4 D	98→			ATE		[o]	**PF0504**	156,5×64,8×20,5		ATE		[o]	**PF0506**	156,4×54,8×17,5	OK023
35 2.4 D	98→			ATE	+w.i.	[+]	**PF0321**	156,5×64,8×20,5		BSC		[o]	**PF0319**	125,9×61,9×18,8	
35 2.7 D	98→			ATE		[o]	**PF0504**	156,5×64,8×20,5		ATE		[o]	**PF0506**	156,4×54,8×17,5	OK023
35 2.7 D	98→			ATE	+w.i.	[+]	**PF0321**	156,5×64,8×20,5		ATE		[o]	**PF0506**	156,4×54,8×17,5	
35 2.8 TDI	98→			ATE		[o]	**PF0504**	156,5×64,8×20,5		BSC		[o]	**PF0319**	125,9×61,9×18,8	OK021
35 2.8 TDI	98→			ATE	+w.i.	[+]	**PF0321**	156,5×64,8×20,5		ATE		[o]	**PF0506**	156,4×54,8×17,5	
46	97→			PT	+KIT	[-]	**PF0524**	164,6×73×20	OK030	PT	+KIT	[-]	**PF0524**	164,6×73×20	OK030
Lupo (6X,6E)															
1.0i	97→9/05			ATE		[-]	**PF0388**	137,8×49×17		LG	+Rear Disc	[-]	**PF0144**	87×53×15	OK039
1.2 TDI	00→9/05			ATE		[-]	**PF0411**	141,8×48,1×14,3		LG	+Rear Disc	[-]	**PF0144**	87×53×15	OK039
1.2 TDI	01→9/05			ATE		[+]	**PF0535**	141,8×48,1×14,3		LG	+Rear Disc	[-]	**PF0144**	87×53×15	OK039
1.4 TDI	00→9/05			ATE		[-]	**PF0388**	137,8×49×17		LG	+Rear Disc	[-]	**PF0144**	87×53×15	OK039
1.4i	97→9/05			ATE		[-]	**PF0388**	137,8×49×17		LG	+Rear Disc	[-]	**PF0144**	87×53×15	OK039
1.4i	99→9/05			LG		[-]	**PF0389**	119×69,5×16	OK032	LG	+Rear Disc	[-]	**PF0144**	87×53×15	OK039
1.6 TDI	00→9/05			ATE		[-]	**PF0411**	141,8×48,1×14,3		LG	+Rear Disc	[-]	**PF0144**	87×53×15	OK039
1.6 TDI	01→9/05			ATE		[+]	**PF0535**	141,8×48,1×14,3		LG	+Rear Disc	[-]	**PF0144**	87×53×15	OK039
1.7 TDI	97→9/05			ATE		[-]	**PF0388**	137,8×49×17		LG	+Rear Disc	[-]	**PF0144**	87×53×15	OK039
Multivan (7H/7E)															
1.9 TDI	04/03→11/09	77	105	ATE	Ø Disc 333/17"	[+]	**PF0413**	155,2×73,5×17,9		LG		[+]	**PF0412**	116,2×59×17,5	OK033/ OK091
1.9 TDI	04/03→11/09	77	105	ATE	Ø Disc 308/16"	[+]	**PF0414**	155,2×73,5×17,9		LG		[+]	**PF0412**	116,2×59×17,5	OK033/ OK091

MAGNETI MARELLI

		KW	CV													
				SiS	i	W.i.	MAGNETI MARELLI	W×H×Th (mm)	Extra kit [Opt]	SiS	i	W.i.	MAGNETI MARELLI	W×H×Th (mm)	Extra kit [Opt]
VOLKSWAGEN															
Multivan (7H/7E)															
1.9 TDI	06/06 → 11/09	75	102	ATE	Ø Disc 333/17"	[+]	**PF0413**	155,2×73,5×17,9		LG		[+]	**PF0412**	116,2×59×17,5	OK033/ OK091
1.9 TDI	06/06 → 11/09	75	102	ATE	Ø Disc 308/16"	[+]	**PF0414**	155,2×73,5×17,9		LG		[+]	**PF0412**	116,2×59×17,5	OK033/ OK091
1.9 TDI	01/06 → 11/09	62	84	ATE	Ø Disc 333/17"	[+]	**PF0413**	155,2×73,5×17,9		LG		[+]	**PF0412**	116,2×59×17,5	OK033/ OK091
1.9 TDI	01/06 → 11/09	62	84	ATE	Ø Disc 308/16"	[+]	**PF0414**	155,2×73,5×17,9		LG		[+]	**PF0412**	116,2×59×17,5	OK033/ OK091
2.0	11/03 →	85	115	ATE	Ø Disc 333/17"	[+]	**PF0413**	155,2×73,5×17,9		LG		[+]	**PF0412**	116,2×59×17,5	OK033/ OK091
2.0	11/03 →	85	115	ATE	Ø Disc 308/16"	[+]	**PF0414**	155,2×73,5×17,9		LG		[+]	**PF0412**	116,2×59×17,5	OK033/ OK091
2.0 BiTDI	09/09 →	132	180	ATE	Ø Disc 333/17"	[+]	**PF0413**	155,2×73,5×17,9		LG		[+]	**PF0412**	116,2×59×17,5	OK033/ OK091
2.0 BiTDI	09/09 →	132	180	ATE	Ø Disc 308/16"	[+]	**PF0414**	155,2×73,5×17,9		LG		[+]	**PF0412**	116,2×59×17,5	OK033/ OK091
2.0 BiTDI 4motion	09/09 →	132	180	ATE	Ø Disc 333/17"	[+]	**PF0413**	155,2×73,5×17,9		LG		[+]	**PF0412**	116,2×59×17,5	OK033/ OK091
2.0 BiTDI 4motion	09/09 →	132	180	ATE	Ø Disc 308/16"	[+]	**PF0414**	155,2×73,5×17,9		LG		[+]	**PF0412**	116,2×59×17,5	OK033/ OK091
2.0 TDI	05/10 →	100	136	ATE	Ø Disc 333/17"	[+]	**PF0413**	155,2×73,5×17,9		LG		[+]	**PF0412**	116,2×59×17,5	OK033/ OK091
2.0 TDI	05/10 →	100	136	ATE	Ø Disc 308/16"	[+]	**PF0414**	155,2×73,5×17,9		LG		[+]	**PF0412**	116,2×59×17,5	OK033/ OK091
2.0 TDI	09/09 →	62	84	ATE	Ø Disc 333/17"	[+]	**PF0413**	155,2×73,5×17,9		LG		[+]	**PF0412**	116,2×59×17,5	OK033/ OK091
2.0 TDI	09/09 →	62	84	ATE	Ø Disc 308/16"	[+]	**PF0414**	155,2×73,5×17,9		LG		[+]	**PF0412**	116,2×59×17,5	OK033/ OK091
2.0 TDI	09/09 →	75	102	ATE	Ø Disc 333/17"	[+]	**PF0413**	155,2×73,5×17,9		LG		[+]	**PF0412**	116,2×59×17,5	OK033/ OK091
2.0 TDI	09/09 →	75	102	ATE	Ø Disc 308/16"	[+]	**PF0414**	155,2×73,5×17,9		LG		[+]	**PF0412**	116,2×59×17,5	OK033/ OK091
2.0 TDI	09/09 →	103	140	ATE	Ø Disc 333/17"	[+]	**PF0413**	155,2×73,5×17,9		LG		[+]	**PF0412**	116,2×59×17,5	OK033/ OK091
2.0 TDI	09/09 →	103	140	ATE	Ø Disc 308/16"	[+]	**PF0414**	155,2×73,5×17,9		LG		[+]	**PF0412**	116,2×59×17,5	OK033/ OK091
2.0 TDI 4motion	05/10 →	100	136	ATE	Ø Disc 333/17"	[+]	**PF0413**	155,2×73,5×17,9		LG		[+]	**PF0412**	116,2×59×17,5	OK033/ OK091
2.0 TDI 4motion	05/10 →	100	136	ATE	Ø Disc 308/16"	[+]	**PF0414**	155,2×73,5×17,9		LG		[+]	**PF0412**	116,2×59×17,5	OK033/ OK091
2.0 TDI 4motion	09/09 →	103	140	ATE	Ø Disc 333/17"	[+]	**PF0413**	155,2×73,5×17,9		LG		[+]	**PF0412**	116,2×59×17,5	OK033/ OK091
2.0 TDI 4motion	09/09 →	103	140	ATE	Ø Disc 308/16"	[+]	**PF0414**	155,2×73,5×17,9		LG		[+]	**PF0412**	116,2×59×17,5	OK033/ OK091

		KW	CV	SiS	i	W.i.	MAGNETI MARELLI	W×H×Th (mm)	Extra kit [Opt]	SiS	i	W.i.	MAGNETI MARELLI	W×H×Th (mm)	Extra kit [Opt]
VOLKSWAGEN															
Multivan (7H/7E)															
2.5 TDI	04/03 → 11/09	96	130	ATE	Ø Disc 333/17"	[+]	**PF0413**	155,2×73,5×17,9		LG		[+]	**PF0412**	116,2×59×17,5	OK033/ OK091
2.5 TDI	04/03 → 11/09	96	130	ATE	Ø Disc 308/16"	[+]	**PF0414**	155,2×73,5×17,9		LG		[+]	**PF0412**	116,2×59×17,5	OK033/ OK091
2.5 TDI	04/03 → 11/09	128	174	ATE	Ø Disc 333/17"	[+]	**PF0413**	155,2×73,5×17,9		LG		[+]	**PF0412**	116,2×59×17,5	OK033/ OK091
2.5 TDI	04/03 → 11/09	128	174	ATE	Ø Disc 308/16"	[+]	**PF0414**	155,2×73,5×17,9		LG		[+]	**PF0412**	116,2×59×17,5	OK033/ OK091
2.5 TDI	11/03 → 11/09	120	163	ATE	Ø Disc 333/17"	[+]	**PF0413**	155,2×73,5×17,9		LG		[+]	**PF0412**	116,2×59×17,5	OK033/ OK091
2.5 TDI	11/03 → 11/09	120	163	ATE	Ø Disc 308/16"	[+]	**PF0414**	155,2×73,5×17,9		LG		[+]	**PF0412**	116,2×59×17,5	OK033/ OK091
2.5 TDI 4motion	07/04 → 11/09	96	130	ATE	Ø Disc 333/17"	[+]	**PF0413**	155,2×73,5×17,9		LG		[+]	**PF0412**	116,2×59×17,5	OK033/ OK091
2.5 TDI 4motion	07/04 → 11/09	96	130	ATE	Ø Disc 308/16"	[+]	**PF0414**	155,2×73,5×17,9		LG		[+]	**PF0412**	116,2×59×17,5	OK033/ OK091
2.5 TDI 4motion	07/04 → 11/09	128	174	ATE	Ø Disc 333/17"	[+]	**PF0413**	155,2×73,5×17,9		LG		[+]	**PF0412**	116,2×59×17,5	OK033/ OK091
2.5 TDI 4motion	07/04 → 11/09	128	174	ATE	Ø Disc 308/16"	[+]	**PF0414**	155,2×73,5×17,9		LG		[+]	**PF0412**	116,2×59×17,5	OK033/ OK091
3.2 4motion	11/03 → 06/06	170	231	ATE	Ø Disc 333/17"	[+]	**PF0413**	155,2×73,5×17,9		LG		[+]	**PF0412**	116,2×59×17,5	OK033/ OK091
3.2 4motion	11/03 → 06/06	170	231	ATE	Ø Disc 308/16"	[+]	**PF0414**	155,2×73,5×17,9		LG		[+]	**PF0412**	116,2×59×17,5	OK033/ OK091
3.2 V6	02/04 → 06/04	170	231	ATE	Ø Disc 333/17"	[+]	**PF0413**	155,2×73,5×17,9		LG		[+]	**PF0412**	116,2×59×17,5	OK033/ OK091
3.2 V6	02/04 → 06/04	170	231	ATE	Ø Disc 308/16"	[+]	**PF0414**	155,2×73,5×17,9		LG		[+]	**PF0412**	116,2×59×17,5	OK033/ OK091
3.2 V6	02/04 → 11/09	173	235	ATE	Ø Disc 333/17"	[+]	**PF0413**	155,2×73,5×17,9		LG		[+]	**PF0412**	116,2×59×17,5	OK033/ OK091
3.2 V6	02/04 → 11/09	173	235	ATE	Ø Disc 308/16"	[+]	**PF0414**	155,2×73,5×17,9		LG		[+]	**PF0412**	116,2×59×17,5	OK033/ OK091
3.2 V6 4motion	07/04 → 11/09	173	235	ATE	Ø Disc 333/17"	[+]	**PF0413**	155,2×73,5×17,9		LG		[+]	**PF0412**	116,2×59×17,5	OK033/ OK091
3.2 V6 4motion	07/04 → 11/09	173	235	ATE	Ø Disc 308/16"	[+]	**PF0414**	155,2×73,5×17,9		LG		[+]	**PF0412**	116,2×59×17,5	OK033/ OK091
New Beetle (9C_/1C_)															
1.6i 16V	00 → 11			ATE		[-]	**PF0134**	146×54,7×19,5		LG		[-]	**PF0131**	87×53×17	OK039/ OK041
1.8i	98 → 11			LG		[-]	**PF0389**	119×69,5×16	OK032	LG		[-]	**PF0131**	87×53×17	OK039/ OK041
1.8i	98 → 11			ATE		[-]	**PF0134**	146×54,7×19,5		LG		[-]	**PF0131**	87×53×17	OK039/ OK041

		KW	CV	SiS	i	W.i.	MAGNETI MARELLI	W×H×Th (mm)	Extra kit [Opt]	SiS	i	W.i.	MAGNETI MARELLI	W×H×Th (mm)	Extra kit [Opt]
VOLKSWAGEN															
New Beetle (9C_/1C_)															
1.8i	99→11			ATE		[+]	**PF0516**	146×54,7×19,5		LG		[-]	**PF0131**	87×53×17	OK039/ OK041
1.9 TD	98→11			LG		[-]	**PF0389**	119×69,5×16	OK032	LG		[-]	**PF0131**	87×53×17	OK039/ OK041
1.9 TD	98→11			ATE		[-]	**PF0134**	146×54,7×19,5		LG		[-]	**PF0131**	87×53×17	OK039/ OK041
1.9 TD	99→11			ATE		[+]	**PF0516**	146×54,7×19,5		LG		[-]	**PF0131**	87×53×17	OK039/ OK041
2.0i	98→11			LG		[-]	**PF0389**	119×69,5×16	OK032	LG		[-]	**PF0131**	87×53×17	OK039/ OK041
2.0i	98→11			ATE		[-]	**PF0134**	146×54,7×19,5		LG		[-]	**PF0131**	87×53×17	OK039/ OK041
2.0i	99→11			ATE		[+]	**PF0516**	146×54,7×19,5		LG		[-]	**PF0131**	87×53×17	OK039/ OK041
2.0	01/13→	147	200	ATE		[+]	**PF0516**	146×54,7×19,5		LG		[-]	**PF0131**	87×53×17	OK039/ OK041
2.3i V5	99→11			ATE		[+]	**PF0260**	156,4×74,2×19		LG		[-]	**PF0131**	87×53×17	OK039/ OK041
2.3i V5	99→11			ATE		[+]	**PF0261**	156,4×74,2×19		LG		[-]	**PF0131**	87×53×17	OK039/ OK041
3.2 RSi	00→11			ATE		[+]	**PF0136**	156,4×74,2×19		LG		[-]	**PF0131**	87×53×17	OK039/ OK041
New Beetle Cabriolet (1Y7)															
1.4	01/03→	55	75	ATE		[+]	**PF0516**	146×54,7×19,5		LG		[-]	**PF0131**	87×53×17	OK039/ OK041
1.6	01/03→	75	102	ATE		[+]	**PF0516**	146×54,7×19,5		LG		[-]	**PF0131**	87×53×17	OK039/ OK041
1.8 T	01/03→	110	150	ATE		[+]	**PF0516**	146×54,7×19,5		LG		[-]	**PF0131**	87×53×17	OK039/ OK041
1.9 TDI	06/03→	74	100	ATE		[+]	**PF0516**	146×54,7×19,5		LG		[-]	**PF0131**	87×53×17	OK039/ OK041
1.9 TDI	07/05→	77	105	ATE		[+]	**PF0516**	146×54,7×19,5		LG		[-]	**PF0131**	87×53×17	OK039/ OK041
2.0	09/02→	85	115	ATE		[+]	**PF0516**	146×54,7×19,5		LG		[-]	**PF0131**	87×53×17	OK039/ OK041
2.5	07/05→	110	150	ATE		[+]	**PF0516**	146×54,7×19,5		LG		[-]	**PF0131**	87×53×17	OK039/ OK041
Passat I															
1.3 - Variant	82→89			KH		[-]	**PF0392**	138×49×19,5							
1.6	96→									LG		[-]	**PF0144**	87×53×15	OK039
1.6	79→89			KH		[-]	**PF0392**	138×49×19,5							
1.6i	79→89			KH		[-]	**PF0392**	138×49×19,5							
1.6 D	79→89			KH		[-]	**PF0392**	138×49×19,5							
1.6 TD	79→89			KH		[-]	**PF0392**	138×49×19,5							

		KW	CV	SiS	i	W.i.	MAGNETI MARELLI	W×H×Th (mm)	Extra kit [Opt]	SiS	i	W.i.	MAGNETI MARELLI	W×H×Th (mm)	Extra kit [Opt]
VOLKSWAGEN															
Passat I															
1.6	88→96									LG		[-]	**PF0144**	87×53×15	OK039
1.6	88→96									LG		[-]	**PF0144**	87×53×15	OK039
1.6	88→96									LG		[-]	**PF0144**	87×53×15	OK039
1.6i - Variant	78→79			KH		[-]	**PF0394**	138×49×15							
1.8	82→88			KH		[-]	**PF0392**	138×49×19,5							
1.8 20V	96→									LG		[-]	**PF0144**	87×53×15	OK039
1.8i 16V GT	89→			LG		[-]	**PF0806**	119×69,7×16	OK030	LG		[-]	**PF0144**	87×53×15	OK039
1.8i 16V GT Variant	89→			LG		[-]	**PF0806**	119×69,7×16	OK030	LG		[-]	**PF0144**	87×53×15	OK039
1.8i Syncro G60	88→89									LG		[-]	**PF0144**	87×53×15	OK039
1.8i Syncro G60 Variant	88→89									LG		[-]	**PF0144**	87×53×15	OK039
1.8i Syncro G60 GT	89→									LG		[-]	**PF0144**	87×53×15	OK039
1.8i Syncro G60 GT Variant	89→									LG		[-]	**PF0144**	87×53×15	OK039
1.8i Variant Syncro	88→89			LG		[-]	**PF0806**	119×69,7×16	OK030	LG		[-]	**PF0144**	87×53×15	OK039
1.8i 16V GT	88→89			LG		[-]	**PF0806**	119×69,7×16	OK030	LG		[-]	**PF0144**	87×53×15	OK039
1.8i 16V GT Variant	88→89			LG		[-]	**PF0806**	119×69,7×16	OK030	LG		[-]	**PF0144**	87×53×15	OK039
1.9 TD TDI	96→			ATE		[-]	**PF0260**	156,4×74,2×19		LG		[-]	**PF0144**	87×53×15	OK039
2.0	83→89			KH		[-]	**PF0394**	138×49×15							
2.0 Variant	83→89			KH		[-]	**PF0394**	138×49×15							
2.0i	83→89			KH		[-]	**PF0394**	138×49×15							
2.0i GT	83→89			KH		[-]	**PF0394**	138×49×15							
2.0i Variant	83→89			KH		[-]	**PF0394**	138×49×15							
2.0i Variant GT	83→89			KH		[-]	**PF0394**	138×49×15							
2.0i GT	89→			LG		[-]	**PF0806**	119×69,7×16	OK030	LG		[-]	**PF0144**	87×53×15	OK039
2.0i Variant	89→			LG		[-]	**PF0806**	119×69,7×16	OK030	LG		[-]	**PF0144**	87×53×15	OK039
2.0i Syncro	89→			LG		[-]	**PF0806**	119×69,7×16	OK030	LG		[-]	**PF0144**	87×53×15	OK039
2.0i	86→89			LG		[-]	**PF0806**	119×69,7×16	OK030	LG		[-]	**PF0144**	87×53×15	OK039
2.0i Variant Syncro	86→89			LG		[-]	**PF0806**	119×69,7×16	OK030	LG		[-]	**PF0144**	87×53×15	OK039
2.0i 4WD	86→89			LG		[-]	**PF0806**	119×69,7×16	OK030	LG		[-]	**PF0144**	87×53×15	OK039
2.0i 16V GT Variant	88→89			LG		[-]	**PF0806**	119×69,7×16	OK030	LG		[-]	**PF0144**	87×53×15	OK039
2.0i 16V GT / Variant	89→93			LG		[-]	**PF0806**	119×69,7×16	OK030	LG		[-]	**PF0144**	87×53×15	OK039
2.0i 16V GT / Variant	93→			ATE		[-]	**PF0260**	156,4×74,2×19		LG		[-]	**PF0144**	87×53×15	OK039

		KW	CV	SiS	i	W.i.	MAGNETI MARELLI	W×H×Th (mm)	Extra kit [Opt]	SiS	i	W.i.	MAGNETI MARELLI	W×H×Th (mm)	Extra kit [Opt]
VOLKSWAGEN															
Passat I															
2.2i	86 → 89			LG		[-]	**PF0806**	119×69,7×16	OK030	LG		[-]	**PF0144**	87×53×15	OK039
2.8i VR6 - GT /Variant	93 →			ATE		[-]	**PF0260**	156,4×74,2×19		LG		[-]	**PF0144**	87×53×15	OK039
Passat II (3B_)															
1.6i 16V / Variant	96 → 05			LG		[-]	**PF0145**	119×69,5×19,4	OK032	LG		[-]	**PF0144**	87×53×15	OK039
1.6i / Variant	96 → 05			LG		[+]	**PF0138**	119×69,5×19,5	OK032	LG		[-]	**PF0144**	87×53×15	OK039
1.6i	10/00 → 05			ATE		[+]	**PF0143**	156,4×74,2×19		LG		[-]	**PF0131**	87×53×17	OK039/ OK041
1.6i	11/00 → 05	75		ATE		[+]	**PF0142**	156,4×74,2×19,5		LG		[-]	**PF0131**	87×53×17	OK039/ OK041
1.8i 16V / Variant	96 → 05	92		LG		[-]	**PF0145**	119×69,5×19,4	OK032	LG		[-]	**PF0144**	87×53×15	OK039
1.8i T.	10/96 → 06/98			ATE		[-]	**PF0146**	156,4×74,2×19		LG		[-]	**PF0131**	87×53×17	OK039/ OK041
1.8i 20V / Variant	96 → 05	92		LG		[+]	**PF0138**	119×69,5×19,5	OK032	LG		[-]	**PF0144**	87×53×15	OK039
1.8i 20V / Variant	96 → 05	110		ATE		[-]	**PF0260**	156,4×74,2×19		LG		[-]	**PF0131**	87×53×17	OK039/ OK041
1.8i 20V T. / Variant	96 → 05	110		ATE		[-]	**PF0260**	156,4×74,2×19		LG		[-]	**PF0131**	87×53×17	OK039/ OK041
1.8i T.	07/98 → 05			ATE		[+]	**PF0143**	156,4×74,2×19		LG		[-]	**PF0131**	87×53×17	OK039/ OK041
1.8i T.	11/00 → 05	110		ATE		[+]	**PF0142**	156,4×74,2×19,5		LG		[-]	**PF0131**	87×53×17	OK039/ OK041
1.9 TDI / Variant	96 → 05	66		LG		[-]	**PF0145**	119×69,5×19,4	OK032	LG		[-]	**PF0144**	87×53×15	OK039
1.9 TDI / Variant	96 → 05	66		LG		[+]	**PF0138**	119×69,5×19,5	OK032	LG		[-]	**PF0144**	87×53×15	OK039
1.9 TDI / Variant	96 → 05	84		ATE		[+]	**PF0130**	156,4×74,2×19		LG		[-]	**PF0131**	87×53×17	OK039/ OK041
1.9 TDI / Variant	96 → 05	84		ATE		[-]	**PF0260**	156,4×74,2×19		LG		[-]	**PF0131**	87×53×17	OK039/ OK041
1.9 TDI	10/96 → 06/98		110	ATE		[-]	**PF0146**	156,4×74,2×19		LG		[-]	**PF0131**	87×53×17	OK039/ OK041
1.9 TDI	10/96 → 06/98		115	ATE		[-]	**PF0146**	156,4×74,2×19		LG		[-]	**PF0131**	87×53×17	OK039/ OK041
1.9i TDI	07/98 → 05			ATE		[+]	**PF0143**	156,4×74,2×19		LG		[-]	**PF0131**	87×53×17	OK039/ OK041
1.9 TDI Syncro / Variant	96 → 00	84		ATE		[+]	**PF0261**	156,4×74,2×19		LG		[-]	**PF0131**	87×53×17	OK039/ OK041

		KW	CV	SiS	i	W.i.	MAGNETI MARELLI	W×H×Th (mm)	Extra kit [Opt]	SiS	i	W.i.	MAGNETI MARELLI	W×H×Th (mm)	Extra kit [Opt]
VOLKSWAGEN															
Passat II (3B_)															
1.9 TDI Syncro / Variant	00→05	84		ATE		[+]	**PF0136**	156,4×74,2×19		LG		[-]	**PF0131**	87×53×17	OK039/ OK041
1.9 TDI	11/00→05	75		ATE		[+]	**PF0142**	156,4×74,2×19,5		LG		[-]	**PF0131**	87×53×17	OK039/ OK041
2.0i	07/98→05			ATE		[+]	**PF0143**	156,4×74,2×19		LG		[-]	**PF0131**	87×53×17	OK039/ OK041
2.0i	11/00→05	86		ATE		[+]	**PF0142**	156,4×74,2×19,5		LG		[-]	**PF0131**	87×53×17	OK039/ OK041
2.0i 4 Motion	11/00→05			ATE		[+]	**PF0142**	156,4×74,2×19,5		LG		[-]	**PF0131**	87×53×17	OK039/ OK041
2.3 V5 / Variant	96→00	110		ATE		[+]	**PF0261**	156,4×74,2×19		LG		[-]	**PF0131**	87×53×17	OK039/ OK041
2.3i V5	07/98→05			ATE		[+]	**PF0143**	156,4×74,2×19		LG		[-]	**PF0131**	87×53×17	OK039/ OK041
2.3 V5 / Variant	00→05	110		ATE		[+]	**PF0136**	156,4×74,2×19		LG		[-]	**PF0131**	87×53×17	OK039/ OK041
2.3i V5	11/00→05	125		ATE		[+]	**PF0142**	156,4×74,2×19,5		LG		[-]	**PF0131**	87×53×17	OK039/ OK041
2.5 TDI	07/98→05			ATE		[+]	**PF0143**	156,4×74,2×19		LG		[-]	**PF0131**	87×53×17	OK039/ OK041
2.5 TDI	11/00→05			ATE		[+]	**PF0142**	156,4×74,2×19,5		LG		[-]	**PF0131**	87×53×17	OK039/ OK041
2.8 / Variant	96→05	142		ATE		[+]	**PF0130**	156,4×74,2×19		LG		[-]	**PF0131**	87×53×17	OK039/ OK041
2.8 Syncto / Variant	96→05	142		ATE		[+]	**PF0130**	156,4×74,2×19		LG		[-]	**PF0131**	87×53×17	OK039/ OK041
2.8 / Variant	96→05	142		ATE		[-]	**PF0260**	156,4×74,2×19		LG		[-]	**PF0131**	87×53×17	OK039/ OK041
2.8 Syncto / Variant	96→05	142		ATE		[-]	**PF0260**	156,4×74,2×19		LG		[-]	**PF0131**	87×53×17	OK039/ OK041
2.8 VR6	93→96			ATE		[-]	**PF0137**	156,4×74,2×19		LG		[-]	**PF0131**	87×53×17	OK039/ OK041
2.8i V6	07/98→05			ATE		[+]	**PF0143**	156,4×74,2×19		LG		[-]	**PF0131**	87×53×17	OK039/ OK041
2.8i	11/00→05	142		ATE		[+]	**PF0142**	156,4×74,2×19,5		LG		[-]	**PF0131**	87×53×17	OK039/ OK041
Passat Berlina III (3C2_)															
1.6 16V	06/05→			ATE		[+]	**PF0135**	155,1×66×20,1		LG		[-]	**PF0601**	105,5×56×16,7	OK039/ OK085
1.6 16V	06/05→			ATE		[+]	**PF0135**	155,1×66×20,1		LG	+HB el.	[-]	**PF0601**	105,5×56×16,7	OK039/ OK086
1.6 16V Fsi	06/05→			ATE		[+]	**PF0135**	155,1×66×20,1		LG		[-]	**PF0601**	105,5×56×16,7	OK039/ OK085

MAGNETI MARELLI

		KW	CV													
				SiS	i	W.i.	MAGNETI MARELLI	W×H×Th (mm)	Extra kit [Opt]	SiS	i	W.i.	MAGNETI MARELLI	W×H×Th (mm)	Extra kit [Opt]
VOLKSWAGEN															
Passat Berlina III (3C2_)															
1.6 16V Fsi	06/05→			ATE		[+]	**PF0135**	155,1×66×20,1		LG	+HB el.	[-]	**PF0601**	105,5×56×16,7	OK039/ OK086
1.9 TDI	06/05→			ATE		[+]	**PF0135**	155,1×66×20,1		LG		[-]	**PF0601**	105,5×56×16,7	OK039/ OK085
1.9 TDI	06/05→			ATE		[+]	**PF0135**	155,1×66×20,1		LG	+HB el.	[-]	**PF0601**	105,5×56×16,7	OK039/ OK086
2.0 16V TDI	06/05→			ATE		[+]	**PF0135**	155,1×66×20,1		LG		[-]	**PF0601**	105,5×56×16,7	OK039/ OK085
2.0 16V TDI	06/05→			ATE		[+]	**PF0135**	155,1×66×20,1		LG	+HB el.	[-]	**PF0601**	105,5×56×16,7	OK039/ OK086
2.0 16V TDI	06/05→			ATE		[+]	**PF0135**	155,1×66×20,1		LG		[-]	**PF0601**	105,5×56×16,7	OK039/ OK085
2.0 16V TDI	06/05→			ATE		[+]	**PF0135**	155,1×66×20,1		LG	+HB el.	[-]	**PF0601**	105,5×56×16,7	OK039/ OK086
2.0 16V Fsi	06/05→			ATE		[+]	**PF0135**	155,1×66×20,1		LG		[-]	**PF0601**	105,5×56×16,7	OK039/ OK085
2.0 16V Fsi	06/05→			ATE		[+]	**PF0135**	155,1×66×20,1		LG	+HB el.	[-]	**PF0601**	105,5×56×16,7	OK039/ OK086
Passat SW III (1K-3C5_)															
1.6	08/05→			ATE	1K	[+]	**PF0605**	156,5×72,9×20		LG		[-]	**PF0601**	105,5×56×16,7	OK039/ OK085
1.6	08/05→			ATE	3C	[+]	**PF0135**	155,1×66×20,1		LG	+HB el.	[-]	**PF0601**	105,5×56×16,7	OK039/ OK086
1.6 16V Fsi	08/05→			ATE	1K	[+]	**PF0605**	156,5×72,9×20		LG		[-]	**PF0601**	105,5×56×16,7	OK039/ OK085
1.6 16V Fsi	08/05→			ATE	3C	[+]	**PF0135**	155,1×66×20,1		LG	+HB el.	[-]	**PF0601**	105,5×56×16,7	OK039/ OK086
1.9 TDI	08/05→			ATE	1K	[+]	**PF0605**	156,5×72,9×20		LG		[-]	**PF0601**	105,5×56×16,7	OK039/ OK085
1.9 TDI	08/05→			ATE	3C	[+]	**PF0135**	155,1×66×20,1		LG	+HB el.	[-]	**PF0601**	105,5×56×16,7	OK039/ OK086
2.0 Fsi	08/05→		150	ATE	1K	[+]	**PF0605**	156,5×72,9×20		LG		[-]	**PF0601**	105,5×56×16,7	OK039/ OK085
2.0 Fsi	08/05→		150	ATE	3C	[+]	**PF0135**	155,1×66×20,1		LG	+HB el.	[-]	**PF0601**	105,5×56×16,7	OK039/ OK086
2.0 TDI	08/05→		122	ATE	1K	[+]	**PF0605**	156,5×72,9×20		LG		[-]	**PF0601**	105,5×56×16,7	OK039/ OK085
2.0 TDI	08/05→		122	ATE	3C	[+]	**PF0135**	155,1×66×20,1		LG	+HB el.	[-]	**PF0601**	105,5×56×16,7	OK039/ OK086
2.0 TDI	08/05→		136	ATE	1K	[+]	**PF0605**	156,5×72,9×20		LG		[-]	**PF0601**	105,5×56×16,7	OK039/ OK085
2.0 TDI	08/05→		136	ATE	3C	[+]	**PF0135**	155,1×66×20,1		LG	+HB el.	[-]	**PF0601**	105,5×56×16,7	OK039/ OK086

		KW	CV	SiS	i	W.i.	MAGNETI MARELLI	W×H×Th (mm)	Extra kit [Opt]	SiS	i	W.i.	MAGNETI MARELLI	W×H×Th (mm)	Extra kit [Opt]
VOLKSWAGEN															
Passat SW III (1K-3C5_)															
2.0 TDI	08/05→		140	ATE	1K	[+]	**PF0605**	156,5×72,9×20		LG		[-]	**PF0601**	105,5×56×16,7	OK039/ OK085
2.0 TDI	08/05→		140	ATE	3C	[+]	**PF0135**	155,1×66×20,1		LG	+HB el.	[-]	**PF0601**	105,5×56×16,7	OK039/ OK086
Passat AllTrack (365)															
1.8 TSI	01/12→	112	152	ATE	1ZM	[+]	**PF0135**	155,1×66×20,1		LG	1KW	[-]	**PF0658**	105,3×56,3×17	OK039
1.8 TSI	01/12→	112	152	ATE	1ZG	[+]	**PF0657**	155,2×66×20,1		LG	2EA	[-]	**PF0601**	105,5×56×16,7	OK039/ OK085
1.8 TSI	01/12→	118	160	ATE	1ZM	[+]	**PF0135**	155,1×66×20,1		LG	1KW	[-]	**PF0658**	105,3×56,3×17	OK039
1.8 TSI	01/12→	118	160	ATE	1ZG	[+]	**PF0657**	155,2×66×20,1		LG	2EA	[-]	**PF0601**	105,5×56×16,7	OK039/ OK085
2.0 TDI	01/12→	103	140	ATE	1ZM	[+]	**PF0135**	155,1×66×20,1		LG	1KW	[-]	**PF0658**	105,3×56,3×17	OK039
2.0 TDI	01/12→	103	140	ATE	1ZG	[+]	**PF0657**	155,2×66×20,1		LG	2EA	[-]	**PF0601**	105,5×56×16,7	OK039/ OK085
2.0 TDI 4x4	01/12→	103	140	ATE	1ZM	[+]	**PF0135**	155,1×66×20,1		LG	1KW	[-]	**PF0658**	105,3×56,3×17	OK039
2.0 TDI 4x4	01/12→	103	140	ATE	1ZG	[+]	**PF0657**	155,2×66×20,1		LG	2EA	[-]	**PF0601**	105,5×56×16,7	OK039/ OK085
2.0 TDI	01/12→	125	170	ATE	1ZM	[+]	**PF0135**	155,1×66×20,1		LG	1KW	[-]	**PF0658**	105,3×56,3×17	OK039
2.0 TDI	01/12→	125	170	ATE	1ZG	[+]	**PF0657**	155,2×66×20,1		LG	2EA	[-]	**PF0601**	105,5×56×16,7	OK039/ OK085
2.0 TDI 4x4	01/13→	130	177	ATE	1ZM	[+]	**PF0135**	155,1×66×20,1		LG	1KW	[-]	**PF0658**	105,3×56,3×17	OK039
2.0 TDI 4x4	01/13→	130	177	ATE	1ZG	[+]	**PF0657**	155,2×66×20,1		LG	2EA	[-]	**PF0601**	105,5×56×16,7	OK039/ OK085
1.4 TSI 4x4	11/12→	118	160	ATE	1ZM	[+]	**PF0135**	155,1×66×20,1		LG	1KW	[-]	**PF0658**	105,3×56,3×17	OK039
1.4 TSI 4x4	11/12→	118	160	ATE	1ZG	[+]	**PF0657**	155,2×66×20,1		LG	2EA	[-]	**PF0601**	105,5×56×16,7	OK039/ OK085
Passat Berlina (362)															
1.4 TSI	08/10→	90	122	ATE		[+]	**PF0657**	155,2×66×20,1		LG		[-]	**PF0601**	105,5×56×16,7	OK039/ OK085
1.4 TSI	08/10→	90	122	ATE		[+]	**PF0657**	155,2×66×20,1		LG	+HB el.	[-]	**PF0601**	105,5×56×16,7	OK039/ OK086
1.4 TSI EcoFuel	08/10→	110	150	ATE		[+]	**PF0657**	155,2×66×20,1		LG		[-]	**PF0601**	105,5×56×16,7	OK039/ OK085
1.4 TSI EcoFuel	08/10→	110	150	ATE		[+]	**PF0657**	155,2×66×20,1		LG	+HB el.	[-]	**PF0601**	105,5×56×16,7	OK039/ OK086
1.4 TSI MultiFuel	11/10→	118	160	ATE		[+]	**PF0657**	155,2×66×20,1		LG		[-]	**PF0601**	105,5×56×16,7	OK039/ OK085

		KW	CV	SiS	i	W.i.	MAGNETI MARELLI	W×H×Th (mm)	Extra kit [Opt]	SiS	i	W.i.	MAGNETI MARELLI	W×H×Th (mm)	Extra kit [Opt]
VOLKSWAGEN															
Passat Berlina (362)															
1.4 TSI MultiFuel	11/10→	118	160	ATE		[+]	**PF0657**	155,2×66×20,1		LG	+HB el.	[-]	**PF0601**	105,5×56×16,7	OK039/ OK086
1.6 TDI	08/10→	77	105	ATE		[+]	**PF0657**	155,2×66×20,1		LG		[-]	**PF0601**	105,5×56×16,7	OK039/ OK085
1.6 TDI	08/10→	77	105	ATE		[+]	**PF0657**	155,2×66×20,1		LG	+HB el.	[-]	**PF0601**	105,5×56×16,7	OK039/ OK086
1.8 TSI	08/10→	118	160	ATE		[+]	**PF0657**	155,2×66×20,1		LG		[-]	**PF0601**	105,5×56×16,7	OK039/ OK085
1.8 TSI	08/10→	118	160	ATE		[+]	**PF0657**	155,2×66×20,1		LG	+HB el.	[-]	**PF0601**	105,5×56×16,7	OK039/ OK086
2.0 TDI	08/10→	103	140	ATE		[+]	**PF0657**	155,2×66×20,1		LG		[-]	**PF0601**	105,5×56×16,7	OK039/ OK085
2.0 TDI	08/10→	103	140	ATE		[+]	**PF0657**	155,2×66×20,1		LG	+HB el.	[-]	**PF0601**	105,5×56×16,7	OK039/ OK086
2.0 TDI	08/10→	125	170	ATE		[+]	**PF0657**	155,2×66×20,1		LG		[-]	**PF0601**	105,5×56×16,7	OK039/ OK085
2.0 TDI	08/10→	125	170	ATE		[+]	**PF0657**	155,2×66×20,1		LG	+HB el.	[-]	**PF0601**	105,5×56×16,7	OK039/ OK086
2.0 TDI	08/10→	100	136	ATE		[+]	**PF0657**	155,2×66×20,1		LG		[-]	**PF0601**	105,5×56×16,7	OK039/ OK085
2.0 TDI	08/10→	100	136	ATE		[+]	**PF0657**	155,2×66×20,1		LG	+HB el.	[-]	**PF0601**	105,5×56×16,7	OK039/ OK086
2.0 TDI 4motion	08/10→	103	140	ATE		[+]	**PF0657**	155,2×66×20,1		LG		[-]	**PF0601**	105,5×56×16,7	OK039/ OK085
2.0 TDI 4motion	08/10→	103	140	ATE		[+]	**PF0657**	155,2×66×20,1		LG	+HB el.	[-]	**PF0601**	105,5×56×16,7	OK039/ OK086
2.0 TDI 4motion	08/10→	125	170	ATE		[+]	**PF0657**	155,2×66×20,1		LG		[-]	**PF0601**	105,5×56×16,7	OK039/ OK085
2.0 TDI 4motion	08/10→	125	170	ATE		[+]	**PF0657**	155,2×66×20,1		LG	+HB el.	[-]	**PF0601**	105,5×56×16,7	OK039/ OK086
2.0 TSI	11/10→	155	210	ATE		[+]	**PF0657**	155,2×66×20,1		LG		[-]	**PF0601**	105,5×56×16,7	OK039/ OK085
2.0 TSI	11/10→	155	210	ATE		[+]	**PF0657**	155,2×66×20,1		LG	+HB el.	[-]	**PF0601**	105,5×56×16,7	OK039/ OK086
3.6 FSI 4motion	01/11→	220	300	ATE		[+]	**PF0657**	155,2×66×20,1		LG		[-]	**PF0601**	105,5×56×16,7	OK039/ OK085
3.6 FSI 4motion	01/11→	220	300	ATE		[+]	**PF0657**	155,2×66×20,1		LG	+HB el.	[-]	**PF0601**	105,5×56×16,7	OK039/ OK086
Passat SW (365)															
1.4 TSI EcoFuel	08/10→	110	150	ATE		[+]	**PF0657**	155,2×66×20,1		LG		[-]	**PF0601**	105,5×56×16,7	OK039/ OK085
1.4 TSI EcoFuel	08/10→	110	150	ATE		[+]	**PF0657**	155,2×66×20,1		LG	+HB el.	[-]	**PF0601**	105,5×56×16,7	OK039/ OK086

		KW	CV	SiS	i	W.i.	MAGNETI MARELLI	W×H×Th (mm)	Extra kit [Opt]	SiS	i	W.i.	MAGNETI MARELLI	W×H×Th (mm)	Extra kit [Opt]
VOLKSWAGEN															
Passat SW (365)															
1.4 TSI MultiFuel	11/10→	118	160	ATE		[+]	**PF0657**	155,2×66×20,1		LG		[-]	**PF0601**	105,5×56×16,7	OK039/ OK085
1.4 TSI MultiFuel	11/10→	118	160	ATE		[+]	**PF0657**	155,2×66×20,1		LG	+HB el.	[-]	**PF0601**	105,5×56×16,7	OK039/ OK086
1.4 TSI	11/12→	118	160	ATE		[+]	**PF0657**	155,2×66×20,1		LG		[-]	**PF0601**	105,5×56×16,7	OK039/ OK085
1.4 TSI	11/12→	118	160	ATE		[+]	**PF0657**	155,2×66×20,1		LG	+HB el.	[-]	**PF0601**	105,5×56×16,7	OK039/ OK086
1.6 TDI	08/10→	77	105	ATE		[+]	**PF0657**	155,2×66×20,1		LG		[-]	**PF0601**	105,5×56×16,7	OK039/ OK085
1.6 TDI	08/10→	77	105	ATE		[+]	**PF0657**	155,2×66×20,1		LG	+HB el.	[-]	**PF0601**	105,5×56×16,7	OK039/ OK086
1.8 TSI	08/10→	118	160	ATE		[+]	**PF0657**	155,2×66×20,1		LG		[-]	**PF0601**	105,5×56×16,7	OK039/ OK085
1.8 TSI	08/10→	118	160	ATE		[+]	**PF0657**	155,2×66×20,1		LG	+HB el.	[-]	**PF0601**	105,5×56×16,7	OK039/ OK086
2.0 TDI	08/10→	103	140	ATE		[+]	**PF0657**	155,2×66×20,1		LG		[-]	**PF0601**	105,5×56×16,7	OK039/ OK085
2.0 TDI	08/10→	103	140	ATE		[+]	**PF0657**	155,2×66×20,1		LG	+HB el.	[-]	**PF0601**	105,5×56×16,7	OK039/ OK086
2.0 TDI	08/10→	125	170	ATE		[+]	**PF0657**	155,2×66×20,1		LG		[-]	**PF0601**	105,5×56×16,7	OK039/ OK085
2.0 TDI	08/10→	125	170	ATE		[+]	**PF0657**	155,2×66×20,1		LG	+HB el.	[-]	**PF0601**	105,5×56×16,7	OK039/ OK086
2.0 TDI	08/10→	100	136	ATE		[+]	**PF0657**	155,2×66×20,1		LG		[-]	**PF0601**	105,5×56×16,7	OK039/ OK085
2.0 TDI	08/10→	100	136	ATE		[+]	**PF0657**	155,2×66×20,1		LG	+HB el.	[-]	**PF0601**	105,5×56×16,7	OK039/ OK086
2.0 TDI 4x4	01/13→	130	177	ATE		[+]	**PF0657**	155,2×66×20,1		LG		[-]	**PF0601**	105,5×56×16,7	OK039/ OK085
2.0 TDI 4x4	01/13→	130	177	ATE		[+]	**PF0657**	155,2×66×20,1		LG	+HB el.	[-]	**PF0601**	105,5×56×16,7	OK039/ OK086
2.0 TDI	12/12→	130	177	ATE		[+]	**PF0657**	155,2×66×20,1		LG		[-]	**PF0601**	105,5×56×16,7	OK039/ OK085
2.0 TDI	12/12→	130	177	ATE		[+]	**PF0657**	155,2×66×20,1		LG	+HB el.	[-]	**PF0601**	105,5×56×16,7	OK039/ OK086
2.0 TDI 4x4	08/10→	103	140	ATE		[+]	**PF0657**	155,2×66×20,1		LG		[-]	**PF0601**	105,5×56×16,7	OK039/ OK085
2.0 TDI 4x4	08/10→	103	140	ATE		[+]	**PF0657**	155,2×66×20,1		LG	+HB el.	[-]	**PF0601**	105,5×56×16,7	OK039/ OK086
2.0 TDI 4x4	08/10→	125	170	ATE		[+]	**PF0657**	155,2×66×20,1		LG		[-]	**PF0601**	105,5×56×16,7	OK039/ OK085
2.0 TDI 4x4	08/10→	125	170	ATE		[+]	**PF0657**	155,2×66×20,1		LG	+HB el.	[-]	**PF0601**	105,5×56×16,7	OK039/ OK086

		KW	CV	SiS	i	W.i.	MAGNETI MARELLI	W×H×Th (mm)	Extra kit [Opt]	SiS	i	W.i.	MAGNETI MARELLI	W×H×Th (mm)	Extra kit [Opt]
VOLKSWAGEN															
Passat SW (365)															
2.0 TSI	11/10→	155	210	ATE		[+]	**PF0657**	155,2×66×20,1		LG		[-]	**PF0601**	105,5×56×16,7	OK039/ OK085
2.0 TSI	11/10→	155	210	ATE		[+]	**PF0657**	155,2×66×20,1		LG	+HB el.	[-]	**PF0601**	105,5×56×16,7	OK039/ OK086
3.6 FSI 4x4	01/11→	220	300	ATE		[+]	**PF0657**	155,2×66×20,1		LG		[-]	**PF0601**	105,5×56×16,7	OK039/ OK085
3.6 FSI 4x4	01/11→	220	300	ATE		[+]	**PF0657**	155,2×66×20,1		LG	+HB el.	[-]	**PF0601**	105,5×56×16,7	OK039/ OK086
Passat CC (357)															
1.4 TSI MultiFuel	01/11→	118	160	ATE		[+]	**PF0135**	155,1×66×20,1		LG		[-]	**PF0658**	105,3×56,3×17	OK039/ OK085
1.4 TSI MultiFuel	01/11→	118	160	ATE	1LK	[+]	**PF0606**	156,5×72,9×20		LG	+HB el.	[-]	**PF0658**	105,3×56,3×17	OK039/ OK086
1.8 TSI	11/08→05/10	112	152	ATE		[+]	**PF0135**	155,1×66×20,1		LG		[-]	**PF0658**	105,3×56,3×17	OK039/ OK085
1.8 TSI	11/08→05/10	112	152	ATE	1LK	[+]	**PF0606**	156,5×72,9×20		LG	+HB el.	[-]	**PF0658**	105,3×56,3×17	OK039/ OK086
1.8 TSI	06/08→	118	160	ATE		[+]	**PF0135**	155,1×66×20,1		LG		[-]	**PF0658**	105,3×56,3×17	OK039/ OK085
1.8 TSI	06/08→	118	160	ATE	1LK	[+]	**PF0606**	156,5×72,9×20		LG	+HB el.	[-]	**PF0658**	105,3×56,3×17	OK039/ OK086
2.0 BlueTDI	05/09→	105	143	ATE		[+]	**PF0135**	155,1×66×20,1		LG		[-]	**PF0658**	105,3×56,3×17	OK039/ OK085
2.0 BlueTDI	05/09→	105	143	ATE	1LK	[+]	**PF0606**	156,5×72,9×20		LG	+HB el.	[-]	**PF0658**	105,3×56,3×17	OK039/ OK086
2.0 TDI	05/08→11/08	120	163	ATE		[+]	**PF0135**	155,1×66×20,1		LG		[-]	**PF0658**	105,3×56,3×17	OK039/ OK085
2.0 TDI	05/08→11/08	120	163	ATE	1LK	[+]	**PF0606**	156,5×72,9×20		LG	+HB el.	[-]	**PF0658**	105,3×56,3×17	OK039/ OK086
2.0 TDI	06/08→	103	140	ATE		[+]	**PF0135**	155,1×66×20,1		LG		[-]	**PF0658**	105,3×56,3×17	OK039/ OK085
2.0 TDI	06/08→	103	140	ATE	1LK	[+]	**PF0606**	156,5×72,9×20		LG	+HB el.	[-]	**PF0658**	105,3×56,3×17	OK039/ OK086
2.0 TDI	06/08→	125	170	ATE		[+]	**PF0135**	155,1×66×20,1		LG		[-]	**PF0658**	105,3×56,3×17	OK039/ OK085
2.0 TDI	06/08→	125	170	ATE	1LK	[+]	**PF0606**	156,5×72,9×20		LG	+HB el.	[-]	**PF0658**	105,3×56,3×17	OK039/ OK086
2.0 TDI	06/08→	100	136	ATE		[+]	**PF0135**	155,1×66×20,1		LG		[-]	**PF0658**	105,3×56,3×17	OK039/ OK085
2.0 TDI	06/08→	100	136	ATE	1LK	[+]	**PF0606**	156,5×72,9×20		LG	+HB el.	[-]	**PF0658**	105,3×56,3×17	OK039/ OK086
2.0 TDI 4 Motion	08/09→	103	140	ATE		[+]	**PF0135**	155,1×66×20,1		LG		[-]	**PF0658**	105,3×56,3×17	OK039/ OK085

		KW	CV	SiS	i	W.i.	MAGNETI MARELLI	W×H×Th (mm)	Extra kit [Opt]	SiS	i	W.i.	MAGNETI MARELLI	W×H×Th (mm)	Extra kit [Opt]
VOLKSWAGEN															
Passat CC (357)															
2.0 TDI 4 Motion	08/09→	103	140	ATE	1LK	[+]	**PF0606**	156,5×72,9×20		LG	+HB el.	[-]	**PF0658**	105,3×56,3×17	OK039/ OK086
2.0 TDI 4 Motion	11/09→	125	170	ATE		[+]	**PF0135**	155,1×66×20,1		LG		[-]	**PF0658**	105,3×56,3×17	OK039/ OK085
2.0 TDI 4 Motion	11/09→	125	170	ATE	1LK	[+]	**PF0606**	156,5×72,9×20		LG	+HB el.	[-]	**PF0658**	105,3×56,3×17	OK039/ OK086
2.0 TSI	11/10→	155	211	ATE		[+]	**PF0135**	155,1×66×20,1		LG		[-]	**PF0658**	105,3×56,3×17	OK039/ OK085
2.0 TSI	11/10→	155	211	ATE	1LK	[+]	**PF0606**	156,5×72,9×20		LG	+HB el.	[-]	**PF0658**	105,3×56,3×17	OK039/ OK086
2.0 TSI	06/08→	147	200	ATE		[+]	**PF0135**	155,1×66×20,1		LG		[-]	**PF0658**	105,3×56,3×17	OK039/ OK085
2.0 TSI	06/08→	147	200	ATE	1LK	[+]	**PF0606**	156,5×72,9×20		LG	+HB el.	[-]	**PF0658**	105,3×56,3×17	OK039/ OK086
3.6 4 Motion	06/08→	220	300	ATE		[+]	**PF0135**	155,1×66×20,1		LG		[-]	**PF0658**	105,3×56,3×17	OK039/ OK085
3.6 4 Motion	06/08→	220	300	ATE	1LK	[+]	**PF0606**	156,5×72,9×20		LG	+HB el.	[-]	**PF0658**	105,3×56,3×17	OK039/ OK086
3.6 FSI	06/08→	206	280	ATE		[+]	**PF0135**	155,1×66×20,1		LG		[-]	**PF0658**	105,3×56,3×17	OK039/ OK085
3.6 FSI	06/08→	206	280	ATE	1LK	[+]	**PF0606**	156,5×72,9×20		LG	+HB el.	[-]	**PF0658**	105,3×56,3×17	OK039/ OK086
3.6 FSI 4 Motion	06/08→	206	280							LG		[-]	**PF0658**	105,3×56,3×17	OK039/ OK085
3.6 FSI 4 Motion	06/08→	206	280							LG	+HB el.	[-]	**PF0658**	105,3×56,3×17	OK039/ OK086
Phaeton (3D2)															
3.0 V6 TDI 4motion	09/04→	165	224							LG		[+]	**PF0603**	116,2×59×17,5	OK039/ OK091
3.0 V6 TDI 4motion	09/04→	165	224							LG		[+]	**PF0603**	116,2×59×17,5	OK039/ OK091
3.0 V6 TDI 4motion	11/08→	176	240							LG		[+]	**PF0603**	116,2×59×17,5	OK039/ OK091
3.0 V6 TDI 4motion	11/08→	176	240							LG		[+]	**PF0603**	116,2×59×17,5	OK039/ OK091
3.0 V6 TDI 4motion	06/07→	171	233							LG		[+]	**PF0603**	116,2×59×17,5	OK039/ OK091
3.0 V6 TDI 4motion	06/07→	171	233							LG		[+]	**PF0603**	116,2×59×17,5	OK039/ OK091
3.2 V6	04/02→	177	241							LG		[+]	**PF0603**	116,2×59×17,5	OK039/ OK091
3.2 V6	04/02→	177	241							LG		[+]	**PF0603**	116,2×59×17,5	OK039/ OK091

		KW	CV												
				SiS	i	W.i.	MAGNETI MARELLI	W×H×Th (mm)	Extra kit [Opt]	SiS	i	W.i.	MAGNETI MARELLI	W×H×Th (mm)	Extra kit [Opt]
VOLKSWAGEN															
Phaeton (3D2)															
3.2 V6 4motion	02/04 →	177	241							LG		[+]	**PF0603**	116,2×59×17,5	OK039/ OK091
3.2 V6 4motion	02/04 →	177	241							LG		[+]	**PF0603**	116,2×59×17,5	OK039/ OK091
3.6 V6 4motion	11/08 →	206	280							LG		[+]	**PF0603**	116,2×59×17,5	OK039/ OK091
3.6 V6 4motion	11/08 →	206	280							LG		[+]	**PF0603**	116,2×59×17,5	OK039/ OK091
4.2 V8 4motion	05/03 →	246	335							LG		[+]	**PF0603**	116,2×59×17,5	OK039/ OK091
4.2 V8 4motion	05/03 →	246	335							LG		[+]	**PF0603**	116,2×59×17,5	OK039/ OK091
5.0 V10 TDI 4motion	11/02 →	230	313							LG		[+]	**PF0603**	116,2×59×17,5	OK039/ OK091
5.0 V10 TDI 4motion	11/02 →	230	313							LG		[+]	**PF0603**	116,2×59×17,5	OK039/ OK091
6.0 W12 4motion	04/02 →	309	420							LG		[+]	**PF0603**	116,2×59×17,5	OK039/ OK091
6.0 W12 4motion	04/02 →	309	420							LG		[+]	**PF0603**	116,2×59×17,5	OK039/ OK091
6.0 W12 4motion	05/05 →	331	450							LG		[+]	**PF0603**	116,2×59×17,5	OK039/ OK091
6.0 W12 4motion	05/05 →	331	450							LG		[+]	**PF0603**	116,2×59×17,5	OK039/ OK091
Polo I															
1.0 /Coupé	84 → 90			KH		[-]	**PF0395**	138×51,2×17,2							
1.1 /Coupé	84 → 90			KH		[-]	**PF0395**	138×51,2×17,2							
1.3 /Coupé	84 → 90			KH		[-]	**PF0395**	138×51,2×17,2							
1.3 GT /Coupé	84 → 90			KH		[-]	**PF0395**	138×51,2×17,2							
1.3i G40 Coupé	86 → 90			KH		[-]	**PF0394**	138×49×15							
Polo II															
1.0 /Coupé	90 → 94			KH		[-]	**PF0395**	138×51,2×17,2							
1.0i /Coupé	90 → 94			KH		[-]	**PF0395**	138×51,2×17,2							
1.3i G40 Coupé	90 → 94			KH		[-]	**PF0394**	138×49×15							
1.3i GT Coupé	90 → 92			KH		[-]	**PF0395**	138×51,2×17,2							
1.4D /Coupé	90 → 94			KH		[-]	**PF0395**	138×51,2×17,2							
Polo III (6N1_6N2)															
1.0i	94 → 03			KH		[-]	**PF0393**	138×49×17,3							
1.0i - X	95 → 03			ATE		[-]	**PF0388**	137,8×49×17							
1.3i	94 → 03			KH		[-]	**PF0393**	138×49×17,3							
1.4i	95 → 03			ATE		[-]	**PF0388**	137,8×49×17							
1.4i	95 → 03			ATE		[-]	**PF0393**	138×49×17,3							

		KW	CV	SiS	i	W.i.	MAGNETI MARELLI	W×H×Th (mm)	Extra kit [Opt]	SiS	i	W.i.	MAGNETI MARELLI	W×H×Th (mm)	Extra kit [Opt]
VOLKSWAGEN															
Polo III (6N1_6N2)															
1.4i 16V	95→03			ATE		[-]	**PF0388**	137,8×49×17							
1.4i 16V	95→03			ATE		[-]	**PF0393**	138×49×17,3							
1.6i	94→03			KH		[-]	**PF0393**	138×49×17,3							
1.6i 16V	94→03			KH		[-]	**PF0393**	138×49×17,3							
1.6 D	94→03			KH		[-]	**PF0393**	138×49×17,3							
1.6i	95→03			ATE		[-]	**PF0388**	137,8×49×17							
1.9 D	95→03			ATE		[-]	**PF0388**	137,8×49×17							
Classic 1.9 D	97→03			ATE		[-]	**PF0391**	137,8×49×15							
Polo III Variant (6KV5)															
1.4i 16V	95→01			ATE		[-]	**PF0391**	137,8×49×15							
1.4i 16V	95→01			LG		[-]	**PF0389**	119×69,5×16	OK032	LG		[-]	**PF0131**	87×53×17	OK039/ OK041
1.6i 16V	95→01			ATE		[-]	**PF0391**	137,8×49×15							
1.6i 16V	95→01			LG		[-]	**PF0389**	119×69,5×16	OK032	LG		[-]	**PF0131**	87×53×17	OK039/ OK041
1.9 TD	95→01			ATE		[-]	**PF0391**	137,8×49×15							
1.9 TD	95→01			LG		[-]	**PF0389**	119×69,5×16	OK032	LG		[-]	**PF0131**	87×53×17	OK039/ OK041
Polo IV (9N)															
1.2	01→03			ATE		[+]	**PF0516**	146×54,7×19,5		LG		[+]	**PF0442**	87×53×17	OK039
1.2	03→			ATE		[+]	**PF0132**	146×54,7×19,5		LG		[-]	**PF0131**	87×53×17	OK039/ OK041
1.2	03→			LG		[+]	**PF0576**	131,5×62,7×18,8	OK033/ OK077	LG		[-]	**PF0131**	87×53×17	OK039/ OK041
1.4 Fsi	01→03			ATE		[+]	**PF0516**	146×54,7×19,5		LG		[+]	**PF0442**	87×53×17	OK039
1.4 Fsi	05/02→			ATE		[+]	**PF0396**	137,8×49×17		LG		[-]	**PF0131**	87×53×17	OK039/ OK041
1.4 Fsi	03→			ATE		[+]	**PF0132**	146×54,7×19,5		LG		[-]	**PF0131**	87×53×17	OK039/ OK041
1.4 Fsi	03→			LG		[+]	**PF0576**	131,5×62,7×18,8	OK033/ OK077	LG		[-]	**PF0131**	87×53×17	OK039/ OK041
1.4 16V	01→03			ATE		[+]	**PF0516**	146×54,7×19,5		LG		[+]	**PF0442**	87×53×17	OK039
1.4 16V	03→			ATE		[+]	**PF0132**	146×54,7×19,5		LG		[-]	**PF0131**	87×53×17	OK039/ OK041
1.4 16V	03→			LG		[+]	**PF0576**	131,5×62,7×18,8	OK033/ OK077	LG		[-]	**PF0131**	87×53×17	OK039/ OK041
1.4 TDI	01→03			ATE		[+]	**PF0516**	146×54,7×19,5		LG		[+]	**PF0442**	87×53×17	OK039
1.4 TDI	10/01→			ATE		[+]	**PF0396**	137,8×49×17		LG		[-]	**PF0131**	87×53×17	OK039/ OK041
1.4 TDI	03→			ATE		[+]	**PF0132**	146×54,7×19,5		LG		[-]	**PF0131**	87×53×17	OK039/ OK041

MAGNETI MARELLI

		KW	CV	SiS	i	W.i.	MAGNETI MARELLI	W×H×Th (mm)	Extra kit [Opt]	SiS	i	W.i.	MAGNETI MARELLI	W×H×Th (mm)	Extra kit [Opt]
VOLKSWAGEN															
Polo IV (9N)															
1.4 TDI	03→			LG		[+]	**PF0576**	131,5×62,7×18,8	OK033/ OK077	LG		[-]	**PF0131**	87×53×17	OK039/ OK041
1.9 Sdi	01→03			ATE		[+]	**PF0516**	146×54,7×19,5		LG		[+]	**PF0442**	87×53×17	OK039
1.9 Sdi	10/01→			ATE		[+]	**PF0396**	137,8×49×17		LG		[-]	**PF0131**	87×53×17	OK039/ OK041
1.9 Sdi	03→			ATE		[+]	**PF0132**	146×54,7×19,5		LG		[-]	**PF0131**	87×53×17	OK039/ OK041
1.9 Sdi	03→			LG		[+]	**PF0576**	131,5×62,7×18,8	OK033/ OK077	LG		[-]	**PF0131**	87×53×17	OK039/ OK041
1.9 TDI	10/01→			ATE		[+]	**PF0396**	137,8×49×17		LG		[-]	**PF0131**	87×53×17	OK039/ OK041
1.9 TDI	01→03			ATE		[+]	**PF0516**	146×54,7×19,5		LG		[+]	**PF0442**	87×53×17	OK039
1.9 TDI	03→			ATE		[+]	**PF0132**	146×54,7×19,5		LG		[-]	**PF0131**	87×53×17	OK039/ OK041
1.9 TDI	03→			LG		[+]	**PF0576**	131,5×62,7×18,8	OK033/ OK077	LG		[-]	**PF0131**	87×53×17	OK039/ OK041
Polo V (6R_6C_)															
1.0	01/14→	44	60	ATE		[+]	**PF0132**	146×54,7×19,5		LG		[-]	**PF0131**	87×53×17	OK039/ OK041
1.0	01/14→	55	75	ATE		[+]	**PF0132**	146×54,7×19,5		LG		[-]	**PF0131**	87×53×17	OK039/ OK041
1.2 TSI	01/14→	81	110	ATE		[+]	**PF0132**	146×54,7×19,5		LG		[-]	**PF0131**	87×53×17	OK039/ OK041
1.2	06/09→			ATE		[-]	**PF0134**	146×54,7×19,5		LG		[-]	**PF0131**	87×53×17	OK039/ OK041
1.2	06/09→			ATE		[+]	**PF0132**	146×54,7×19,5		LG		[-]	**PF0131**	87×53×17	OK039/ OK041
1.2	06/09→			ATE		[+]	**PF0135**	155,1×66×20,1		LG		[-]	**PF0131**	87×53×17	OK039/ OK041
1.2	08/11→	55	75	ATE		[-]	**PF0134**	146×54,7×19,5		LG		[-]	**PF0131**	87×53×17	OK039/ OK041
1.2	08/11→	55	75	ATE		[+]	**PF0132**	146×54,7×19,5		LG		[-]	**PF0131**	87×53×17	OK039/ OK041
1.2	08/11→	55	75	ATE		[+]	**PF0135**	155,1×66×20,1		LG		[-]	**PF0131**	87×53×17	OK039/ OK041
1.2 TD	06/09→			ATE		[-]	**PF0134**	146×54,7×19,5		LG		[-]	**PF0131**	87×53×17	OK039/ OK041
1.2 TD	06/09→			ATE		[+]	**PF0132**	146×54,7×19,5		LG		[-]	**PF0131**	87×53×17	OK039/ OK041
1.2 TD	06/09→			ATE		[+]	**PF0135**	155,1×66×20,1		LG		[-]	**PF0131**	87×53×17	OK039/ OK041

		KW	CV	SiS	i	W.i.	MAGNETI MARELLI	W×H×Th (mm)	Extra kit [Opt]	SiS	i	W.i.	MAGNETI MARELLI	W×H×Th (mm)	Extra kit [Opt]
VOLKSWAGEN															
Polo V (6R_6C_)															
1.4	06/09→			ATE		[-]	**PF0134**	146×54,7×19,5		LG		[-]	**PF0131**	87×53×17	OK039/ OK041
1.4	06/09→			ATE		[+]	**PF0132**	146×54,7×19,5		LG		[-]	**PF0131**	87×53×17	OK039/ OK041
1.4	06/09→			ATE		[+]	**PF0135**	155,1×66×20,1		LG		[-]	**PF0131**	87×53×17	OK039/ OK041
1.4 TDI	03/14→	55	75	ATE		[+]	**PF0132**	146×54,7×19,5		LG		[-]	**PF0131**	87×53×17	OK039/ OK041
1.4 TDI	03/14→	55	75	ATE		[+]	**PF0135**	155,1×66×20,1		LG		[-]	**PF0131**	87×53×17	OK039/ OK041
1.4 TDI	02/14→	66	90	ATE		[+]	**PF0132**	146×54,7×19,5		LG		[-]	**PF0131**	87×53×17	OK039/ OK041
1.4 TDI	02/14→	66	90	ATE		[+]	**PF0135**	155,1×66×20,1		LG		[-]	**PF0131**	87×53×17	OK039/ OK041
1.4 TDI	05/14→	77	105	ATE		[+]	**PF0132**	146×54,7×19,5		LG		[-]	**PF0131**	87×53×17	OK039/ OK041
1.4 TDI	05/14→	77	105	ATE		[+]	**PF0135**	155,1×66×20,1		LG		[-]	**PF0131**	87×53×17	OK039/ OK041
1.4 TSI	05/14→	110	150	ATE		[+]	**PF0132**	146×54,7×19,5		LG		[-]	**PF0131**	87×53×17	OK039/ OK041
1.4 TSI	05/14→	110	150	ATE		[+]	**PF0135**	155,1×66×20,1		LG		[-]	**PF0131**	87×53×17	OK039/ OK041
1.6 TD	06/09→			ATE		[-]	**PF0134**	146×54,7×19,5		LG		[-]	**PF0131**	87×53×17	OK039/ OK041
1.6 TD	06/09→			ATE		[+]	**PF0132**	146×54,7×19,5		LG		[-]	**PF0131**	87×53×17	OK039/ OK041
1.6 TD	06/09→			ATE		[+]	**PF0135**	155,1×66×20,1		LG		[-]	**PF0131**	87×53×17	OK039/ OK041
1.6 Flex	01/13→	77	104	ATE		[+]	**PF0132**	146×54,7×19,5		LG		[-]	**PF0131**	87×53×17	OK039/ OK041
1.6 Flex	01/13→	77	104	ATE		[+]	**PF0135**	155,1×66×20,1		LG		[-]	**PF0131**	87×53×17	OK039/ OK041
Polo Limousine (9N)															
1.4	07/03→			ATE		[+]	**PF0516**	146×54,7×19,5		LG		[-]	**PF0131**	87×53×17	OK039/ OK041
1.4	07/03→			ATE	(1LM-1ZN)	[+]	**PF0396**	137,8×49×17		LG		[-]	**PF0131**	87×53×17	OK039/ OK041
1.4 16V	11/03→			ATE		[+]	**PF0516**	146×54,7×19,5		LG		[-]	**PF0131**	87×53×17	OK039/ OK041
1.4 16V	11/03→			ATE	(1LM-1ZN)	[+]	**PF0396**	137,8×49×17		LG		[-]	**PF0131**	87×53×17	OK039/ OK041
1.4 TDI	07/03→			ATE		[+]	**PF0516**	146×54,7×19,5		LG		[-]	**PF0131**	87×53×17	OK039/ OK041

		KW	CV	SiS	i	W.i.	MAGNETI MARELLI	W×H×Th (mm)	Extra kit [Opt]	SiS	i	W.i.	MAGNETI MARELLI	W×H×Th (mm)	Extra kit [Opt]
VOLKSWAGEN															
Polo Limousine (9N)															
1.4 TDI	07/03→			ATE	(1LM-1ZN)	[+]	**PF0396**	137,8×49×17		LG		[-]	**PF0131**	87×53×17	OK039/ OK041
1.9 Sdi	11/03→			ATE		[+]	**PF0516**	146×54,7×19,5		LG		[-]	**PF0131**	87×53×17	OK039/ OK041
1.9 Sdi	11/03→			ATE	(1LM-1ZN)	[+]	**PF0396**	137,8×49×17		LG		[-]	**PF0131**	87×53×17	OK039/ OK041
Routan (U.S.A.)															
3.6	01/11→	196	267	ST	CJRA	[-]	**PF0211**	146×64×18		LG		[-]	**PF0210**	116,7×52,6×17	
3.6	01/11→	208	283	ST		[-]	**PF0211**	146×64×18		LG		[-]	**PF0210**	116,7×52,6×17	
3.8	01/09→12/10	147	200	ST	CGUA	[-]	**PF0211**	146×64×18		LG		[-]	**PF0210**	116,7×52,6×17	
4.0	01/09→12/10	187	254	ST	CGVA	[-]	**PF0211**	146×64×18		LG		[-]	**PF0210**	116,7×52,6×17	
Santana															
1.3	83→			KH		[-]	**PF0392**	138×49×19,5							
1.6 - D - TD	83→			KH		[-]	**PF0392**	138×49×19,5							
1.8 - 1.9 - 2.0 - 2.2	83→			KH		[-]	**PF0392**	138×49×19,5							
Scirocco I															
1.3 - 1.5 - 1.6	83→			KH		[-]	**PF0392**	138×49×19,5							
1.6i - GTI	83→			KH		[-]	**PF0394**	138×49×15							
1.8	83→			KH		[-]	**PF0394**	138×49×15							
1.8i	83→			KH		[-]	**PF0394**	138×49×15							
1.8 GTI	83→			KH		[-]	**PF0394**	138×49×15							
1.8i 16V	86→92									LG		[-]	**PF0144**	87×53×15	OK039
1.8i 16V GTI	→83			LG		[-]	**PF0806**	119×69,7×16	OK030	LG		[-]	**PF0144**	87×53×15	OK039
Scirocco II (137)															
1.4 TSI	09/08→	118	160	ATE		[+]	**PF0135**	155,1×66×20,1		LG		[-]	**PF0601**	105,5×56×16,7	OK039/ OK085
1.4 TSI	09/08→	118	160	ATE		[+]	**PF0135**	155,1×66×20,1		LG		[-]	**PF0131**	87×53×17	OK039/ OK041
1.4 TSI	09/08→	118	160	ATE		[+]	**PF0135**	155,1×66×20,1		BSC	1KS/ØDisc 272×16	[-]	**PF0441**	109,2×53,3×17,5	OK033
1.4 TSI	09/08→	90	122	ATE		[+]	**PF0135**	155,1×66×20,1		LG		[-]	**PF0601**	105,5×56×16,7	OK039/ OK085
1.4 TSI	09/08→	90	122	ATE		[+]	**PF0135**	155,1×66×20,1		LG		[-]	**PF0131**	87×53×17	OK039/ OK041
1.4 TSI	09/08→	90	122	ATE		[+]	**PF0135**	155,1×66×20,1		BSC	1KS/ØDisc 272×16	[-]	**PF0441**	109,2×53,3×17,5	OK033
2.0 R	11/09→	188	256	ATE		[+]	**PF0135**	155,1×66×20,1		LG		[-]	**PF0601**	105,5×56×16,7	OK039/ OK085
2.0 R	11/09→	188	256	ATE		[+]	**PF0135**	155,1×66×20,1		LG		[-]	**PF0131**	87×53×17	OK039/ OK041
2.0 R	11/09→	188	256	ATE		[+]	**PF0135**	155,1×66×20,1		BSC	1KS/ØDisc 272×16	[-]	**PF0441**	109,2×53,3×17,5	OK033

		KW	CV	SiS	i	W.i.	MAGNETI MARELLI	W×H×Th (mm)	Extra kit [Opt]	SiS	i	W.i.	MAGNETI MARELLI	W×H×Th (mm)	Extra kit [Opt]
VOLKSWAGEN															
Scirocco II (137)															
2.0 R	11/09→	195	265	ATE		[+]	**PF0135**	155,1×66×20,1		LG		[-]	**PF0601**	105,5×56×16,7	OK039/ OK085
2.0 R	11/09→	195	265	ATE		[+]	**PF0135**	155,1×66×20,1		LG		[-]	**PF0131**	87×53×17	OK039/ OK041
2.0 R	11/09→	195	265	ATE		[+]	**PF0135**	155,1×66×20,1		BSC	1KS/ØDisc 272×16	[-]	**PF0441**	109,2×53,3×17,5	OK033
2.0 TDI	11/10→	100	136	ATE		[+]	**PF0135**	155,1×66×20,1		LG		[-]	**PF0601**	105,5×56×16,7	OK039/ OK085
2.0 TDI	11/10→	100	136	ATE		[+]	**PF0135**	155,1×66×20,1		LG		[-]	**PF0131**	87×53×17	OK039/ OK041
2.0 TDI	11/10→	100	136	ATE		[+]	**PF0135**	155,1×66×20,1		BSC	1KS/ØDisc 272×16	[-]	**PF0441**	109,2×53,3×17,5	OK033
2.0 TDI	09/08→	103	140	ATE		[+]	**PF0135**	155,1×66×20,1		LG		[-]	**PF0601**	105,5×56×16,7	OK039/ OK085
2.0 TDI	09/08→	103	140	ATE		[+]	**PF0135**	155,1×66×20,1		LG		[-]	**PF0131**	87×53×17	OK039/ OK041
2.0 TDI	09/08→	103	140	ATE		[+]	**PF0135**	155,1×66×20,1		BSC	1KS/ØDisc 272×16	[-]	**PF0441**	109,2×53,3×17,5	OK033
2.0 TDI	05/09→	125	170	ATE		[+]	**PF0135**	155,1×66×20,1		LG		[-]	**PF0601**	105,5×56×16,7	OK039/ OK085
2.0 TDI	05/09→	125	170	ATE		[+]	**PF0135**	155,1×66×20,1		LG		[-]	**PF0131**	87×53×17	OK039/ OK041
2.0 TDI	05/09→	125	170	ATE		[+]	**PF0135**	155,1×66×20,1		BSC	1KS/ØDisc 272×16	[-]	**PF0441**	109,2×53,3×17,5	OK033
2.0 TSI	09/08→	147	200	ATE		[+]	**PF0135**	155,1×66×20,1		LG		[-]	**PF0601**	105,5×56×16,7	OK039/ OK085
2.0 TSI	09/08→	147	200	ATE		[+]	**PF0135**	155,1×66×20,1		LG		[-]	**PF0131**	87×53×17	OK039/ OK041
2.0 TSI	09/08→	147	200	ATE		[+]	**PF0135**	155,1×66×20,1		BSC	1KS/ØDisc 272×16	[-]	**PF0441**	109,2×53,3×17,5	OK033
2.0 TSI	11/09→	155	210	ATE		[+]	**PF0135**	155,1×66×20,1		LG		[-]	**PF0601**	105,5×56×16,7	OK039/ OK085
2.0 TSI	11/09→	155	210	ATE		[+]	**PF0135**	155,1×66×20,1		LG		[-]	**PF0131**	87×53×17	OK039/ OK041
2.0 TSI	11/09→	155	210	ATE		[+]	**PF0135**	155,1×66×20,1		BSC	1KS/ØDisc 272×16	[-]	**PF0441**	109,2×53,3×17,5	OK033
Sharan I															
1.8 T.	97→00			ATE		[-]	**PF0260**	156,4×74,2×19		LG		[-]	**PF0131**	87×53×17	OK039/ OK041
1.8 20V T.	00→06			ATE		[+]	**PF0261**	156,4×74,2×19		LG		[-]	**PF0131**	87×53×17	OK039/ OK041
1.8 20V T.	00→06			ATE		[+]	**PF0261**	156,4×74,2×19		LG		[+]	**PF0259**	87×53×17	OK039

		KW	CV	SiS	i	W.i.	MAGNETI MARELLI	W×H×Th (mm)	Extra kit [Opt]	SiS	i	W.i.	MAGNETI MARELLI	W×H×Th (mm)	Extra kit [Opt]
VOLKSWAGEN															
Sharan I															
1.9id	95 → 00			ATE		[-]	**PF0260**	156,4×74,2×19		LG		[-]	**PF0131**	87×53×17	OK039/ OK041
1.9 TDI	00 → 06			ATE		[+]	**PF0261**	156,4×74,2×19		LG		[-]	**PF0131**	87×53×17	OK039/ OK041
1.9 TDI	00 → 06			ATE		[+]	**PF0261**	156,4×74,2×19		LG		[+]	**PF0259**	87×53×17	OK039
1.9 TDI	00 → 06									LG	+2 w.i.	[+]	**PF0258**	94,9×51×16,8	OK030
1.9 TDI	05/00 → 06	66		ATE	T7M20000001 →	[+]	**PF0262**	156,4×78,7×19		LG		[+]	**PF0259**	87×53×17	OK039
1.9 TDI	05/00 → 06	81		ATE	T7M20000001 →	[+]	**PF0262**	156,4×78,7×19		LG		[+]	**PF0259**	87×53×17	OK039
2.0	00 → 06			ATE		[+]	**PF0261**	156,4×74,2×19		LG		[+]	**PF0259**	87×53×17	OK039
2.0i	95 → 06			ATE		[-]	**PF0260**	156,4×74,2×19		LG		[-]	**PF0131**	87×53×17	OK039/ OK041
2.0i 16V	95 → 00			ATE		[-]	**PF0260**	156,4×74,2×19		LG		[-]	**PF0131**	87×53×17	OK039/ OK041
2.0i	00 → 06			ATE		[+]	**PF0261**	156,4×74,2×19		LG		[-]	**PF0131**	87×53×17	OK039/ OK041
2.0i	05/00 → 06	85		ATE	T7M20000001 →	[+]	**PF0262**	156,4×78,7×19		LG		[+]	**PF0259**	87×53×17	OK039
2.8i VR6	95 → 00			ATE		[-]	**PF0260**	156,4×74,2×19		LG		[-]	**PF0131**	87×53×17	OK039/ OK041
2.8i V6	00 → 06			ATE		[+]	**PF0261**	156,4×74,2×19		LG		[-]	**PF0131**	87×53×17	OK039/ OK041
2.8i VR6	00 → 06									LG	+2 w.i.	[+]	**PF0258**	94,9×51×16,8	OK030
2.8i VR6 Syncro	00 → 06									LG	+2 w.i.	[+]	**PF0258**	94,9×51×16,8	OK030
Sharan II (7M_)															
1.8 T 20V	09/97 → 03/10	110	150	ATE		[+]	**PF0262**	156,4×78,7×19		LG		[+]	**PF0259**	87×53×17	OK039
1.8 T 20V	09/97 → 03/10	110	150							LG	+2 w.i.	[+]	**PF0258**	94,9×51×16,8	OK030
1.9 TDI	09/95 → 03/10	66	90	ATE		[+]	**PF0262**	156,4×78,7×19		LG		[+]	**PF0259**	87×53×17	OK039
1.9 TDI	09/95 → 03/10	66	90							LG	+2 w.i.	[+]	**PF0258**	94,9×51×16,8	OK030
1.9 TDI	09/96 → 04/00	81	110	ATE		[+]	**PF0262**	156,4×78,7×19		LG		[+]	**PF0259**	87×53×17	OK039
1.9 TDI	09/96 → 04/00	81	110							LG	+2 w.i.	[+]	**PF0258**	94,9×51×16,8	OK030
1.9 TDI	04/00 → 03/10	85	115	ATE		[+]	**PF0262**	156,4×78,7×19		LG		[+]	**PF0259**	87×53×17	OK039
1.9 TDI	04/00 → 03/10	85	115							LG	+2 w.i.	[+]	**PF0258**	94,9×51×16,8	OK030
1.9 TDI	11/02 → 03/10	96	130	ATE		[+]	**PF0262**	156,4×78,7×19		LG		[+]	**PF0259**	87×53×17	OK039
1.9 TDI	11/02 → 03/10	96	130							LG	+2 w.i.	[+]	**PF0258**	94,9×51×16,8	OK030
1.9 TDI	06/05 → 03/10	110	150	ATE		[+]	**PF0262**	156,4×78,7×19		LG		[+]	**PF0259**	87×53×17	OK039
1.9 TDI	06/05 → 03/10	110	150							LG	+2 w.i.	[+]	**PF0258**	94,9×51×16,8	OK030
1.9 TDI 4motion	04/00 → 03/10	85	115	ATE		[+]	**PF0262**	156,4×78,7×19		LG		[+]	**PF0259**	87×53×17	OK039
1.9 TDI 4motion	04/00 → 03/10	85	115							LG	+2 w.i.	[+]	**PF0258**	94,9×51×16,8	OK030
2.0	09/95 → 03/10	85	115	ATE		[+]	**PF0262**	156,4×78,7×19		LG		[+]	**PF0259**	87×53×17	OK039

		KW	CV	SiS	i	W.i.	MAGNETI MARELLI	W×H×Th (mm)	Extra kit [Opt]	SiS	i	W.i.	MAGNETI MARELLI	W×H×Th (mm)	Extra kit [Opt]
VOLKSWAGEN															
Sharan II (7M_)															
2.0	09/95 → 03/10	85	115							LG	+2 w.i.	[+]	**PF0258**	94,9×51×16,8	OK030
2.0	09/95 → 02/00	110	150	ATE		[+]	**PF0262**	156,4×78,7×19		LG		[+]	**PF0259**	87×53×17	OK039
2.0	09/95 → 02/00	110	150							LG	+2 w.i.	[+]	**PF0258**	94,9×51×16,8	OK030
2.0 LPG	04/06 → 03/10	85	115	ATE		[+]	**PF0262**	156,4×78,7×19		LG		[+]	**PF0259**	87×53×17	OK039
2.0 LPG	04/06 → 03/10	85	115							LG	+2 w.i.	[+]	**PF0258**	94,9×51×16,8	OK030
2.0 TDI	11/05 → 03/10	100	136	ATE		[+]	**PF0262**	156,4×78,7×19		LG		[+]	**PF0259**	87×53×17	OK039
2.0 TDI	11/05 → 03/10	100	136							LG	+2 w.i.	[+]	**PF0258**	94,9×51×16,8	OK030
2.0 TDI	11/05 → 03/10	103	140	ATE		[+]	**PF0262**	156,4×78,7×19		LG		[+]	**PF0259**	87×53×17	OK039
2.0 TDI	11/05 → 03/10	103	140							LG	+2 w.i.	[+]	**PF0258**	94,9×51×16,8	OK030
2.8 V6 24V	04/00 → 03/10	150	204	ATE		[+]	**PF0262**	156,4×78,7×19		LG		[+]	**PF0259**	87×53×17	OK039
2.8 V6 24V	04/00 → 03/10	150	204							LG	+2 w.i.	[+]	**PF0258**	94,9×51×16,8	OK030
2.8 V6 24V 4motion	04/00 → 03/10	150	204	ATE		[+]	**PF0262**	156,4×78,7×19		LG		[+]	**PF0259**	87×53×17	OK039
2.8 V6 24V 4motion	04/00 → 03/10	150	204							LG	+2 w.i.	[+]	**PF0258**	94,9×51×16,8	OK030
2.8 VR6	09/95 → 04/00	128	174	ATE		[+]	**PF0262**	156,4×78,7×19		LG		[+]	**PF0259**	87×53×17	OK039
2.8 VR6	09/95 → 04/00	128	174							LG	+2 w.i.	[+]	**PF0258**	94,9×51×16,8	OK030
2.8 VR6 Syncro	11/96 → 04/00	128	174	ATE		[+]	**PF0262**	156,4×78,7×19		LG		[+]	**PF0259**	87×53×17	OK039
2.8 VR6 Syncro	11/96 → 04/00	128	174							LG	+2 w.i.	[+]	**PF0258**	94,9×51×16,8	OK030
Sharan III (7N)															
1.4 TSI	05/10 →	110	150	ATE		[+]	**PF0659**	155,1×66,6×19,5		LG		[-]	**PF0658**	105,3×56,3×17	OK039
1.4 TSI	05/10 →	110	150							LG		[-]	**PF0658**	105,3×56,3×17	OK039
2.0 TDI	11/11 →	85	116	ATE		[+]	**PF0659**	155,1×66,6×19,5		LG		[-]	**PF0658**	105,3×56,3×17	OK039
2.0 TDI	11/11 →	85	116							LG		[-]	**PF0658**	105,3×56,3×17	OK039
2.0 TDI	05/10 →	103	140	ATE		[+]	**PF0659**	155,1×66,6×19,5		LG		[-]	**PF0658**	105,3×56,3×17	OK039
2.0 TDI	05/10 →	103	140							LG		[-]	**PF0658**	105,3×56,3×17	OK039
2.0 TDI	08/10 →	125	170	ATE		[+]	**PF0659**	155,1×66,6×19,5		LG		[-]	**PF0658**	105,3×56,3×17	OK039
2.0 TDI	08/10 →	125	170							LG		[-]	**PF0658**	105,3×56,3×17	OK039
2.0 TDI	05/10 →	100	136	ATE		[+]	**PF0659**	155,1×66,6×19,5		LG		[-]	**PF0658**	105,3×56,3×17	OK039
2.0 TDI	05/10 →	100	136							LG		[-]	**PF0658**	105,3×56,3×17	OK039
2.0 TDI 4motion	05/11 →	100	136	ATE		[+]	**PF0659**	155,1×66,6×19,5		LG		[-]	**PF0658**	105,3×56,3×17	OK039
2.0 TDI 4motion	05/11 →	100	136							LG		[-]	**PF0658**	105,3×56,3×17	OK039
2.0 TDI 4motion	05/11 →	103	140	ATE		[+]	**PF0659**	155,1×66,6×19,5		LG		[-]	**PF0658**	105,3×56,3×17	OK039
2.0 TDI 4motion	05/11 →	103	140							LG		[-]	**PF0658**	105,3×56,3×17	OK039
2.0 TSI	12/10 →	147	200	ATE		[+]	**PF0659**	155,1×66,6×19,5		LG		[-]	**PF0658**	105,3×56,3×17	OK039
2.0 TSI	12/10 →	147	200							LG		[-]	**PF0658**	105,3×56,3×17	OK039

		KW	CV	SiS	i	W.i.	MAGNETI MARELLI	W×H×Th (mm)	Extra kit [Opt]	SiS	i	W.i.	MAGNETI MARELLI	W×H×Th (mm)	Extra kit [Opt]
VOLKSWAGEN															
Tiguan (5N_)															
1.4 TSI	05/11 →	118	160	ATE		[+]	**PF0659**	155,1×66,6×19,5		LG		[-]	**PF0658**	105,3×56,3×17	OK039
1.4 TSI	05/08 →	110	150	ATE		[+]	**PF0659**	155,1×66,6×19,5		LG		[-]	**PF0658**	105,3×56,3×17	OK039
1.4 TSI	08/10 →	90	122	ATE		[+]	**PF0659**	155,1×66,6×19,5		LG		[-]	**PF0658**	105,3×56,3×17	OK039
1.4 TSI 4motion	05/11 →	118	160	ATE		[+]	**PF0659**	155,1×66,6×19,5		LG		[-]	**PF0658**	105,3×56,3×17	OK039
1.4 TSI 4motion	09/07 →	110	150	ATE		[+]	**PF0659**	155,1×66,6×19,5		LG		[-]	**PF0658**	105,3×56,3×17	OK039
2.0 TDI	03/08 →	103	140	ATE		[+]	**PF0659**	155,1×66,6×19,5		LG		[-]	**PF0658**	105,3×56,3×17	OK039
2.0 TDI	05/10 →	81	110	ATE		[+]	**PF0659**	155,1×66,6×19,5		LG		[-]	**PF0658**	105,3×56,3×17	OK039
2.0 TDI 4motion	02/08 → 08/09	120	163	ATE		[+]	**PF0659**	155,1×66,6×19,5		LG		[-]	**PF0658**	105,3×56,3×17	OK039
2.0 TDI 4motion	09/07 →	103	140	ATE		[+]	**PF0659**	155,1×66,6×19,5		LG		[-]	**PF0658**	105,3×56,3×17	OK039
2.0 TDI 4motion	09/07 →	125	170	ATE		[+]	**PF0659**	155,1×66,6×19,5		LG		[-]	**PF0658**	105,3×56,3×17	OK039
2.0 TDI 4motion	11/07 →	100	136	ATE		[+]	**PF0659**	155,1×66,6×19,5		LG		[-]	**PF0658**	105,3×56,3×17	OK039
2.0 TFSI	05/08 →	125	170	ATE		[+]	**PF0659**	155,1×66,6×19,5		LG		[-]	**PF0658**	105,3×56,3×17	OK039
2.0 TFSI	11/07 →	147	200	ATE		[+]	**PF0659**	155,1×66,6×19,5		LG		[-]	**PF0658**	105,3×56,3×17	OK039
2.0 TFSI 4motion	09/07 →	147	200	ATE		[+]	**PF0659**	155,1×66,6×19,5		LG		[-]	**PF0658**	105,3×56,3×17	OK039
2.0 TFSI 4motion	09/07 →	125	170	ATE		[+]	**PF0659**	155,1×66,6×19,5		LG		[-]	**PF0658**	105,3×56,3×17	OK039
2.0 TSI 4motion	05/11 →	132	180	ATE		[+]	**PF0659**	155,1×66,6×19,5		LG		[-]	**PF0658**	105,3×56,3×17	OK039
2.0 TSI 4motion	05/11 →	155	211	ATE		[+]	**PF0659**	155,1×66,6×19,5		LG		[-]	**PF0658**	105,3×56,3×17	OK039
Touareg (7L)															
2.5TDI RS	11/04 →			ATE	+2 w.i.	[+]	**PF0625**	155,2×73,5×17,9							
3.0 V6 TDI	11/04 →			ATE	+2 w.i./16"	[+]	**PF0625**	155,2×73,5×17,9							
3.2i V6	11/04 →			ATE	+2 w.i./16"	[+]	**PF0625**	155,2×73,5×17,9							
4.2 V8	10/02 →			ATE	+2 w.i.	[+]	**PF0625**	155,2×73,5×17,9							
5.0 V10 TDI	11/04 →			ATE	+2 w.i./16"	[+]	**PF0625**	155,2×73,5×17,9							
Touran (1T1, 1T2)															
1.2 TSI	05/10 →	77	105	ATE		[+]	**PF0135**	155,1×66×20,1		LG		[-]	**PF0133**	105,5×56×17	OK039/ OK085
1.2 TSI	05/10 →	77	105	ATE		[+]	**PF0135**	155,1×66×20,1		LG		[-]	**PF0444**	87×53×17	OK039
1.4 FSI	11/06 →	125	170	ATE		[+]	**PF0135**	155,1×66×20,1		LG		[-]	**PF0133**	105,5×56×17	OK039/ OK085
1.4 FSI	11/06 →	125	170	ATE		[+]	**PF0135**	155,1×66×20,1		LG		[-]	**PF0444**	87×53×17	OK039
1.4 TSI	02/06 →	103	140	ATE		[+]	**PF0135**	155,1×66×20,1		LG		[-]	**PF0133**	105,5×56×17	OK039/ OK085
1.4 TSI	02/06 →	103	140	ATE		[+]	**PF0135**	155,1×66×20,1		LG		[-]	**PF0444**	87×53×17	OK039

VOLKSWAGEN

Touran (1T1, 1T2)

		KW	CV	SiS	i	W.i.	MAGNETI MARELLI	W×H×Th (mm)	Extra kit [Opt]	SiS	i	W.i.	MAGNETI MARELLI	W×H×Th (mm)	Extra kit [Opt]
1.4 TSI EcoFuel	05/09 →	110	150	ATE		[+]	PF0135	155,1×66×20,1		LG		[-]	PF0133	105,5×56×17	OK039/ OK085
1.4 TSI EcoFuel	05/09 →	110	150	ATE		[+]	PF0135	155,1×66×20,1		LG		[-]	PF0444	87×53×17	OK039
1.6	07/03 → 05/10	75	102	ATE		[+]	PF0135	155,1×66×20,1		LG		[-]	PF0133	105,5×56×17	OK039/ OK085
1.6	07/03 → 05/10	75	102	ATE		[+]	PF0135	155,1×66×20,1		LG		[-]	PF0444	87×53×17	OK039
1.6 FSI	02/03 → 01/07	85	115	ATE		[+]	PF0135	155,1×66×20,1		LG		[-]	PF0133	105,5×56×17	OK039/ OK085
1.6 FSI	02/03 → 01/07	85	115	ATE		[+]	PF0135	155,1×66×20,1		LG		[-]	PF0444	87×53×17	OK039
1.6 TDI	05/10 →	77	105	ATE		[+]	PF0135	155,1×66×20,1		LG		[-]	PF0133	105,5×56×17	OK039/ OK085
1.6 TDI	05/10 →	77	105	ATE		[+]	PF0135	155,1×66×20,1		LG		[-]	PF0444	87×53×17	OK039
1.6 TDI	05/10 →	66	90	ATE		[+]	PF0135	155,1×66×20,1		LG		[-]	PF0133	105,5×56×17	OK039/ OK085
1.6 TDI	05/10 →	66	90	ATE		[+]	PF0135	155,1×66×20,1		LG		[-]	PF0444	87×53×17	OK039
1.9 TDI	02/03 →	74	100	ATE		[+]	PF0135	155,1×66×20,1		LG		[-]	PF0133	105,5×56×17	OK039/ OK085
1.9 TDI	02/03 →	74	100	ATE		[+]	PF0135	155,1×66×20,1		LG		[-]	PF0444	87×53×17	OK039
1.9 TDI	08/03 → 05/10	77	105	ATE		[+]	PF0135	155,1×66×20,1		LG		[-]	PF0133	105,5×56×17	OK039/ OK085
1.9 TDI	08/03 → 05/10	77	105	ATE		[+]	PF0135	155,1×66×20,1		LG		[-]	PF0444	87×53×17	OK039
1.9 TDI	11/04 → 05/10	66	90	ATE		[+]	PF0135	155,1×66×20,1		LG		[-]	PF0133	105,5×56×17	OK039/ OK085
1.9 TDI	11/04 → 05/10	66	90	ATE		[+]	PF0135	155,1×66×20,1		LG		[-]	PF0444	87×53×17	OK039
2.0 EcoFuel	02/06 → 05/09	80	109	ATE		[+]	PF0135	155,1×66×20,1		LG		[-]	PF0133	105,5×56×17	OK039/ OK085
2.0 EcoFuel	02/06 → 05/09	80	109	ATE		[+]	PF0135	155,1×66×20,1		LG		[-]	PF0444	87×53×17	OK039
2.0 FSI	10/03 →	110	150	ATE		[+]	PF0135	155,1×66×20,1		LG		[-]	PF0133	105,5×56×17	OK039/ OK085
2.0 FSI	10/03 →	110	150	ATE		[+]	PF0135	155,1×66×20,1		LG		[-]	PF0444	87×53×17	OK039
2.0 FSI	10/04 →	85	115	ATE		[+]	PF0135	155,1×66×20,1		LG		[-]	PF0133	105,5×56×17	OK039/ OK085
2.0 FSI	10/04 →	85	115	ATE		[+]	PF0135	155,1×66×20,1		LG		[-]	PF0444	87×53×17	OK039
2.0 TDI	05/10 →	81	110	ATE		[+]	PF0135	155,1×66×20,1		LG		[-]	PF0133	105,5×56×17	OK039/ OK085
2.0 TDI	05/10 →	81	110	ATE		[+]	PF0135	155,1×66×20,1		LG		[-]	PF0444	87×53×17	OK039
2.0 TDI	02/03 → 05/10	100	136	ATE		[+]	PF0135	155,1×66×20,1		LG		[-]	PF0133	105,5×56×17	OK039/ OK085
2.0 TDI	02/03 → 05/10	100	136	ATE		[+]	PF0135	155,1×66×20,1		LG		[-]	PF0444	87×53×17	OK039
2.0 TDI	12/05 →	125	170	ATE		[+]	PF0135	155,1×66×20,1		LG		[-]	PF0133	105,5×56×17	OK039/ OK085
2.0 TDI	12/05 →	125	170	ATE		[+]	PF0135	155,1×66×20,1		LG		[-]	PF0444	87×53×17	OK039
2.0 TDI	12/05 → 05/10	103	140	ATE		[+]	PF0135	155,1×66×20,1		LG		[-]	PF0133	105,5×56×17	OK039/ OK085

		KW	CV													
				SiS	i	W.i.	MAGNETI MARELLI	W×H×Th (mm)	Extra kit [Opt]	SiS	i	W.i.	MAGNETI MARELLI	W×H×Th (mm)	Extra kit [Opt]
VOLKSWAGEN															
Touran (1T1, 1T2)															
2.0 TDI	12/05 → 05/10	103	140	ATE		[+]	**PF0135**	155,1×66×20,1		LG		[-]	**PF0444**	87×53×17	OK039
2.0 TDI 16V	08/03 →	103	140	ATE		[+]	**PF0135**	155,1×66×20,1		LG		[-]	**PF0133**	105,5×56×17	OK039/ OK085
2.0 TDI 16V	08/03 →	103	140	ATE		[+]	**PF0135**	155,1×66×20,1		LG		[-]	**PF0444**	87×53×17	OK039
Touran (1T3)															
1.4 TSI	05/10 →	103	140	ATE		[+]	**PF0135**	155,1×66×20,1		LG		[-]	**PF0133**	105,5×56×17	OK039/ OK085
1.4 TSI	05/10 →	103	140	ATE		[+]	**PF0135**	155,1×66×20,1		LG		[-]	**PF0444**	87×53×17	OK039
1.4 TSI	05/10 →	103	140	ATE		[+]	**PF0135**	155,1×66×20,1		BSC	1KS/ØDisc 272×16	[-]	**PF0441**	109,2×53,3×17,5	OK033
1.4 TSI	05/10 →	125	170	ATE		[+]	**PF0135**	155,1×66×20,1		LG		[-]	**PF0133**	105,5×56×17	OK039/ OK085
1.4 TSI	05/10 →	125	170	ATE		[+]	**PF0135**	155,1×66×20,1		LG		[-]	**PF0444**	87×53×17	OK039
1.4 TSI	05/10 →	125	170	ATE		[+]	**PF0135**	155,1×66×20,1		BSC	1KS/ØDisc 272×16	[-]	**PF0441**	109,2×53,3×17,5	OK033
1.4 TSI EcoFuel	05/10 →	110	150	ATE		[+]	**PF0135**	155,1×66×20,1		LG		[-]	**PF0133**	105,5×56×17	OK039/ OK085
1.4 TSI EcoFuel	05/10 →	110	150	ATE		[+]	**PF0135**	155,1×66×20,1		LG		[-]	**PF0444**	87×53×17	OK039
1.4 TSI EcoFuel	05/10 →	110	150	ATE		[+]	**PF0135**	155,1×66×20,1		BSC	1KS/ØDisc 272×16	[-]	**PF0441**	109,2×53,3×17,5	OK033
1.6 TDI	05/10 →	77	105	ATE		[+]	**PF0135**	155,1×66×20,1		LG		[-]	**PF0133**	105,5×56×17	OK039/ OK085
1.6 TDI	05/10 →	77	105	ATE		[+]	**PF0135**	155,1×66×20,1		LG		[-]	**PF0444**	87×53×17	OK039
1.6 TDI	05/10 →	77	105	ATE		[+]	**PF0135**	155,1×66×20,1		BSC	1KS/ØDisc 272×16	[-]	**PF0441**	109,2×53,3×17,5	OK033
2.0 TDI	05/10 →	103	140	ATE		[+]	**PF0135**	155,1×66×20,1		LG		[-]	**PF0133**	105,5×56×17	OK039/ OK085
2.0 TDI	05/10 →	103	140	ATE		[+]	**PF0135**	155,1×66×20,1		LG		[-]	**PF0444**	87×53×17	OK039
2.0 TDI	05/10 →	103	140	ATE		[+]	**PF0135**	155,1×66×20,1		BSC	1KS/ØDisc 272×16	[-]	**PF0441**	109,2×53,3×17,5	OK033
2.0 TDI	05/10 →	125	170	ATE		[+]	**PF0135**	155,1×66×20,1		LG		[-]	**PF0133**	105,5×56×17	OK039/ OK085
2.0 TDI	05/10 →	125	170	ATE		[+]	**PF0135**	155,1×66×20,1		LG		[-]	**PF0444**	87×53×17	OK039
2.0 TDI	05/10 →	125	170	ATE		[+]	**PF0135**	155,1×66×20,1		BSC	1KS/ØDisc 272×16	[-]	**PF0441**	109,2×53,3×17,5	OK033
2.0 TDI	01/13 →	130	177	ATE		[+]	**PF0135**	155,1×66×20,1		LG		[-]	**PF0133**	105,5×56×17	OK039/ OK085
2.0 TDI	01/13 →	130	177	ATE		[+]	**PF0135**	155,1×66×20,1		BSC	1KS/ØDisc 272×16	[-]	**PF0441**	109,2×53,3×17,5	OK033

		KW	CV	SiS	i	W.i.	MAGNETI MARELLI	W×H×Th (mm)	Extra kit [Opt]	SiS	i	W.i.	MAGNETI MARELLI	W×H×Th (mm)	Extra kit [Opt]
VOLKSWAGEN															
Touran Cross															
1.6	07→			ATE		[+]	**PF0135**	155,1×66×20,1		LG		[-]	**PF0444**	87×53×17	OK039
1.6	07→			ATE		[+]	**PF0135**	155,1×66×20,1		LG		[-]	**PF0133**	105,5×56×17	OK039/ OK085
1.9 TDI	07→			ATE		[+]	**PF0135**	155,1×66×20,1		LG		[-]	**PF0444**	87×53×17	OK039
1.9 TDI	07→			ATE		[+]	**PF0135**	155,1×66×20,1		LG		[-]	**PF0133**	105,5×56×17	OK039/ OK085
2.0 TDI	07→			ATE		[+]	**PF0135**	155,1×66×20,1		LG		[-]	**PF0444**	87×53×17	OK039
2.0 TDI	07→			ATE		[+]	**PF0135**	155,1×66×20,1		LG		[-]	**PF0133**	105,5×56×17	OK039/ OK085
Transporter T4 IV															
1.8	90→06/96			LG	14"	[-]	**PF0488**	130×54,5×19	OK032	LG	+1 w.i.	[+]	**PF0586**	94,9×51×16,2	OK032
1.8	90→									LG	+1 w.i.	[+]	**PF0586**	94,9×51×16,2	OK032
1.8	95→			LG	15"	[-]	**PF0415**	91,6×80×18		LG	+1 w.i.	[+]	**PF0586**	94,9×51×16,2	OK032
1.8	90→98			ATE	15"	[-]	**PF0418**	156,5×68,5×19,5		LG		[-]	**PF0529**	95×57×17	OK030
1.8	90→98			LG	15"	[-]	**PF0417**	129,9×65,2×19	OK030	LG		[-]	**PF0529**	95×57×17	OK030
1.8	90→98			ATE	15"	[-]	**PF0418**	156,5×68,5×19,5		LG		[-]	**PF0529**	95×57×17	OK030
1.9 D	90→06/96			LG	14"	[-]	**PF0488**	130×54,5×19	OK032	LG	+1 w.i.	[+]	**PF0586**	94,9×51×16,2	OK032
1.9 D	90→									LG	+1 w.i.	[+]	**PF0586**	94,9×51×16,2	OK032
1.9 D	95→			LG	15"	[-]	**PF0415**	91,6×80×18		LG	+1 w.i.	[+]	**PF0586**	94,9×51×16,2	OK032
1.9 D	97→00			ATE	16"	[+]	**PF0539**	156,4×78,7×19		LG		[+]	**PF0541**	94,9×57,4×16,2	
1.9 D	97→00			ATE	16"	[+]	**PF0539**	156,4×78,7×19		LG		[-]	**PF0542**	94,9×57,4×16,2	
1.9 D	90→98			ATE	15"	[-]	**PF0418**	156,5×68,5×19,5		LG		[-]	**PF0529**	95×57×17	OK030
1.9 D	90→98			LG	15"	[-]	**PF0417**	129,9×65,2×19	OK030	LG		[-]	**PF0529**	95×57×17	OK030
1.9 TD	90→06/96			LG	14"	[-]	**PF0488**	130×54,5×19	OK032	LG	+1 w.i.	[+]	**PF0586**	94,9×51×16,2	OK032
1.9 TD	90→									LG	+1 w.i.	[+]	**PF0586**	94,9×51×16,2	OK032
1.9 TD	95→			LG	15"	[-]	**PF0415**	91,6×80×18		LG	+1 w.i.	[+]	**PF0586**	94,9×51×16,2	OK032
1.9 TD	97→00			ATE	16"	[+]	**PF0539**	156,4×78,7×19		LG		[+]	**PF0541**	94,9×57,4×16,2	
1.9 TD	97→00			ATE	16"	[+]	**PF0539**	156,4×78,7×19		LG		[-]	**PF0542**	94,9×57,4×16,2	
1.9 TD	00→									LG	+2 w.i.	[+]	**PF0258**	94,9×51×16,8	OK030
1.9 TD	00→									LG		[-]	**PF0420**	94,9×51×16,8	OK032
1.9 TD	90→98			ATE	15"	[-]	**PF0418**	156,5×68,5×19,5		LG		[-]	**PF0529**	95×57×17	OK030
1.9 TD	09/90→06/00			LG	15"	[+]	**PF0528**	129,9×65,2×19	OK030	LG	+2 w.i.	[+]	**PF0258**	94,9×51×16,8	OK030
2.0	90→06/96			LG	14"	[-]	**PF0488**	130×54,5×19	OK032	LG	+1 w.i.	[+]	**PF0586**	94,9×51×16,2	OK032
2.0	90→									LG	+1 w.i.	[+]	**PF0586**	94,9×51×16,2	OK032
2.0	95→			LG	15"	[-]	**PF0415**	91,6×80×18		LG	+1 w.i.	[+]	**PF0586**	94,9×51×16,2	OK032
2.0	90→98			ATE	15"	[-]	**PF0418**	156,5×68,5×19,5		LG		[-]	**PF0529**	95×57×17	OK030
2.0	90→98			LG	15"	[-]	**PF0417**	129,9×65,2×19	OK030	LG		[-]	**PF0529**	95×57×17	OK030
2.0	90→98			ATE	15"	[-]	**PF0418**	156,5×68,5×19,5		LG		[-]	**PF0529**	95×57×17	OK030
2.0	09/90→06/00			LG	15"	[+]	**PF0528**	129,9×65,2×19	OK030	LG	+2 w.i.	[+]	**PF0258**	94,9×51×16,8	OK030
2.0	97→00			ATE	16"	[+]	**PF0539**	156,4×78,7×19		LG		[+]	**PF0541**	94,9×57,4×16,2	
2.0	97→00			ATE	16"	[+]	**PF0539**	156,4×78,7×19		LG		[-]	**PF0542**	94,9×57,4×16,2	
2.0	00→									LG	+2 w.i.	[+]	**PF0258**	94,9×51×16,8	OK030
2.0	00→									LG		[-]	**PF0420**	94,9×51×16,8	OK032
2.4 D	90→06/96			LG	14"	[-]	**PF0488**	130×54,5×19	OK032	LG	+1 w.i.	[+]	**PF0586**	94,9×51×16,2	OK032

		KW	CV													
				SiS	i	W.i.	MAGNETI MARELLI	W×H×Th (mm)	Extra kit [Opt]	SiS	i	W.i.	MAGNETI MARELLI	W×H×Th (mm)	Extra kit [Opt]
VOLKSWAGEN															
Transporter T4 IV															
2.4 D	90 →									LG	+1 w.i.	[+]	**PF0586**	94,9×51×16,2	OK032
2.4 D	95 →			LG	15"	[-]	**PF0415**	91,6×80×18		LG	+1 w.i.	[+]	**PF0586**	94,9×51×16,2	OK032
2.4 D	98 →			LG	-ABS/15"	[-]	**PF0417**	129,9×65,2×19	OK030	LG		[+]	**PF0541**	94,9×57,4×16,2	
2.4 D	90 → 98			ATE	15"	[-]	**PF0418**	156,5×68,5×19,5		LG		[-]	**PF0529**	95×57×17	OK030
2.4 D	90 → 98			LG	15"	[-]	**PF0417**	129,9×65,2×19	OK030	LG		[-]	**PF0529**	95×57×17	OK030
2.4 D	90 → 98			ATE	15"	[-]	**PF0418**	156,5×68,5×19,5		LG		[-]	**PF0529**	95×57×17	OK030
2.4 D	09/90 → 06/00			LG	15"	[+]	**PF0528**	129,9×65,2×19	OK030	LG	+2 w.i.	[+]	**PF0258**	94,9×51×16,8	OK030
2.4 D	97 → 00			ATE	16"	[+]	**PF0539**	156,4×78,7×19		LG		[+]	**PF0541**	94,9×57,4×16,2	
2.4 D	97 → 00			ATE	16"	[+]	**PF0539**	156,4×78,7×19		LG		[-]	**PF0542**	94,9×57,4×16,2	
2.4 D 4WD	97 → 00			ATE	16"	[+]	**PF0539**	156,4×78,7×19		LG		[+]	**PF0541**	94,9×57,4×16,2	
2.4 D 4WD	97 → 00			ATE	16"	[+]	**PF0539**	156,4×78,7×19		LG		[-]	**PF0542**	94,9×57,4×16,2	
2.4 D 4WD	00 →									LG	+2 w.i.	[+]	**PF0258**	94,9×51×16,8	OK030
2.4 D 4WD	00 →									LG		[-]	**PF0420**	94,9×51×16,8	OK032
2.5	90 → 06/96			LG	14"	[-]	**PF0488**	130×54,5×19	OK032	LG	+1 w.i.	[+]	**PF0586**	94,9×51×16,2	OK032
2.5	90 →									LG	+1 w.i.	[+]	**PF0586**	94,9×51×16,2	OK032
2.5	95 →			LG	15"	[-]	**PF0415**	91,6×80×18		LG	+1 w.i.	[+]	**PF0586**	94,9×51×16,2	OK032
2.5	01/98 →			LG	15"	[+]	**PF0416**	91,6×80×18		LG	+1 w.i.	[+]	**PF0586**	94,9×51×16,2	OK032
2.5	90 → 98			ATE	15"	[-]	**PF0418**	156,5×68,5×19,5		LG		[-]	**PF0529**	95×57×17	OK030
2.5	90 → 98			LG	15"	[-]	**PF0417**	129,9×65,2×19	OK030	LG		[-]	**PF0529**	95×57×17	OK030
2.5	90 → 98			ATE	15"	[-]	**PF0418**	156,5×68,5×19,5		LG		[-]	**PF0529**	95×57×17	OK030
2.5	09/90 → 06/00			LG	15"	[+]	**PF0528**	129,9×65,2×19	OK030	LG	+2 w.i.	[+]	**PF0258**	94,9×51×16,8	OK030
2.5	97 → 00			ATE	16"	[+]	**PF0539**	156,4×78,7×19		LG		[+]	**PF0541**	94,9×57,4×16,2	
2.5	97 → 00			ATE	16"	[+]	**PF0539**	156,4×78,7×19		LG		[-]	**PF0542**	94,9×57,4×16,2	
2.5	00 →									LG	+2 w.i.	[+]	**PF0258**	94,9×51×16,8	OK030
2.5	00 →									LG		[-]	**PF0420**	94,9×51×16,8	OK032
2.5 4WD	97 → 00			ATE	16"	[+]	**PF0539**	156,4×78,7×19		LG		[+]	**PF0541**	94,9×57,4×16,2	
2.5 4WD	97 → 00			ATE	16"	[+]	**PF0539**	156,4×78,7×19		LG		[-]	**PF0542**	94,9×57,4×16,2	
2.5 TD	98 →			LG	15"	[-]	**PF0417**	129,9×65,2×19	OK030	LG		[+]	**PF0541**	94,9×57,4×16,2	
2.5 TD	96 →			ATE	15"	[-]	**PF0418**	156,5×68,5×19,5		LG		[+]	**PF0541**	94,9×57,4×16,2	
2.5 TD	96 →			ATE	15"	[+]	**PF0419**	156,5×68,5×19,5		LG		[+]	**PF0541**	94,9×57,4×16,2	
2.5 TDI	01/98 →			LG	15"	[+]	**PF0416**	91,6×80×18		LG	+1 w.i.	[+]	**PF0586**	94,9×51×16,2	OK032
2.5 TD	09/90 → 06/00			LG	15"	[+]	**PF0528**	129,9×65,2×19	OK030	LG	+2 w.i.	[+]	**PF0258**	94,9×51×16,8	OK030
2.5 TD	97 → 00			ATE	16"	[+]	**PF0539**	156,4×78,7×19		LG		[+]	**PF0541**	94,9×57,4×16,2	
2.5 TD	97 → 00			ATE	16"	[+]	**PF0539**	156,4×78,7×19		LG		[-]	**PF0542**	94,9×57,4×16,2	
2.5 TD 4WD	97 → 00			ATE	16"	[+]	**PF0539**	156,4×78,7×19		LG		[+]	**PF0541**	94,9×57,4×16,2	
2.5 TD 4WD	97 → 00			ATE	16"	[+]	**PF0539**	156,4×78,7×19		LG		[-]	**PF0542**	94,9×57,4×16,2	
2.5 TD	00 →									LG	+2 w.i.	[+]	**PF0258**	94,9×51×16,8	OK030
2.5 TD	00 →									LG		[-]	**PF0420**	94,9×51×16,8	OK032
2.8	96 →			ATE	15"	[-]	**PF0418**	156,5×68,5×19,5		LG		[+]	**PF0541**	94,9×57,4×16,2	
2.8	96 →			ATE	15"	[+]	**PF0419**	156,5×68,5×19,5		LG		[+]	**PF0541**	94,9×57,4×16,2	
2.8 TDI	97 → 12/98			LG	15"	[+]	**PF0416**	91,6×80×18		LG	+1 w.i.	[+]	**PF0586**	94,9×51×16,2	OK032
2.8	09/90 → 06/00			LG	15"	[+]	**PF0528**	129,9×65,2×19	OK030	LG	+2 w.i./15"	[+]	**PF0258**	94,9×51×16,8	OK030
2.8	97 → 00			ATE	16"	[+]	**PF0539**	156,4×78,7×19		LG		[+]	**PF0541**	94,9×57,4×16,2	
2.8	97 → 00			ATE	16"	[+]	**PF0539**	156,4×78,7×19		LG		[-]	**PF0542**	94,9×57,4×16,2	

VOLKSWAGEN

Transporter T5 V Van/Box (7H/7E)

		KW	CV	SiS	i	W.i.	MAGNETI MARELLI	W×H×Th (mm)	Extra kit [Opt]	SiS	i	W.i.	MAGNETI MARELLI	W×H×Th (mm)	Extra kit [Opt]
1.9 TDI	04/03 → 11/09	63	85	ATE	7H4/7HH/ Ø Disc 333/17"	[+]	**PF0413**	155,2×73,5×17,9		LG		[+]	**PF0412**	116,2×59×17,5	OK033/ OK091
1.9 TDI	04/03 → 11/09	63	85	ATE	Ø Disc 308/16"	[+]	**PF0414**	155,2×73,5×17,9		LG		[+]	**PF0412**	116,2×59×17,5	OK033/ OK091
1.9 TDI	04/03 → 11/09	77	105	ATE	7H4/7HH/ Ø Disc 333/17"	[+]	**PF0413**	155,2×73,5×17,9		LG		[+]	**PF0412**	116,2×59×17,5	OK033/ OK091
1.9 TDI	04/03 → 11/09	77	105	ATE	Ø Disc 308/16"	[+]	**PF0414**	155,2×73,5×17,9		LG		[+]	**PF0412**	116,2×59×17,5	OK033/ OK091
1.9 TDI	06/06 → 11/09	75	102	ATE	7H4/7HH/ Ø Disc 333/17"	[+]	**PF0413**	155,2×73,5×17,9		LG		[+]	**PF0412**	116,2×59×17,5	OK033/ OK091
1.9 TDI	06/06 → 11/09	75	102	ATE	Ø Disc 308/16"	[+]	**PF0414**	155,2×73,5×17,9		LG		[+]	**PF0412**	116,2×59×17,5	OK033/ OK091
1.9 TDI	01/06 → 11/09	62	84	ATE	7H4/7HH/ Ø Disc 333/17"	[+]	**PF0413**	155,2×73,5×17,9		LG		[+]	**PF0412**	116,2×59×17,5	OK033/ OK091
1.9 TDI	01/06 → 11/09	62	84	ATE	Ø Disc 308/16"	[+]	**PF0414**	155,2×73,5×17,9		LG		[+]	**PF0412**	116,2×59×17,5	OK033/ OK091
2.0	11/03 →	85	115	ATE	7H4/7HH/ Ø Disc 333/17"	[+]	**PF0413**	155,2×73,5×17,9		LG		[+]	**PF0412**	116,2×59×17,5	OK033/ OK091
2.0	11/03 →	85	115	ATE	Ø Disc 308/16"	[+]	**PF0414**	155,2×73,5×17,9		LG		[+]	**PF0412**	116,2×59×17,5	OK033/ OK091
2.0 BiTDI	09/09 →	132	180	ATE	7H4/7HH/ Ø Disc 333/17"	[+]	**PF0413**	155,2×73,5×17,9		LG		[+]	**PF0412**	116,2×59×17,5	OK033/ OK091
2.0 BiTDI	09/09 →	132	180	ATE	Ø Disc 308/16"	[+]	**PF0414**	155,2×73,5×17,9		LG		[+]	**PF0412**	116,2×59×17,5	OK033/ OK091
2.0 BiTDI 4motion	09/09 →	132	180	ATE	7H4/7HH/ Ø Disc 333/17"	[+]	**PF0413**	155,2×73,5×17,9		LG		[+]	**PF0412**	116,2×59×17,5	OK033/ OK091
2.0 BiTDI 4motion	09/09 →	132	180	ATE	Ø Disc 308/16"	[+]	**PF0414**	155,2×73,5×17,9		LG		[+]	**PF0412**	116,2×59×17,5	OK033/ OK091
2.0 TDI	09/09 →	62	84	ATE	7H4/7HH/ Ø Disc 333/17"	[+]	**PF0413**	155,2×73,5×17,9		LG		[+]	**PF0412**	116,2×59×17,5	OK033/ OK091
2.0 TDI	09/09 →	62	84	ATE	Ø Disc 308/16"	[+]	**PF0414**	155,2×73,5×17,9		LG		[+]	**PF0412**	116,2×59×17,5	OK033/ OK091
2.0 TDI	09/09 →	75	102	ATE	7H4/7HH/ Ø Disc 333/17"	[+]	**PF0413**	155,2×73,5×17,9		LG		[+]	**PF0412**	116,2×59×17,5	OK033/ OK091

		KW	CV												
				SiS	i	W.i.	MAGNETI MARELLI	W×H×Th (mm)	Extra kit [Opt]	SiS	i	W.i.	MAGNETI MARELLI	W×H×Th (mm)	Extra kit [Opt]
VOLKSWAGEN															
Transporter T5 V Van/Box (7H/7E)															
2.0 TDI	09/09 →	75	102	ATE	Ø Disc 308/16"	[+]	**PF0414**	155,2×73,5×17,9		LG		[+]	**PF0412**	116,2×59×17,5	OK033/ OK091
2.0 TDI	09/09 →	103	140	ATE	7H4/7HH/ Ø Disc 333/17"	[+]	**PF0413**	155,2×73,5×17,9		LG		[+]	**PF0412**	116,2×59×17,5	OK033/ OK091
2.0 TDI	09/09 →	103	140	ATE	Ø Disc 308/16"	[+]	**PF0414**	155,2×73,5×17,9		LG		[+]	**PF0412**	116,2×59×17,5	OK033/ OK091
2.0 TDI 4motion	09/09 →	103	140	ATE	7H4/7HH/ Ø Disc 333/17"	[+]	**PF0413**	155,2×73,5×17,9		LG		[+]	**PF0412**	116,2×59×17,5	OK033/ OK091
2.0 TDI 4motion	09/09 →	103	140	ATE	Ø Disc 308/16"	[+]	**PF0414**	155,2×73,5×17,9		LG		[+]	**PF0412**	116,2×59×17,5	OK033/ OK091
2.5	05/03 →	128	174	ATE	7H4/7HH/ Ø Disc 333/17"	[+]	**PF0413**	155,2×73,5×17,9		LG		[+]	**PF0412**	116,2×59×17,5	OK033/ OK091
2.5	05/03 →	128	174	ATE	Ø Disc 308/16"	[+]	**PF0414**	155,2×73,5×17,9		LG		[+]	**PF0412**	116,2×59×17,5	OK033/ OK091
2.5 4motion	06/06 →	96	131	ATE	7H4/7HH/ Ø Disc 333/17"	[+]	**PF0413**	155,2×73,5×17,9		LG		[+]	**PF0412**	116,2×59×17,5	OK033/ OK091
2.5 4motion	06/06 →	96	131	ATE	Ø Disc 308/16"	[+]	**PF0414**	155,2×73,5×17,9		LG		[+]	**PF0412**	116,2×59×17,5	OK033/ OK091
2.5 4motion	06/06 →	128	174	ATE	7H4/7HH/ Ø Disc 333/17"	[+]	**PF0413**	155,2×73,5×17,9		LG		[+]	**PF0412**	116,2×59×17,5	OK033/ OK091
2.5 4motion	06/06 →	128	174	ATE	Ø Disc 308/16"	[+]	**PF0414**	155,2×73,5×17,9		LG		[+]	**PF0412**	116,2×59×17,5	OK033/ OK091
2.5 TDI	04/03 → 11/09	96	130	ATE	7H4/7HH/ Ø Disc 333/17"	[+]	**PF0413**	155,2×73,5×17,9		LG		[+]	**PF0412**	116,2×59×17,5	OK033/ OK091
2.5 TDI	04/03 → 11/09	96	130	ATE	Ø Disc 308/16"	[+]	**PF0414**	155,2×73,5×17,9		LG		[+]	**PF0412**	116,2×59×17,5	OK033/ OK091
2.5 TDI	04/03 → 11/09	128	174	ATE	7H4/7HH/ Ø Disc 333/17"	[+]	**PF0413**	155,2×73,5×17,9		LG		[+]	**PF0412**	116,2×59×17,5	OK033/ OK091
2.5 TDI	04/03 → 11/09	128	174	ATE	Ø Disc 308/16"	[+]	**PF0414**	155,2×73,5×17,9		LG		[+]	**PF0412**	116,2×59×17,5	OK033/ OK091
2.5 TDI 4motion	07/04 → 11/09	96	130	ATE	7H4/7HH/ Ø Disc 333/17"	[+]	**PF0413**	155,2×73,5×17,9		LG		[+]	**PF0412**	116,2×59×17,5	OK033/ OK091
2.5 TDI 4motion	07/04 → 11/09	96	130	ATE	Ø Disc 308/16"	[+]	**PF0414**	155,2×73,5×17,9		LG		[+]	**PF0412**	116,2×59×17,5	OK033/ OK091

		KW	CV													
				SiS	i	W.i.	MAGNETI MARELLI	W×H×Th (mm)	Extra kit [Opt]	SiS	i	W.i.	MAGNETI MARELLI	W×H×Th (mm)	Extra kit [Opt]
VOLKSWAGEN															
Transporter T5 V Van/Box (7H/7E)															
2.5 TDI 4motion	07/04 → 11/09	128	174	ATE	7H4/7HH/ Ø Disc 333/17"	[+]	**PF0413**	155,2×73,5×17,9		LG		[+]	**PF0412**	116,2×59×17,5	OK033/ OK091
2.5 TDI 4motion	07/04 → 11/09	128	174	ATE	Ø Disc 308/16"	[+]	**PF0414**	155,2×73,5×17,9		LG		[+]	**PF0412**	116,2×59×17,5	OK033/ OK091
2.5 TDI PF	06/06 →	96	131	ATE	7H4/7HH/ Ø Disc 333/17"	[+]	**PF0413**	155,2×73,5×17,9		LG		[+]	**PF0412**	116,2×59×17,5	OK033/ OK091
2.5 TDI PF	06/06 →	96	131	ATE	Ø Disc 308/16"	[+]	**PF0414**	155,2×73,5×17,9		LG		[+]	**PF0412**	116,2×59×17,5	OK033/ OK091
3.2 4motion	11/03 → 06/06	170	231	ATE	7H4/7HH/ Ø Disc 333/17"	[+]	**PF0413**	155,2×73,5×17,9		LG		[+]	**PF0412**	116,2×59×17,5	OK033/ OK091
3.2 4motion	11/03 → 06/06	170	231	ATE	Ø Disc 308/16"	[+]	**PF0414**	155,2×73,5×17,9		LG		[+]	**PF0412**	116,2×59×17,5	OK033/ OK091
3.2 4motion	11/03 → 11/09	173	235	ATE	7H4/7HH/ Ø Disc 333/17"	[+]	**PF0413**	155,2×73,5×17,9		LG		[+]	**PF0412**	116,2×59×17,5	OK033/ OK091
3.2 4motion	11/03 → 11/09	173	235	ATE	Ø Disc 308/16"	[+]	**PF0414**	155,2×73,5×17,9		LG		[+]	**PF0412**	116,2×59×17,5	OK033/ OK091
3.2 V6	04/03 → 06/04	170	231	ATE	7H4/7HH/ Ø Disc 333/17"	[+]	**PF0413**	155,2×73,5×17,9		LG		[+]	**PF0412**	116,2×59×17,5	OK033/ OK091
3.2 V6	04/03 → 06/04	170	231	ATE	Ø Disc 308/16"	[+]	**PF0414**	155,2×73,5×17,9		LG		[+]	**PF0412**	116,2×59×17,5	OK033/ OK091
3.2 V6	02/04 → 11/09	173	235	ATE	7H4/7HH/ Ø Disc 333/17"	[+]	**PF0413**	155,2×73,5×17,9		LG		[+]	**PF0412**	116,2×59×17,5	OK033/ OK091
3.2 V6	02/04 → 11/09	173	235	ATE	Ø Disc 308/16"	[+]	**PF0414**	155,2×73,5×17,9		LG		[+]	**PF0412**	116,2×59×17,5	OK033/ OK091
Transporter T5 V Bus (7H/7E)															
1.9 TDI	04/03 → 11/09	63	85	ATE	7H4/7HH/ Ø Disc 333/17"	[+]	**PF0413**	155,2×73,5×17,9		LG		[+]	**PF0412**	116,2×59×17,5	OK033/ OK091
1.9 TDI	04/03 → 11/09	63	85	ATE	Ø Disc 308/16"	[+]	**PF0414**	155,2×73,5×17,9		LG		[+]	**PF0412**	116,2×59×17,5	OK033/ OK091
1.9 TDI	04/03 → 11/09	77	105	ATE	7H4/7HH/ Ø Disc 333/17"	[+]	**PF0413**	155,2×73,5×17,9		LG		[+]	**PF0412**	116,2×59×17,5	OK033/ OK091
1.9 TDI	04/03 → 11/09	77	105	ATE	Ø Disc 308/16"	[+]	**PF0414**	155,2×73,5×17,9		LG		[+]	**PF0412**	116,2×59×17,5	OK033/ OK091
1.9 TDI	06/06 → 11/09	75	102	ATE	7H4/7HH/ Ø Disc 333/17"	[+]	**PF0413**	155,2×73,5×17,9		LG		[+]	**PF0412**	116,2×59×17,5	OK033/ OK091

MAGNETI MARELLI

		KW	CV													
				SiS	i	W.i.	MAGNETI MARELLI	W×H×Th (mm)	Extra kit [Opt]	SiS	i	W.i.	MAGNETI MARELLI	W×H×Th (mm)	Extra kit [Opt]
VOLKSWAGEN															
Transporter T5 V Bus (7H/7E)															
1.9 TDI	06/06 → 11/09	75	102	ATE	Ø Disc 308/16"	[+]	**PF0414**	155,2×73,5×17,9		LG		[+]	**PF0412**	116,2×59×17,5	OK033/ OK091
1.9 TDI	01/06 → 11/09	62	84	ATE	7H4/7HH/ Ø Disc 333/17"	[+]	**PF0413**	155,2×73,5×17,9		LG		[+]	**PF0412**	116,2×59×17,5	OK033/ OK091
1.9 TDI	01/06 → 11/09	62	84	ATE	Ø Disc 308/16"	[+]	**PF0414**	155,2×73,5×17,9		LG		[+]	**PF0412**	116,2×59×17,5	OK033/ OK091
2.0	11/03 →	85	115	ATE	7H4/7HH/ Ø Disc 333/17"	[+]	**PF0413**	155,2×73,5×17,9		LG		[+]	**PF0412**	116,2×59×17,5	OK033/ OK091
2.0	11/03 →	85	115	ATE	Ø Disc 308/16"	[+]	**PF0414**	155,2×73,5×17,9		LG		[+]	**PF0412**	116,2×59×17,5	OK033/ OK091
2.0 BiTDI	09/09 →	132	180	ATE	7H4/7HH/ Ø Disc 333/17"	[+]	**PF0413**	155,2×73,5×17,9		LG		[+]	**PF0412**	116,2×59×17,5	OK033/ OK091
2.0 BiTDI	09/09 →	132	180	ATE	Ø Disc 308/16"	[+]	**PF0414**	155,2×73,5×17,9		LG		[+]	**PF0412**	116,2×59×17,5	OK033/ OK091
2.0 BiTDI 4motion	09/09 →	132	180	ATE	7H4/7HH/ Ø Disc 333/17"	[+]	**PF0413**	155,2×73,5×17,9		LG		[+]	**PF0412**	116,2×59×17,5	OK033/ OK091
2.0 BiTDI 4motion	09/09 →	132	180	ATE	Ø Disc 308/16"	[+]	**PF0414**	155,2×73,5×17,9		LG		[+]	**PF0412**	116,2×59×17,5	OK033/ OK091
2.0 TDI	05/10 →	100	136	ATE	7H4/7HH/ Ø Disc 333/17"	[+]	**PF0413**	155,2×73,5×17,9		LG		[+]	**PF0412**	116,2×59×17,5	OK033/ OK091
2.0 TDI	05/10 →	100	136	ATE	Ø Disc 308/16"	[+]	**PF0414**	155,2×73,5×17,9		LG		[+]	**PF0412**	116,2×59×17,5	OK033/ OK091
2.0 TDI	09/09 →	62	84	ATE	7H4/7HH/ Ø Disc 333/17"	[+]	**PF0413**	155,2×73,5×17,9		LG		[+]	**PF0412**	116,2×59×17,5	OK033/ OK091
2.0 TDI	09/09 →	62	84	ATE	Ø Disc 308/16"	[+]	**PF0414**	155,2×73,5×17,9		LG		[+]	**PF0412**	116,2×59×17,5	OK033/ OK091
2.0 TDI	09/09 →	75	102	ATE	7H4/7HH/ Ø Disc 333/17"	[+]	**PF0413**	155,2×73,5×17,9		LG		[+]	**PF0412**	116,2×59×17,5	OK033/ OK091
2.0 TDI	09/09 →	75	102	ATE	Ø Disc 308/16"	[+]	**PF0414**	155,2×73,5×17,9		LG		[+]	**PF0412**	116,2×59×17,5	OK033/ OK091
2.0 TDI	09/09 →	103	140	ATE	7H4/7HH/ Ø Disc 333/17"	[+]	**PF0413**	155,2×73,5×17,9		LG		[+]	**PF0412**	116,2×59×17,5	OK033/ OK091
2.0 TDI	09/09 →	103	140	ATE	Ø Disc 308/16"	[+]	**PF0414**	155,2×73,5×17,9		LG		[+]	**PF0412**	116,2×59×17,5	OK033/ OK091

VOLKSWAGEN

Transporter T5 V Bus (7H/7E)

		KW	CV	SiS	i	W.i.	MAGNETI MARELLI	W×H×Th (mm)	Extra kit [Opt]	SiS	i	W.i.	MAGNETI MARELLI	W×H×Th (mm)	Extra kit [Opt]
2.0 TDI 4motion	05/10 →	100	136	ATE	7H4/7HH/ Ø Disc 333/17"	[+]	**PF0413**	155,2×73,5×17,9		LG		[+]	**PF0412**	116,2×59×17,5	OK033/ OK091
2.0 TDI 4motion	05/10 →	100	136	ATE	Ø Disc 308/16"	[+]	**PF0414**	155,2×73,5×17,9		LG		[+]	**PF0412**	116,2×59×17,5	OK033/ OK091
2.0 TDI 4motion	09/09 →	103	140	ATE	7H4/7HH/ Ø Disc 333/17"	[+]	**PF0413**	155,2×73,5×17,9		LG		[+]	**PF0412**	116,2×59×17,5	OK033/ OK091
2.0 TDI 4motion	09/09 →	103	140	ATE	Ø Disc 308/16"	[+]	**PF0414**	155,2×73,5×17,9		LG		[+]	**PF0412**	116,2×59×17,5	OK033/ OK091
2.5	05/03 →	128	174	ATE	7H4/7HH/ Ø Disc 333/17"	[+]	**PF0413**	155,2×73,5×17,9		LG		[+]	**PF0412**	116,2×59×17,5	OK033/ OK091
2.5	05/03 →	128	174	ATE	Ø Disc 308/16"	[+]	**PF0414**	155,2×73,5×17,9		LG		[+]	**PF0412**	116,2×59×17,5	OK033/ OK091
2.5 4motion	06/06 →	96	131	ATE	7H4/7HH/ Ø Disc 333/17"	[+]	**PF0413**	155,2×73,5×17,9		LG		[+]	**PF0412**	116,2×59×17,5	OK033/ OK091
2.5 4motion	06/06 →	96	131	ATE	Ø Disc 308/16"	[+]	**PF0414**	155,2×73,5×17,9		LG		[+]	**PF0412**	116,2×59×17,5	OK033/ OK091
2.5 4motion	08/04 →	128	174	ATE	7H4/7HH/ Ø Disc 333/17"	[+]	**PF0413**	155,2×73,5×17,9		LG		[+]	**PF0412**	116,2×59×17,5	OK033/ OK091
2.5 4motion	08/04 →	128	174	ATE	Ø Disc 308/16"	[+]	**PF0414**	155,2×73,5×17,9		LG		[+]	**PF0412**	116,2×59×17,5	OK033/ OK091
2.5 TDI	04/03 → 11/09	96	130	ATE	7H4/7HH/ Ø Disc 333/17"	[+]	**PF0413**	155,2×73,5×17,9		LG		[+]	**PF0412**	116,2×59×17,5	OK033/ OK091
2.5 TDI	04/03 → 11/09	96	130	ATE	Ø Disc 308/16"	[+]	**PF0414**	155,2×73,5×17,9		LG		[+]	**PF0412**	116,2×59×17,5	OK033/ OK091
2.5 TDI	04/03 → 11/09	128	174	ATE	7H4/7HH/ Ø Disc 333/17"	[+]	**PF0413**	155,2×73,5×17,9		LG		[+]	**PF0412**	116,2×59×17,5	OK033/ OK091
2.5 TDI	04/03 → 11/09	128	174	ATE	Ø Disc 308/16"	[+]	**PF0414**	155,2×73,5×17,9		LG		[+]	**PF0412**	116,2×59×17,5	OK033/ OK091
2.5 TDI	11/03 → 11/09	120	163	ATE	7H4/7HH/ Ø Disc 333/17"	[+]	**PF0413**	155,2×73,5×17,9		LG		[+]	**PF0412**	116,2×59×17,5	OK033/ OK091
2.5 TDI	11/03 → 11/09	120	163	ATE	Ø Disc 308/16"	[+]	**PF0414**	155,2×73,5×17,9		LG		[+]	**PF0412**	116,2×59×17,5	OK033/ OK091
2.5 TDI 4motion	07/04 → 11/09	96	130	ATE	7H4/7HH/ Ø Disc 333/17"	[+]	**PF0413**	155,2×73,5×17,9		LG		[+]	**PF0412**	116,2×59×17,5	OK033/ OK091

		KW	CV												
				SiS	i	W.i.	MAGNETI MARELLI	W×H×Th (mm)	Extra kit [Opt]	SiS	i	W.i.	MAGNETI MARELLI	W×H×Th (mm)	Extra kit [Opt]
VOLKSWAGEN															
Transporter T5 V Bus (7H/7E)															
2.5 TDI 4motion	07/04 → 11/09	96	130	ATE	Ø Disc 308/16"	[+]	**PF0414**	155,2×73,5×17,9		LG		[+]	**PF0412**	116,2×59×17,5	OK033/ OK091
2.5 TDI 4motion	07/04 → 11/09	128	174	ATE	7H4/7HH/ Ø Disc 333/17"	[+]	**PF0413**	155,2×73,5×17,9		LG		[+]	**PF0412**	116,2×59×17,5	OK033/ OK091
2.5 TDI 4motion	07/04 → 11/09	128	174	ATE	Ø Disc 308/16"	[+]	**PF0414**	155,2×73,5×17,9		LG		[+]	**PF0412**	116,2×59×17,5	OK033/ OK091
2.5 TDI PF	06/06 →	96	131	ATE	7H4/7HH/ Ø Disc 333/17"	[+]	**PF0413**	155,2×73,5×17,9		LG		[+]	**PF0412**	116,2×59×17,5	OK033/ OK091
2.5 TDI PF	06/06 →	96	131	ATE	Ø Disc 308/16"	[+]	**PF0414**	155,2×73,5×17,9		LG		[+]	**PF0412**	116,2×59×17,5	OK033/ OK091
3.2 4motion	11/03 → 06/06	170	231	ATE	7H4/7HH/ Ø Disc 333/17"	[+]	**PF0413**	155,2×73,5×17,9		LG		[+]	**PF0412**	116,2×59×17,5	OK033/ OK091
3.2 4motion	11/03 → 06/06	170	231	ATE	Ø Disc 308/16"	[+]	**PF0414**	155,2×73,5×17,9		LG		[+]	**PF0412**	116,2×59×17,5	OK033/ OK091
3.2 V6	02/04 → 06/04	170	231	ATE	7H4/7HH/ Ø Disc 333/17"	[+]	**PF0413**	155,2×73,5×17,9		LG		[+]	**PF0412**	116,2×59×17,5	OK033/ OK091
3.2 V6	02/04 → 06/04	170	231	ATE	Ø Disc 308/16"	[+]	**PF0414**	155,2×73,5×17,9		LG		[+]	**PF0412**	116,2×59×17,5	OK033/ OK091
3.2 V6	02/04 → 11/09	173	235	ATE	7H4/7HH/ Ø Disc 333/17"	[+]	**PF0413**	155,2×73,5×17,9		LG		[+]	**PF0412**	116,2×59×17,5	OK033/ OK091
3.2 V6	02/04 → 11/09	173	235	ATE	Ø Disc 308/16"	[+]	**PF0414**	155,2×73,5×17,9		LG		[+]	**PF0412**	116,2×59×17,5	OK033/ OK091
3.2 V6 4motion	11/03 → 11/09	173	235	ATE	7H4/7HH/ Ø Disc 333/17"	[+]	**PF0413**	155,2×73,5×17,9		LG		[+]	**PF0412**	116,2×59×17,5	OK033/ OK091
3.2 V6 4motion	11/03 → 11/09	173	235	ATE	Ø Disc 308/16"	[+]	**PF0414**	155,2×73,5×17,9		LG		[+]	**PF0412**	116,2×59×17,5	OK033/ OK091
Transporter T5 V Pianale (7H/7E)															
1.9 TDI	04/03 → 11/09	63	85	ATE	7H4/7HH/ Ø Disc 333/17"	[+]	**PF0413**	155,2×73,5×17,9		LG		[+]	**PF0412**	116,2×59×17,5	OK033/ OK091
1.9 TDI	04/03 → 11/09	63	85	ATE	Ø Disc 308/16"	[+]	**PF0414**	155,2×73,5×17,9		LG		[+]	**PF0412**	116,2×59×17,5	OK033/ OK091
1.9 TDI	04/03 → 11/09	77	105	ATE	7H4/7HH/ Ø Disc 333/17"	[+]	**PF0413**	155,2×73,5×17,9		LG		[+]	**PF0412**	116,2×59×17,5	OK033/ OK091
1.9 TDI	04/03 → 11/09	77	105	ATE	Ø Disc 308/16"	[+]	**PF0414**	155,2×73,5×17,9		LG		[+]	**PF0412**	116,2×59×17,5	OK033/ OK091

VOLKSWAGEN

Transporter T5 V Pianale (7H/7E)

		KW	CV	SiS	i	W.i.	MAGNETI MARELLI	W×H×Th (mm)	Extra kit [Opt]	SiS	i	W.i.	MAGNETI MARELLI	W×H×Th (mm)	Extra kit [Opt]
1.9 TDI	06/06 → 11/09	75	102	ATE	7H4/7HH/ Ø Disc 333/17"	[+]	**PF0413**	155,2×73,5×17,9		LG		[+]	**PF0412**	116,2×59×17,5	OK033/ OK091
1.9 TDI	06/06 → 11/09	75	102	ATE	Ø Disc 308/16"	[+]	**PF0414**	155,2×73,5×17,9		LG		[+]	**PF0412**	116,2×59×17,5	OK033/ OK091
1.9 TDI	01/06 → 11/09	62	84	ATE	7H4/7HH/ Ø Disc 333/17"	[+]	**PF0413**	155,2×73,5×17,9		LG		[+]	**PF0412**	116,2×59×17,5	OK033/ OK091
1.9 TDI	01/06 → 11/09	62	84	ATE	Ø Disc 308/16"	[+]	**PF0414**	155,2×73,5×17,9		LG		[+]	**PF0412**	116,2×59×17,5	OK033/ OK091
2.0	11/03 →	85	115	ATE	7H4/7HH/ Ø Disc 333/17"	[+]	**PF0413**	155,2×73,5×17,9		LG		[+]	**PF0412**	116,2×59×17,5	OK033/ OK091
2.0	11/03 →	85	115	ATE	Ø Disc 308/16"	[+]	**PF0414**	155,2×73,5×17,9		LG		[+]	**PF0412**	116,2×59×17,5	OK033/ OK091
2.0 BiTDI	09/09 →	132	180	ATE	7H4/7HH/ Ø Disc 333/17"	[+]	**PF0413**	155,2×73,5×17,9		LG		[+]	**PF0412**	116,2×59×17,5	OK033/ OK091
2.0 BiTDI	09/09 →	132	180	ATE	Ø Disc 308/16"	[+]	**PF0414**	155,2×73,5×17,9		LG		[+]	**PF0412**	116,2×59×17,5	OK033/ OK091
2.0 BiTDI 4motion	09/09 →	132	180	ATE	7H4/7HH/ Ø Disc 333/17"	[+]	**PF0413**	155,2×73,5×17,9		LG		[+]	**PF0412**	116,2×59×17,5	OK033/ OK091
2.0 BiTDI 4motion	09/09 →	132	180	ATE	Ø Disc 308/16"	[+]	**PF0414**	155,2×73,5×17,9		LG		[+]	**PF0412**	116,2×59×17,5	OK033/ OK091
2.0 TDI	09/09 →	62	84	ATE	7H4/7HH/ Ø Disc 333/17"	[+]	**PF0413**	155,2×73,5×17,9		LG		[+]	**PF0412**	116,2×59×17,5	OK033/ OK091
2.0 TDI	09/09 →	62	84	ATE	Ø Disc 308/16"	[+]	**PF0414**	155,2×73,5×17,9		LG		[+]	**PF0412**	116,2×59×17,5	OK033/ OK091
2.0 TDI	09/09 →	75	102	ATE	7H4/7HH/ Ø Disc 333/17"	[+]	**PF0413**	155,2×73,5×17,9		LG		[+]	**PF0412**	116,2×59×17,5	OK033/ OK091
2.0 TDI	09/09 →	75	102	ATE	Ø Disc 308/16"	[+]	**PF0414**	155,2×73,5×17,9		LG		[+]	**PF0412**	116,2×59×17,5	OK033/ OK091
2.0 TDI	09/09 →	103	140	ATE	7H4/7HH/ Ø Disc 333/17"	[+]	**PF0413**	155,2×73,5×17,9		LG		[+]	**PF0412**	116,2×59×17,5	OK033/ OK091
2.0 TDI	09/09 →	103	140	ATE	Ø Disc 308/16"	[+]	**PF0414**	155,2×73,5×17,9		LG		[+]	**PF0412**	116,2×59×17,5	OK033/ OK091
2.0 TDI 4motion	09/09 →	103	140	ATE	7H4/7HH/ Ø Disc 333/17"	[+]	**PF0413**	155,2×73,5×17,9		LG		[+]	**PF0412**	116,2×59×17,5	OK033/ OK091

		KW	CV													
				SiS	i	W.i.	MAGNETI MARELLI	W×H×Th (mm)	Extra kit [Opt]	SiS	i	W.i.	MAGNETI MARELLI	W×H×Th (mm)	Extra kit [Opt]
VOLKSWAGEN															
Transporter T5 V Pianale (7H/7E)															
2.0 TDI 4motion	09/09 →	103	140	ATE	Ø Disc 308/16"	[+]	**PF0414**	155,2×73,5×17,9		LG		[+]	**PF0412**	116,2×59×17,5	OK033/ OK091
2.5 TDI	04/03 → 11/09	96	130	ATE	7H4/7HH/ Ø Disc 333/17"	[+]	**PF0413**	155,2×73,5×17,9		LG		[+]	**PF0412**	116,2×59×17,5	OK033/ OK091
2.5 TDI	04/03 → 11/09	96	130	ATE	Ø Disc 308/16"	[+]	**PF0414**	155,2×73,5×17,9		LG		[+]	**PF0412**	116,2×59×17,5	OK033/ OK091
2.5 TDI	04/03 → 11/09	128	174	ATE	7H4/7HH/ Ø Disc 333/17"	[+]	**PF0413**	155,2×73,5×17,9		LG		[+]	**PF0412**	116,2×59×17,5	OK033/ OK091
2.5 TDI	04/03 → 11/09	128	174	ATE	Ø Disc 308/16"	[+]	**PF0414**	155,2×73,5×17,9		LG		[+]	**PF0412**	116,2×59×17,5	OK033/ OK091
2.5 TDI 4motion	07/04 → 11/09	96	130	ATE	7H4/7HH/ Ø Disc 333/17"	[+]	**PF0413**	155,2×73,5×17,9		LG		[+]	**PF0412**	116,2×59×17,5	OK033/ OK091
2.5 TDI 4motion	07/04 → 11/09	96	130	ATE	Ø Disc 308/16"	[+]	**PF0414**	155,2×73,5×17,9		LG		[+]	**PF0412**	116,2×59×17,5	OK033/ OK091
2.5 TDI 4motion	10/03 →	96	131	ATE	7H4/7HH/ Ø Disc 333/17"	[+]	**PF0413**	155,2×73,5×17,9		LG		[+]	**PF0412**	116,2×59×17,5	OK033/ OK091
2.5 TDI 4motion	10/03 →	96	131	ATE	Ø Disc 308/16"	[+]	**PF0414**	155,2×73,5×17,9		LG		[+]	**PF0412**	116,2×59×17,5	OK033/ OK091
2.5 TDI 4motion	05/03 →	128	174	ATE	7H4/7HH/ Ø Disc 333/17"	[+]	**PF0413**	155,2×73,5×17,9		LG		[+]	**PF0412**	116,2×59×17,5	OK033/ OK091
2.5 TDI 4motion	05/03 →	128	174	ATE	Ø Disc 308/16"	[+]	**PF0414**	155,2×73,5×17,9		LG		[+]	**PF0412**	116,2×59×17,5	OK033/ OK091
3.2 4motion	11/03 → 11/09	170	231	ATE	7H4/7HH/ Ø Disc 333/17"	[+]	**PF0413**	155,2×73,5×17,9		LG		[+]	**PF0412**	116,2×59×17,5	OK033/ OK091
3.2 4motion	11/03 → 11/09	170	231	ATE	Ø Disc 308/16"	[+]	**PF0414**	155,2×73,5×17,9		LG		[+]	**PF0412**	116,2×59×17,5	OK033/ OK091
3.2 V6	02/04 → 11/09	170	231	ATE	7H4/7HH/ Ø Disc 333/17"	[+]	**PF0413**	155,2×73,5×17,9		LG		[+]	**PF0412**	116,2×59×17,5	OK033/ OK091
3.2 V6	02/04 → 11/09	170	231	ATE	Ø Disc 308/16"	[+]	**PF0414**	155,2×73,5×17,9		LG		[+]	**PF0412**	116,2×59×17,5	OK033/ OK091
3.2 V6	08/03 → 05/06	173	235	ATE	7H4/7HH/ Ø Disc 333/17"	[+]	**PF0413**	155,2×73,5×17,9		LG		[+]	**PF0412**	116,2×59×17,5	OK033/ OK091
3.2 V6	08/03 → 05/06	173	235	ATE	Ø Disc 308/16"	[+]	**PF0414**	155,2×73,5×17,9		LG		[+]	**PF0412**	116,2×59×17,5	OK033/ OK091

		KW	CV	SiS	i	W.i.	MAGNETI MARELLI	W×H×Th (mm)	Extra kit [Opt]	SiS	i	W.i.	MAGNETI MARELLI	W×H×Th (mm)	Extra kit [Opt]
VOLKSWAGEN															
Up!															
e-Up	07/13→	60	82	ATE		[-]	**PF0134**	146×54,7×19,5							
1.0	01/12→	44	60	ATE		[-]	**PF0134**	146×54,7×19,5							
1.0 EcoFuel	11/12→	50	68	ATE		[-]	**PF0134**	146×54,7×19,5							
1.0	01/14→	56	75	ATE		[-]	**PF0134**	146×54,7×19,5							
1.0 Flex	01/14→	62	82	ATE		[-]	**PF0134**	146×54,7×19,5							
1.0	01/12→	55	75	ATE		[-]	**PF0134**	146×54,7×19,5							
Vento (1H)															
1.4i CL	92→			KH		[-]	**PF0392**	138×49×19,5		LG	+Rear Disc	[-]	**PF0144**	87×53×15	OK039
1.6i CL	92→			KH		[-]	**PF0392**	138×49×19,5		LG	+Rear Disc	[-]	**PF0144**	87×53×15	OK039
1.6 GL	95→			ATE		[-]	**PF0388**	137,8×49×17		LG	+Rear Disc	[-]	**PF0144**	87×53×15	OK039
1.6 GL	95→			ATE		[-]	**PF0390**	137,8×49×19,5		LG	+Rear Disc	[-]	**PF0144**	87×53×15	OK039
1.8i CI/GL	92→			KH		[-]	**PF0392**	138×49×19,5		LG	+Rear Disc	[-]	**PF0144**	87×53×15	OK039
1.8i 20V	96→									LG	+Rear Disc	[-]	**PF0144**	87×53×15	OK039
1.8i 20V	96→									LG	+Rear Disc	[-]	**PF0144**	87×53×15	OK039
1.8i GT	92→			LG		[-]	**PF0806**	119×69,7×16	OK030	LG	+Rear Disc	[-]	**PF0144**	87×53×15	OK039
1.9D CL/GL	92→			KH		[-]	**PF0392**	138×49×19,5		LG	+Rear Disc	[-]	**PF0144**	87×53×15	OK039
1.9 TD CL - GL - GTD	92→			KH		[-]	**PF0392**	138×49×19,5		LG	+Rear Disc	[-]	**PF0144**	87×53×15	OK039
1.9 TD TDI - GL	95→			ATE		[-]	**PF0388**	137,8×49×17		LG	+Rear Disc	[-]	**PF0144**	87×53×15	OK039
1.9 TD TDI - GL	95→			ATE		[-]	**PF0390**	137,8×49×19,5		LG	+Rear Disc	[-]	**PF0144**	87×53×15	OK039
1.9id TD TDI	93→									LG	+Rear Disc	[-]	**PF0144**	87×53×15	OK039
2.0i Gti 16V	96→98		150	ATE		[-]	**PF0137**	156,4×74,2×19		LG	+Rear Disc	[-]	**PF0144**	87×53×15	OK039
2.0i 16V GTI	92→									LG	+Rear Disc	[-]	**PF0144**	87×53×15	OK039
2.0i GTI	92→									LG	+Rear Disc	[-]	**PF0144**	87×53×15	OK039
2.8i VR6	92→									LG	+Rear Disc	[-]	**PF0144**	87×53×15	OK039
2.8i VR6	96→98		175	ATE		[-]	**PF0137**	156,4×74,2×19		LG	+Rear Disc	[-]	**PF0131**	87×53×17	OK039/ OK041
2.8i VR6	92→			ATE		[-]	**PF0130**	156,4×74,2×19		LG	+Rear Disc	[-]	**PF0144**	87×53×15	OK039
VOLVO															
C30															
1.6	10/06→	74	100	ATE		[-]	**PF0244**	155,2×62,3×18,2		ATE		[-]	**PF0431**	123,1×52×16,4	
1.6	10/06→	74	100	ATE		[-]	**PF0244**	155,2×62,3×18,2		ATE	U.S.A./ Canada/ Giappone	[-]	**PF0820**	123,1×52×16,4	
1.6 D	10/06→	80	109	ATE		[-]	**PF0244**	155,2×62,3×18,2		ATE		[-]	**PF0431**	123,1×52×16,4	
1.6 D	10/06→	80	109	ATE		[-]	**PF0244**	155,2×62,3×18,2		ATE	U.S.A./ Canada/ Giappone	[-]	**PF0820**	123,1×52×16,4	
1.6 D2	10/10→	84	115	ATE		[-]	**PF0244**	155,2×62,3×18,2		ATE		[-]	**PF0431**	123,1×52×16,4	
1.6 D2	10/10→	84	115	ATE		[-]	**PF0244**	155,2×62,3×18,2		ATE	U.S.A./ Canada/ Giappone	[-]	**PF0820**	123,1×52×16,4	
1.8	10/06→	92	125	ATE		[-]	**PF0244**	155,2×62,3×18,2		ATE		[-]	**PF0431**	123,1×52×16,4	

		KW	CV	SiS	i	W.i.	MAGNETI MARELLI	W×H×Th (mm)	Extra kit [Opt]	SiS	i	W.i.	MAGNETI MARELLI	W×H×Th (mm)	Extra kit [Opt]
VOLVO															
C30															
1.8	10/06 →	92	125	ATE		[-]	**PF0244**	155,2×62,3×18,2		ATE	U.S.A./ Canada/ Giappone	[-]	**PF0820**	123,1×52×16,4	
1.8 FlexFuel	01/07 →	92	125	ATE		[-]	**PF0244**	155,2×62,3×18,2		ATE		[-]	**PF0431**	123,1×52×16,4	
1.8 FlexFuel	01/07 →	92	125	ATE		[-]	**PF0244**	155,2×62,3×18,2		ATE	U.S.A./ Canada/ Giappone	[-]	**PF0820**	123,1×52×16,4	
2.0	10/06 →	107	145	ATE		[-]	**PF0244**	155,2×62,3×18,2		ATE		[-]	**PF0431**	123,1×52×16,4	
2.0	10/06 →	107	145	ATE		[-]	**PF0244**	155,2×62,3×18,2		ATE	U.S.A./ Canada/ Giappone	[-]	**PF0820**	123,1×52×16,4	
2.0 D	10/06 →	100	136	ATE		[-]	**PF0244**	155,2×62,3×18,2		ATE		[-]	**PF0431**	123,1×52×16,4	
2.0 D	10/06 →	100	136	ATE		[-]	**PF0244**	155,2×62,3×18,2		ATE	U.S.A./ Canada/ Giappone	[-]	**PF0820**	123,1×52×16,4	
2.0 FlexFuel	01/10 →	107	146	ATE		[-]	**PF0244**	155,2×62,3×18,2		ATE		[-]	**PF0431**	123,1×52×16,4	
2.0 FlexFuel	01/10 →	107	146	ATE		[-]	**PF0244**	155,2×62,3×18,2		ATE	U.S.A./ Canada/ Giappone	[-]	**PF0820**	123,1×52×16,4	
2.4 i	10/06 →	125	170	ATE		[-]	**PF0244**	155,2×62,3×18,2		ATE		[-]	**PF0431**	123,1×52×16,4	
2.4 i	10/06 →	125	170	ATE		[-]	**PF0244**	155,2×62,3×18,2		ATE	U.S.A./ Canada/ Giappone	[-]	**PF0820**	123,1×52×16,4	
D3	10/10 →	110	150	ATE		[-]	**PF0244**	155,2×62,3×18,2		ATE		[-]	**PF0431**	123,1×52×16,4	
D3	10/10 →	110	150	ATE		[-]	**PF0244**	155,2×62,3×18,2		ATE	U.S.A./ Canada/ Giappone	[-]	**PF0820**	123,1×52×16,4	
D4	10/10 →	130	177	ATE		[-]	**PF0244**	155,2×62,3×18,2		ATE		[-]	**PF0431**	123,1×52×16,4	
D4	10/10 →	130	177	ATE		[-]	**PF0244**	155,2×62,3×18,2		ATE	U.S.A./ Canada/ Giappone	[-]	**PF0820**	123,1×52×16,4	
D5	10/06 →	132	180	ATE		[-]	**PF0244**	155,2×62,3×18,2		ATE		[-]	**PF0431**	123,1×52×16,4	
D5	10/06 →	132	180	ATE		[-]	**PF0244**	155,2×62,3×18,2		ATE	U.S.A./ Canada/ Giappone	[-]	**PF0820**	123,1×52×16,4	
D5	10/06 →	120	163	ATE		[-]	**PF0244**	155,2×62,3×18,2		ATE		[-]	**PF0431**	123,1×52×16,4	
D5	10/06 →	120	163	ATE		[-]	**PF0244**	155,2×62,3×18,2		ATE	U.S.A./ Canada/ Giappone	[-]	**PF0820**	123,1×52×16,4	
T5	10/06 →	162	220	ATE		[-]	**PF0244**	155,2×62,3×18,2		ATE		[-]	**PF0431**	123,1×52×16,4	
T5	10/06 →	162	220	ATE		[-]	**PF0244**	155,2×62,3×18,2		ATE	U.S.A./ Canada/ Giappone	[-]	**PF0820**	123,1×52×16,4	
T5	03/07 →	169	230	ATE		[-]	**PF0244**	155,2×62,3×18,2		ATE		[-]	**PF0431**	123,1×52×16,4	

		KW	CV	SiS	i	W.i.	MAGNETI MARELLI	W×H×Th (mm)	Extra kit [Opt]	SiS	i	W.i.	MAGNETI MARELLI	W×H×Th (mm)	Extra kit [Opt]
VOLVO															
C30															
T5	03/07 →	169	230	ATE		[-]	**PF0244**	155,2×62,3×18,2		ATE	U.S.A./ Canada/ Giappone	[-]	**PF0820**	123,1×52×16,4	
C70 II															
2.4	03/06 → 14			ATE	17"	[-]	**PF0608**	156,5×72,9×18,5		ATE		[-]	**PF0431**	123,1×52×16,4	
2.4	03/06 → 14			ATE	15"/16"	[-]	**PF0244**	155,2×62,3×18,2		ATE		[-]	**PF0431**	123,1×52×16,4	
2.4i	03/06 → 14			ATE	17"	[-]	**PF0608**	156,5×72,9×18,5		ATE		[-]	**PF0431**	123,1×52×16,4	
2.4i	03/06 → 14			ATE	15"/16"	[-]	**PF0244**	155,2×62,3×18,2		ATE		[-]	**PF0431**	123,1×52×16,4	
2.4 D5	03/06 → 14			ATE	17"	[-]	**PF0608**	156,5×72,9×18,5		ATE		[-]	**PF0431**	123,1×52×16,4	
D5	03/06 → 14			ATE	15"/16"	[-]	**PF0244**	155,2×62,3×18,2		ATE		[-]	**PF0431**	123,1×52×16,4	
2.5 T5	03/06 → 14			ATE	17"	[-]	**PF0608**	156,5×72,9×18,5		ATE		[-]	**PF0431**	123,1×52×16,4	
T5	03/06 → 14			ATE	15"/16"	[-]	**PF0244**	155,2×62,3×18,2		ATE		[-]	**PF0431**	123,1×52×16,4	
S40 I (VS)															
1.6	09/95 → 08/99	77	105	LG		[+]	**PF0334**	130×72,6×15,5	OK012	LG		[+]	**PF0336**	87×47×16,5	OK030
1.6	03/99 → 12/03	80	109	LG		[+]	**PF0334**	130×72,6×15,5	OK012	LG		[+]	**PF0336**	87×47×16,5	OK030
1.8	07/95 → 08/99	85	115	LG		[+]	**PF0334**	130×72,6×15,5	OK012	LG		[+]	**PF0336**	87×47×16,5	OK030
1.8	03/99 → 12/03	90	122	LG		[+]	**PF0334**	130×72,6×15,5	OK012	LG		[+]	**PF0336**	87×47×16,5	OK030
1.8	06/01 → 08/03	85	116	LG		[+]	**PF0334**	130×72,6×15,5	OK012	LG		[+]	**PF0336**	87×47×16,5	OK030
1.8 i	03/98 → 12/03	92	125	LG		[+]	**PF0334**	130×72,6×15,5	OK012	LG		[+]	**PF0336**	87×47×16,5	OK030
1.8 i	06/01 → 12/03	90	122	LG		[+]	**PF0334**	130×72,6×15,5	OK012	LG		[+]	**PF0336**	87×47×16,5	OK030
1.9 DI	03/99 → 07/00	70	95	LG		[+]	**PF0334**	130×72,6×15,5	OK012	LG		[+]	**PF0336**	87×47×16,5	OK030
1.9 DI	07/00 → 12/03	75	102	LG		[+]	**PF0334**	130×72,6×15,5	OK012	LG		[+]	**PF0336**	87×47×16,5	OK030
1.9 DI	07/00 → 12/03	85	115	LG		[+]	**PF0334**	130×72,6×15,5	OK012	LG		[+]	**PF0336**	87×47×16,5	OK030
1.9 T4	05/97 → 07/00	147	200	LG		[+]	**PF0334**	130×72,6×15,5	OK012	LG		[+]	**PF0336**	87×47×16,5	OK030
1.9 TD	07/95 → 08/99	66	90	LG		[+]	**PF0334**	130×72,6×15,5	OK012	LG		[+]	**PF0336**	87×47×16,5	OK030
2.0	07/95 → 12/03	100	136	LG		[+]	**PF0334**	130×72,6×15,5	OK012	LG		[+]	**PF0336**	87×47×16,5	OK030
2.0	07/95 → 08/99	103	140	LG		[+]	**PF0334**	130×72,6×15,5	OK012	LG		[+]	**PF0336**	87×47×16,5	OK030
2.0 T	10/97 → 07/00	118	160	LG		[+]	**PF0334**	130×72,6×15,5	OK012	LG		[+]	**PF0336**	87×47×16,5	OK030
2.0 T	07/00 → 06/01	121	165	LG		[+]	**PF0334**	130×72,6×15,5	OK012	LG		[+]	**PF0336**	87×47×16,5	OK030
2.0 T	06/01 → 12/03	120	163	LG		[+]	**PF0334**	130×72,6×15,5	OK012	LG		[+]	**PF0336**	87×47×16,5	OK030
2.0 T4	07/00 → 12/03	147	200	LG		[+]	**PF0334**	130×72,6×15,5	OK012	LG		[+]	**PF0336**	87×47×16,5	OK030
S40 II (MS)															
1.6	01/05 →	74	101	LG		[+]	**PF0335**	130×78,1×17,3	OK030	LG		[+]	**PF0336**	87×47×16,5	OK030
1.6 D	01/05 →	81	110	ATE		[-]	**PF0244**	155,2×62,3×18,2		ATE		[-]	**PF0431**	123,1×52×16,4	
1.6 D2	10/10 →	84	115	LG		[+]	**PF0335**	130×78,1×17,3	OK030	LG		[+]	**PF0336**	87×47×16,5	OK030
1.8	04/04 →	92	125	ATE		[-]	**PF0244**	155,2×62,3×18,2		ATE		[-]	**PF0431**	123,1×52×16,4	
1.8 FlexFuel	01/06 →	92	125	LG		[+]	**PF0335**	130×78,1×17,3	OK030	LG		[+]	**PF0336**	87×47×16,5	OK030
2.0	10/06 →	107	146	ATE		[-]	**PF0244**	155,2×62,3×18,2		ATE		[-]	**PF0431**	123,1×52×16,4	
2.0	03/06 →	107	145	LG		[+]	**PF0335**	130×78,1×17,3	OK030	LG		[+]	**PF0336**	87×47×16,5	OK030
2.0 D	01/04 →	100	136	LG		[+]	**PF0335**	130×78,1×17,3	OK030	LG		[+]	**PF0336**	87×47×16,5	OK030
2.0 D4	07/05 →	96	131	LG		[+]	**PF0335**	130×78,1×17,3	OK030	LG		[+]	**PF0336**	87×47×16,5	OK030
2.0 F	10/06 →	107	146	LG		[+]	**PF0335**	130×78,1×17,3	OK030	LG		[+]	**PF0336**	87×47×16,5	OK030
2.4	01/04 →	103	140	ATE		[-]	**PF0244**	155,2×62,3×18,2		ATE		[-]	**PF0431**	123,1×52×16,4	
2.4	01/04 →	125	170	ATE		[-]	**PF0244**	155,2×62,3×18,2		ATE		[-]	**PF0431**	123,1×52×16,4	

MAGNETI MARELLI

		KW	CV	SiS	i	W.i.	MAGNETI MARELLI	W×H×Th (mm)	Extra kit [Opt]	SiS	i	W.i.	MAGNETI MARELLI	W×H×Th (mm)	Extra kit [Opt]
VOLVO															
S40 II (MS)															
2.4 AWD	08/06 →	125	170	ATE		[-]	**PF0244**	155,2×62,3×18,2		ATE		[-]	**PF0431**	123,1×52×16,4	
2.4 D5	03/06 →	132	179	LG		[+]	**PF0335**	130×78,1×17,3	OK030	LG		[+]	**PF0336**	87×47×16,5	OK030
D3	10/10 →	110	150	LG		[+]	**PF0335**	130×78,1×17,3	OK030	LG		[+]	**PF0336**	87×47×16,5	OK030
D4	10/10 →	130	177	LG		[+]	**PF0335**	130×78,1×17,3	OK030	LG		[+]	**PF0336**	87×47×16,5	OK030
T5	01/04 →	162	220	LG		[+]	**PF0335**	130×78,1×17,3	OK030	LG		[+]	**PF0336**	87×47×16,5	OK030
T5	03/07 →	169	230	LG		[+]	**PF0335**	130×78,1×17,3	OK030	LG		[+]	**PF0336**	87×47×16,5	OK030
T5 AWD	04/04 →	162	220	LG		[+]	**PF0335**	130×78,1×17,3	OK030	LG		[+]	**PF0336**	87×47×16,5	OK030
T5 AWD	03/07 →	169	230	LG		[+]	**PF0335**	130×78,1×17,3	OK030	LG		[+]	**PF0336**	87×47×16,5	OK030
S40 II (MS) Polizia															
1.6	01/05 →	74	101	ATE	17"	[+]	**PF0611**	156,5×72,9×18,5		ATE		[-]	**PF0431**	123,1×52×16,4	
1.6 D	01/05 →	81	110	ATE	17"	[+]	**PF0611**	156,5×72,9×18,5		ATE		[-]	**PF0431**	123,1×52×16,4	
1.6 D2	10/10 →	84	115	ATE	17"	[+]	**PF0611**	156,5×72,9×18,5		ATE		[-]	**PF0431**	123,1×52×16,4	
1.8	04/04 →	92	125	ATE	17"	[+]	**PF0611**	156,5×72,9×18,5		ATE		[-]	**PF0431**	123,1×52×16,4	
1.8 FlexFuel	01/06 →	92	125	ATE	17"	[+]	**PF0611**	156,5×72,9×18,5		ATE		[-]	**PF0431**	123,1×52×16,4	
2.0	10/06 →	107	146	ATE	17"	[+]	**PF0611**	156,5×72,9×18,5		ATE		[-]	**PF0431**	123,1×52×16,4	
2.0	03/06 →	107	145	ATE	17"	[+]	**PF0611**	156,5×72,9×18,5		ATE		[-]	**PF0431**	123,1×52×16,4	
2.0 D	01/04 →	100	136	ATE	17"	[+]	**PF0611**	156,5×72,9×18,5		ATE		[-]	**PF0431**	123,1×52×16,4	
2.0 D4	07/05 →	96	131	ATE	17"	[+]	**PF0611**	156,5×72,9×18,5		ATE		[-]	**PF0431**	123,1×52×16,4	
2.0 F	10/06 →	107	146	ATE	17"	[+]	**PF0611**	156,5×72,9×18,5		ATE		[-]	**PF0431**	123,1×52×16,4	
2.4	01/04 →	103	140	ATE	17"	[+]	**PF0611**	156,5×72,9×18,5		ATE		[-]	**PF0431**	123,1×52×16,4	
2.4	01/04 →	125	170	ATE	17"	[+]	**PF0611**	156,5×72,9×18,5		ATE		[-]	**PF0431**	123,1×52×16,4	
2.4 AWD	08/06 →	125	170	ATE	17"	[+]	**PF0611**	156,5×72,9×18,5		ATE		[-]	**PF0431**	123,1×52×16,4	
2.4 D5	03/06 →	132	179	ATE	17"	[+]	**PF0611**	156,5×72,9×18,5		ATE		[-]	**PF0431**	123,1×52×16,4	
D3	10/10 →	110	150	ATE	17"	[+]	**PF0611**	156,5×72,9×18,5		ATE		[-]	**PF0431**	123,1×52×16,4	
D4	10/10 →	130	177	ATE	17"	[+]	**PF0611**	156,5×72,9×18,5		ATE		[-]	**PF0431**	123,1×52×16,4	
T5	01/04 →	162	220	ATE	17"	[+]	**PF0611**	156,5×72,9×18,5		ATE		[-]	**PF0431**	123,1×52×16,4	
T5	03/07 →	169	230	ATE	17"	[+]	**PF0611**	156,5×72,9×18,5		ATE		[-]	**PF0431**	123,1×52×16,4	
T5 AWD	04/04 →	162	220	ATE	17"	[+]	**PF0611**	156,5×72,9×18,5		ATE		[-]	**PF0431**	123,1×52×16,4	
T5 AWD	03/07 →	169	230	ATE	17"	[+]	**PF0611**	156,5×72,9×18,5		ATE		[-]	**PF0431**	123,1×52×16,4	
S60															
2.0i 20V	11/00 → 10			ATE		[-]	**PF0422**	155,4×69×18,5		ATE		[-]	**PF0543**	122,6×53,8×17	
2.0i 20V	11/00 → 10									ATE		[-]	**PF0543**	122,6×53,8×17	
2.0i T.	01 → 10			ATE		[-]	**PF0422**	155,4×69×18,5		ATE		[-]	**PF0543**	122,6×53,8×17	
2.0i T.	01 → 10									ATE		[-]	**PF0543**	122,6×53,8×17	
2.3i 20V T.	11/00 → 10			ATE		[-]	**PF0422**	155,4×69×18,5		ATE		[-]	**PF0543**	122,6×53,8×17	
2.3i 20V T.	11/00 → 10									ATE		[-]	**PF0543**	122,6×53,8×17	
2.3i T5	00 → 10			ATE		[-]	**PF0422**	155,4×69×18,5		ATE		[-]	**PF0543**	122,6×53,8×17	
2.3i T5	00 → 10									ATE		[-]	**PF0543**	122,6×53,8×17	
2.4i 20V	11/00 → 10			ATE		[-]	**PF0422**	155,4×69×18,5		ATE		[-]	**PF0543**	122,6×53,8×17	
2.4i 20V	11/00 → 10									ATE		[-]	**PF0543**	122,6×53,8×17	
2.4i 20V T.	11/00 → 10			ATE		[-]	**PF0422**	155,4×69×18,5		ATE		[-]	**PF0543**	122,6×53,8×17	
2.4i 20V T.	11/00 → 10									ATE		[-]	**PF0543**	122,6×53,8×17	
2.4 Bi-fuel	02 → 10			ATE		[-]	**PF0422**	155,4×69×18,5		ATE		[-]	**PF0543**	122,6×53,8×17	
2.4 Bi-fuel	02 → 10									ATE		[-]	**PF0543**	122,6×53,8×17	

		KW	CV	SiS	i	W.i.	MAGNETI MARELLI	W×H×Th (mm)	Extra kit [Opt]	SiS	i	W.i.	MAGNETI MARELLI	W×H×Th (mm)	Extra kit [Opt]
VOLVO															
S60															
2.4 T. AWD	01→10			ATE		[-]	**PF0422**	155,4×69×18,5		ATE		[-]	**PF0543**	122,6×53,8×17	
2.4 T. AWD	01→10									ATE		[-]	**PF0543**	122,6×53,8×17	
2.4iD 20V	11/00→10			ATE		[-]	**PF0422**	155,4×69×18,5		ATE		[-]	**PF0543**	122,6×53,8×17	
2.4iD 20V	11/00→10									ATE		[-]	**PF0543**	122,6×53,8×17	
R 2.5i T. AWD	03→10			BR		[-]	**PF0499**	131,8×77,3×15,8		ATE		[-]	**PF0543**	122,6×53,8×17	
S60 II															
1.6 D	01/11→	84	114	ATE	16"	[-]	**PF0263**	155,2×66,6×19,2		LG	+EPB	[-]	**PF0264**	106,3×48,6×16,8	OK030/ OK083
1.6 D	01/11→	84	114	ATE	17"	[-]	**PF0797**	155,2×74,9×19,8		LG	+EPB	[-]	**PF0264**	106,3×48,6×16,8	OK030/ OK083
2.0 T	04/10→	149	203	ATE	16"	[-]	**PF0263**	155,2×66,6×19,2		LG	+EPB	[-]	**PF0264**	106,3×48,6×16,8	OK030/ OK083
2.0 T	04/10→	149	203	ATE	17"	[-]	**PF0797**	155,2×74,9×19,8		LG	+EPB	[-]	**PF0264**	106,3×48,6×16,8	OK030/ OK083
D3	04/10→	120	163	ATE	16"	[-]	**PF0263**	155,2×66,6×19,2		LG	+EPB	[-]	**PF0264**	106,3×48,6×16,8	OK030/ OK083
D3	04/10→	120	163	ATE	17"	[-]	**PF0797**	155,2×74,9×19,8		LG	+EPB	[-]	**PF0264**	106,3×48,6×16,8	OK030/ OK083
D4	09/13→	133	181	ATE	16"	[-]	**PF0263**	155,2×66,6×19,2		LG	+EPB	[-]	**PF0264**	106,3×48,6×16,8	OK030/ OK083
D4	09/13→	133	181	ATE	17"	[-]	**PF0797**	155,2×74,9×19,8		LG	+EPB	[-]	**PF0264**	106,3×48,6×16,8	OK030/ OK083
D5	06/11→	158	215	ATE	16"	[-]	**PF0263**	155,2×66,6×19,2		LG	+EPB	[-]	**PF0264**	106,3×48,6×16,8	OK030/ OK083
D5	06/11→	158	215	ATE	17"	[-]	**PF0797**	155,2×74,9×19,8		LG	+EPB	[-]	**PF0264**	106,3×48,6×16,8	OK030/ OK083
D5	04/10→	151	205	ATE	16"	[-]	**PF0263**	155,2×66,6×19,2		LG	+EPB	[-]	**PF0264**	106,3×48,6×16,8	OK030/ OK083
D5	04/10→	151	205	ATE	17"	[-]	**PF0797**	155,2×74,9×19,8		LG	+EPB	[-]	**PF0264**	106,3×48,6×16,8	OK030/ OK083
D5 AWD	06/11→	158	215	ATE	16"	[-]	**PF0263**	155,2×66,6×19,2		LG	+EPB	[-]	**PF0264**	106,3×48,6×16,8	OK030/ OK083
D5 AWD	06/11→	158	215	ATE	17"	[-]	**PF0797**	155,2×74,9×19,8		LG	+EPB	[-]	**PF0264**	106,3×48,6×16,8	OK030/ OK083
D5 AWD	04/10→	151	205	ATE	16"	[-]	**PF0263**	155,2×66,6×19,2		LG	+EPB	[-]	**PF0264**	106,3×48,6×16,8	OK030/ OK083
D5 AWD	04/10→	151	205	ATE	17"	[-]	**PF0797**	155,2×74,9×19,8		LG	+EPB	[-]	**PF0264**	106,3×48,6×16,8	OK030/ OK083
T3	04/10→	110	150	ATE	16"	[-]	**PF0263**	155,2×66,6×19,2		LG	+EPB	[-]	**PF0264**	106,3×48,6×16,8	OK030/ OK083
T3	04/10→	110	150	ATE	17"	[-]	**PF0797**	155,2×74,9×19,8		LG	+EPB	[-]	**PF0264**	106,3×48,6×16,8	OK030/ OK083
T4	04/10→	132	180	ATE	16"	[-]	**PF0263**	155,2×66,6×19,2		LG	+EPB	[-]	**PF0264**	106,3×48,6×16,8	OK030/ OK083

		KW	CV													
				SiS	i	W.i.	MAGNETI MARELLI	W×H×Th (mm)	Extra kit [Opt]	SiS	i	W.i.	MAGNETI MARELLI	W×H×Th (mm)	Extra kit [Opt]
VOLVO																
S60 II																
T4	04/10→	132	180	ATE	17"	[-]	**PF0797**	155,2×74,9×19,8		LG	+EPB	[-]	**PF0264**	106,3×48,6×16,8	OK030/ OK083
T4F	04/11→	132	180	ATE	16"	[-]	**PF0263**	155,2×66,6×19,2		LG	+EPB	[-]	**PF0264**	106,3×48,6×16,8	OK030/ OK083
T4F	04/11→	132	180	ATE	17"	[-]	**PF0797**	155,2×74,9×19,8		LG	+EPB	[-]	**PF0264**	106,3×48,6×16,8	OK030/ OK083
T5	11/13→	157	214	ATE	16"	[-]	**PF0263**	155,2×66,6×19,2		LG	+EPB	[-]	**PF0264**	106,3×48,6×16,8	OK030/ OK083
T5	11/13→	157	214	ATE	17"	[-]	**PF0797**	155,2×74,9×19,8		LG	+EPB	[-]	**PF0264**	106,3×48,6×16,8	OK030/ OK083
T5	04/10→	176	240	ATE	16"	[-]	**PF0263**	155,2×66,6×19,2		LG	+EPB	[-]	**PF0264**	106,3×48,6×16,8	OK030/ OK083
T5	04/10→	176	240	ATE	17"	[-]	**PF0797**	155,2×74,9×19,8		LG	+EPB	[-]	**PF0264**	106,3×48,6×16,8	OK030/ OK083
T5	09/13→	180	245	ATE	16"	[-]	**PF0263**	155,2×66,6×19,2		LG	+EPB	[-]	**PF0264**	106,3×48,6×16,8	OK030/ OK083
T5	09/13→	180	245	ATE	17"	[-]	**PF0797**	155,2×74,9×19,8		LG	+EPB	[-]	**PF0264**	106,3×48,6×16,8	OK030/ OK083
T6 AWD	04/10→	224	304	ATE	16"	[-]	**PF0263**	155,2×66,6×19,2		LG	+EPB	[-]	**PF0264**	106,3×48,6×16,8	OK030/ OK083
T6 AWD	04/10→	224	304	ATE	17"	[-]	**PF0797**	155,2×74,9×19,8		LG	+EPB	[-]	**PF0264**	106,3×48,6×16,8	OK030/ OK083
T6	09/13→	225	306	ATE	16"	[-]	**PF0263**	155,2×66,6×19,2		LG	+EPB	[-]	**PF0264**	106,3×48,6×16,8	OK030/ OK083
T6	09/13→	225	306	ATE	17"	[-]	**PF0797**	155,2×74,9×19,8		LG	+EPB	[-]	**PF0264**	106,3×48,6×16,8	OK030/ OK083
S70																
2.0i T5 R	97→00			ATE		[-]	**PF0260**	156,4×74,2×19							
2.0 T.	97→00			ATE	18"	[-]	**PF0421**	156,4×74,2×19							
2.3i T5 XC	97→00			ATE		[-]	**PF0260**	156,4×74,2×19							
2.3 T-5	97→00			ATE	18"	[-]	**PF0421**	156,4×74,2×19							
2.5 TDI	97→00			ATE	18"	[-]	**PF0421**	156,4×74,2×19							
S80 I																
2.0 20V	98→03/06			ATE		[-]	**PF0422**	155,4×69×18,5		ATE		[-]	**PF0543**	122,6×53,8×17	
2.0 20V	98→03/06									ATE		[-]	**PF0543**	122,6×53,8×17	
2.0 20V T.	98→03/06			ATE		[-]	**PF0422**	155,4×69×18,5		ATE		[-]	**PF0543**	122,6×53,8×17	
2.0 20V T.	98→03/06									ATE		[-]	**PF0543**	122,6×53,8×17	
2.4 20V	98→03/06			ATE		[-]	**PF0422**	155,4×69×18,5		ATE		[-]	**PF0543**	122,6×53,8×17	
2.4 20V 16"	98→03/06									ATE		[-]	**PF0543**	122,6×53,8×17	
2.4 Bi-fuel	01→03/06			ATE		[-]	**PF0422**	155,4×69×18,5		ATE		[-]	**PF0543**	122,6×53,8×17	
2.4 Bi-fuel	01→03/06									ATE		[-]	**PF0543**	122,6×53,8×17	
2.4 D	01→03/06			ATE		[-]	**PF0422**	155,4×69×18,5		ATE		[-]	**PF0543**	122,6×53,8×17	
2.4 D	01→03/06									ATE		[-]	**PF0543**	122,6×53,8×17	
2.5 TDI	98→03/06			ATE		[-]	**PF0422**	155,4×69×18,5		ATE		[-]	**PF0543**	122,6×53,8×17	

		KW	CV													
				SiS	i	W.i.	MAGNETI MARELLI	W×H×Th (mm)	Extra kit [Opt]	SiS	i	W.i.	MAGNETI MARELLI	W×H×Th (mm)	Extra kit [Opt]
VOLVO															
S80 I															
2.5 TDI	98 → 03/06									ATE		[-]	**PF0543**	122,6×53,8×17	
2.8 24V T6	98 → 03/06			ATE		[-]	**PF0422**	155,4×69×18,5		ATE		[-]	**PF0543**	122,6×53,8×17	
2.8 24V T6	98 → 03/06									ATE		[-]	**PF0543**	122,6×53,8×17	
2.9i V6 24V	98 → 03/06			ATE		[-]	**PF0422**	155,4×69×18,5		ATE		[-]	**PF0543**	122,6×53,8×17	
2.9i V6 24V	98 → 03/06									ATE		[-]	**PF0543**	122,6×53,8×17	
3.0i	98 → 03/06			ATE		[-]	**PF0422**	155,4×69×18,5		ATE		[-]	**PF0543**	122,6×53,8×17	
3.0i	98 → 03/06									ATE		[-]	**PF0543**	122,6×53,8×17	
3.0i T6	01 → 03/06			ATE		[-]	**PF0422**	155,4×69×18,5		ATE		[-]	**PF0543**	122,6×53,8×17	
3.0i T6	01 → 03/06									ATE		[-]	**PF0543**	122,6×53,8×17	
S80 II (AS)															
1.6	03/06 →			ATE	16"	[-]	**PF0263**	155,2×66,6×19,2		LG	+HB el.	[-]	**PF0264**	106,3×48,6×16,8	OK030/ OK083
1.6	03/06 →			ATE	17"/18"	[-]	**PF0797**	155,2×74,9×19,8		LG	-HB el.	[-]	**PF0257**	95,2×43,2×15,8	OK030/ OK082
2.4 D	03/06 →			ATE	16"	[-]	**PF0263**	155,2×66,6×19,2		LG	+HB el.	[-]	**PF0264**	106,3×48,6×16,8	OK030/ OK083
2.4 D	03/06 →			ATE	17"/18"	[-]	**PF0797**	155,2×74,9×19,8		LG	-HB el.	[-]	**PF0257**	95,2×43,2×15,8	OK030/ OK082
2.4 D5	03/06 →			ATE	16"	[-]	**PF0263**	155,2×66,6×19,2		LG	+HB el.	[-]	**PF0264**	106,3×48,6×16,8	OK030/ OK083
2.4 D5	03/06 →			ATE	17"/18"	[-]	**PF0797**	155,2×74,9×19,8		LG	-HB el.	[-]	**PF0257**	95,2×43,2×15,8	OK030/ OK082
2.4 D5 AWD	03/06 →			ATE	16"	[-]	**PF0263**	155,2×66,6×19,2		LG	+HB el.	[-]	**PF0264**	106,3×48,6×16,8	OK030/ OK083
2.4 D5 AWD	03/06 →			ATE	17"/18"	[-]	**PF0797**	155,2×74,9×19,8		LG	-HB el.	[-]	**PF0257**	95,2×43,2×15,8	OK030/ OK082
2.5 T.	03/06 →			ATE	16"	[-]	**PF0263**	155,2×66,6×19,2		LG	+HB el.	[-]	**PF0264**	106,3×48,6×16,8	OK030/ OK083
2.5 T.	03/06 →			ATE	17"/18"	[-]	**PF0797**	155,2×74,9×19,8		LG	-HB el.	[-]	**PF0257**	95,2×43,2×15,8	OK030/ OK082
3.0 T6 AWD	03/06 →			ATE	16"	[-]	**PF0263**	155,2×66,6×19,2		LG	+HB el.	[-]	**PF0264**	106,3×48,6×16,8	OK030/ OK083
3.0 T6 AWD	03/06 →			ATE	17"/18"	[-]	**PF0797**	155,2×74,9×19,8		LG	-HB el.	[-]	**PF0257**	95,2×43,2×15,8	OK030/ OK082
3.2	03/06 →			ATE	16"	[-]	**PF0263**	155,2×66,6×19,2		LG	+HB el.	[-]	**PF0264**	106,3×48,6×16,8	OK030/ OK083
3.2	03/06 →			ATE	17"/18"	[-]	**PF0797**	155,2×74,9×19,8		LG	-HB el.	[-]	**PF0257**	95,2×43,2×15,8	OK030/ OK082
D4	09/13 →	133	181	ATE	16"	[-]	**PF0263**	155,2×66,6×19,2		LG	+HB el.	[-]	**PF0264**	106,3×48,6×16,8	OK030/ OK083
D4	09/13 →	133	181	ATE	17"/18"	[-]	**PF0797**	155,2×74,9×19,8		LG	-HB el.	[-]	**PF0257**	95,2×43,2×15,8	OK030/ OK082
T4F	05/11 →	132	180	ATE	16"	[-]	**PF0263**	155,2×66,6×19,2		LG	+HB el.	[-]	**PF0264**	106,3×48,6×16,8	OK030/ OK083

		KW	CV	SiS	i	W.i.	MAGNETI MARELLI	W×H×Th (mm)	Extra kit [Opt]	SiS	i	W.i.	MAGNETI MARELLI	W×H×Th (mm)	Extra kit [Opt]
VOLVO															
S80 II (AS)															
T4F	05/11 →	132	180	ATE	17"/18"	[-]	**PF0797**	155,2×74,9×19,8		LG	-HB el.	[-]	**PF0257**	95,2×43,2×15,8	OK030/ OK082
V40 I (VW)															
1.6	12/95 → 08/99	77	105	LG		[+]	**PF0334**	130×72,6×15,5	OK012	LG		[+]	**PF0336**	87×47×16,5	OK030
1.8	07/95 → 08/99	85	115	LG		[+]	**PF0334**	130×72,6×15,5	OK012	LG		[+]	**PF0336**	87×47×16,5	OK030
2.0	07/95 → 08/99	103	140	LG		[+]	**PF0334**	130×72,6×15,5	OK012	LG		[+]	**PF0336**	87×47×16,5	OK030
2.0 T	10/97 → 07/00	118	160	LG		[+]	**PF0334**	130×72,6×15,5	OK012	LG		[+]	**PF0336**	87×47×16,5	OK030
V40 MY98 (VW)															
1.6	03/99 → 06/04	80	109	LG		[+]	**PF0335**	130×78,1×17,3	OK030	LG		[+]	**PF0336**	87×47×16,5	OK030
1.8	03/99 → 06/04	90	122	LG		[+]	**PF0335**	130×78,1×17,3	OK030	LG		[+]	**PF0336**	87×47×16,5	OK030
1.8 Bi-Fuel	11/99 → 08/03	88	120	LG		[+]	**PF0335**	130×78,1×17,3	OK030	LG		[+]	**PF0336**	87×47×16,5	OK030
1.8 Blu-Fuel	06/01 → 08/03	85	116	LG		[+]	**PF0335**	130×78,1×17,3	OK030	LG		[+]	**PF0336**	87×47×16,5	OK030
1.8 i	03/98 → 06/04	92	125	LG		[+]	**PF0335**	130×78,1×17,3	OK030	LG		[+]	**PF0336**	87×47×16,5	OK030
1.8 i	06/01 → 06/04	90	122	LG		[+]	**PF0335**	130×78,1×17,3	OK030	LG		[+]	**PF0336**	87×47×16,5	OK030
1.9 DI	03/99 → 07/00	70	95	LG		[+]	**PF0335**	130×78,1×17,3	OK030	LG		[+]	**PF0336**	87×47×16,5	OK030
1.9 DI	07/00 → 06/04	75	102	LG		[+]	**PF0335**	130×78,1×17,3	OK030	LG		[+]	**PF0336**	87×47×16,5	OK030
1.9 DI	07/00 → 06/04	85	115	LG		[+]	**PF0335**	130×78,1×17,3	OK030	LG		[+]	**PF0336**	87×47×16,5	OK030
1.9 T4	05/97 → 07/00	147	200	LG		[+]	**PF0335**	130×78,1×17,3	OK030	LG		[+]	**PF0336**	87×47×16,5	OK030
1.9 TD	07/95 → 08/99	66	90	LG		[+]	**PF0335**	130×78,1×17,3	OK030	LG		[+]	**PF0336**	87×47×16,5	OK030
2.0	07/95 → 06/04	100	136	LG		[+]	**PF0335**	130×78,1×17,3	OK030	LG		[+]	**PF0336**	87×47×16,5	OK030
2.0 D	12/02 → 06/04	100	136	LG		[+]	**PF0335**	130×78,1×17,3	OK030	LG		[+]	**PF0336**	87×47×16,5	OK030
2.0 T	07/99 → 06/01	121	165	LG		[+]	**PF0335**	130×78,1×17,3	OK030	LG		[+]	**PF0336**	87×47×16,5	OK030
2.0 T	06/01 → 06/04	120	163	LG		[+]	**PF0335**	130×78,1×17,3	OK030	LG		[+]	**PF0336**	87×47×16,5	OK030
2.0 T4	07/00 → 06/04	147	200	LG		[+]	**PF0335**	130×78,1×17,3	OK030	LG		[+]	**PF0336**	87×47×16,5	OK030
V40 2 volumi															
T3 GTDi	03/12 →	110	150	ATE	15"/16"	[-]	**PF0244**	155,2×62,3×18,2		ATE		[-]	**PF0431**	123,1×52×16,4	
T3 GTDi	03/12 →	110	150	ATE	17"	[-]	**PF0608**	156,5×72,9×18,5		ATE		[-]	**PF0431**	123,1×52×16,4	
T4 GTDi	03/12 →	132	180	ATE	15"/16"	[-]	**PF0244**	155,2×62,3×18,2		ATE		[-]	**PF0431**	123,1×52×16,4	
T4 GTDi	03/12 →	132	180	ATE	17"	[-]	**PF0608**	156,5×72,9×18,5		ATE		[-]	**PF0431**	123,1×52×16,4	
D2	03/12 →	84	114	ATE	15"/16"	[-]	**PF0244**	155,2×62,3×18,2		ATE		[-]	**PF0821**	123,1×52×15,3	
D2	03/12 →	84	114	ATE	17"	[-]	**PF0608**	156,5×72,9×18,5		ATE		[-]	**PF0821**	123,1×52×15,3	
D3	03/12 →	110	150	ATE	15"/16"	[-]	**PF0244**	155,2×62,3×18,2		ATE		[-]	**PF0431**	123,1×52×16,4	
D3	03/12 →	110	150	ATE	17"	[-]	**PF0608**	156,5×72,9×18,5		ATE		[-]	**PF0431**	123,1×52×16,4	
D4	03/12 →	130	177	ATE	15"/16"	[-]	**PF0244**	155,2×62,3×18,2		ATE		[-]	**PF0431**	123,1×52×16,4	
D4	03/12 →	130	177	ATE	17"	[-]	**PF0608**	156,5×72,9×18,5		ATE		[-]	**PF0431**	123,1×52×16,4	
V50 (MW)															
1.6 D	01/05 →			ATE	15"/16"	[-]	**PF0244**	155,2×62,3×18,2		ATE	U.S.A./ Canada/ Giappone	[-]	**PF0820**	123,1×52×16,4	
1.6 D	01/05 →			ATE	15"/16"	[-]	**PF0244**	155,2×62,3×18,2		ATE		[-]	**PF0431**	123,1×52×16,4	
1.6 D	01/05 →			ATE	17"	[-]	**PF0608**	156,5×72,9×18,5		ATE		[-]	**PF0431**	123,1×52×16,4	
1.8	04 →			ATE	15"/16"	[-]	**PF0244**	155,2×62,3×18,2		ATE	U.S.A./ Canada/ Giappone	[-]	**PF0820**	123,1×52×16,4	

		KW	CV												
				SiS	i	W.i.	MAGNETI MARELLI	W×H×Th (mm)	Extra kit [Opt]	SiS	i	W.i.	MAGNETI MARELLI	W×H×Th (mm)	Extra kit [Opt]
VOLVO															
V50 (MW)															
1.8	05→			ATE	15"/16"	[-]	**PF0244**	155,2×62,3×18,2		ATE		[-]	**PF0431**	123,1×52×16,4	
1.8	05→			ATE	17"	[-]	**PF0608**	156,5×72,9×18,5		ATE		[-]	**PF0431**	123,1×52×16,4	
2.0 D	04→			ATE	15"/16"	[-]	**PF0244**	155,2×62,3×18,2		ATE	U.S.A./ Canada/ Giappone	[-]	**PF0820**	123,1×52×16,4	
2.0 D	05→			ATE	15"/16"	[-]	**PF0244**	155,2×62,3×18,2		ATE		[-]	**PF0431**	123,1×52×16,4	
2.0 D	05→			ATE	17"	[-]	**PF0608**	156,5×72,9×18,5		ATE		[-]	**PF0431**	123,1×52×16,4	
2.4	04→			ATE	15"/16"	[-]	**PF0244**	155,2×62,3×18,2		ATE	U.S.A./ Canada/ Giappone	[-]	**PF0820**	123,1×52×16,4	
2.4	05→			ATE	15"/16"	[-]	**PF0244**	155,2×62,3×18,2		ATE		[-]	**PF0431**	123,1×52×16,4	
2.4	05→			ATE	17"	[-]	**PF0608**	156,5×72,9×18,5		ATE		[-]	**PF0431**	123,1×52×16,4	
2.5	04→			ATE	15"/16"	[-]	**PF0244**	155,2×62,3×18,2		ATE	U.S.A./ Canada/ Giappone	[-]	**PF0820**	123,1×52×16,4	
2.5	05→			ATE	15"/16"	[-]	**PF0244**	155,2×62,3×18,2		ATE		[-]	**PF0431**	123,1×52×16,4	
2.5	05→			ATE	17"	[-]	**PF0608**	156,5×72,9×18,5		ATE		[-]	**PF0431**	123,1×52×16,4	
V50 (MW) Polizia															
1.6 D	01/05→			ATE	15"/16"	[-]	**PF0244**	155,2×62,3×18,2		ATE		[-]	**PF0431**	123,1×52×16,4	
1.6 D	01/05→			ATE	17"	[-]	**PF0611**	156,5×72,9×18,5		ATE		[-]	**PF0431**	123,1×52×16,4	
1.8	01/05→			ATE	15"/16"	[-]	**PF0244**	155,2×62,3×18,2		ATE		[-]	**PF0431**	123,1×52×16,4	
1.8	01/05→			ATE	17"	[-]	**PF0611**	156,5×72,9×18,5		ATE		[-]	**PF0431**	123,1×52×16,4	
2.0 D	01/05→			ATE	15"/16"	[-]	**PF0244**	155,2×62,3×18,2		ATE		[-]	**PF0431**	123,1×52×16,4	
2.0 D	01/05→			ATE	17"	[-]	**PF0611**	156,5×72,9×18,5		ATE		[-]	**PF0431**	123,1×52×16,4	
2.4	01/05→			ATE	15"/16"	[-]	**PF0244**	155,2×62,3×18,2		ATE		[-]	**PF0431**	123,1×52×16,4	
2.4	01/05→			ATE	17"	[-]	**PF0611**	156,5×72,9×18,5		ATE		[-]	**PF0431**	123,1×52×16,4	
2.5	01/05→			ATE	15"/16"	[-]	**PF0244**	155,2×62,3×18,2		ATE		[-]	**PF0431**	123,1×52×16,4	
2.5	01/05→			ATE	17"	[-]	**PF0611**	156,5×72,9×18,5		ATE		[-]	**PF0431**	123,1×52×16,4	
V60															
1.6 DRIVe	06/11→	84	114	ATE	Ø Disc 300	[-]	**PF0263**	155,2×66,6×19,2		LG		[-]	**PF0264**	106,3×48,6×16,8	OK030/ OK083
1.6 DRIVe	06/11→	84	114	ATE	17"	[-]	**PF0797**	155,2×74,9×19,8		LG		[-]	**PF0264**	106,3×48,6×16,8	OK030/ OK083
2.0 T	09/10→	149	203	ATE	Ø Disc 300	[-]	**PF0263**	155,2×66,6×19,2		LG		[-]	**PF0264**	106,3×48,6×16,8	OK030/ OK083
2.0 T	09/10→	149	203	ATE	17"	[-]	**PF0797**	155,2×74,9×19,8		LG		[-]	**PF0264**	106,3×48,6×16,8	OK030/ OK083
2.4 D5	06/11→	158	215	ATE	Ø Disc 300	[-]	**PF0263**	155,2×66,6×19,2		LG		[-]	**PF0264**	106,3×48,6×16,8	OK030/ OK083
2.4 D5	06/11→	158	215	ATE	17"	[-]	**PF0797**	155,2×74,9×19,8		LG		[-]	**PF0264**	106,3×48,6×16,8	OK030/ OK083
2.4 D5 AWD	06/11→	158	215	ATE	Ø Disc 300	[-]	**PF0263**	155,2×66,6×19,2		LG		[-]	**PF0264**	106,3×48,6×16,8	OK030/ OK083

		KW	CV												
				SiS	i	W.i.	MAGNETI MARELLI	W×H×Th (mm)	Extra kit [Opt]	SiS	i	W.i.	MAGNETI MARELLI	W×H×Th (mm)	Extra kit [Opt]
VOLVO															
V60															
2.4 D5 AWD	06/11→	158	215	ATE	17"	[-]	**PF0797**	155,2×74,9×19,8		LG		[-]	**PF0264**	106,3×48,6×16,8	OK030/ OK083
D3	09/10→	120	163	ATE	Ø Disc 300	[-]	**PF0263**	155,2×66,6×19,2		LG		[-]	**PF0264**	106,3×48,6×16,8	OK030/ OK083
D3	09/10→	120	163	ATE	17"	[-]	**PF0797**	155,2×74,9×19,8		LG		[-]	**PF0264**	106,3×48,6×16,8	OK030/ OK083
D4	10/13→	133	181	ATE	Ø Disc 300	[-]	**PF0263**	155,2×66,6×19,2		LG		[-]	**PF0264**	106,3×48,6×16,8	OK030/ OK083
D4	10/13→	133	181	ATE	17"	[-]	**PF0797**	155,2×74,9×19,8		LG		[-]	**PF0264**	106,3×48,6×16,8	OK030/ OK083
D4 4x4	10/13→	133	181	ATE	Ø Disc 300	[-]	**PF0263**	155,2×66,6×19,2		LG		[-]	**PF0264**	106,3×48,6×16,8	OK030/ OK083
D4 4x4	10/13→	133	181	ATE	17"	[-]	**PF0797**	155,2×74,9×19,8		LG		[-]	**PF0264**	106,3×48,6×16,8	OK030/ OK083
D5	09/10→	151	205	ATE	Ø Disc 300	[-]	**PF0263**	155,2×66,6×19,2		LG		[-]	**PF0264**	106,3×48,6×16,8	OK030/ OK083
D5	09/10→	151	205	ATE	17"	[-]	**PF0797**	155,2×74,9×19,8		LG		[-]	**PF0264**	106,3×48,6×16,8	OK030/ OK083
D5 AWD	09/10→	151	205	ATE	Ø Disc 300	[-]	**PF0263**	155,2×66,6×19,2		LG		[-]	**PF0264**	106,3×48,6×16,8	OK030/ OK083
D5 AWD	09/10→	151	205	ATE	17"	[-]	**PF0797**	155,2×74,9×19,8		LG		[-]	**PF0264**	106,3×48,6×16,8	OK030/ OK083
T3	09/10→	110	150	ATE	Ø Disc 300	[-]	**PF0263**	155,2×66,6×19,2		LG		[-]	**PF0264**	106,3×48,6×16,8	OK030/ OK083
T3	09/10→	110	150	ATE	17"	[-]	**PF0797**	155,2×74,9×19,8		LG		[-]	**PF0264**	106,3×48,6×16,8	OK030/ OK083
T4	09/10→	132	180	ATE	Ø Disc 300	[-]	**PF0263**	155,2×66,6×19,2		LG		[-]	**PF0264**	106,3×48,6×16,8	OK030/ OK083
T4	09/10→	132	180	ATE	17"	[-]	**PF0797**	155,2×74,9×19,8		LG		[-]	**PF0264**	106,3×48,6×16,8	OK030/ OK083
T4F	04/11→	132	180	ATE	Ø Disc 300	[-]	**PF0263**	155,2×66,6×19,2		LG		[-]	**PF0264**	106,3×48,6×16,8	OK030/ OK083
T4F	04/11→	132	180	ATE	17"	[-]	**PF0797**	155,2×74,9×19,8		LG		[-]	**PF0264**	106,3×48,6×16,8	OK030/ OK083
T5	09/10→	177	241	ATE	Ø Disc 300	[-]	**PF0263**	155,2×66,6×19,2		LG		[-]	**PF0264**	106,3×48,6×16,8	OK030/ OK083
T5	09/10→	177	241	ATE	17"	[-]	**PF0797**	155,2×74,9×19,8		LG		[-]	**PF0264**	106,3×48,6×16,8	OK030/ OK083
T5	10/13→	180	245	ATE	Ø Disc 300	[-]	**PF0263**	155,2×66,6×19,2		LG		[-]	**PF0264**	106,3×48,6×16,8	OK030/ OK083
T5	10/13→	180	245	ATE	17"	[-]	**PF0797**	155,2×74,9×19,8		LG		[-]	**PF0264**	106,3×48,6×16,8	OK030/ OK083
T6 AWD	09/10→	224	305	ATE	Ø Disc 300	[-]	**PF0263**	155,2×66,6×19,2		LG		[-]	**PF0264**	106,3×48,6×16,8	OK030/ OK083

		KW	CV	SiS	i	W.i.	MAGNETI MARELLI	W×H×Th (mm)	Extra kit [Opt]	SiS	i	W.i.	MAGNETI MARELLI	W×H×Th (mm)	Extra kit [Opt]
VOLVO															
V60															
T6 AWD	09/10 →	224	305	ATE	17"	[-]	**PF0797**	155,2×74,9×19,8		LG		[-]	**PF0264**	106,3×48,6×16,8	OK030/ OK083
T6	10/13 →	225	306	ATE	Ø Disc 300	[-]	**PF0263**	155,2×66,6×19,2		LG		[-]	**PF0264**	106,3×48,6×16,8	OK030/ OK083
T6	10/13 →	225	306	ATE	17"	[-]	**PF0797**	155,2×74,9×19,8		LG		[-]	**PF0264**	106,3×48,6×16,8	OK030/ OK083
V70 I															
2.0i	00 →			ATE		[-]	**PF0422**	155,4×69×18,5		ATE		[-]	**PF0543**	122,6×53,8×17	
2.0i T5 R	97 → 00			ATE		[-]	**PF0260**	156,4×74,2×19							
2.0 T.	97 → 00			ATE	18"	[-]	**PF0421**	156,4×74,2×19							
2.0 T. AWD	97 → 00			ATE	18"	[-]	**PF0421**	156,4×74,2×19							
2.3i T5 XC	97 → 00			ATE		[-]	**PF0260**	156,4×74,2×19							
2.3 T-5	97 → 00			ATE	18"	[-]	**PF0421**	156,4×74,2×19							
2.3 T-5 4WD	97 → 00			ATE	18"	[-]	**PF0421**	156,4×74,2×19							
2.4 TD	00 →			ATE		[-]	**PF0422**	155,4×69×18,5		ATE		[-]	**PF0543**	122,6×53,8×17	
2.5 TDI	97 → 00			ATE	18"	[-]	**PF0421**	156,4×74,2×19							
V70 II (P80)															
2.0 T	07/01 →	132	180	ATE		[-]	**PF0422**	155,4×69×18,5		ATE		[-]	**PF0543**	122,6×53,8×17	
2.3	10/00 → 09/04	195	265	ATE		[-]	**PF0422**	155,4×69×18,5		ATE		[-]	**PF0543**	122,6×53,8×17	
2.3 AWD	10/00 → 09/04	195	265	ATE		[-]	**PF0422**	155,4×69×18,5		ATE		[-]	**PF0543**	122,6×53,8×17	
2.3 T5	03/00 →	184	250	ATE		[-]	**PF0422**	155,4×69×18,5		ATE		[-]	**PF0543**	122,6×53,8×17	
2.4	03/00 →	103	140	ATE		[-]	**PF0422**	155,4×69×18,5		ATE		[-]	**PF0543**	122,6×53,8×17	
2.4	03/00 →	125	170	ATE		[-]	**PF0422**	155,4×69×18,5		ATE		[-]	**PF0543**	122,6×53,8×17	
2.4	03/00 → 09/03	121	165	ATE		[-]	**PF0422**	155,4×69×18,5		ATE		[-]	**PF0543**	122,6×53,8×17	
2.4 AWD	03/00 → 09/03	121	165	ATE		[-]	**PF0422**	155,4×69×18,5		ATE		[-]	**PF0543**	122,6×53,8×17	
2.4 Bifuel	09/01 →	103	140	ATE		[-]	**PF0422**	155,4×69×18,5		ATE		[-]	**PF0543**	122,6×53,8×17	
2.4 D	12/01 →	96	131	ATE		[-]	**PF0422**	155,4×69×18,5		ATE		[-]	**PF0543**	122,6×53,8×17	
2.4 D	05/05 →	93	126	ATE		[-]	**PF0422**	155,4×69×18,5		ATE		[-]	**PF0543**	122,6×53,8×17	
2.4 D5	08/01 →	120	163	ATE		[-]	**PF0422**	155,4×69×18,5		ATE		[-]	**PF0543**	122,6×53,8×17	
2.4 D5	12/05 →	136	185	ATE		[-]	**PF0422**	155,4×69×18,5		ATE		[-]	**PF0543**	122,6×53,8×17	
2.4 D5 AWD	03/03 →	120	163	ATE		[-]	**PF0422**	155,4×69×18,5		ATE		[-]	**PF0543**	122,6×53,8×17	
2.4 D5 AWD	12/05 →	136	185	ATE		[-]	**PF0422**	155,4×69×18,5		ATE		[-]	**PF0543**	122,6×53,8×17	
2.4 T	03/00 →	147	200	ATE		[-]	**PF0422**	155,4×69×18,5		ATE		[-]	**PF0543**	122,6×53,8×17	
2.4 T AWD	09/01 →	147	200	ATE		[-]	**PF0422**	155,4×69×18,5		ATE		[-]	**PF0543**	122,6×53,8×17	
2.4 T5	04/04 →	191	260	ATE		[-]	**PF0422**	155,4×69×18,5		ATE		[-]	**PF0543**	122,6×53,8×17	
2.5 R Sport	12/02 →	221	300	ATE		[-]	**PF0422**	155,4×69×18,5		ATE		[-]	**PF0543**	122,6×53,8×17	
2.5 T	04/04 →	154	209	ATE		[-]	**PF0422**	155,4×69×18,5		ATE		[-]	**PF0543**	122,6×53,8×17	
2.5 T	08/07 →	147	200	ATE		[-]	**PF0422**	155,4×69×18,5		ATE		[-]	**PF0543**	122,6×53,8×17	
2.5 T AWD	09/02 →	154	209	ATE		[-]	**PF0422**	155,4×69×18,5		ATE		[-]	**PF0543**	122,6×53,8×17	
2.5 TDI	03/00 →	103	140	ATE		[-]	**PF0422**	155,4×69×18,5		ATE		[-]	**PF0543**	122,6×53,8×17	
3.0 T AWD	08/07 →	210	286	ATE		[-]	**PF0422**	155,4×69×18,5		ATE		[-]	**PF0543**	122,6×53,8×17	
3.2	08/07 →	175	238	ATE		[-]	**PF0422**	155,4×69×18,5		ATE		[-]	**PF0543**	122,6×53,8×17	
R 2,5 T AWD	03/03 →	221	300	BR		[-]	**PF0499**	131,8×77,3×15,8		ATE		[-]	**PF0543**	122,6×53,8×17	

		KW	CV	SiS	i	W.i.	MAGNETI MARELLI	W×H×Th (mm)	Extra kit [Opt]	SiS	i	W.i.	MAGNETI MARELLI	W×H×Th (mm)	Extra kit [Opt]
VOLVO															
V70 III															
1.6	07→			ATE		[-]	**PF0263**	155,2×66,6×19,2		LG	+EPB	[-]	**PF0264**	106,3×48,6×16,8	OK030/ OK083
1.6	07→			ATE	17"	[-]	**PF0797**	155,2×74,9×19,8		LG	-HB el.	[-]	**PF0257**	95,2×43,2×15,8	OK030/ OK082
1.6 T4F	11→	132	180	ATE		[-]	**PF0263**	155,2×66,6×19,2		LG	+EPB	[-]	**PF0264**	106,3×48,6×16,8	OK030/ OK083
1.6 T4F	11→	132	180	ATE	17"	[-]	**PF0797**	155,2×74,9×19,8		LG	-HB el.	[-]	**PF0257**	95,2×43,2×15,8	OK030
2.0	07→			ATE		[-]	**PF0263**	155,2×66,6×19,2		LG	-HB el.	[-]	**PF0257**	95,2×43,2×15,8	OK030/ OK082
2.0	07→			ATE	17"	[-]	**PF0797**	155,2×74,9×19,8		LG	+EPB	[-]	**PF0264**	106,3×48,6×16,8	OK030/ OK083
2.0 D	07→			ATE	17"	[-]	**PF0797**	155,2×74,9×19,8		LG	+EPB	[-]	**PF0264**	106,3×48,6×16,8	OK030/ OK083
2.0 D	07→			ATE		[-]	**PF0263**	155,2×66,6×19,2		LG	-HB el.	[-]	**PF0257**	95,2×43,2×15,8	OK030/ OK082
2.4 D	07→			ATE	17"	[-]	**PF0797**	155,2×74,9×19,8		LG	+EPB	[-]	**PF0264**	106,3×48,6×16,8	OK030/ OK083
2.4 D	07→			ATE		[-]	**PF0263**	155,2×66,6×19,2		LG	-HB el.	[-]	**PF0257**	95,2×43,2×15,8	OK030/ OK082
2.4 D5	07→			ATE	17"	[-]	**PF0797**	155,2×74,9×19,8		LG	+EPB	[-]	**PF0264**	106,3×48,6×16,8	OK030/ OK083
2.4 D5	07→			ATE		[-]	**PF0263**	155,2×66,6×19,2		LG	-HB el.	[-]	**PF0257**	95,2×43,2×15,8	OK030/ OK082
2.4 D5 AWD	07→			ATE	17"	[-]	**PF0797**	155,2×74,9×19,8		LG	+EPB	[-]	**PF0264**	106,3×48,6×16,8	OK030/ OK083
2.4 D5 AWD	07→			ATE		[-]	**PF0263**	155,2×66,6×19,2		LG	-HB el.	[-]	**PF0257**	95,2×43,2×15,8	OK030/ OK082
2.5 T.	07→			ATE	17"	[-]	**PF0797**	155,2×74,9×19,8		LG	+EPB	[-]	**PF0264**	106,3×48,6×16,8	OK030/ OK083
2.5 T.	07→			ATE		[-]	**PF0263**	155,2×66,6×19,2		LG	-HB el.	[-]	**PF0257**	95,2×43,2×15,8	OK030/ OK082
3.0 T6	07→			ATE	17"	[-]	**PF0797**	155,2×74,9×19,8		LG	+EPB	[-]	**PF0264**	106,3×48,6×16,8	OK030/ OK083
3.0 T6	07→			ATE		[-]	**PF0263**	155,2×66,6×19,2		LG	-HB el.	[-]	**PF0257**	95,2×43,2×15,8	OK030/ OK082
3.2	07→			ATE	17"	[-]	**PF0797**	155,2×74,9×19,8		LG	+EPB	[-]	**PF0264**	106,3×48,6×16,8	OK030/ OK083
3.2	07→			ATE		[-]	**PF0263**	155,2×66,6×19,2		LG	-HB el.	[-]	**PF0257**	95,2×43,2×15,8	OK030/ OK082
3.2	11→	179	243	ATE	17"	[-]	**PF0797**	155,2×74,9×19,8		LG	+EPB	[-]	**PF0264**	106,3×48,6×16,8	OK030/ OK083
3.2	11→	179	243	ATE		[-]	**PF0263**	155,2×66,6×19,2		LG	-HB el.	[-]	**PF0257**	95,2×43,2×15,8	OK030/ OK082

		KW	CV	SiS	i	W.i.	MAGNETI MARELLI	W×H×Th (mm)	Extra kit [Opt]	SiS	i	W.i.	MAGNETI MARELLI	W×H×Th (mm)	Extra kit [Opt]
VOLVO															
V70 III															
3.2 AWD	11→	179	243	ATE	17"	[-]	**PF0797**	155,2×74,9×19,8		LG	+EPB	[-]	**PF0264**	106,3×48,6×16,8	OK030/ OK083
3.2 AWD	11→	179	243	ATE		[-]	**PF0263**	155,2×66,6×19,2		LG	-HB el.	[-]	**PF0257**	95,2×43,2×15,8	OK030/ OK082
D4	10/13→	133	181	ATE	17"	[-]	**PF0797**	155,2×74,9×19,8		LG	+EPB	[-]	**PF0264**	106,3×48,6×16,8	OK030/ OK083
D4	10/13→	133	181	ATE		[-]	**PF0263**	155,2×66,6×19,2		LG	-HB el.	[-]	**PF0257**	95,2×43,2×15,8	OK030/ OK082
D4 4x4	10/13→	133	181	ATE	17"	[-]	**PF0797**	155,2×74,9×19,8		LG	+EPB	[-]	**PF0264**	106,3×48,6×16,8	OK030/ OK083
D4 4x4	10/13→	133	181	ATE		[-]	**PF0263**	155,2×66,6×19,2		LG	-HB el.	[-]	**PF0257**	95,2×43,2×15,8	OK030/ OK082
T5	10/13→	180	245	ATE	17"	[-]	**PF0797**	155,2×74,9×19,8		LG	+EPB	[-]	**PF0264**	106,3×48,6×16,8	OK030/ OK083
T5	10/13→	180	245	ATE		[-]	**PF0263**	155,2×66,6×19,2		LG	-HB el.	[-]	**PF0257**	95,2×43,2×15,8	OK030/ OK082
T6	11→	224	305	ATE	17"	[-]	**PF0797**	155,2×74,9×19,8		LG	+EPB	[-]	**PF0264**	106,3×48,6×16,8	OK030/ OK083
T6	11→	224	305	ATE		[-]	**PF0263**	155,2×66,6×19,2		LG	-HB el.	[-]	**PF0257**	95,2×43,2×15,8	OK030/ OK082
XC60															
2.0 T	03/10→	149	203							LG	+EPB	[-]	**PF0264**	106,3×48,6×16,8	OK030/ OK083
2.4 D	07/09→	129	175							LG	+EPB	[-]	**PF0264**	106,3×48,6×16,8	OK030/ OK083
2.4 D AWD	05/08→	120	163							LG	+EPB	[-]	**PF0264**	106,3×48,6×16,8	OK030/ OK083
3.2 AWD	07/09→	175	238							LG	+EPB	[-]	**PF0264**	106,3×48,6×16,8	OK030/ OK083
3.2 AWD	03/10→	179	243							LG	+EPB	[-]	**PF0264**	106,3×48,6×16,8	OK030/ OK083
D3	03/10→	120	163							LG	+EPB	[-]	**PF0264**	106,3×48,6×16,8	OK030/ OK083
D5	11→	158	215							LG	+EPB	[-]	**PF0264**	106,3×48,6×16,8	OK030/ OK083
D4 4x4	10/13→	133	181							LG	+EPB	[-]	**PF0264**	106,3×48,6×16,8	OK030/ OK083
D4	10/13→	133	181							LG	+EPB	[-]	**PF0264**	106,3×48,6×16,8	OK030/ OK083
D5 AWD	06/11→	158	215							LG	+EPB	[-]	**PF0264**	106,3×48,6×16,8	OK030/ OK083
D5 AWD	05/08→	136	185							LG	+EPB	[-]	**PF0264**	106,3×48,6×16,8	OK030/ OK083

		KW	CV													
				SiS	i	W.i.	MAGNETI MARELLI	W×H×Th (mm)	Extra kit [Opt]	SiS	i	W.i.	MAGNETI MARELLI	W×H×Th (mm)	Extra kit [Opt]
VOLVO															
XC60															
D5 AWD	07/09 →	151	205							LG	+EPB	[-]	**PF0264**	106,3×48,6×16,8	OK030/ OK083
T5	09/10 →	177	241							LG	+EPB	[-]	**PF0264**	106,3×48,6×16,8	OK030/ OK083
T5	10/13 →	180	245							LG	+EPB	[-]	**PF0264**	106,3×48,6×16,8	OK030/ OK083
T6	10/13 →	225	306							LG	+EPB	[-]	**PF0264**	106,3×48,6×16,8	OK030/ OK083
XC70 I Cross Country															
2.4 AWD	03/00 → 09/03	121	165	ATE		[-]	**PF0422**	155,4×69×18,5		ATE		[-]	**PF0543**	122,6×53,8×17	
2.4 D5 AWD	12/05 →	136	185	ATE		[-]	**PF0422**	155,4×69×18,5		ATE		[-]	**PF0543**	122,6×53,8×17	
2.4 D5 XC AWD	09/02 →	120	163	ATE		[-]	**PF0422**	155,4×69×18,5		ATE		[-]	**PF0543**	122,6×53,8×17	
2.4 T XC AWD	03/00 → 09/02	147	200	ATE		[-]	**PF0422**	155,4×69×18,5		ATE		[-]	**PF0543**	122,6×53,8×17	
2.4 T XC AWD	11/97 → 09/02	142	193	ATE		[-]	**PF0422**	155,4×69×18,5		ATE		[-]	**PF0543**	122,6×53,8×17	
2.5 T XC AWD	09/02 →	154	209	ATE		[-]	**PF0422**	155,4×69×18,5		ATE		[-]	**PF0543**	122,6×53,8×17	
3.2	02/07 →	175	238	ATE		[-]	**PF0422**	155,4×69×18,5		ATE		[-]	**PF0543**	122,6×53,8×17	
XC70 II															
2.4 D	01/10 →	129	175	ATE	16"	[-]	**PF0263**	155,2×66,6×19,2		LG	-HB el.	[-]	**PF0257**	95,2×43,2×15,8	OK030/ OK083
2.4 D	01/10 →	129	175	ATE	16"	[-]	**PF0263**	155,2×66,6×19,2		LG	+HB el.	[-]	**PF0264**	106,3×48,6×16,8	OK030/ OK083
2.4 D AWD	08/07 →	120	163	ATE	16"	[-]	**PF0263**	155,2×66,6×19,2		LG	-HB el.	[-]	**PF0257**	95,2×43,2×15,8	OK030/ OK082
2.4 D AWD	08/07 →	120	163	ATE	16"	[-]	**PF0263**	155,2×66,6×19,2		LG	+HB el.	[-]	**PF0264**	106,3×48,6×16,8	OK030/ OK082
3.2 AWD	08/07 →	179	243	ATE	16"	[-]	**PF0263**	155,2×66,6×19,2		LG	-HB el.	[-]	**PF0257**	95,2×43,2×15,8	OK030/ OK082
3.2 AWD	08/07 →	179	243	ATE	16"	[-]	**PF0263**	155,2×66,6×19,2		LG	+HB el.	[-]	**PF0264**	106,3×48,6×16,8	OK030/ OK082
3.2 AWD	08/07 →	175	238	ATE	16"	[-]	**PF0263**	155,2×66,6×19,2		LG	-HB el.	[-]	**PF0257**	95,2×43,2×15,8	OK030/ OK082
3.2 AWD	08/07 →	175	238	ATE	16"	[-]	**PF0263**	155,2×66,6×19,2		LG	+HB el.	[-]	**PF0264**	106,3×48,6×16,8	OK030/ OK082
D3	08/11 →	120	163	ATE	16"	[-]	**PF0263**	155,2×66,6×19,2		LG	-HB el.	[-]	**PF0257**	95,2×43,2×15,8	OK030/ OK082
D3	08/11 →	120	163	ATE	16"	[-]	**PF0263**	155,2×66,6×19,2		LG	+HB el.	[-]	**PF0264**	106,3×48,6×16,8	OK030/ OK082
D3 AWD	08/11 →	120	163	ATE	16"	[-]	**PF0263**	155,2×66,6×19,2		LG	-HB el.	[-]	**PF0257**	95,2×43,2×15,8	OK030/ OK082
D3 AWD	08/11 →	120	163	ATE	16"	[-]	**PF0263**	155,2×66,6×19,2		LG	+HB el.	[-]	**PF0264**	106,3×48,6×16,8	OK030/ OK082
D4	10/13 →	133	181	ATE	16"	[-]	**PF0263**	155,2×66,6×19,2		LG	-HB el.	[-]	**PF0257**	95,2×43,2×15,8	OK030/ OK082

		KW	CV												
				SiS	i	W.i.	MAGNETI MARELLI	W×H×Th (mm)	Extra kit [Opt]	SiS	i	W.i.	MAGNETI MARELLI	W×H×Th (mm)	Extra kit [Opt]
VOLVO															
XC70 II															
D4	10/13→	133	181	ATE	16"	[-]	**PF0263**	155,2×66,6×19,2		LG	+HB el.	[-]	**PF0264**	106,3×48,6×16,8	OK030/ OK082
D4 4x4	10/13→	133	181	ATE	16"	[-]	**PF0263**	155,2×66,6×19,2		LG	-HB el.	[-]	**PF0257**	95,2×43,2×15,8	OK030/ OK082
D4 4x4	10/13→	133	181	ATE	16"	[-]	**PF0263**	155,2×66,6×19,2		LG	+HB el.	[-]	**PF0264**	106,3×48,6×16,8	OK030/ OK082
D5 AWD	06/11→	158	215	ATE	16"	[-]	**PF0263**	155,2×66,6×19,2		LG	-HB el.	[-]	**PF0257**	95,2×43,2×15,8	OK030/ OK082
D5 AWD	06/11→	158	215	ATE	16"	[-]	**PF0263**	155,2×66,6×19,2		LG	+HB el.	[-]	**PF0264**	106,3×48,6×16,8	OK030/ OK082
D5 AWD	08/07→	136	185	ATE	16"	[-]	**PF0263**	155,2×66,6×19,2		LG	-HB el.	[-]	**PF0257**	95,2×43,2×15,8	OK030/ OK082
D5 AWD	08/07→	136	185	ATE	16"	[-]	**PF0263**	155,2×66,6×19,2		LG	+HB el.	[-]	**PF0264**	106,3×48,6×16,8	OK030/ OK082
D5 AWD	12/09→	151	205	ATE	16"	[-]	**PF0263**	155,2×66,6×19,2		LG	-HB el.	[-]	**PF0257**	95,2×43,2×15,8	OK030/ OK082
D5 AWD	12/09→	151	205	ATE	16"	[-]	**PF0263**	155,2×66,6×19,2		LG	+HB el.	[-]	**PF0264**	106,3×48,6×16,8	OK030/ OK082
T6 AWD	01/10→	224	304	ATE	16"	[-]	**PF0263**	155,2×66,6×19,2		LG	-HB el.	[-]	**PF0257**	95,2×43,2×15,8	OK030/ OK082
T6 AWD	01/10→	224	304	ATE	16"	[-]	**PF0263**	155,2×66,6×19,2		LG	+HB el.	[-]	**PF0264**	106,3×48,6×16,8	OK030/ OK082
T6 AWD	01/08→	210	286	ATE	16"	[-]	**PF0263**	155,2×66,6×19,2		LG	-HB el.	[-]	**PF0257**	95,2×43,2×15,8	OK030/ OK082
T6 AWD	01/08→	210	286	ATE	16"	[-]	**PF0263**	155,2×66,6×19,2		LG	+HB el.	[-]	**PF0264**	106,3×48,6×16,8	OK030/ OK082
XC90															
2.4 D5	10/02→			ATE		[-]	**PF0422**	155,4×69×18,5		ATE		[-]	**PF0543**	122,6×53,8×17	
2.4 D5	10/02→			ATE	17"	[-]	**PF0679**	155,1×75,1×19		ATE		[-]	**PF0681**	123×61,8×18,6	
2.4 D5	10/02→									ATE		[-]	**PF0681**	123×61,8×18,6	
2.5 T.	10/02→			ATE		[-]	**PF0422**	155,4×69×18,5		ATE		[-]	**PF0543**	122,6×53,8×17	
2.5 T.	10/02→			ATE	17"	[-]	**PF0679**	155,1×75,1×19		ATE		[-]	**PF0681**	123×61,8×18,6	
2.5 T.	10/02→									ATE		[-]	**PF0681**	123×61,8×18,6	
2.9 T6	10/02→			ATE		[-]	**PF0422**	155,4×69×18,5		ATE		[-]	**PF0543**	122,6×53,8×17	
2.9 T6	10/02→			ATE	17"	[-]	**PF0679**	155,1×75,1×19		ATE		[-]	**PF0681**	123×61,8×18,6	
2.9 T6	10/02→									ATE		[-]	**PF0681**	123×61,8×18,6	

Applicazione per codice
Buyers guide
Zuordnung nach Bestellnummer
Affectations par références
Aplicación por referencia
Aplicação por código
Εφαρμογές ανά κωδικό
Zastosowanie dla kodu
Применение по коду
Koda göre uygulama

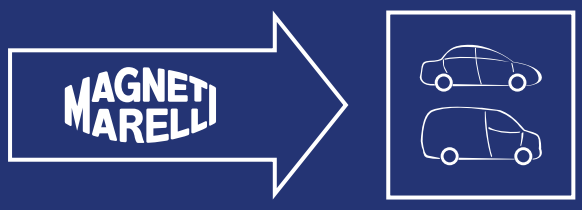

PF0101

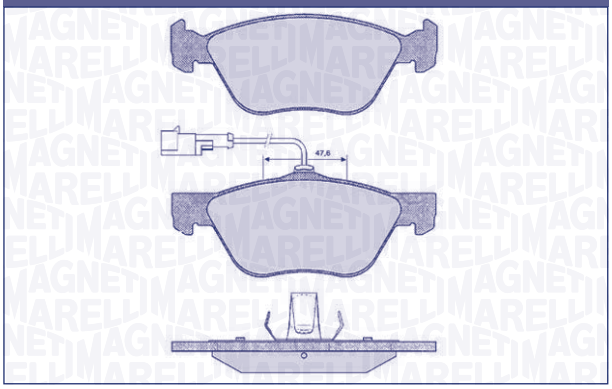

F/R	WVA	W×H×Th (mm)	SiS	Nr. Pz	W.i.	i	Extra kit [Opt]
F	21636 21637	155,1×59,1×19,3 156,4×61,8×19,3	ATE	2x 1x 1x	2x	w.i. L=200mm	

ALFA ROMEO	
145/146	95 →
156/156 II	97 →
GT	11/03 →
GTV/GTV II	96 →
Spider/Spider II	95 →
FIAT	
Bravo HGT	95 →
Coupé (175)	95 →
Marea (185)	96 →
LANCIA	
Dedra	96 →
Lybra	99 →

PF0102

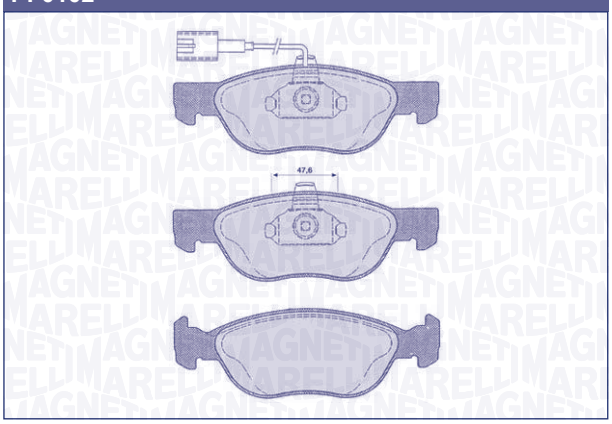

F/R	WVA	W×H×Th (mm)	SiS	Nr. Pz	W.i.	i	Extra kit [Opt]
F	21927 21928 21929	156,4×52,5×17,8	ATE	2x 1x 1x	1x	w.i. L=215mm	

ALFA ROMEO	
145	99 →
146	99 →

PF0102

FIAT	
Barchetta (183)	03 →
Brava	95 →
Bravo	95 →
Marea (185)	99 →

PF0103

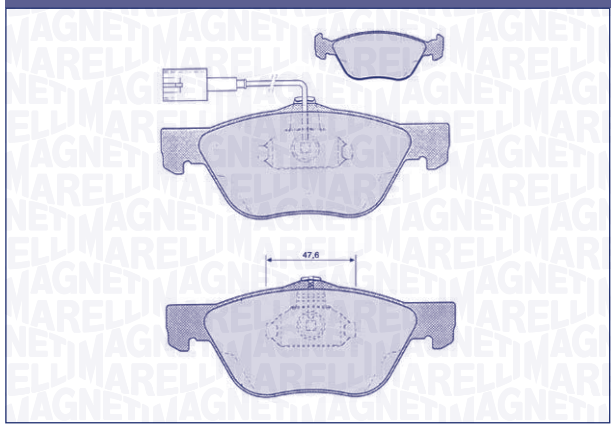

F/R	WVA	W×H×Th (mm)	SiS	Nr. Pz	W.i.	i	Extra kit [Opt]
F	21636 21637	155,1×59,1×19,3 156,4×61,8×19,3	ATE	2x 1x 1x	1x	w.i. L=200mm	

ALFA ROMEO	
145	04/00 →
147 (937)	00 →
156 II	07/03 →
FIAT	
Bravo HGT	04/00 →
Marea (185)	04/00 →
Multipla I/II	98 →
Punto III (188)	07/03 →
LANCIA	
Libra (839)	04/00 →

PF0104

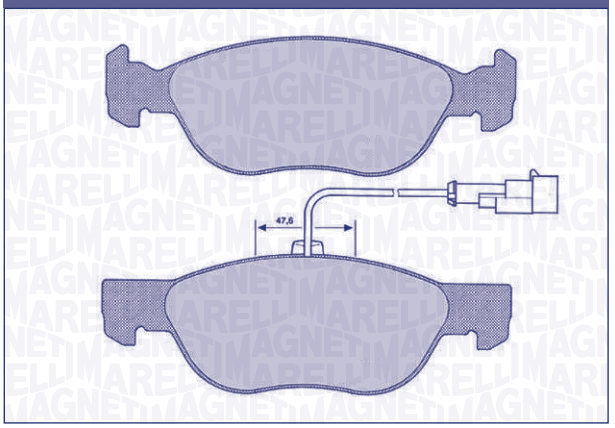

F/R	WVA	W×H×Th (mm)	SiS	Nr. Pz	W.i.	i	Extra kit [Opt]
F	21927 21929	156,4×52,5×17,8	ATE	2x 2x	2x	w.i. L=200mm	

ALFA ROMEO	
145	95 →
146	95 →
GTV	95 →
Spider	95 →
FIAT	
Barchetta (183)	95 →
Brava/Bravo	95 →
Marea (185)	96 →
LANCIA	
Dedra	96 →
Delta	96 →

PF0105

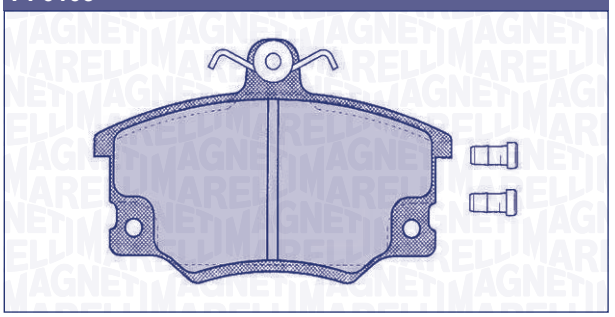

F/R	WVA	W×H×Th (mm)	SiS	Nr. Pz	W.i.	i	Extra kit [Opt]
F	20833 20834 20838	104×66,4×17	LG	4x	2x	w.i. plugs	OK030

ALFA ROMEO	
145/146	94 →
155	92 →
AUTOBIANCHI	
Y 10	85 →

PF0105

FIAT	
Argenta	78 →
Punto GT (176)	93 →
Punto (176)	93 →
Regata (138)	83 →
Ritmo	85 →
Tempra	90 →
Tipo	88 →
Uno TD/Selecta	86 →
INNOCENTI	
Mille	96 →
LANCIA	
Dedra	89 →
Delta DS	86 →
Delta	93 →
Prisma	84 →
Y (840)	96 →

PF0106

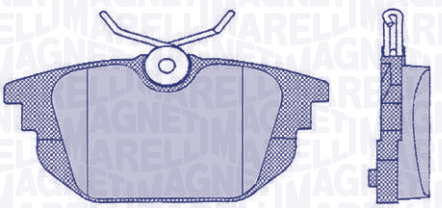

F/R	WVA	W×H×Th (mm)	SiS	Nr. Pz	W.i.	i	Extra kit [Opt]
R	23177	86,8×44,6×14,2	LG	4x	[-]	–	OK032

ALFA ROMEO	
145	94 →
146	94 →
GT	11/03 →
GTV	97 →
GTV II	03 →
Spider	97 →
Spider II	03 →
FIAT	
Barchetta (183)	97 →
Bravo HGT	97 →
Coupé (175)	96 →
Marea (185)	96 →
Punto GT Turbo (176)	97 →
Punto II (188)	99 →
LANCIA	
Delta	97 →

PF0107

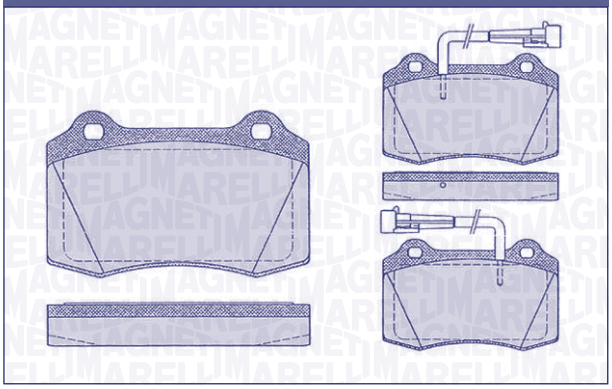

F/R	WVA	W×H×Th (mm)	SiS	Nr. Pz	W.i.	i	Extra kit [Opt]
F	21831 23206 23207	109,7×69,3×17,8	BR	2x 1x 1x	2x	w.i. L=310mm / antirumore in confezione / antinoise in the box	

ALFA ROMEO	
147 GTA (937)	03 →
156 II GTA	03 →
GTV	96 →
GTV II	03 →
Spider	96 →
Spider II	03 →
FERRARI	
360 Modena (F131)	03/99 →

PF0108

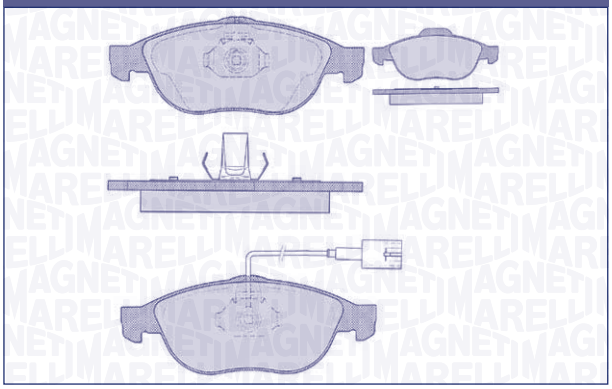

F/R	WVA	W×H×Th (mm)	SiS	Nr. Pz	W.i.	i	Extra kit [Opt]
F	23140 23141	155,1×59,3×19 156,3×63,8×19	ATE	2x 1x 1x	1x	w.i. L=200mm	

ALFA ROMEO	
147 (937)	00 →

PF0109

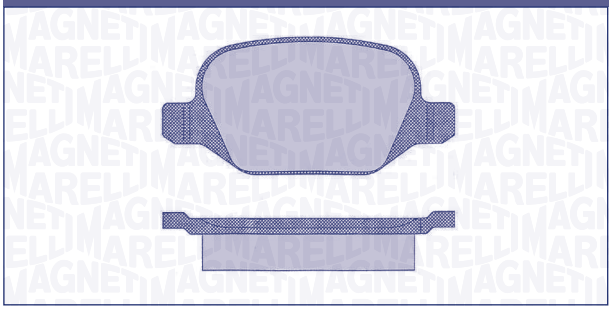

F/R	WVA	W×H×Th (mm)	SiS	Nr. Pz	W.i.	i	Extra kit [Opt]
R	23517	95,8×43,9×16,5	LG	4x	[-]	–	OK039/ OK069

ALFA ROMEO	
147 (937)	00 →
156	05/01 →
156 II	07/03 →
156 Cross Wagon	05 →
FIAT	
Linea (323)	07 →
LANCIA	
Libra (839)	99 →

PF0110

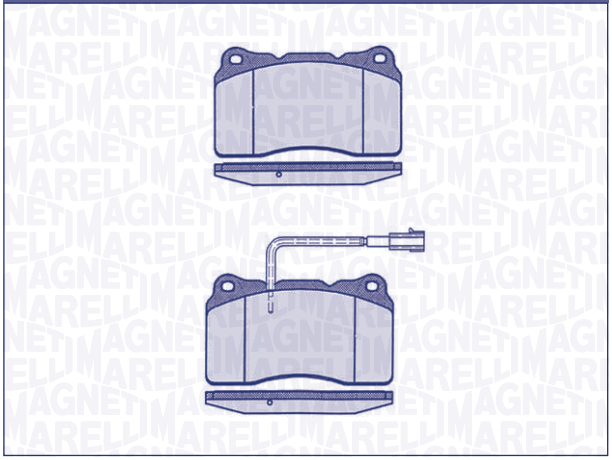

F/R	WVA	W×H×Th (mm)	SiS	Nr. Pz	W.i.	i	Extra kit [Opt]
F	23092 24273	131,8×77,3×15,8	BR	3x 1x	1x	w.i. L=370mm / 4 antirumore in confezione / 4 antinoise in the box	

ALFA ROMEO	
156 Cross Wagon	05 →

PF0111

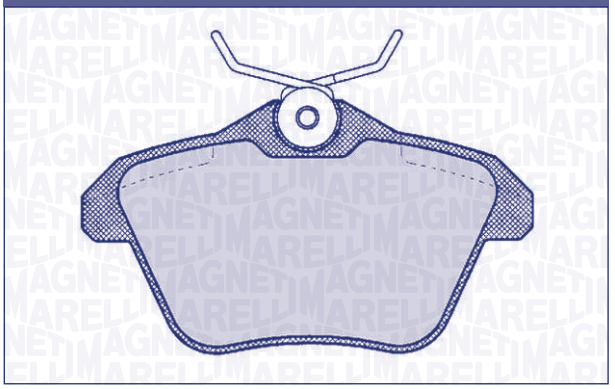

F/R	WVA	W×H×Th (mm)	SiS	Nr. Pz	W.i.	i	Extra kit [Opt]
R	21606	89,9×50×16,5	LG	4x	[-]	–	OK030

ALFA ROMEO	
156/156 II	97 →
164	93 →
166/166 II	98 →
LANCIA	
K (838)	94 →
K Coupé (838)	95 →

PF0112

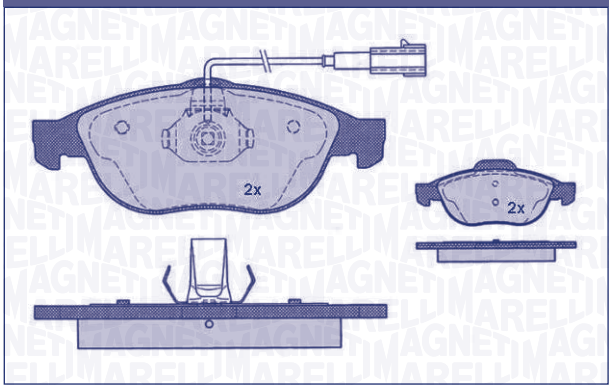

F/R	WVA	W×H×Th (mm)	SiS	Nr. Pz	W.i.	i	Extra kit [Opt]
F	23140 23141	155,1×59,3×19 156,3×63,8×19	ATE	2x 2x	2x	w.i. L=200mm	

ALFA ROMEO	
156	97 →
LANCIA	
Libra (839)	99 →

PF0113

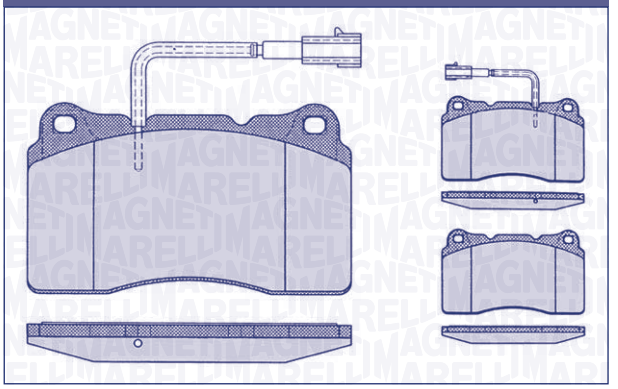

F/R	WVA	W×H×Th (mm)	SiS	Nr. Pz	W.i.	i	Extra kit [Opt]
F	23092 23110 23111	131,8×77,3×15,8	BR	2x 1x 1x	2x	w.i. L=160mm / 4 antirumore in confezione / 4 antinoise in the box	

ALFA ROMEO	
159 (939)	05 →
166	98 →
166 II	03 →
Brera	03/06 →
Spider III	05/09 →
LANCIA	
K (838)	98 →
K Coupè (838)	98 →

PF0114

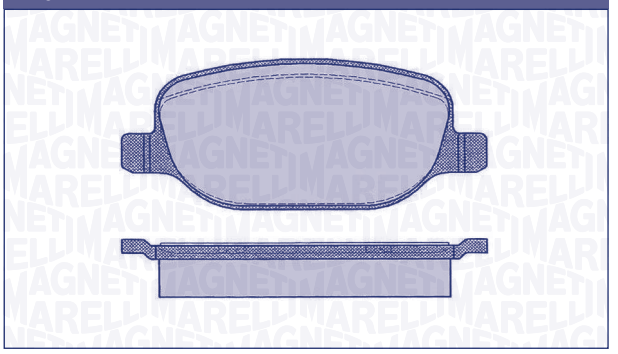

F/R	WVA	W×H×Th (mm)	SiS	Nr. Pz	W.i.	i	Extra kit [Opt]
R	23760	116,7×49,9×17,8	LG	4x	[-]	–	OK039/ OK091/ OK085

ALFA ROMEO	
159 (939)	05 →
Brera	06 →
Spider III	06 →
LANCIA	
Thesis (841)	02 →

PF0115

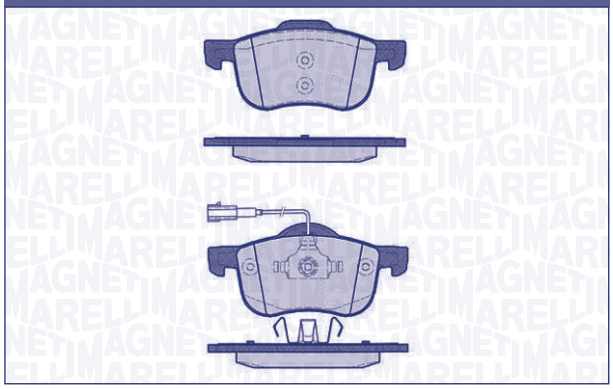

F/R	WVA	W×H×Th (mm)	SiS	Nr. Pz	W.i.	i	Extra kit [Opt]
F	24339 24340	155,2×71,3×20,2 156,5×69×20,2	ATE	2x 2x	2x	w.i. L=200mm	

ALFA ROMEO	
159 (939)	03/06 →
159 SW (939)	03/06 →
Brera	06 →
Spider III	05/09 →

PF0116

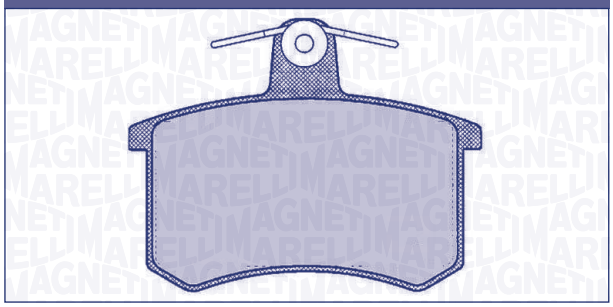

F/R	WVA	W×H×Th (mm)	SiS	Nr. Pz	W.i.	i	Extra kit [Opt]
R	20668	87×66,7×16,5	LG	4x	[-]	–	OK032

ALFA ROMEO	
164	87 →
33	89 →
SZ Coupé	92 →
AUDI	
80	82 →
80 Coupe	84 →
90	84 →
100	84 →
200	82 →
A4/A6/A8	94 →
Cabrio	92 →
Coupé	85 →
S 6 Quattro Biturbo	94 →
S 6 Quattro V8	94 →
S 8 V8	94 →

PF0116

FIAT	
Croma	86 →
LANCIA	
Thema	84 →
Thema Ferrari 8.32	87 →

PF0117

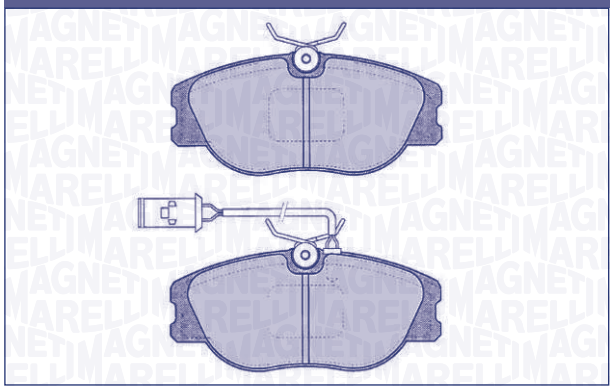

F/R	WVA	W×H×Th (mm)	SiS	Nr. Pz	W.i.	i	Extra kit [Opt]
F	21147 21148	129,9×59×19	LG	2x 2x	2x	w.i. L=450mm	OK030

ALFA ROMEO	
164	87 →
RZ	92 →

PF0118

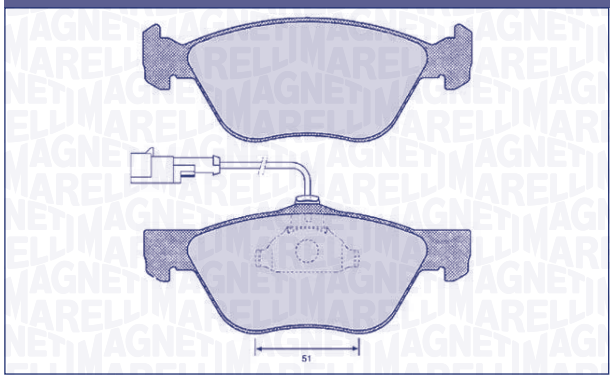

F/R	WVA	W×H×Th (mm)	SiS	Nr. Pz	W.i.	i	Extra kit [Opt]
F	21636 23222 23289	155,1×59,1×19,3 156,4×61,8×19,3	ATE	2x 1x 1x	2x	w.i. L=200mm	

ALFA ROMEO	
147 (937)	11/02 →
166 Twin Spark	98 →
166 II	03 →
LANCIA	
K (838)	95 →
K Coupé	95 →

PF0119

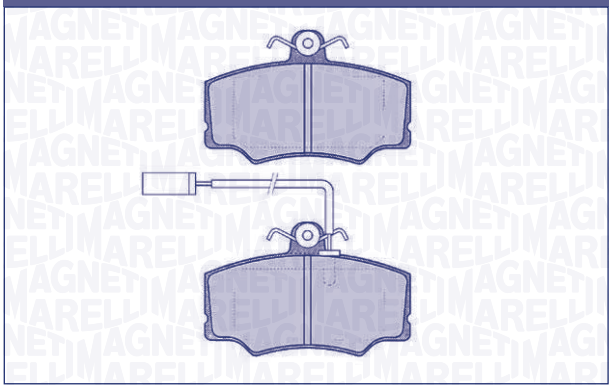

F/R	WVA	W×H×Th (mm)	SiS	Nr. Pz	W.i.	i	Extra kit [Opt]
F	20332 21271	95×62×17	LG	2x 2x	2x	w.i. L=920mm	OK030

ALFA ROMEO	
33	90 →
33 (+ABS)	89 →

PF0121

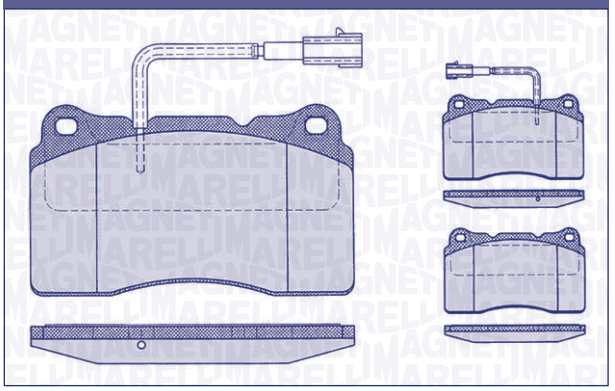

F/R	WVA	W×H×Th (mm)	SiS	Nr. Pz	W.i.	i	Extra kit [Opt]
F	23092 24273 24274	131,8×77,3×15,8	BR	2x 1x 1x	2x	w.i. L=370mm / 4 antirumore in confezione / 4 antinoise in the box	

ALFA ROMEO	
Brera	06 →
GT	03 →
Spider III	04/07 →
Spider III Q4	06 →

PF0122

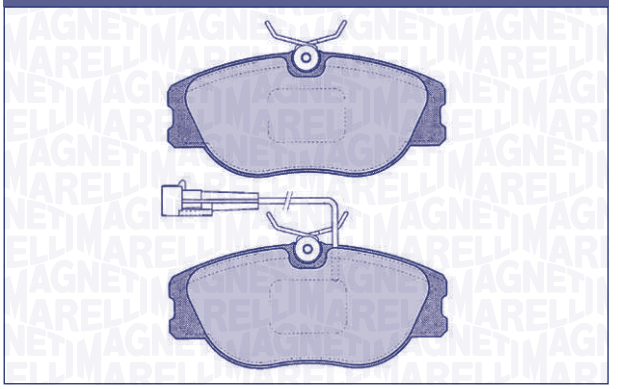

F/R	WVA	W×H×Th (mm)	SiS	Nr. Pz	W.i.	i	Extra kit [Opt]
F	21147 21383	129,9×59×19	LG	2x 2x	2x	w.i. L=300mm	OK030

ALFA ROMEO	
155	92 →
GTV	05/95 →
Spider	05/95 →
FIAT	
Coupé (175)	94 →
Croma V6	93 →
LANCIA	
Dedra	90 →
Delta 16V	90 →
Delta T. HF Integrale	90 →
K (838)	95 →
Thema	91 →

PF0123

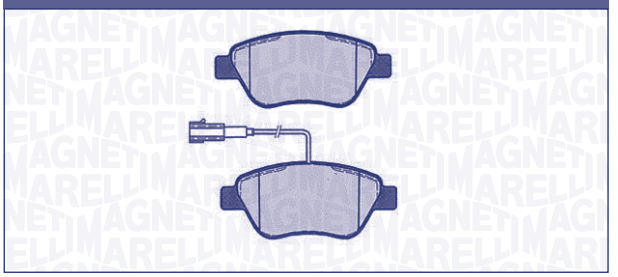

F/R	WVA	W×H×Th (mm)	SiS	Nr. Pz	W.i.	i	Extra kit [Opt]
F	23982	122,9×53,4×18	BSC	3x 1x	1x	w.i. L=210mm	OK012/ OK040

FIAT	
Punto IV (Grande Punto)	05 →

PF0124

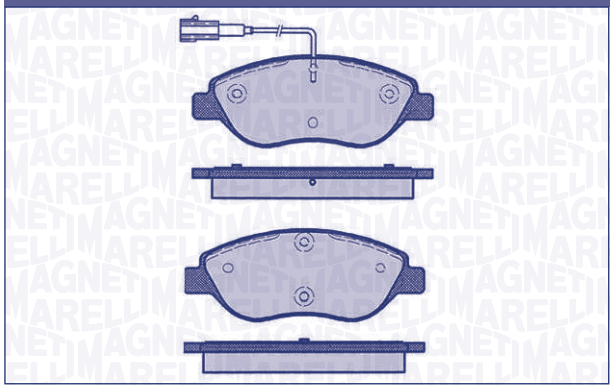

F/R	WVA	W×H×Th (mm)	SiS	Nr. Pz	W.i.	i	Extra kit [Opt]
F	23711 23713	151×57,4×19	BSC	2x 2x	2x	w.i. L=210mm	OK012/ OK038

ALFA ROMEO	
Mito (955)	10 →
FIAT	
Bravo II	10 →
LANCIA	
Delta II	10 →

PF0125

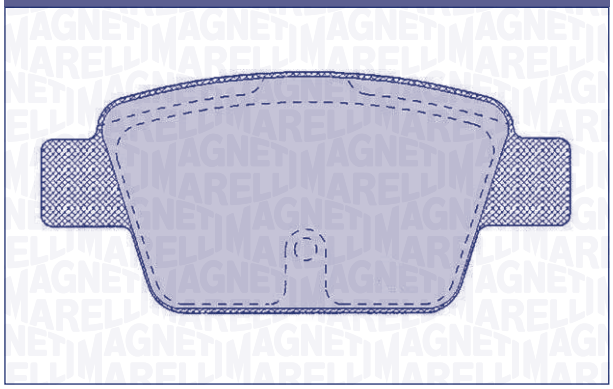

F/R	WVA	W×H×Th (mm)	SiS	Nr. Pz	W.i.	i	Extra kit [Opt]
R	23714	94,9×42,8×16,4	BSC	4x	[-]	–	OK033/ OK040

ALFA ROMEO	
Mito	08/08 →
FIAT	
Bravo II (198)	07 →
Multipla I (186)	04/99 →
Multipla II	07/04 →
Stilo (192)	01 →
LANCIA	
Delta II	07/08 →

PF0126

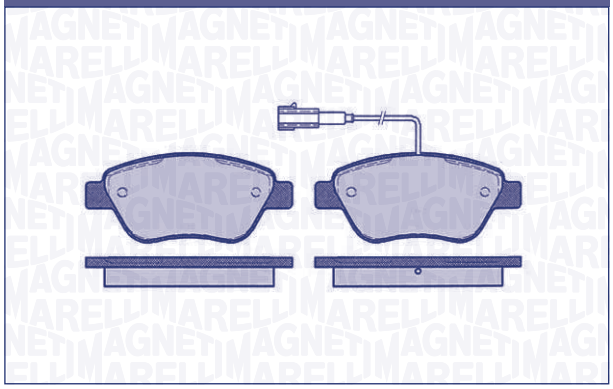

F/R	WVA	W×H×Th (mm)	SiS	Nr. Pz	W.i.	i	Extra kit [Opt]
F	23705 23706 23707	122,9×53,4×18	BSC	3x 1x	1x	w.i. L=210mm	OK012/ OK040

ALFA ROMEO	
Mito (955)	08/08 →
CITROËN	
Nemo	08 →
FIAT	
Bravo II (198)	07 →
Doblò II	11/05 →
Idea (135)	03 →
Linea (323)	07 →
Panda II 4x4 (169)	06/05 →
Panda II 100hp	10/06 →
Stilo (192)	01 →
LANCIA	
Musa	04 →

PF0127

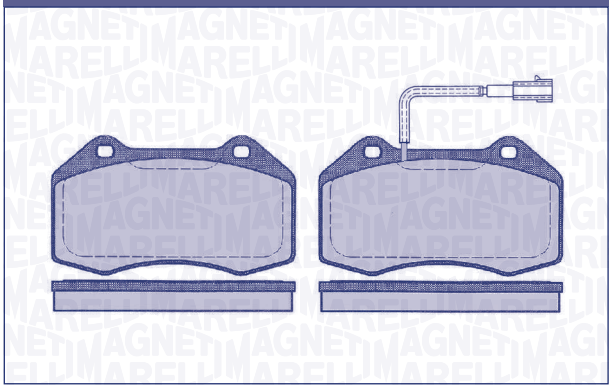

F/R	WVA	W×H×Th (mm)	SiS	Nr. Pz	W.i.	i	Extra kit [Opt]
F	24162 24687	124,7×70,7×15,1	BR	3x 1x	1x	w.i. L=140mm / antirumore in confezione / antinoise in the box	

ABARTH	
Grande punto IV ABARTH (199)	07 →
Grande Punto Evo (199)	10/09 →
ALFA ROMEO	
Mito Turbo 170cv	08/08 →
FIAT	
500 Abarth (169)	08 →
Punto IV Abarth (199)	07 →
Grande Punto Evo (199)	10/09 →

PF0128

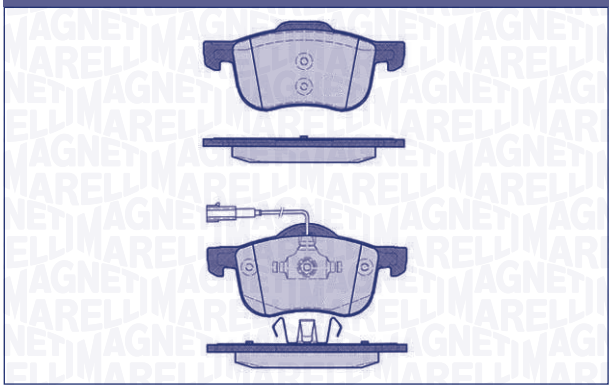

F/R	WVA	W×H×Th (mm)	SiS	Nr. Pz	W.i.	i	Extra kit [Opt]
F	24339 25239	155,2×71,3×20,2 155,2×69×20,2	ATE	2x 2x	2x	w.i. L=200mm	

ALFA ROMEO	
Giulietta (940)	10 →

PF0129

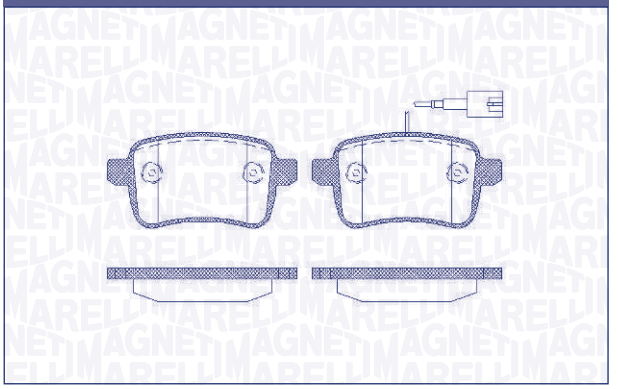

F/R	WVA	W×H×Th (mm)	SiS	Nr. Pz	W.i.	i	Extra kit [Opt]
R	25156 25157	95,8×48,1×17	LG	2x 2x	2x	w.i. L=190mm	OK039

ALFA ROMEO	
Giulietta (940)	10 →

PF0130

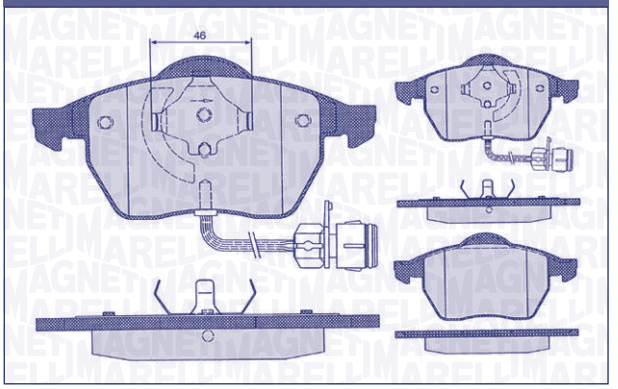

F/R	WVA	W×H×Th (mm)	SiS	Nr. Pz	W.i.	i	Extra kit [Opt]
F	20676 20678	156,4×74,2×19	ATE	2x 1x 1x	2x	w.i. L=200mm	

AUDI	
100	90 →
A 4	95 →
A 6	94 →
A 8 Quattro	95 →
VOLKSWAGEN	
Passat II / Variant	96 →
Vento VR6	92 →

PF0131

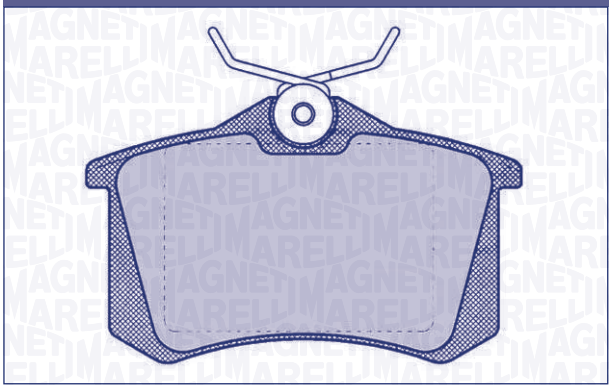

F/R	WVA	W×H×Th (mm)	SiS	Nr. Pz	W.i.	i	Extra kit [Opt]
R	20960 23554	87×53×17	LG	4x	[-]	–	OK039/ OK041

AUDI	
Allroad (4BH)	05/00 →
A 1 (5K)	10 →
A 3	96 →
A 4/A 6	97 →
S 3/S 4	97 →
TT/TT Roadster	99 →
CITROËN	
C2	03 →
C3/C3 XTR/Picasso	02 →
C4/C4 Coupè	05 →
C8	11/02 →
DS3	04/10 →
DS3 Cabriolet	13 →
DS4	11 →
Xsara Picasso (N68)	99 →
FIAT	
Ulisse II (179)	08/02 →
FORD	
Galaxy	95 →
LANCIA	
Phedra	08/02 →
PEUGEOT	
307/307 II	01 →
307 CC I/II	03 →
308/308 CC	07 →
807	06/02 →
1007	05 →
2008	03/13 →
RENAULT	
Fluence	10 →

PF0131

SEAT	
Cordoba II	02 →
Ibiza	96 →
Ibiza Sportcoupè	03/08 →
Leon	99 →
Leon Cupra	05/03 →
Toledo	99 →
SKODA	
Fabia II (6Y)	01 →
Fabia III	03/07 →
Octavia II/III/Combi	00 →
Octavia IV	11/12 →
Rapid	07/12 →
Roomster	06 →
Superb (3U)	02 →
Yeti	09 →
VOLKSWAGEN	
Beetle Cabriolet (5C7)	12 →
Bora/Variant (J6)	97 →
Corrado	88 →
Eos	03/06 →
Golf III/IV/V Plus	96 →
Golf VI/VII	11/08 →
Golf VI Cabriolet (517)	11 →
New Beetle	98 →
New Beetle Cabrio	03 →
Passat II	00 →
Passat (362)/(365)	10 →
Polo Variant	95 →
Polo IV (9N)	01 →
Polo V	06/09 →
Scirocco II (1K)	10/08 →
Sharan	97 →
Vento	96 →

PF0132

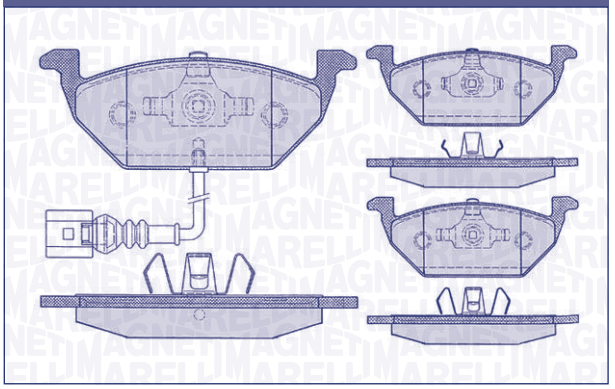

F/R	WVA	W×H×Th (mm)	SiS	Nr. Pz	W.i.	i	Extra kit [Opt]

AUDI	
A 3 II (1K)	06/03 →
A 3 Cabriolet	04/08 →
A 3 Sportback	04 →
SEAT	
Altea	04 →
Altea XL (5P	10/06 →
Ibiza	03/08 →
Ibiza Sportcoupè	03/08 →
Leon II (1K)	05 →
Toledo III (1K)	10/04 →
Toledo IV	07/12 →
SKODA	
Fabia III	03/07 →
Fabia SW (6Y)	07/01 →
Favia SW (Combi)	10/07 →
Fabia Praktik	05/03 →
Octavia III	06/04 →
Roomster	06 →
Yeti	09 →
VOLKSWAGEN	
Beetle (Maggiolino)	11 →
Beetle Cabriolet (5C7)	12 →
Caddy III (1K)	03/04 →
Golf IV	99 →
Golf V/Plus	11/03 →
Golf VI	11/08 →
Golf Variant V	07 →
Jetta III (1K)	08/05 →
Jetta IV (5K)	03/11 →
Polo IV (9N)	03 →
Polo V (6R)	06/09 →

PF0133

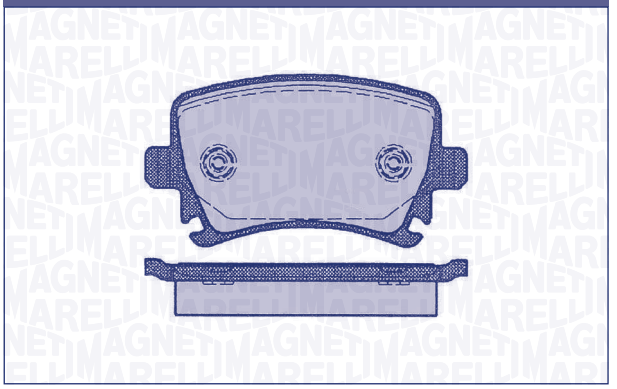

F/R	WVA	W×H×Th (mm)	SiS	Nr. Pz	W.i.	i	Extra kit [Opt]
R	23914	105,5×56×17	LG	4x	[-]	–	OK039/ OK085

AUDI	
A 3 II (8P)	06/03 →
A 3 Cabriolet	04/08 →
A 3 Sportback	04 →
A 6 III Allroad (4FH)	05/06 →
SEAT	
Altea	04 →
SKODA	
Octavia III	06/04 →
Superb II (1K_5K)	07/08 →
Yeti	09 →
VOLKSWAGEN	
Caddy III	03/04 →
Golf V Plus/VI	03/05 →
Touran/Touran Cross	03 →

PF0134

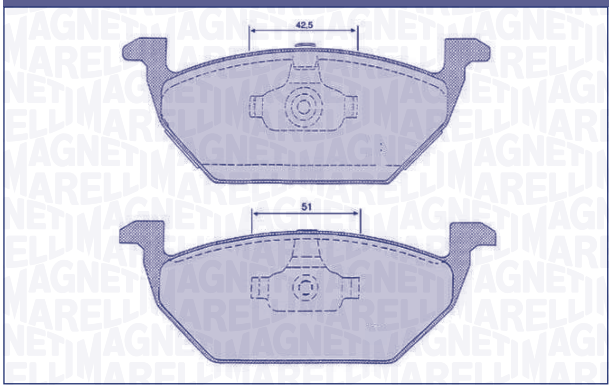

F/R	WVA	W×H×Th (mm)	SiS	Nr. Pz	W.i.	i	Extra kit [Opt]
F	23130 23131	146×54,7×19,5	ATE	2x 2x	[-]	–	

AUDI	
A 1	10 →
A 3	96 →
SEAT	
Ibiza	03/08 →
Ibiza Sportcoupè	03/08 →
Leon	99 →
Mii (KF1)	10/11 →
Toledo	99 →
SKODA	
Citigo	10/11 →
Fabia I	99 →
Octavia II	00 →
Rapid	07/12 →
VOLKSWAGEN	
Beetle (Maggiolino)	11 →
Bora/Variant (J6)	98 →
Fox	06/05 →
New Beetle	98 →
Polo V (6R)	06/09 →
Up!	01/12 →

PF0135

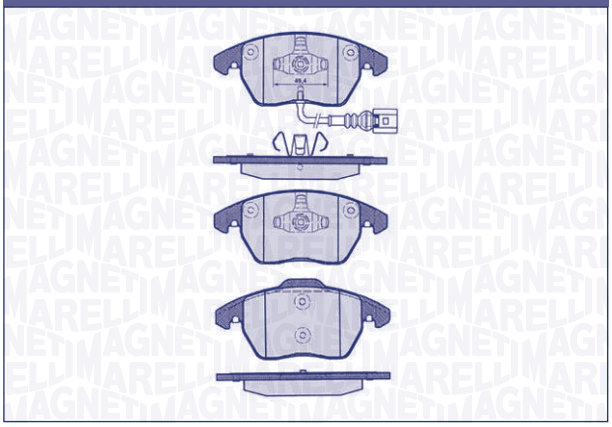

F/R	WVA	W×H×Th (mm)	SiS	Nr. Pz	W.i.	i	Extra kit [Opt]
F	23587 23588 23589	155,1×66×20,1 156,3×71,3×20,1	ATE	2x 1x 1x	1x	w.i. L=155mm	

AUDI	
A1 (5K)	10 →
A 3	06/03 →
TT II	08 →
SEAT	
Altea	04 →
Altea XL (5P)	10/06 →
Ibiza/Sportcoupè	03/08 →
Leon II	05 →
Mii (KF1)	10/11 →
Toledo III/IV	10/04 →
SKODA	
Citigo	10/11 →
Octavia III	06/04 →
Rapid	07/12 →
Superb II	07/08 →
Yeti	09 →
VOLKSWAGEN	
Beetle (Maggiolino)	11 →
Beetle Cabriolet (5C7)	12 →
Caddy III (1K)	03/04 →
Eos	03/06 →
Golf V	11/03 →
Golf VI	11/08 →
Jetta III/IV (5K)	08/06 →
Passat III	06/05 →
Passat CC	06/08 →
Passat AllTrack (365)	01/12 →
Polo V (6R)	06/09 →
Scirocco II (1K)	10/08 →
Touran	03 →
Touran Cross	07 →

PF0136

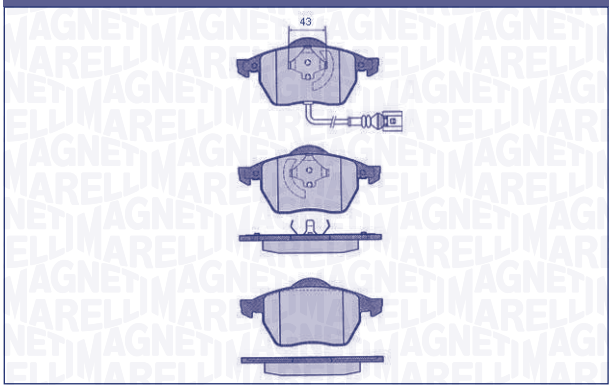

F/R	WVA	W×H×Th (mm)	SiS	Nr. Pz	W.i.	i	Extra kit [Opt]
F	21911 23392	156,4×74,2×19	ATE	2x 1x 1x	1x	w.i. L=155mm	

AUDI	
A 3 Quattro	97 →
A 4	00 →
A 6	00 →
S 3	08/98 →
TT/Roadster	04/99 →
SEAT	
Leon	99 →
SKODA	
Octavia II	00 →
VOLKSWAGEN	
Bora V6/Variant (J6)	98 →
Golf IV	00 →
New Beetle RSi	00 →
Passat II / Variant	00 →

PF0137

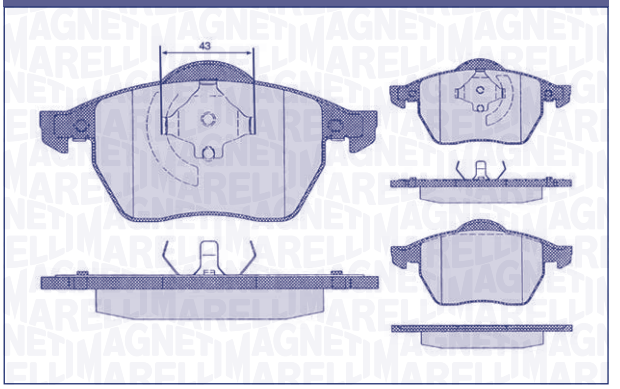

F/R	WVA	W×H×Th (mm)	SiS	Nr. Pz	W.i.	i	Extra kit [Opt]
F	20676 21911	156,4×74,2×19	ATE	2x 1x 1x	[-]	–	

AUDI	
A 3	96 →
TT	98 →
SEAT	
Leon	99 →
Toledo	99 →
VOLKSWAGEN	
Bora	97 →
Bora VR5	97 →
Golf III	96 →
Golf IV	97 →
Passat II	93 →
Vento	96 →

PF0138

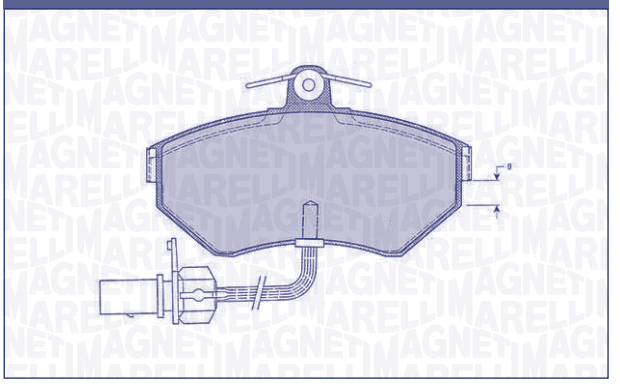

F/R	WVA	W×H×Th (mm)	SiS	Nr. Pz	W.i.	i	Extra kit [Opt]
F	21945 23393	119×69,5×19,5	LG	2x 2x	2x	w.i. L=210mm	OK032

AUDI	
A 4	97 →
A 4 II	11/00 →
VOLKSWAGEN	
Passat II	96 →

PF0139

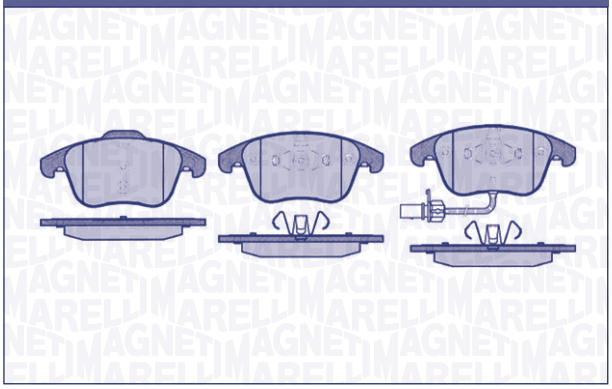

F/R	WVA	W×H×Th (mm)	SiS	Nr. Pz	W.i.	i	Extra kit [Opt]
F	24705 24706 24707	155,1×66,6×19,5 155,1×71,9×20,6	ATE	2x 1x 1x	1x	w.i. L=280mm	

AUDI	
A 4 III (8K2)	07/11 →
A 4 Avant III (8K)	06/08 →
A 4 Allroad (8KH)	09 →
A 5 (8T)	05/09 →
A 5 Sportback (8T)	06/07 →
A 5 Cabriolet (8T)	03/09 →

PF0140

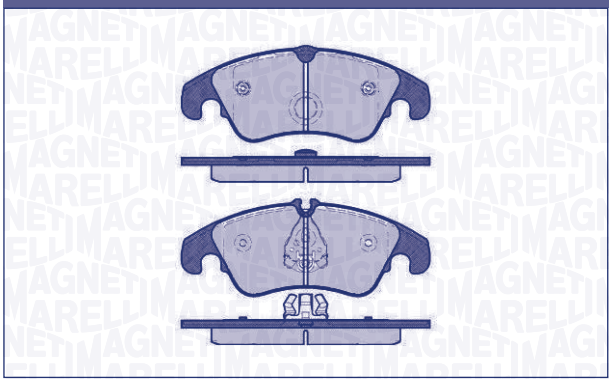

F/R	WVA	W×H×Th (mm)	SiS	Nr. Pz	W.i.	i	Extra kit [Opt]
F	24264 24265	188,1×72,9×19 188,1×73,6×19	ATE	2x 2x	1x	w.i. L=300mm	

AUDI	
A 4 III (8K2)(8K5)	11/07 →
A 4 Allroad	09 →
A 5 (8K)	06/07 →
A 5 Sportback	06/07 →
A 6 IV (4G2)	02/11 →
A 6 Allroad (1LL)	03/12 →
A 7	10 →
Q5	11/08 →
S 5 (8K)	06/07 →

PF0141

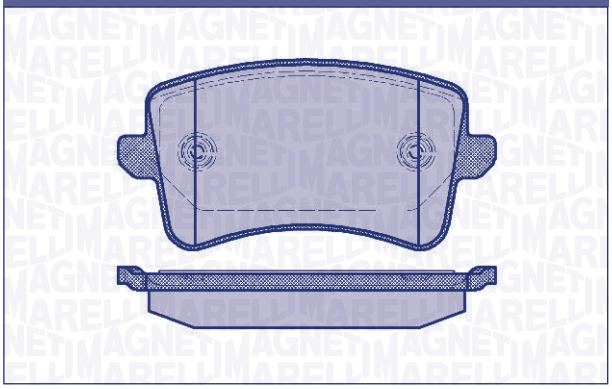

F/R	WVA	W×H×Th (mm)	SiS	Nr. Pz	W.i.	i	Extra kit [Opt]
R	24606	116,4×58,5×17,5	LG	4x	[-]	–	OK039

AUDI	
A 4 III (8K2)(8K5)	11/07 →
A 4 Allroad	09 →
A 5 (8T)(8K)	08 →
A 5 Sportback	06/07 →
A 5 Cabriolet	09 →
A 6 IV (4G2)	02/11 →
A 7	10 →
Q5	11/08 →
S5 (8K)	06/07 →

PF0142

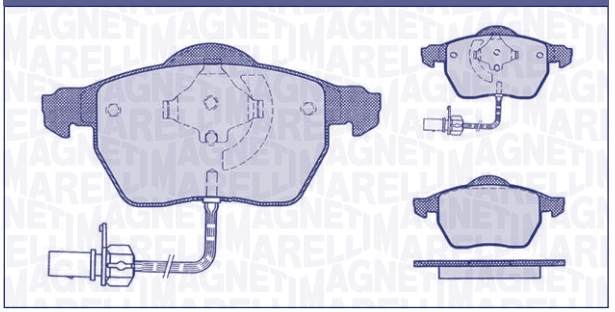

F/R	WVA	W×H×Th (mm)	SiS	Nr. Pz	W.i.	i	Extra kit [Opt]
F	23018 23007 23018 23019	156,4×74,2×19,5	ATE	2x 1x 1x	2x	w.i. L=200mm	

AUDI	
A 4 II (8E)	11/00 →
A 4 Cabrio (8H)	04/02 →
A 6 II	97 →
A 6 III (8F)	04/04 →
SEAT	
Exeo	03/09 →
SKODA	
Superb (3U)	02 →
VOLKSWAGEN	
Passat II	11/00 →

PF0143

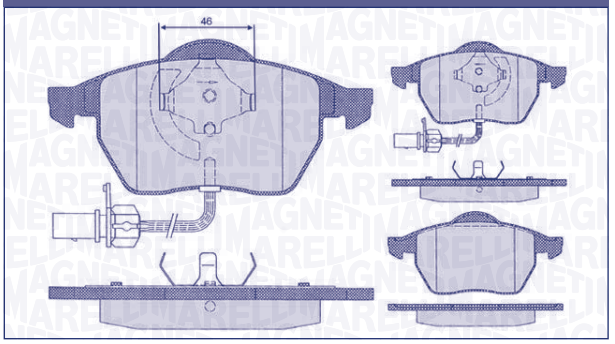

F/R	WVA	W×H×Th (mm)	SiS	Nr. Pz	W.i.	i	Extra kit [Opt]
F	20676 21938 21939	156,4×74,2×19	ATE	2x 1x 1x	2x	w.i. L=200mm	

AUDI	
A 4	08/97 →
A 4 II	11/00 →
A 6	97 →
A 6 II	97 →
VOLKSWAGEN	
Passat II	07/98 →

PF0144

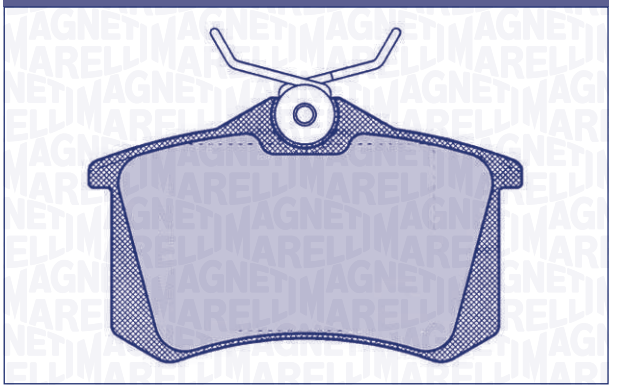

F/R	WVA	W×H×Th (mm)	SiS	Nr. Pz	W.i.	i	Extra kit [Opt]
R	20961	87×53×15	LG	4x	[-]	–	OK039/ OK041

PEUGEOT	
306	94 →
405	87 →
RENAULT	
Megane	→ 04/99
Megane Scenic I/II	99 →
Gran Scenic II/III	04 →
Scenic III	02/09 →
SEAT	
Alhambra	95 →
Altea	04 →
Arosa	97 →
Cordoba	93 →
Exeo	03/09 →
Ibiza	93 →
Leon II	09/05 →
Toledo	91 →
SKODA	
Fabia I	99 →
VOLKSWAGEN	
Corrado	87 →
Golf II/III/IV	83 →
Jetta	86 →
Lupo	99 →
Passat/Passat II	88 →
Scirocco	86 →
Vento	92 →

PF0145

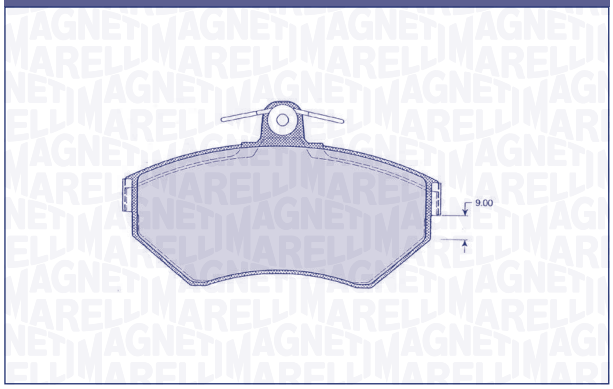

F/R	WVA	W×H×Th (mm)	SiS	Nr. Pz	W.i.	i	Extra kit [Opt]
F	21945	119×69,5×19,4	LG	4x	[-]	–	OK032

AUDI	
A 4	97 →
SEAT	
Arosa	97 →
VOLKSWAGEN	
Golf III Cabrio	95 →
Golf III	95 →
Passat II	96 →

PF0146

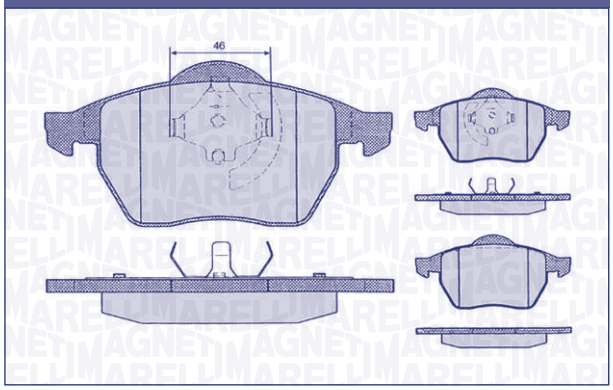

F/R	WVA	W×H×Th (mm)	SiS	Nr. Pz	W.i.	i	Extra kit [Opt]
F	20676 21624	156,4×74,2×19	ATE	2x 1x 1x	[-]	–	

VOLKSWAGEN	
Passat II	96 →

PF0147

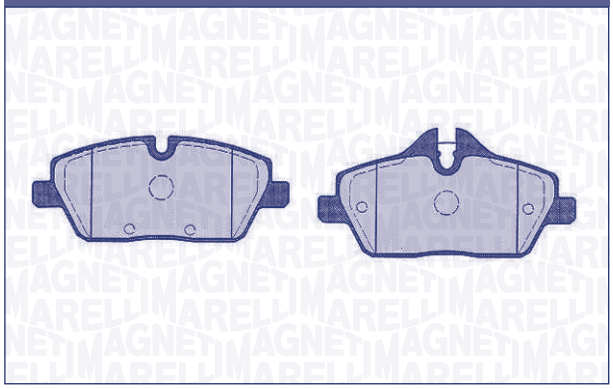

F/R	WVA	W×H×Th (mm)	SiS	Nr. Pz	W.i.	i	Extra kit [Opt]
F	23915 23916	131,6×53,3×17,8 131,6×65,2×17,8	LG	2x 2x	[o]	–	OK032/ OK063/ OK055

BMW	
116i (E87)	04 →
118d (E87)	04 →
MINI (BMW)	
Cooper One D (R50_R53)	03/07 →
Cooper One S (R50_R53)	10/06 →
Clubman (R55)	10/07 →
ClubVan (R55)	12/12 →
Coupe (R58)	09/11 →
Cooper (R56)	07 →
Cabriolet (R57) One	03/10 →
Cabriolet (R57) Cooper	03/09 →
Roadster (R59)	02/12 →

PF0148

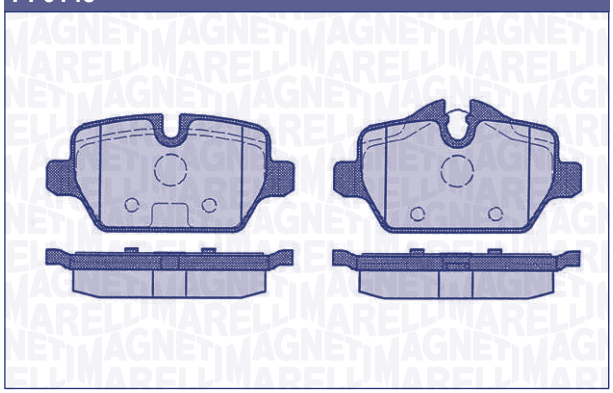

F/R	WVA	W×H×Th (mm)	SiS	Nr. Pz	W.i.	i	Extra kit [Opt]
R	23623 23624	95,4×45×17,2 95,4×52,9×17,2	LG	2x 2x	[-]	–	OK032/ OK064

BMW	
1 (E87)	04 →
3 (E90)	01/05 →

PF0149

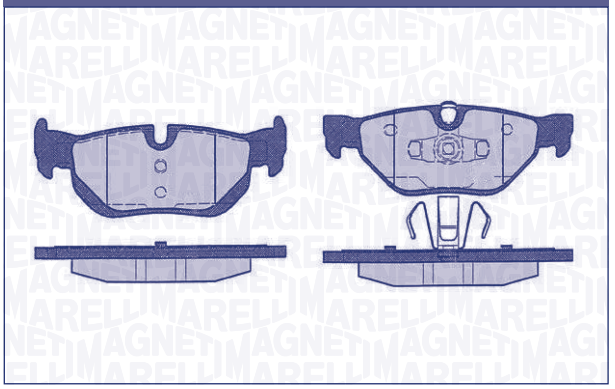

F/R	WVA	W×H×Th (mm)	SiS	Nr. Pz	W.i.	i	Extra kit [Opt]
R	23926 23927	123,1×43,8×17,3 123,1×48,3×17,3	ATE	2x 2x	[-]	–	

BMW	
1 (E87)	04 →
1 Coupe (E82)	10/07 →
1 Cabriolet (E88)	03/08 →
3 (E91)	01/05 →
3 (E90)	01/05 →
3 Coupe (E92)	06 →
3 Cabrio (E93)	03/07 →
X1	10/09 →

PF0150

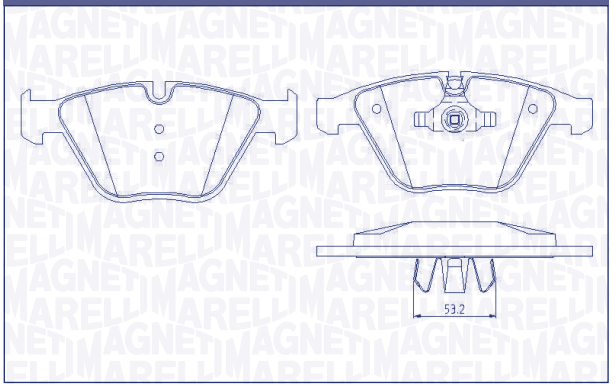

F/R	WVA	W×H×Th (mm)	SiS	Nr. Pz	W.i.	i	Extra kit [Opt]
F	23313 24255	155,1×68,3×20,2	ATE	2x 2x	[-]	–	

BMW	
3 (E90)	01/05 →
3 (E91) Touring	09/05 →
3 (E92) Coupè	06 →

PF0151

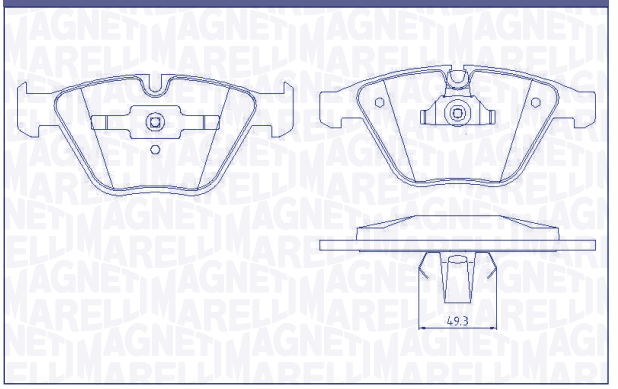

F/R	WVA	W×H×Th (mm)	SiS	Nr. Pz	W.i.	i	Extra kit [Opt]
F	23311 23312 23347	155,1×68,3×20,2	ATE	2x 2x	[-]	–	

BMW	
5 Touring (E61)	05/04 →
5 BN (E60)	10/03 →
6 (E63-64)	12/03 →
7 (E65)	01 →

PF0152

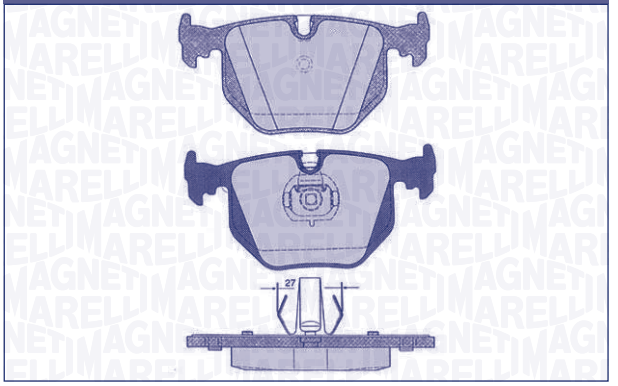

F/R	WVA	W×H×Th (mm)	SiS	Nr. Pz	W.i.	i	Extra kit [Opt]
F	21767 23183 23474	156,3×63,3×20 155,4×63,3×20	ATE	2x 2x	[o]	–	

BMW	
3 (E46)	06/00 →
7 (E38)	95 →
M5	98 →
Z8 (E31)	98 →
X3	02/04 →
X5	00 →
LAND ROVER	
Range Rover III	02/02 →

PF0153

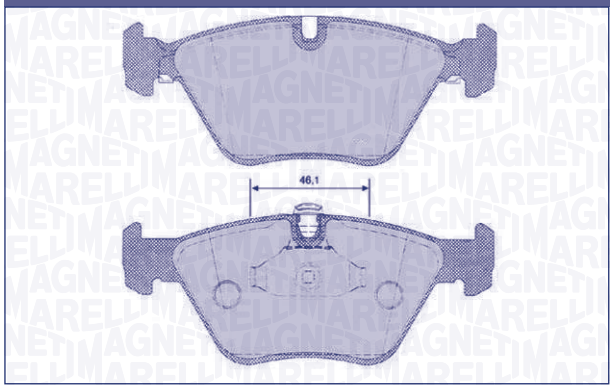

F/R	WVA	W×H×Th (mm)	SiS	Nr. Pz	W.i.	i	Extra kit [Opt]
F	21767 23183 23474	156,3×63,3×20 155,4×63,3×20	ATE	2x 2x	[o]	–	

BMW	
3 (E46)	99 →
M3 Coupè	01 →
M3 Cabio	01 →
X3	02/04 →
X3 (F25) xDrive	10 →

PF0154

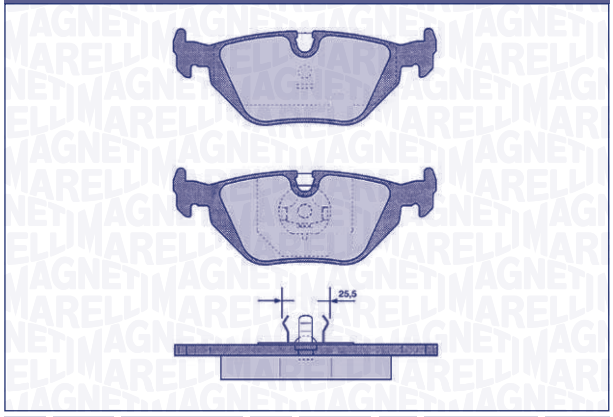

F/R	WVA	W×H×Th (mm)	SiS	Nr. Pz	W.i.	i	Extra kit [Opt]
R	20180 20181 21607	123×45×17	ATE	2x 2x	[-]	–	

BMW	
3	91 →
7	90 →
Z3	97 →
Z3 Coupè	97 →
Z3 Roadster	97 →

PF0155

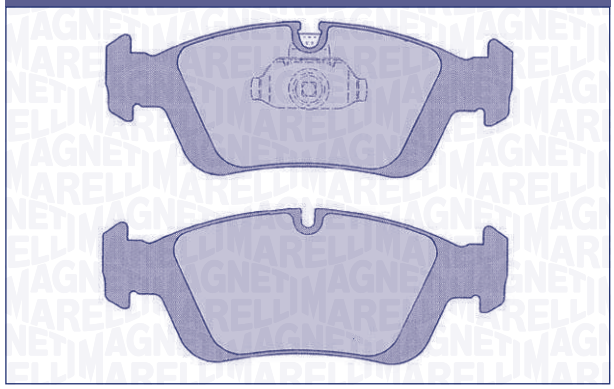

F/R	WVA	W×H×Th (mm)	SiS	Nr. Pz	W.i.	i	Extra kit [Opt]
F	21644 23287 23288	150,2×57,8×17,8 151,5×57,8×17,8	ATE	2x 2x	[-]	–	OK019

BMW	
3 (E46)	98 →
Z3	97 →
Z4	10/03 →

PF0156

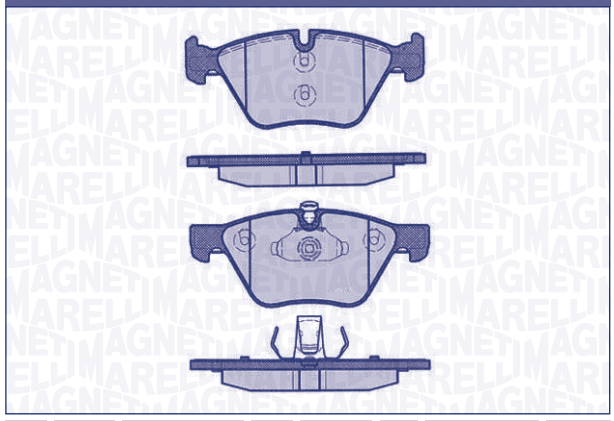

F/R	WVA	W×H×Th (mm)	SiS	Nr. Pz	W.i.	i	Extra kit [Opt]
F	23794	154,8×63,3×20 155,3×63,3×20	ATE	2x 2x	[o]	–	OK047

BMW	
3 (E90) No M-Technik	01/05 →
3 (E91) No M-Technik	01/05 →
3 (E92) No M-Technik	06 →
3 (E93) No M-Technik	03/07 →

PF0157

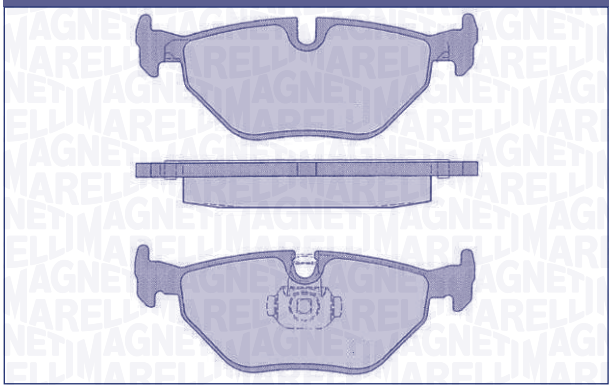

F/R	WVA	W×H×Th (mm)	SiS	Nr. Pz	W.i.	i	Extra kit [Opt]
R	21933 21934 21935	123,1×43,7×17,3	ATE	2x 2x	[o]	–	OK022

BMW	
3 (E46)	98 →
3 Compact (E46)	01 →
3 Cabrio (E46)	00 →
Z4	10/03 →
Z4 Coupe	03/06 →
MG	
ZT	06/01 →
ZT-T	06/01 →
ROVER	
75 (RJ)	98 →
75 SW (RJ)	01 →
SAAB	
9-5 BN/SW (YS3E)	97 →

PF0158

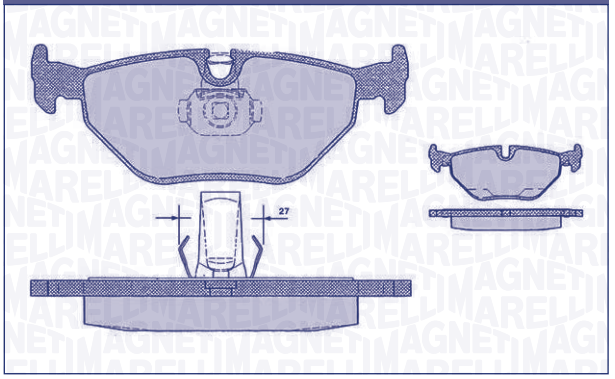

F/R	WVA	W×H×Th (mm)	SiS	Nr. Pz	W.i.	i	Extra kit [Opt]
R	21690 21691 21891	121,9×45×17,3 123,1×45×17,3	ATE	2x 2x	[o]	–	

BMW	
5 (E39)	09/95 →

PF0159

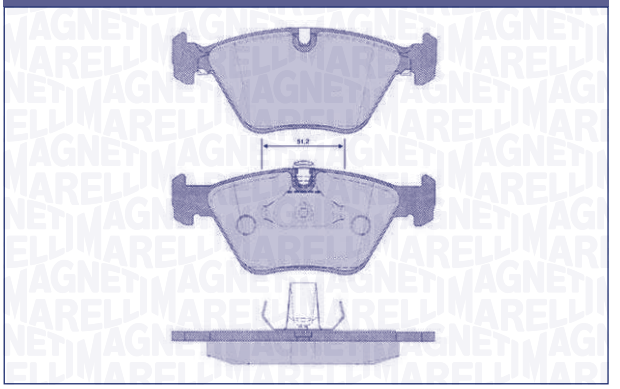

F/R	WVA	W×H×Th (mm)	SiS	Nr. Pz	W.i.	i	Extra kit [Opt]
F	21677 21990	156,3×63,3×20 155,3×63,3×20	ATE	2x 2x	[o]	–	

BMW	
3 (E46)	99 →
5 (E39)	95 →

PF0160

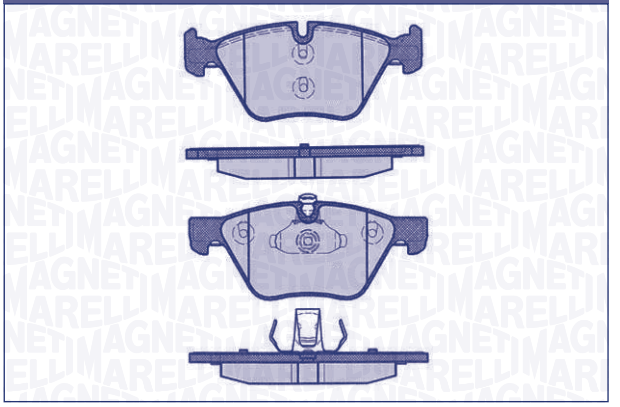

F/R	WVA	W×H×Th (mm)	SiS	Nr. Pz	W.i.	i	Extra kit [Opt]
F	21676 23794 23968	154,8×63,3×20 155,3×63,3×20	ATE	2x 2x	[o]	–	OK047

BMW	
3 (E90)	01/05 →
3 (E91)	01/05 →
3 (E93)	03/07 →
5 (E60)	07/03 →
Z4 (E89) sDrive	05/09 →

PF0161

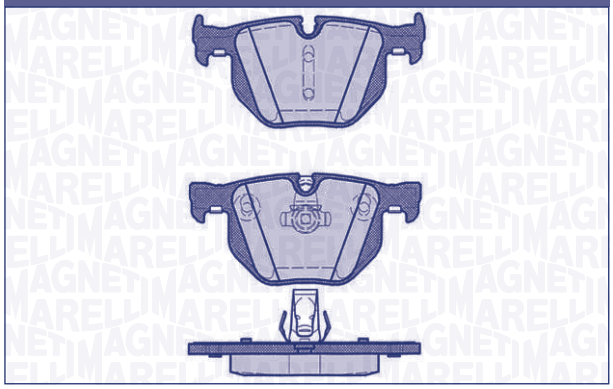

F/R	WVA	W×H×Th (mm)	SiS	Nr. Pz	W.i.	i	Extra kit [Opt]
R	23447 23732	122×58,2×17 122×58,2×17	ATE	2x 2x	[o]	–	

BMW	
5 (E60)	07/03 →
5 Touring (E61)	05/04 →

PF0162

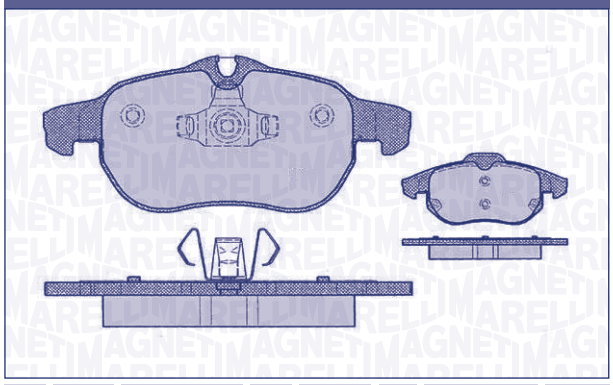

F/R	WVA	W×H×Th (mm)	SiS	Nr. Pz	W.i.	i	Extra kit [Opt]
F	23402 23403 23738	155,2×69×20,2 156,4×71,1×20,2	ATE	2x 2x	[o]	–	OK025

OPEL	
Signum (31068238 →)	06/03 →
Vectra C	08/02 →
Vectra SW C	03 →
Vectra GTS C	08/02 →
SAAB	
9-3 II (YS3F)	02 →
9-3 II Cabriolet (YS3F)	08/03 →
9-3X	02/09 →
VAUXHALL	
Signum (31068238 →)	06/03 →
Vectra C	08/02 →
Vectra SW C	03 →
Vectra GTS C	08/02 →

PF0163

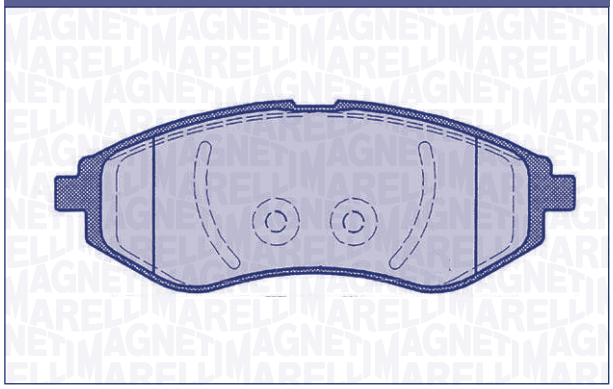

F/R	WVA	W×H×Th (mm)	SiS	Nr. Pz	W.i.	i	Extra kit [Opt]
F	23974	133,2×49×17,8	AK	4x	[-]	–	

CHEVROLET (DAEWOO)	
Aveo	06 →
Kalos	01/05 →
DAEWOO	
Aveo	04 →
Kalos	→ 05

PF0164

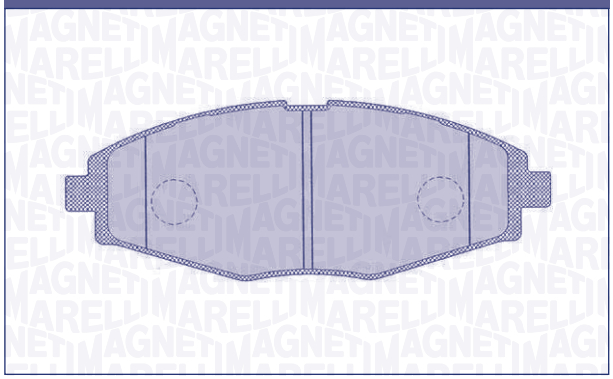

F/R	WVA	W×H×Th (mm)	SiS	Nr. Pz	W.i.	i	Extra kit [Opt]
F	23241	127×48×16	AK	4x	[-]	–	

CHEVROLET (DAEWOO)	
Matiz	01/05 →
Spark	05 →
Spark II	10 →
DAEWOO	
Matiz	98 →
Nexia	04 →

PF0165

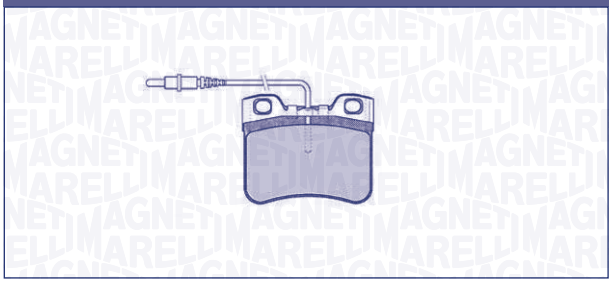

F/R	WVA	W×H×Th (mm)	SiS	Nr. Pz	W.i.	i	Extra kit [Opt]
F	21179 21289	71,8×60,6×17	ATE	4x	4x	w.i. L=175mm / kit molle in confezione / kit springs in the box	

CITROËN	
AX Van	88 →
Saxo	96 →

PF0166



F/R	WVA	W×H×Th (mm)	SiS	Nr. Pz	W.i.	i	Extra kit [Opt]
F	21076 21145	71,8×60,6×17	CT	4x	[-]	2 antirumore in confezione / 2 antinoise in the box	

CITROËN	
Saxo (3 fori ruota)	97 →
PEUGEOT	
106 Automatica	96 →
106 Rallye	96 →

PF0167

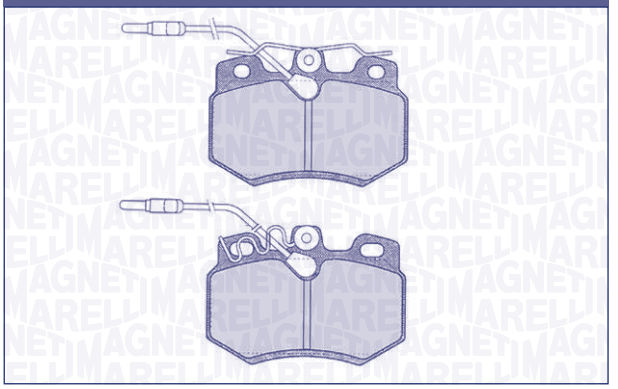

F/R	WVA	W×H×Th (mm)	SiS	Nr. Pz	W.i.	i	Extra kit [Opt]
F	20989 21080	90×62,8×17,5	LG	2x 1x 1x	4x	w.i. L=2×320/ 2×360mm	OK030

CITROËN	
C 15	88 →
Visa	85 →
Visa Diesel	83 →
Visa GTI	84 →

PF0168

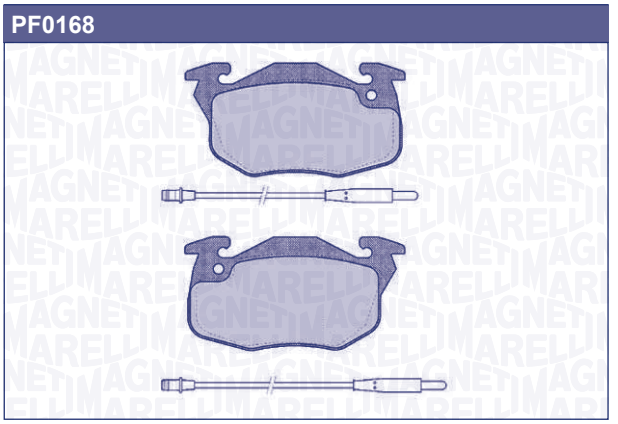

F/R	WVA	W×H×Th (mm)	SiS	Nr. Pz	W.i.	i	Extra kit [Opt]
F	20906 21414	105×54,3×18	BD	2x 2x	4x	w.i. L=2×290/ 2×370mm	

CITROËN	
AX Sport	95 →
AX	91 →
ZX Avantage Reflex	91 →
PEUGEOT	
106	91 →
106 Multi Van	91 →
205	83 →
305	82 →
306	93 →

PF0169

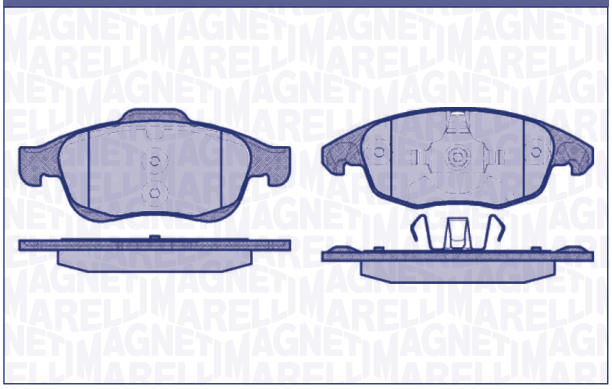

F/R	WVA	W×H×Th (mm)	SiS	Nr. Pz	W.i.	i	Extra kit [Opt]
F	24538 24539	155,3×64,5×19,0	ATE	2x 2x	[-]	–	

CITROËN	
C4 (B7)	11/09 →
C4 Picasso	06 →
Berlingo III	04/08 →
DS4	11 →
PEUGEOT	
Partner II	04/08 →
Partner Tepee	04/08 →
Ranch III	04/08 →

PF0170

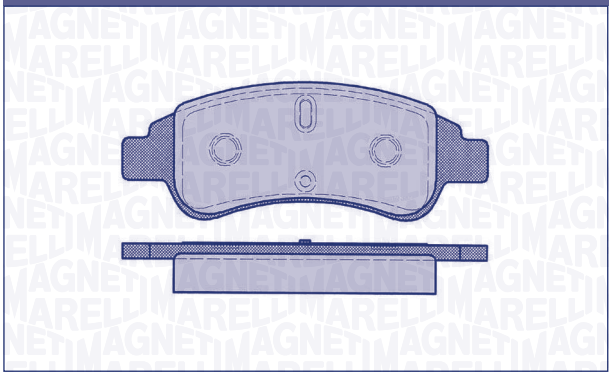

F/R	WVA	W×H×Th (mm)	SiS	Nr. Pz	W.i.	i	Extra kit [Opt]
F	23599 24101	136,9×51,6×19	BSC	4x	[-]	–	OK012/ OK038

CITROËN	
Berlingo	01 →
Berlingo II	03 →
C2 VTS	01/05 →
C3 Picasso	02/09 →
C4	05 →
C4 Coupe	05 →
Xsara	00 →
Xsara Picasso (N68)	01 →

PF0170

PEUGEOT	
206	05/04 →
207 SW	06/07 →
307	01 →
307 II	05 →
307 CC II	05 →
1007	05 →
Ranch II	03 →

PF0171

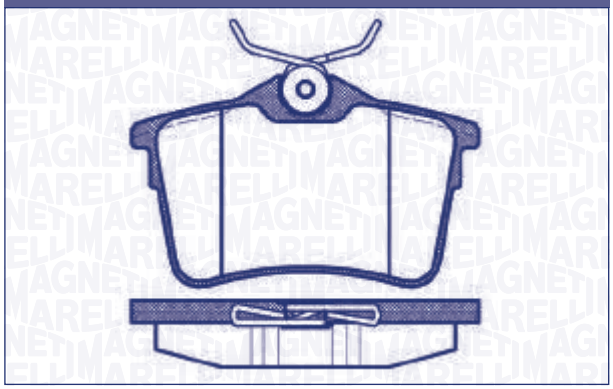

F/R	WVA	W×H×Th (mm)	SiS	Nr. Pz	W.i.	i	Extra kit [Opt]
R	24765	87,2×52,8×16,7	LG	4x	[-]	–	

CITROËN	
Berlingo III	04/08 →
PEUGEOT	
308 SW	05/08 →
Partner II	04/08 →
Partner Tepee	04/08 →

PF0172

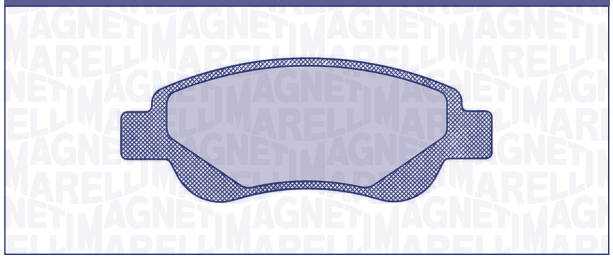

F/R	WVA	W×H×Th (mm)	SiS	Nr. Pz	W.i.	i	Extra kit [Opt]
F	23959	122,9×46,9×17,6	BSC	4x	[-]	–	OK012/ OK040

CITROËN	
C1	05 →
PEUGEOT	
107	05 →
TOYOTA	
Aygo	05 →

PF0173

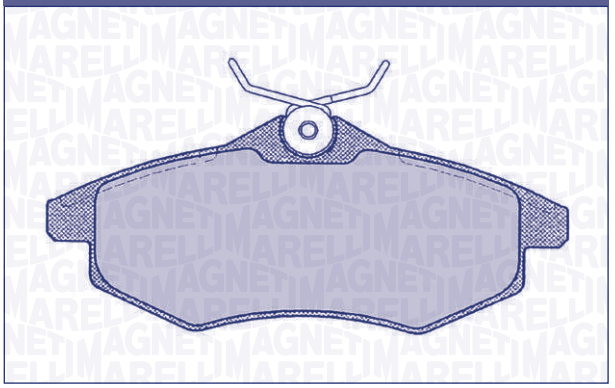

F/R	WVA	W×H×Th (mm)	SiS	Nr. Pz	W.i.	i	Extra kit [Opt]
F	23406 23407	122,8×53×19	LG	4x	[-]	–	OK032/ OK061

CITROËN	
C2	03 →
C3	02 →

PF0174

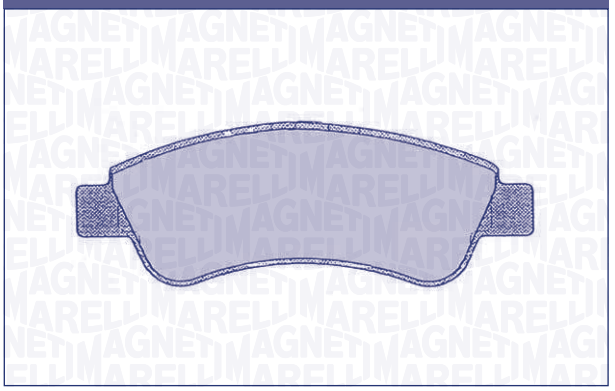

F/R	WVA	W×H×Th (mm)	SiS	Nr. Pz	W.i.	i	Extra kit [Opt]
F	23954	136,9×51,6×19	BSC	4x	[-]	–	OK012/ OK038

CITROËN	
C-Elysee	11/12 →
C4 Cactus	14 →
DS3	04/10 →
DS3 Cabriolet	13 →
PEUGEOT	
206	12/00 →
206 CC	03/01 →
208	03/12 →
207	05/06 →
301	12 →
307 (-ESP)	02/04 →
2008	03/13 →

PF0175

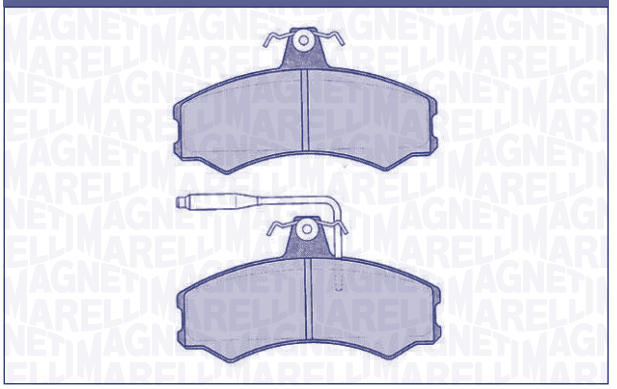

F/R	WVA	W×H×Th (mm)	SiS	Nr. Pz	W.i.	i	Extra kit [Opt]
F	20741 20787	130×71,2×19	LG	2x 2x	2x	w.i. L=130mm	OK032

ALFA ROMEO	
AR 6	85 →
CITROËN	
C 22/C 25	81 →
FIAT	
Ducato (280)	81 →
Talento (290)	89 →
MERCEDES	
MB 130 Unimog	82 →
MB 131 TD	82 →
PEUGEOT	
J5 Van	80 →

PF0176

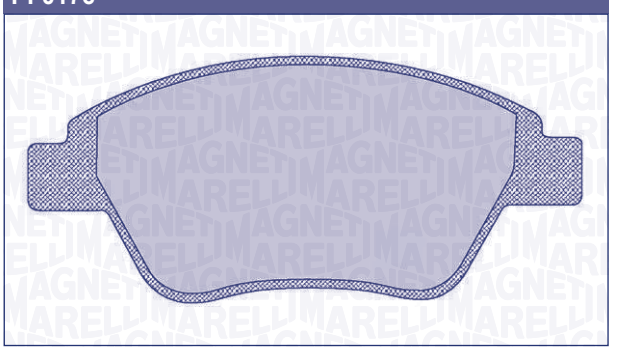

F/R	WVA	W×H×Th (mm)	SiS	Nr. Pz	W.i.	i	Extra kit [Opt]
F	23600	136,9×57×19	BSC	4x	[-]	–	OK012/ OK038

CITROËN	
Berlingo	01 →
C3	02/02 →
C4	05 →
C4 Coupe	05 →
Xsara	00 →
Xsara Picasso (N68)	01 →

PF0176

PEUGEOT	
206	07/03 →
207	05/06 →
207 CC	02/07 →
307	01 →
307 II	05 →
307 CC	12/03 →
307 CC II	05 →
1007	06/07 →
4008	05/12 →

PF0177

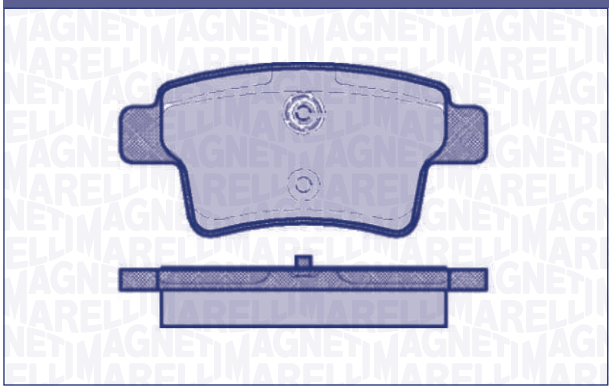

F/R	WVA	W×H×Th (mm)	SiS	Nr. Pz	W.i.	i	Extra kit [Opt]
R	24540	102,3×48,3×16,4	BSC	4x	[-]	–	OK012/ OK040/ OK074

CITROËN	
C4 Picasso	06 →
C4 Grand Picasso	06 →

PF0178

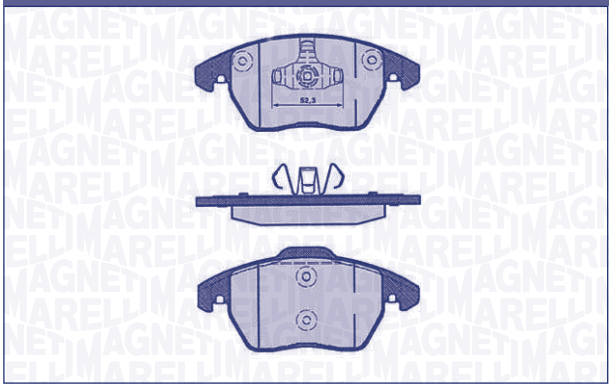

F/R	WVA	W×H×Th (mm)	SiS	Nr. Pz	W.i.	i	Extra kit [Opt]
F	23589 24153	155,1×66×18,8 156,3×71,3×18,8	ATE	2x 2x	[-]	–	

CITROËN	
C4	05 →
PEUGEOT	
307	02/04 →
3008	06/09 →
5008	09 →
RCZ	10 →

PF0179

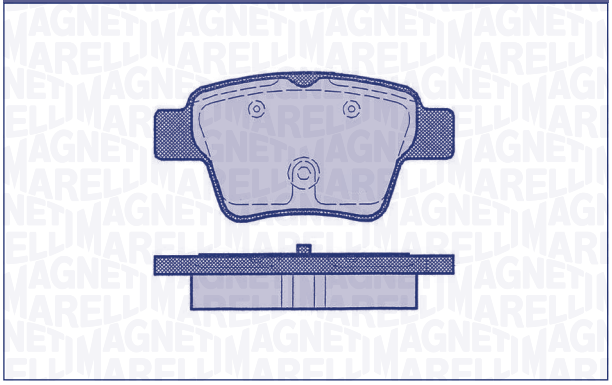

F/R	WVA	W×H×Th (mm)	SiS	Nr. Pz	W.i.	i	Extra kit [Opt]
R	24150 24737	95×46,9×17,6	BSC	4x	[-]	–	OK012/ OK040

CITROËN	
C4	05 →
C4 Coupe	05 →
PEUGEOT	
207	05/06 →
307 II	05 →
307 CC	12/03 →
307 CC II	05 →
407	04 →

PF0180

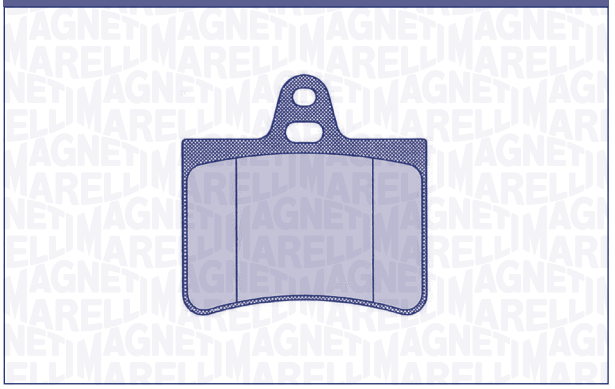

F/R	WVA	W×H×Th (mm)	SiS	Nr. Pz	W.i.	i	Extra kit [Opt]
R	23305	73×70,8×14,8	CT	4x	[-]	–	

CITROËN	
C5	00→
C5 II	04→

PF0181

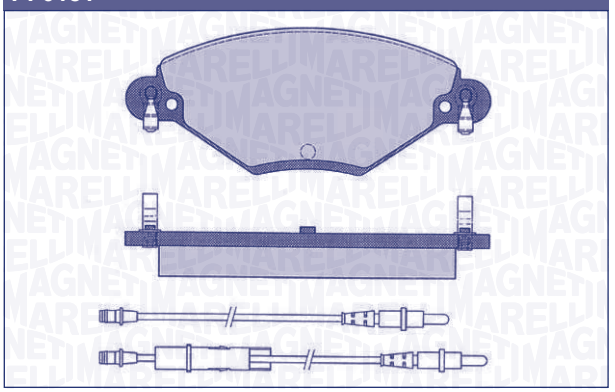

F/R	WVA	W×H×Th (mm)	SiS	Nr. Pz	W.i.	i	Extra kit [Opt]
F	23274 23277	148,8×59×17,8	BSC	4x	4x	w.i. L=2×180/ 2×410mm	OK012

CITROËN	
C5	06/01→
C5 II	04→

PF0182

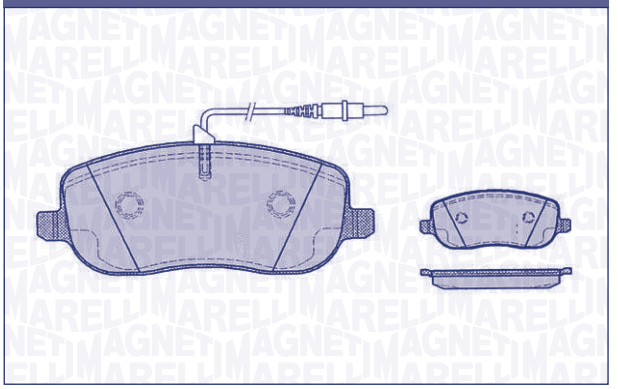

F/R	WVA	W×H×Th (mm)	SiS	Nr. Pz	W.i.	i	Extra kit [Opt]
F	20261 20267	146,7×60×19	LG	2x 2x	2x	w.i. L=165mm	OK037/ OK017

CITROËN	
C8	11/02→
Jumpy	02→
FIAT	
Scudo II	04→
Ulisse II (179)	08/02→
LANCIA	
Phedra (179)	08/02→
PEUGEOT	
807 (E)	06/02→
Expert (224)	00→

PF0183

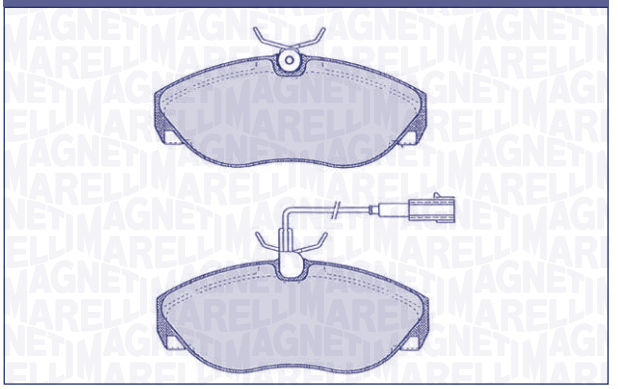

F/R	WVA	W×H×Th (mm)	SiS	Nr. Pz	W.i.	i	Extra kit [Opt]
F	21797 23602	145,1×61×19,5	LG	3x 1x	1x	w.i. L=300mm	OK030

CITROËN	
Jumper (230)	12/99→
FIAT	
Ducato (230)	12/99→
PEUGEOT	
Boxer	12/99→

PF0184

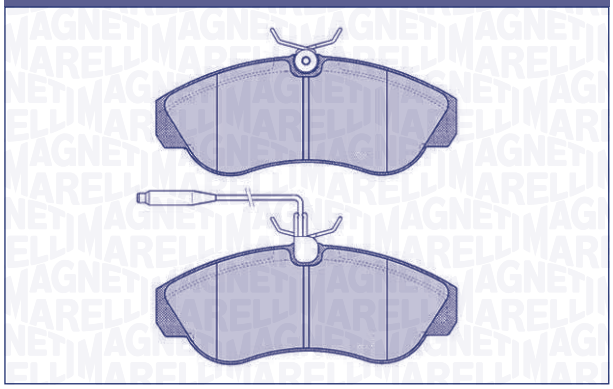

F/R	WVA	W×H×Th (mm)	SiS	Nr. Pz	W.i.	i	Extra kit [Opt]
F	21799 21800	160×64×19,5	LG	2x 2x	2x	w.i. L=200mm	OK030

CITROËN	
Jumper (230)	94 →
Relay	02/94 →
FIAT	
Ducato (230)	94 →
PEUGEOT	
Boxer	94 →
Boxer	94 →

PF0185

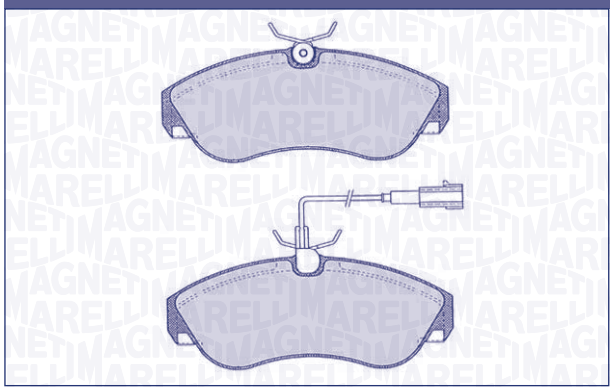

F/R	WVA	W×H×Th (mm)	SiS	Nr. Pz	W.i.	i	Extra kit [Opt]
F	21799 23603	160×64×19,5	LG	3x 1x	1x	w.i. L=300mm	OK030

CITROËN	
Jumper (230)	12/99 →
FIAT	
Ducato (230)	12/99 →
PEUGEOT	
Boxer	12/99 →

PF0186

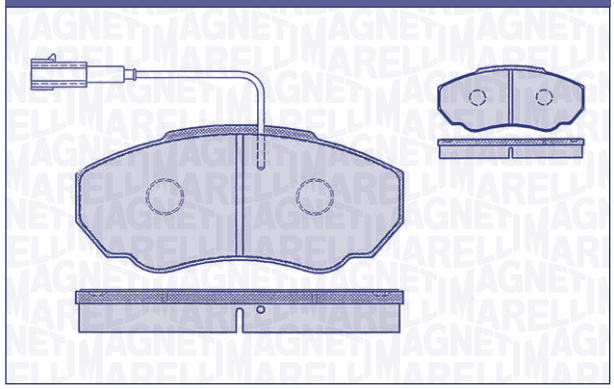

F/R	WVA	W×H×Th (mm)	SiS	Nr. Pz	W.i.	i	Extra kit [Opt]
F	23859 23917 23918	140,5×65,9×19,3	BR	3x 1x	1x	w.i. L=155mm	OK060/ OK013

CITROËN	
Jumper 10q. (244)	02 →
Jumper 14q. (244)	02 →
Relay II	04/02 →
FIAT	
Ducato 10-14q. (244)	01 →
PEUGEOT	
Boxer 10-14q.	02 →

PF0187

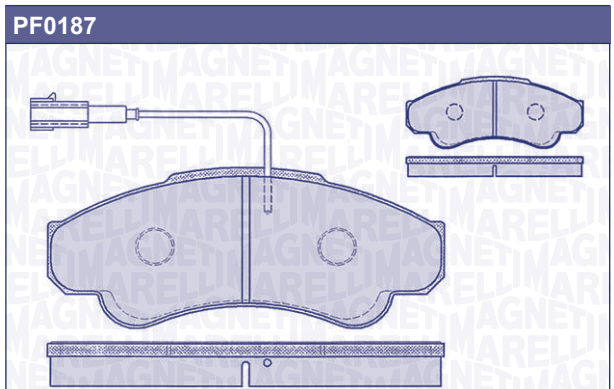

F/R	WVA	W×H×Th (mm)	SiS	Nr. Pz	W.i.	i	Extra kit [Opt]
F	23858 23919 23920	164,8×69,3×19,3	BR	3x 1x	1x	w.i. L=155mm	OK060/ OK013

CITROËN	
Jumper 18q. (244)	02 →
Relay II	06/02 →
FIAT	
Ducato 18q (244)	01 →
PEUGEOT	
Boxer 18q.	02 →

PF0188

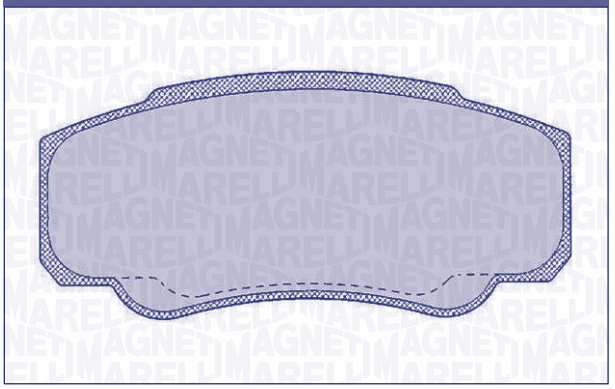

F/R	WVA	W×H×Th (mm)	SiS	Nr. Pz	W.i.	i	Extra kit [Opt]
R	23860 23921	109,7×49,6×20	BR	4x	[-]	–	OK060/ OK014

CITROËN	
Jumper 10q. (244)	02 →
Jumper 14q. (244)	02 →
Jumper 18q. (244)	02 →
FIAT	
Ducato 10-14q. (244)	01 →
Ducato 18q. (244)	01 →
PEUGEOT	
Boxer 10-14q.	02 →
Boxer 18q.	02 →

PF0189

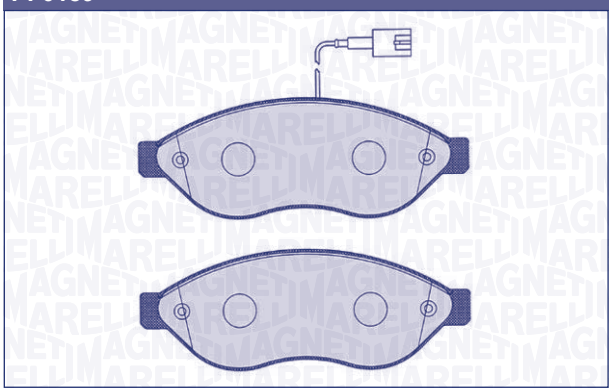

F/R	WVA	W×H×Th (mm)	SiS	Nr. Pz	W.i.	i	Extra kit [Opt]
F	24468 24469	169,3×61,5×19,2	BR	3x 1x	1x	w.i. L=160mm	OK060/ OK052/ OK053

CITROËN	
Jumper	06/06 →
FIAT	
Ducato (250)	06/06 →
PEUGEOT	
Boxer	06/06 →

PF0190

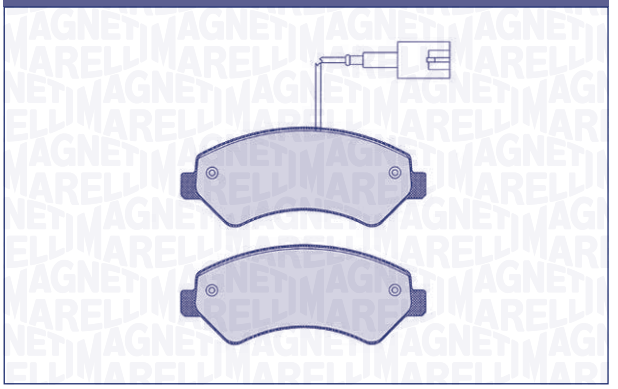

F/R	WVA	W×H×Th (mm)	SiS	Nr. Pz	W.i.	i	Extra kit [Opt]
F	24466 24467	169,3×69,2×19	BR	3x 1x	1x	w.i. L=160mm	OK060/ OK051/ OK066

CITROËN	
Jumper	06/11 →
FIAT	
Ducato (250)	06/11 →
PEUGEOT	
Boxer	06/06 →

PF0191

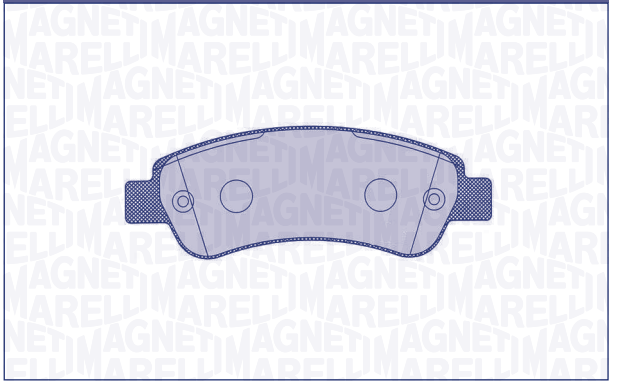

F/R	WVA	W×H×Th (mm)	SiS	Nr. Pz	W.i.	i	Extra kit [Opt]
R	24465	137×48,8×19	BR	4x	[-]	–	OK012/ OK038

CITROËN	
Jumper	06/06 →
FIAT	
Ducato (250)	06/06 →
PEUGEOT	
Boxer	06/06 →

PF0192

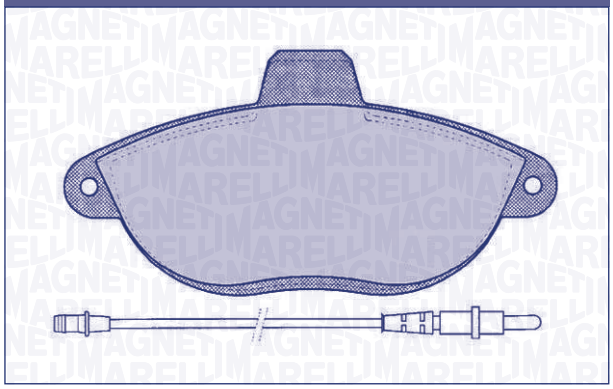

F/R	WVA	W×H×Th (mm)	SiS	Nr. Pz	W.i.	i	Extra kit [Opt]
F	23003 23040 23041 23042	140×68,8×19	BD	4x	2x	w.i. L=270mm	OK067

CITROËN	
Evasion	97 →
Jumpy EL	96 →
Synergie	97 →
FIAT	
Scudo EL	95 →
Scudo II	04 →
Ulisse (220)	94 →
PEUGEOT	
806	94 →
Expert EL (224)	96 →

PF0193

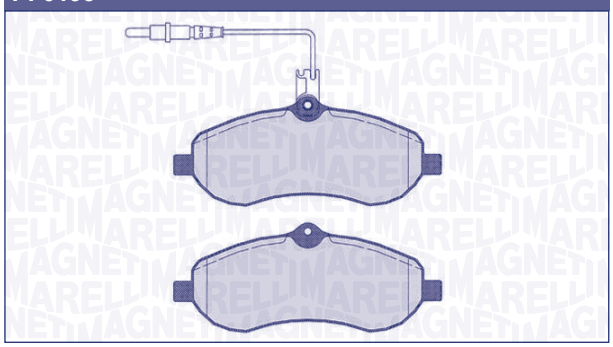

F/R	WVA	W×H×Th (mm)	SiS	Nr. Pz	W.i.	i	Extra kit [Opt]
F	24608	162×67,4×18,3	LG	3x 1x	1x	w.i. L=310mm	OK030/ OK059

CITROËN	
Jumpy	01/07 →
FIAT	
Scudo III (272)	01/07 →
PEUGEOT	
Expert	01/07 →

PF0194

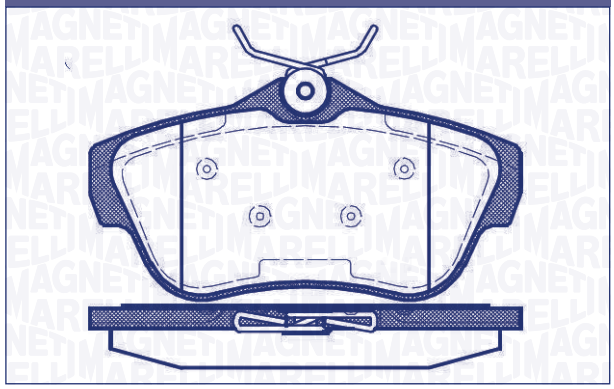

F/R	WVA	W×H×Th (mm)	SiS	Nr. Pz	W.i.	i	Extra kit [Opt]
R	24578	113,5×58,3×16,7	LG	4x	[-]	–	OK030/ OK065

CITROËN	
Jumpy	01/07 →
FIAT	
Scudo III (272)	01/07 →
PEUGEOT	
Expert	01/07 →

PF0195

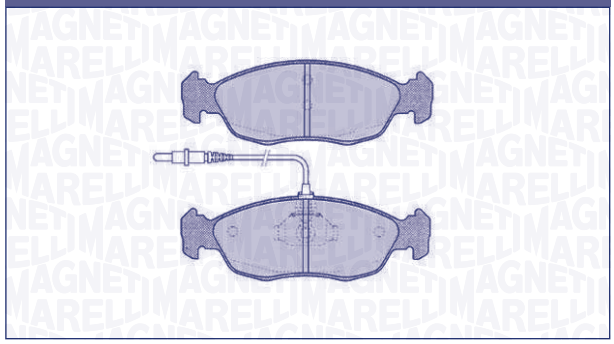

F/R	WVA	W×H×Th (mm)	SiS	Nr. Pz	W.i.	i	Extra kit [Opt]
F	21430 21432	141,4×47,5×17,2	ATE	2x 2x	2x	w.i. L=280mm	

PEUGEOT	
306	95 →
306 Cabrio	96 →
306 Multi Van	93 →

PF0196

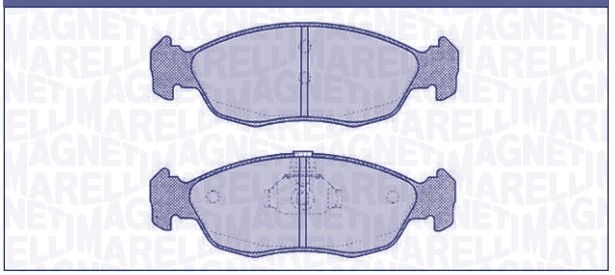

F/R	WVA	W×H×Th (mm)	SiS	Nr. Pz	W.i.	i	Extra kit [Opt]
F	21430 21827	141,4×47,5×17,2	ATE	2x 2x	[-]	–	

CITROËN	
Saxo	96 →
Xsara	96 →
Xsara Break	96 →
PEUGEOT	
106	91 →

PF0197

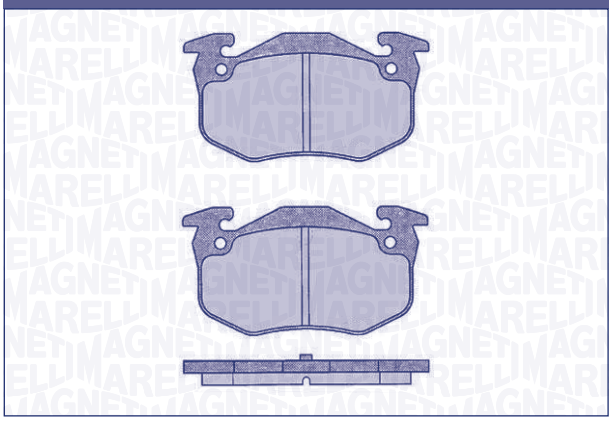

F/R	WVA	W×H×Th (mm)	SiS	Nr. Pz	W.i.	i	Extra kit [Opt]
R	20973 20974	105×56×11	BD	2x 2x	[-]	–	

CITROËN	
Saxo VTS	96 →
Xsara	00 →
ZX	91 →
PEUGEOT	
205	84 →
205 Cabrio	86 →
206 Gti	98 →
305	86 →
RENAULT	
R 5 Super	85 →
R 9	84 →
R 11	84 →
Clio III (BO)	01 →

PF0198

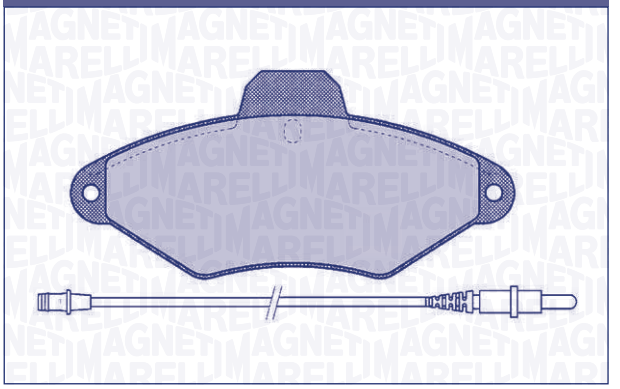

F/R	WVA	W×H×Th (mm)	SiS	Nr. Pz	W.i.	i	Extra kit [Opt]
F	21631	131×60,5×17	BD	4x	4x	w.i. L=2×155/ 2×365mm	

CITROËN	
Xantia Break	94 →

PF0199

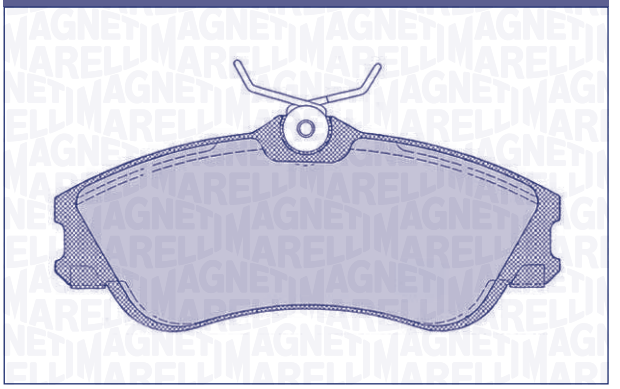

F/R	WVA	W×H×Th (mm)	SiS	Nr. Pz	W.i.	i	Extra kit [Opt]
F	23346	130×56,3×19	LG	4x	[-]	4 antirumore in confezione / 4 antinoise in the box	OK030

CITROËN	
Xsara	97 →
Xsara Picasso (N68)	99 →

PF0200

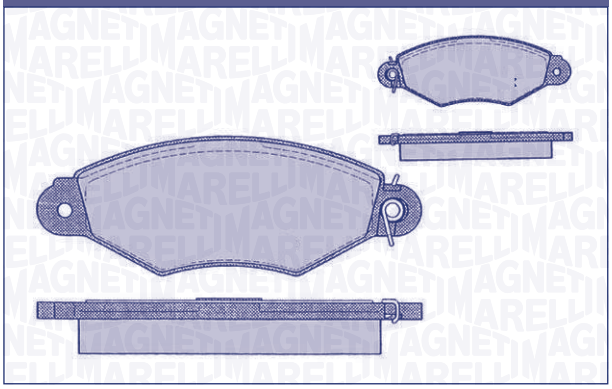

F/R	WVA	W×H×Th (mm)	SiS	Nr. Pz	W.i.	i	Extra kit [Opt]
F	21980 21981	130,8×47,2×18	BSC	2x 2x	[-]	–	OK034

CITROËN	
Xsara	96 →
NISSAN	
Kubistar	08/03 →
PEUGEOT	
306	97 →
306 Cabriolet	97 →
RENAULT	
Kangoo	98 →

PF0201

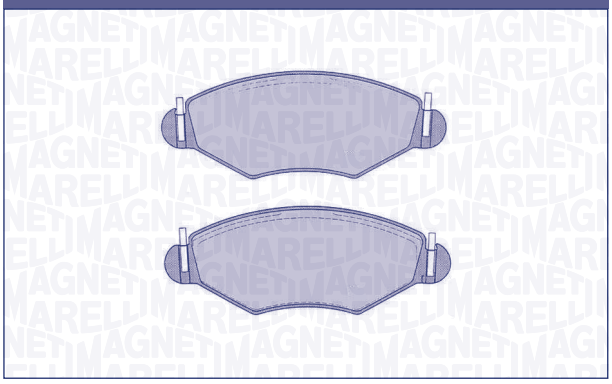

F/R	WVA	W×H×Th (mm)	SiS	Nr. Pz	W.i.	i	Extra kit [Opt]
F	23597 23598	130,9×47,2×18	BSC	2x 2x	[-]	kit 8 molle in confezione / Kit 8 springs in the box	OK012

CITROËN	
Xsara	97 →
PEUGEOT	
206 Tre volumi	03/07 →
206 (-ABS)	04/00 →
206	10 →
306 (-ABS)	00 →

PF0202

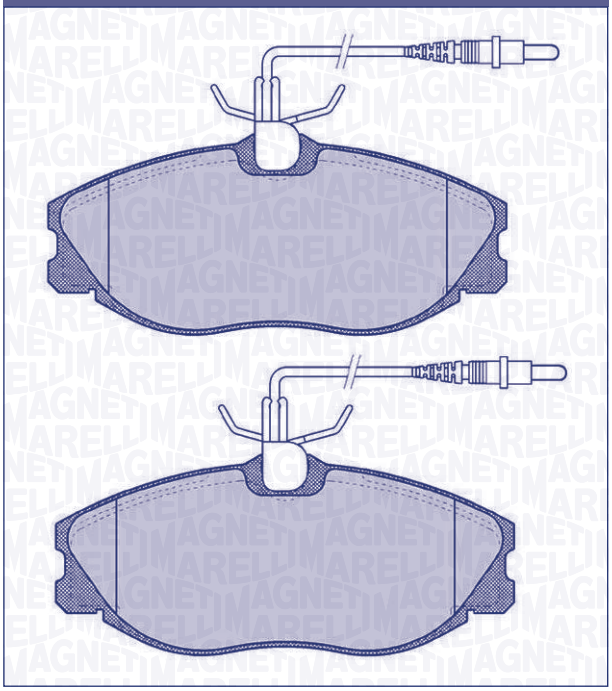

F/R	WVA	W×H×Th (mm)	SiS	Nr. Pz	W.i.	i	Extra kit [Opt]
F	21674 21886	130×56×19	LG	2x 2x	4x	w.i. L=2×280/ 2×310mm	OK030

CITROËN	
Xsara	04/97 →
ZX	05/96 →
PEUGEOT	
306	03/96 →
406	95 →
607	00 →

PF0203

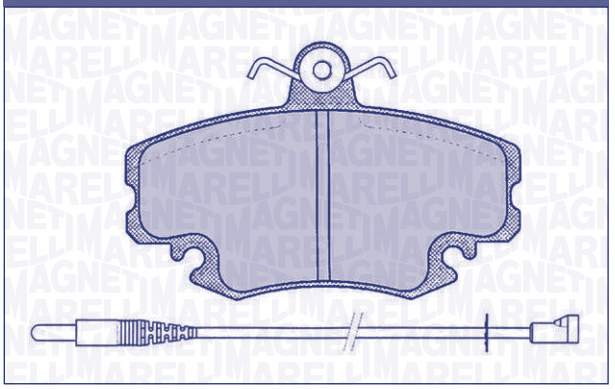

F/R	WVA	W×H×Th (mm)	SiS	Nr. Pz	W.i.	i	Extra kit [Opt]
F	21463	99,9×64,8×18	LG	4x	2x	w.i. L=215mm	OK030

DACIA	
Logan (LSO)	04 →
Logan SW	02/07 →
Sandero	06/08 →

RENAULT	
R 21 (B/L48.)	06/88 →
R 21 Nevada (K48)	03/86 →
Clio	92 →
Clio II	98 →
Clio III	01 →
Clio Storia	06 →
Express Van	92 →
Megane	08/95 →
Megane Classic	96 →
Megane Cabrio	08/95 →
Megane Coach	08/95 →
Megane Scenic (-ABS)	96 →
Rapid Van	92 →
Symbol	98 →
Thalia II	08/00 →
Twingo I/Twingo II	99 →

PF0204

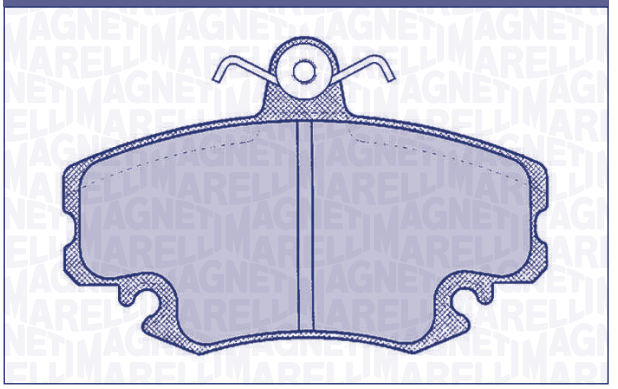

F/R	WVA	W×H×Th (mm)	SiS	Nr. Pz	W.i.	i	Extra kit [Opt]
F	21404 21463	99,9×64,8×18	LG	4x	[-]	–	OK030

RENAULT	
Megane (+ABS)	03/99 →
Megane Classic (LA)	03/99 →
Megane Cabrio (EA)	03/99 →
Megane Coach (DA)	03/99 →
Megane Van (SA)	03/99 →
Twingo I	00 →
Twingo III	06/07 →

PF0205

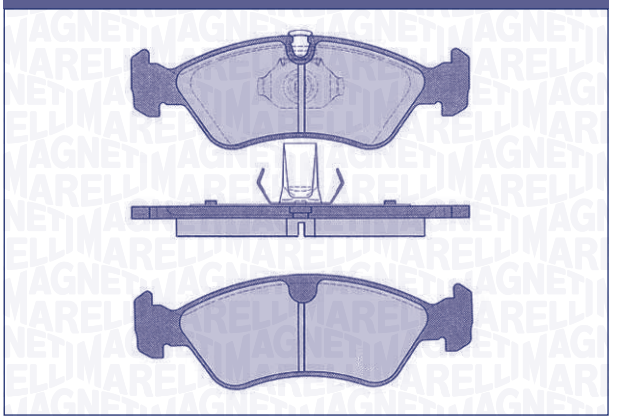

F/R	WVA	W×H×Th (mm)	SiS	Nr. Pz	W.i.	i	Extra kit [Opt]
F	21862	156,4×52,8×17	ATE	2x 2x	[-]	–	

OPEL	
Astra F	94 →
Calibra 4WD	95 →
Vectra A	88 →
Vectra B	95 →

PF0206

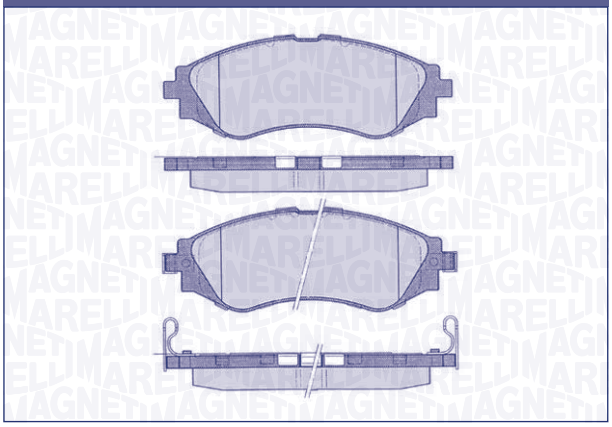

F/R	WVA	W×H×Th (mm)	SiS	Nr. Pz	W.i.	i	Extra kit [Opt]
F	24062 24063 24064	143×51,5×17	ST	2x 1x 1x	2x	4 antirumore in confezione / 4 antinoise in the box	

CHEVROLET (DAEWOO)	
Evanda (KLA)	03/05 →
Epica	06 →
DAEWOO	
Evanda (KLA)	08/02 →
Leganza (KLA)	97 →
Nexia	03 →

PF0207

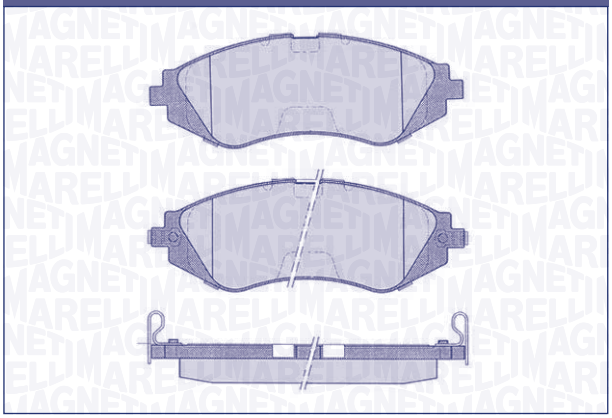

F/R	WVA	W×H×Th (mm)	SiS	Nr. Pz	W.i.	i	Extra kit [Opt]
F	23234 23235 23236	143×51×17	ST	2x 1x 1x	2x	4 antirumore in confezione / 4 antinoise in the box	

CHEVROLET (DAEWOO)	
Lacetti (KLA.)	01/05 →
Nubira (KL.)	03/05 →
Rezzo	03/05 →
Tacuma (KLAU)	01/05 →

PF0207

DAEWOO	
Espero	93 →
Lacetti (KLA.)	02/04 →
Nubira (KL.)	97 →
Rezzo	00 →
Tacuma (KLAU)	01 →

PF0208

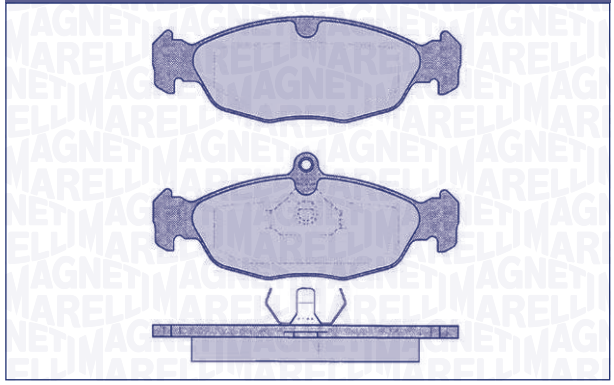

F/R	WVA	W×H×Th (mm)	SiS	Nr. Pz	W.i.	i	Extra kit [Opt]
F	20547 21353	140,1×48,4×16,5 141,4×58,2×16,5	ATE	2x 2x	[-]	–	

DAEWOO	
Aranos	95 →
Lanos	97 →
Nexia	95 →
OPEL	
Astra F/Van	91 →
Corsa A	91 →
Corsa B/Van	93 →
Combo II	07/94 →
Tigra	95 →
Vectra A	08/91 →
JAGUAR	
XJ6 Sovereign	11/94 →
XJR Super Charged	11/94 →
XJS V12	93 →
XJS Coupé	05/93 →
XJSC Convertible	05/93 →

PF0209

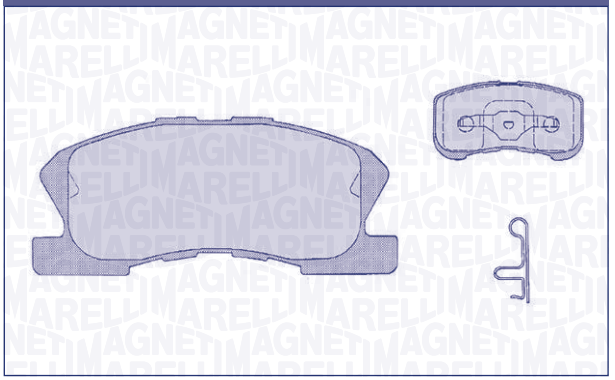

F/R	WVA	W×H×Th (mm)	SiS	Nr. Pz	W.i.	i	Extra kit [Opt]
F	23497 23498	115,5×49,6×15,3 95×49,6×15,3	AK	2x 2x	2x	2 segnalatori acustici / 2 acoustic sensors / antirumore in confezione / antinoise in the box	

DAIHATSU	
Move (L6/L9)	10/96 →
Sirion (M1)	98 →
Storia	04/05 →
YRV	00 →
PERODUA	
Kenari (L9_)	10/00 →

PF0210

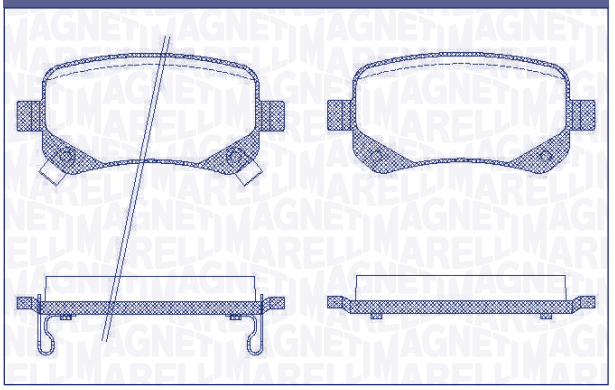

F/R	WVA	W×H×Th (mm)	SiS	Nr. Pz	W.i.	i	Extra kit [Opt]
R	24822 24823 24824	116,7×52,6×17	LG	2x 1x 1x	2x	–	

CHRYSLER	
G. Voyager IV	10/07 →
Voyager IV	10/07 →
DODGE	
Journey	06/08 →

PF0210

FIAT	
Freemont	11 →
JEEP	
Cherokee V (KK)	05/08 →
WRANGLER II (TJ)	02/06 →
WRANGLER III (JK)	04/07 →
LANCIA	
Voyager	09/11 →
VOLKSWAGEN	
Routan (USA)	01/09 →

PF0211

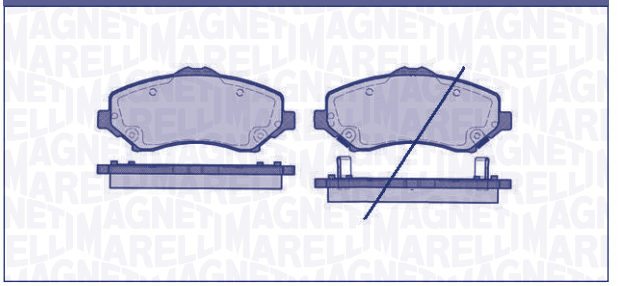

F/R	WVA	W×H×Th (mm)	SiS	Nr. Pz	W.i.	i	Extra kit [Opt]
F	24604 24605 24821	146×64×18	SUM	2x 1x 1x	2x	–	

CHRYSLER	
G. Voyager IV	10/07 →
Voyager IV	10/07 →
DODGE	
Journey	06/08 →
Nitro	06/07 →
FIAT	
Freemont	11 →
JEEP	
Cherokee V (KK)	05/08 →
WRANGLER II (TJ)	02/06 →
LANCIA	
Voyager	09/11 →
VOLKSWAGEN	
Routan (USA)	01/09 →

PF0212

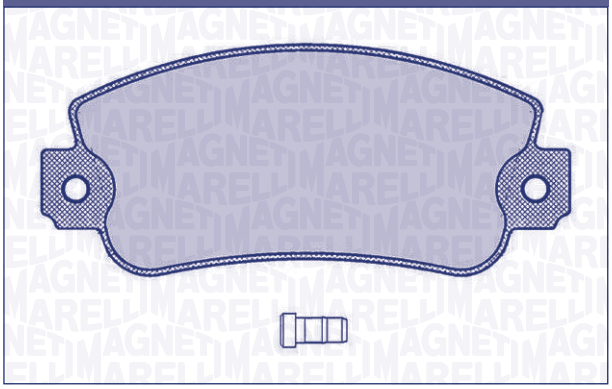

F/R	WVA	W×H×Th (mm)	SiS	Nr. Pz	W.i.	i	Extra kit [Opt]
F	20775 20950 20951 20952	108,8×47,4×18	BD	4x	2x	w.i. plugs	OK028

AUTOBIANCHI	
Y 10 Fire	85 →
FIAT	
131 Mirafiori	82 →
900	82 →
Panda (141)	82 →
Panda 4x4 (141)	82 →
Regata (138)	83 →
Ritmo	82 →
Uno	83 →
Uno (146)	83 →
INNOCENTI	
Mille	96 →
SEAT	
Fura	82 →
Ibiza	84 →
Malaga	84 →
Marbella	87 →
Ronda	83 →
Terra	03/87 →

PF0214

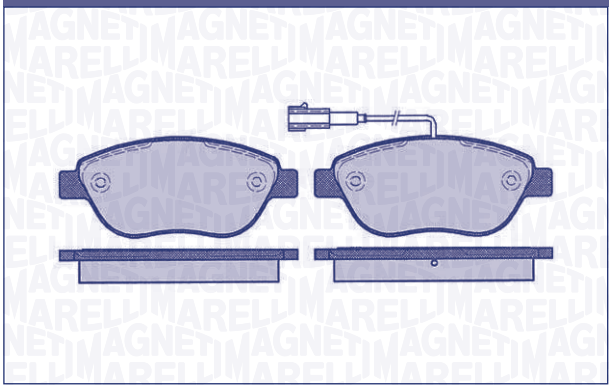

F/R	WVA	W×H×Th (mm)	SiS	Nr. Pz	W.i.	i	Extra kit [Opt]
F	23708 23709 23710	137×57,3×19	BSC	3x 1x	1x	w.i. L=210mm	OK033

ABARTH	
500 Abarth (169)	08 →
500 cabrio (169)	09 →
FIAT	
Bravo II	07 →
Bravo II Van	08 →
Doblò II	11/05 →
Doblò III (152)	02/10 →
Doblò Cargo III (263)	02/10 →
Doblò Cargo Piatto III (263)	02/10 →
Linea	07 →
Multipla I (186)	98 →
Multipla II	07/04 →
Punto IV (Grande Punto)	05 →
Stilo (192)	01 →
LANCIA	
Delta II	07/08 →
Musa	07/08 →
OPEL	
Combo (X12)	02/12 →
Combo Furgonato (X12)	02/12 →
VAUXHALL	
Combo (X12)	02/12 →
Combo Furgonato (X12)	02/12 →

PF0215

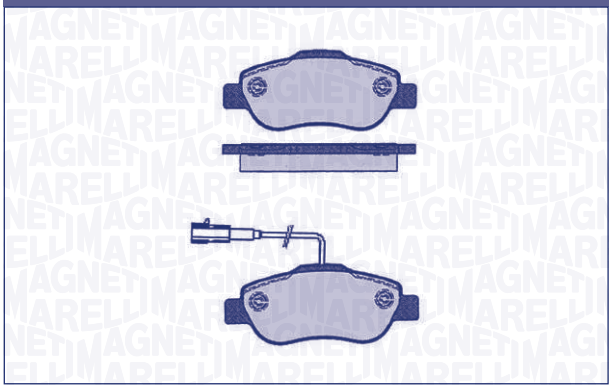

F/R	WVA	W×H×Th (mm)	SiS	Nr. Pz	W.i.	i	Extra kit [Opt]
F	24072	122,9×51,7×17,5	BSC	3x 1x	1x	w.i. L=195mm	OK012/ OK040

FIAT	
500 1.3 Mjt 16V	07→
500 C (169)	09→
FORD	
Ka II 1.3 TDci	09→

PF0216

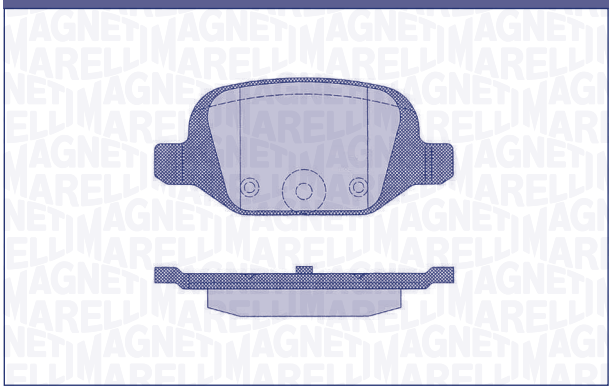

F/R	WVA	W×H×Th (mm)	SiS	Nr. Pz	W.i.	i	Extra kit [Opt]
R	23601 23661	95,8×43,9×13,7	LG	4x	[-]	–	OK039

ABARTH	
500 Abarth (169)	08→
500C Abarth (169)	09→
FIAT	
500	07→
Doblò (223)	00→
Doblò Cargo (223)	00→
Panda II 4x4 (169)	04→
Panda II 100hp	10/06→
Punto HGt (188)	99→
Punto III (188)	07/03→

PF0218

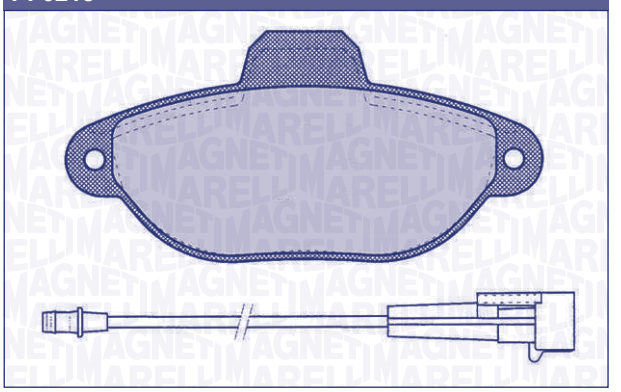

F/R	WVA	W×H×Th (mm)	SiS	Nr. Pz	W.i.	i	Extra kit [Opt]
F	21436 21437	115×55,6×17	BD	4x	1x	w.i. L=475mm/ +shim	OK029/ OK094

FIAT	
Punto 55 (176)	93→
Punto 60 (176)	93→
Punto 75 (176)	93→
Punto III (188)	07/03→
LANCIA	
Y (840)	95→

PF0219

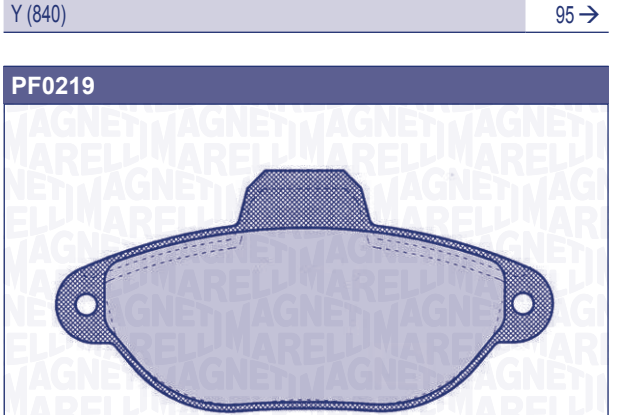

F/R	WVA	W×H×Th (mm)	SiS	Nr. Pz	W.i.	i	Extra kit [Opt]
F	21436	115×55,6×17	BD	4x	[o]	+shim	OK029/ OK094

FIAT	
Panda II (169)	10/03→
Panda II Bi-Power (169)	07→
Panda II Van	06→
Punto II (188)	99→
Punto III BiPower (188)	07/03→
Seicento (187)	98→
Seicento Van (187)	98→

PF0221

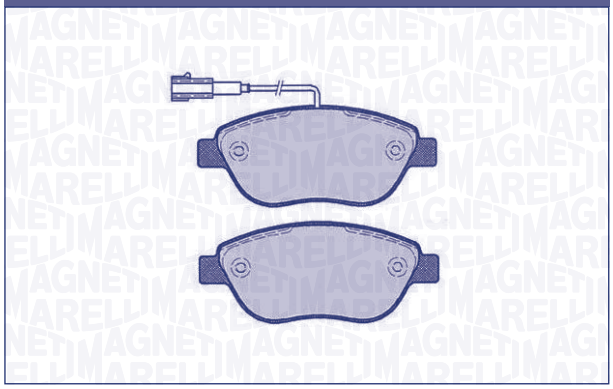

F/R	WVA	W×H×Th (mm)	SiS	Nr. Pz	W.i.	i	Extra kit [Opt]
F	23708 23710	137×57,3×19	BSC	2x 2x	2x	w.i. L=210mm	OK033/ OK040

FIAT	
G. Punto Evo	10/09→

PF0222

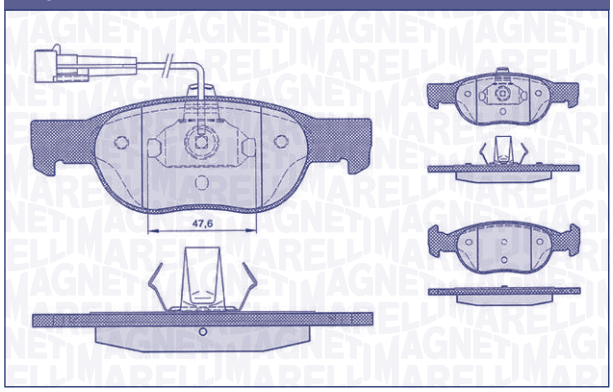

F/R	WVA	W×H×Th (mm)	SiS	Nr. Pz	W.i.	i	Extra kit [Opt]
F	21930 21931 21932	151,4×52×18	ATE	2x 1x 1x	1x	w.i. L=200mm	

FIAT	
Brava/Bravo	95→
Marea (185)	96→
Punto Cabrio 90 (176C)	04/94→
LANCIA	
Delta	06/93→

PF0223

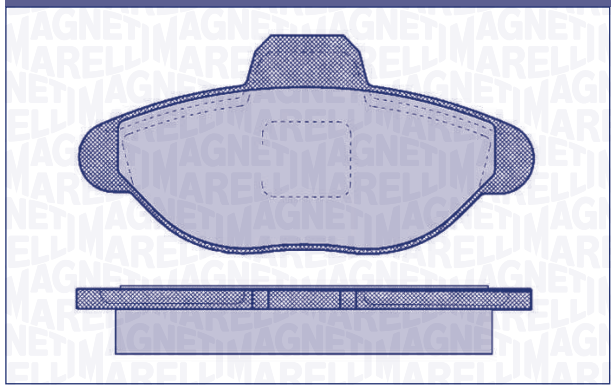

F/R	WVA	W×H×Th (mm)	SiS	Nr. Pz	W.i.	i	Extra kit [Opt]
F	21365	115×55,4×17	BD	4x	[-]	–	

FIAT	
Cinquecento (170)	92→

PF0224

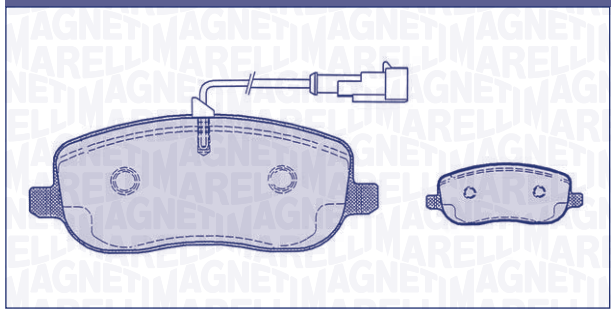

F/R	WVA	W×H×Th (mm)	SiS	Nr. Pz	W.i.	i	Extra kit [Opt]
F	20261	146,7×60×19	LG	3x 1x	1x	w.i. L=180mm	OK030

FIAT	
Croma II (194)	07/05→

PF0225

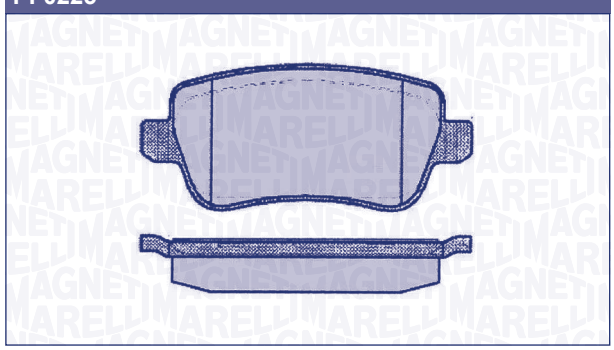

F/R	WVA	W×H×Th (mm)	SiS	Nr. Pz	W.i.	i	Extra kit [Opt]
R	24348	105,5×46,6×16,8	LG	4x	[-]	–	OK039/ OK046/ OK045

FIAT	
Croma II (194)	07/05→

PF0226

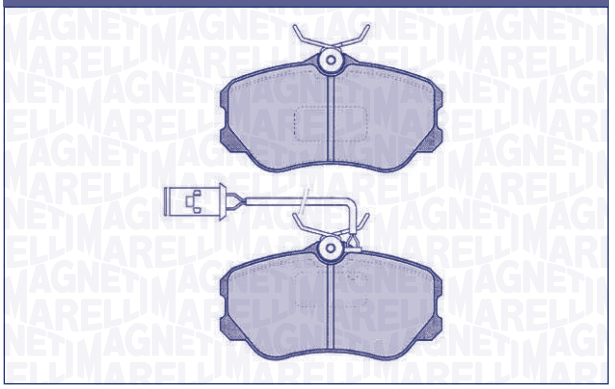

F/R	WVA	W×H×Th (mm)	SiS	Nr. Pz	W.i.	i	Extra kit [Opt]
F	21182 21183	110×58,5×19	LG	2x 2x	2x	–	OK030

ALFA ROMEO	
164 Twin Spark	89 →

PF0227

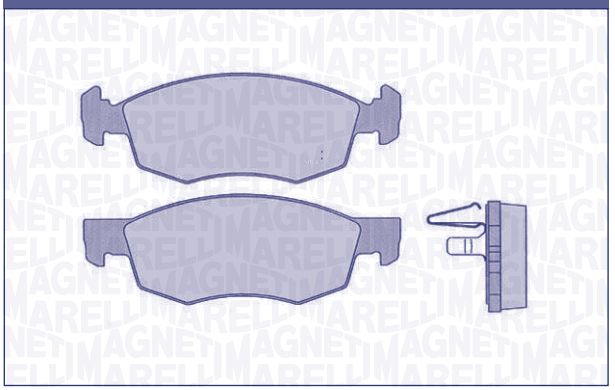

F/R	WVA	W×H×Th (mm)	SiS	Nr. Pz	W.i.	i	Extra kit [Opt]
F	23552 23842	150,3×52,5×18	ATE	2x 2x	[-]	–	

FIAT	
Doblò (223)	00 →

PF0228

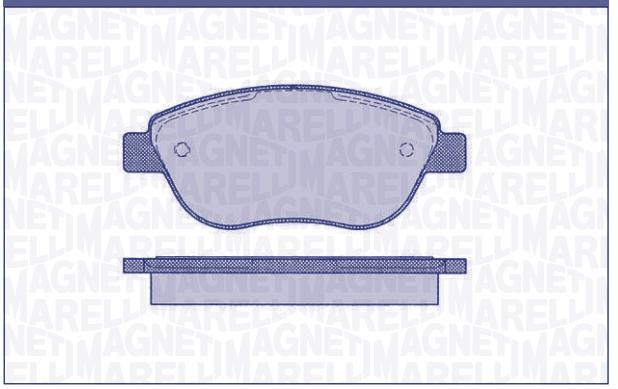

F/R	WVA	W×H×Th (mm)	SiS	Nr. Pz	W.i.	i	Extra kit [Opt]
F	23708 23710	137×57,3×19	BSC	4x	[-]	–	OK033/ OK038

PEUGEOT	
Bipper (AA)	02/08 →
FIAT	
Doblò II	11/05 →
Doblò II Cargo	11/05 →
Idea (135)	03 →
LANCIA	
Musa	04 →

PF0229

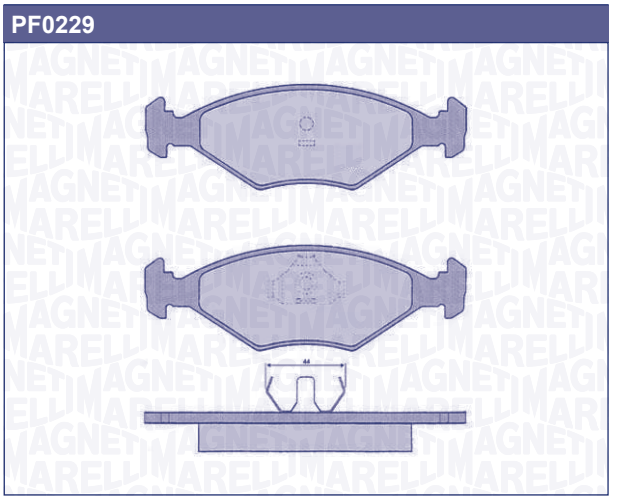

F/R	WVA	W×H×Th (mm)	SiS	Nr. Pz	W.i.	i	Extra kit [Opt]
F	21962	151,5×49×17,8	ATE	2x 2x	[-]	–	

FIAT	
Fiorino I	93 →
Fiorino I Pick-up	97 →

PF0230

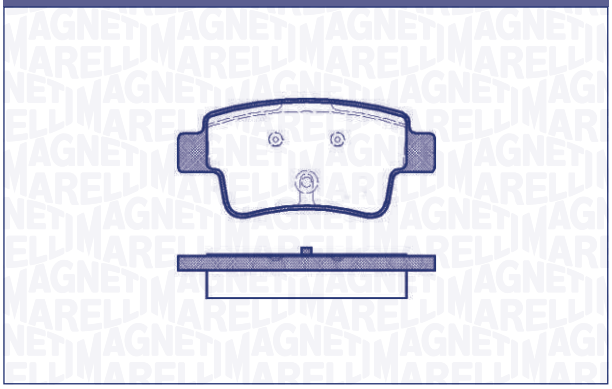

F/R	WVA	W×H×Th (mm)	SiS	Nr. Pz	W.i.	i	Extra kit [Opt]
R	24349	102×47,1×17,2	BSC	4x	[-]	–	OK033/ OK040

ABARTH	
Punto IV ABARTH (199)	07 →
FIAT	
Punto IV ABARTH (199)	07 →
Punto IV (199 Grande Punto)	09/05 →
OPEL	
Corsa D	02/07 →

PF0232

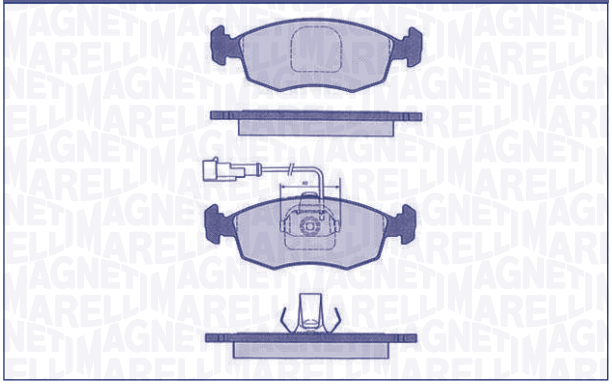

F/R	WVA	W×H×Th (mm)	SiS	Nr. Pz	W.i.	i	Extra kit [Opt]
F	20908	151,4×52,5×18	ATE	2x 2x	2x	w.i. L=180mm	

FIAT	
Palio	98 →

PF0233

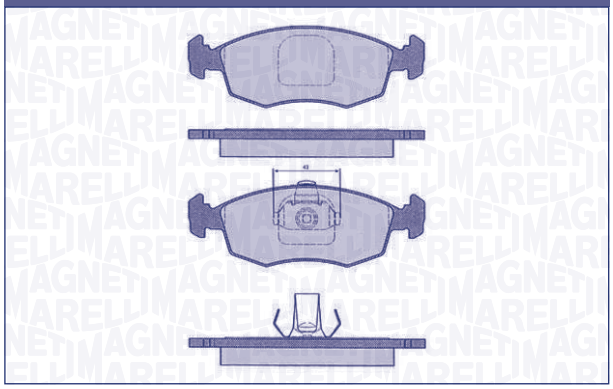

F/R	WVA	W×H×Th (mm)	SiS	Nr. Pz	W.i.	i	Extra kit [Opt]
F	20907 23552	151,4×52,5×18	ATE	2x 2x	[-]	–	

FIAT	
Palio D	01 →
Palio jTD	02 →
Punto II HGt (188)	99 →
Strada (178E)	99 →

PF0234

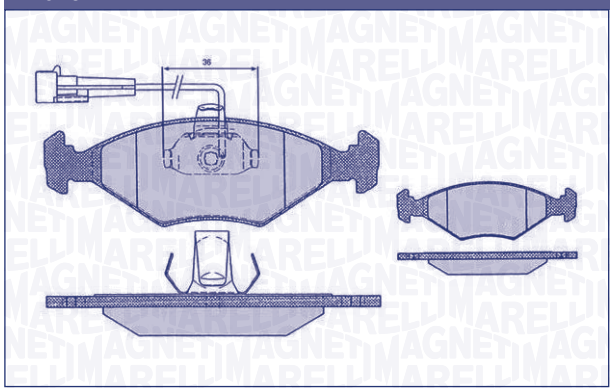

F/R	WVA	W×H×Th (mm)	SiS	Nr. Pz	W.i.	i	Extra kit [Opt]
F	23218 23220	151,5×49×17,8	ATE	2x 2x	2x	w.i. L=170mm	

FIAT	
Palio	97 →
Palio SW	97 →
Siena	97 →

PF0235

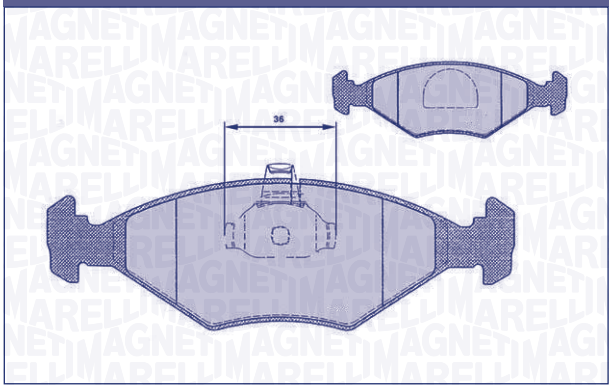

F/R	WVA	W×H×Th (mm)	SiS	Nr. Pz	W.i.	i	Extra kit [Opt]
F	23218 23219	151,5×49×17,8	ATE	2x 2x	[-]	–	

FIAT	
Palio DS	→ 03/98
Siena	04/96 →
Strada (178E)	→ 03/98

PF0236

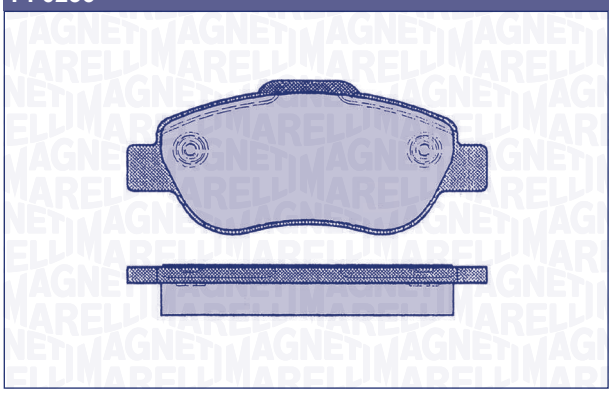

F/R	WVA	W×H×Th (mm)	SiS	Nr. Pz	W.i.	i	Extra kit [Opt]
F	24072 -	122,9×51,7×17,5	BSC	4x	[-]	–	OK012/ OK040

FIAT	
Panda II Bi-Power/Natural Power	09/07 →
Panda II (169)	06/04 →
Panda II 4x4 (169)	04 →
Panda II Cross 4x4	02/06 →
Panda II Van	06 →

PF0237

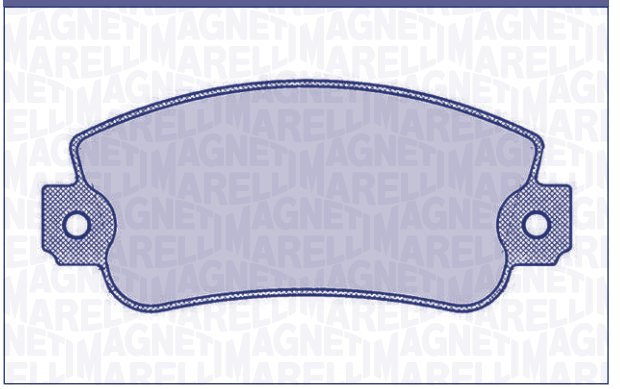

F/R	WVA	W×H×Th (mm)	SiS	Nr. Pz	W.i.	i	Extra kit [Opt]
F	20775 20950	108,8×47,4×18	BD	4x	[o]	–	OK028

FIAT	
Panda (141)	82 →

PF0238

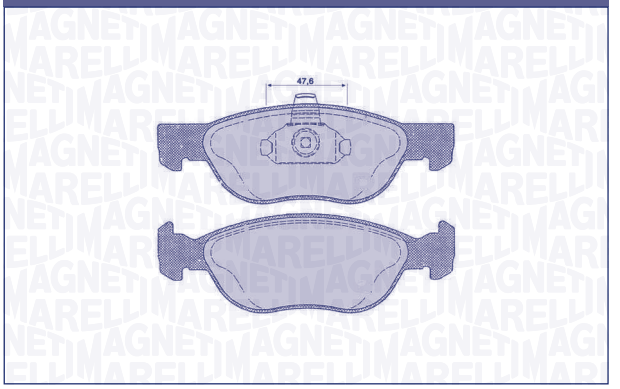

F/R	WVA	W×H×Th (mm)	SiS	Nr. Pz	W.i.	i	Extra kit [Opt]
F	21927 21928	156,4×52,5×17,8	ATE	2x 2x	[-]	–	

FIAT	
Punto II (188)	99 →
Punto III (188)	07/03 →
Punto Furgonato (188)	02/00 →

PF0239

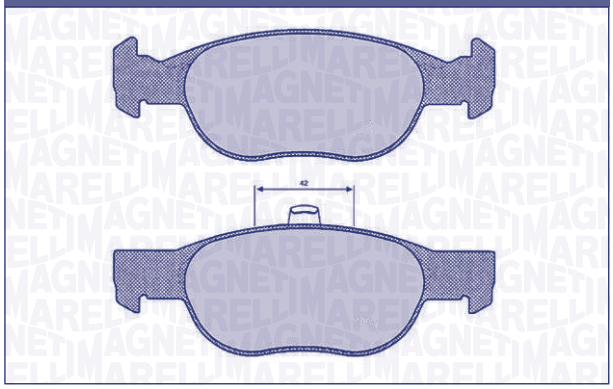

F/R	WVA	W×H×Th (mm)	SiS	Nr. Pz	W.i.	i	Extra kit [Opt]
F	21930 23181	151,4×52×18	ATE	2x 2x	[-]	–	

FIAT	
Punto (176)	94 →
Punto Cabrio (176C)	04/97 →
Punto II (188)	99 →
Punto III	07/03 →
LANCIA	
Y (840A) Francia	96 → 03

PF0240

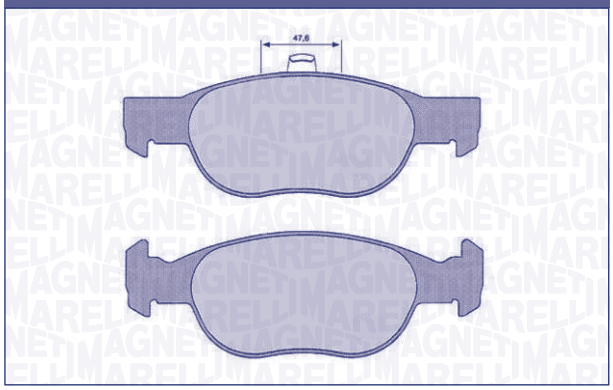

F/R	WVA	W×H×Th (mm)	SiS	Nr. Pz	W.i.	i	Extra kit [Opt]
F	21930 21931	151,4×52×18	ATE	2x 2x	[-]	–	

FIAT	
Punto II (188)	99 →

PF0241

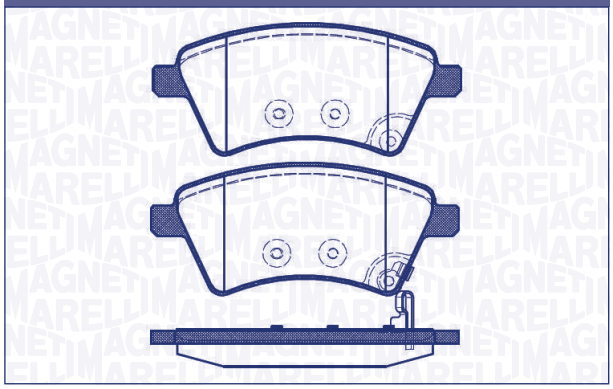

F/R	WVA	W×H×Th (mm)	SiS	Nr. Pz	W.i.	i	Extra kit [Opt]
F	21930 21931	151,4×52×18	ATE	2x 2x	[-]	–	

FIAT	
Sedici	03/06 →
SUZUKI	
SX4 (GY)	05/06 →

PF0242

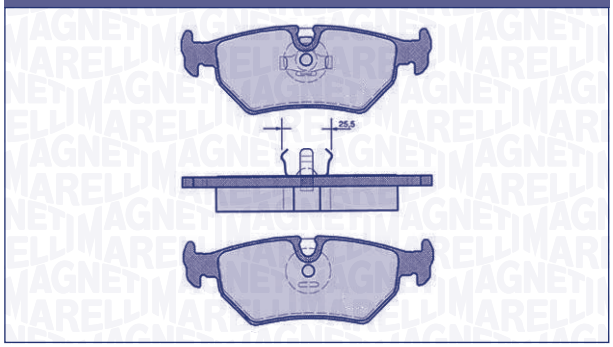

F/R	WVA	W×H×Th (mm)	SiS	Nr. Pz	W.i.	i	Extra kit [Opt]
R	21275 21276	123,1×43,1×17	ATE	2x 2x	[-]	–	

FIAT	
Ulisse (220)	94 →
JAGUAR	
Daimler	89 →
Sovereign	89 →
XJ8	97 →
XJ12	89 →
XJR	94 →
XJS	91 →
XJS V12	93 →
XK8R	96 →
LANCIA	
Z (220)	95 →
PEUGEOT	
806	94 →

PF0243



F/R	WVA	W×H×Th (mm)	SiS	Nr. Pz	W.i.	i	Extra kit [Opt]
R	24137 24136 23482	123,1×52×16,4	ATE	2x 2x	[-]	–	

CITROËN	
C5 III	02/08 →
JAGUAR	
XF	03/08 →
XJ6	10/05 →
XJ8	05/03 →
XK cabriolet	10/07 →
XK8 coupe	08/02 →
XK8 cabriolet	08/02 →
RENAULT	
Laguna IV	10/07 →
Laguna Coupé (DT0)	03/08 →
SAAB	
9-3X	02/09 →

PF0244

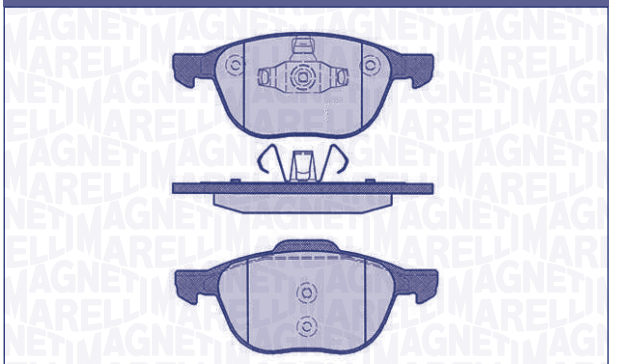

F/R	WVA	W×H×Th (mm)	SiS	Nr. Pz	W.i.	i	Extra kit [Opt]
F	23723 23724	155,2×62,3×18,2 156,2×67×18,2	ATE	2x 2x	[-]	–	

FORD	
C-Max	05/07 →
Focus II-Coupe-CC	11/04 →
Focus III	08 →
Focus C-Max	05 →
Grand C-Max	12/10 →
Kuga	06/08 →
Tourneo Connect	13 →
Tourneo Courier SW	13 →
Transit Connect	14 →
MAZDA	
3/Tre volumi (BL_)	03 →
5	05 →
VOLVO	
C 30	07 →
C 70 II	03/06 →
S 40 II/2 Volumi	01/05 →
V 50 II	01/05 →

PF0245

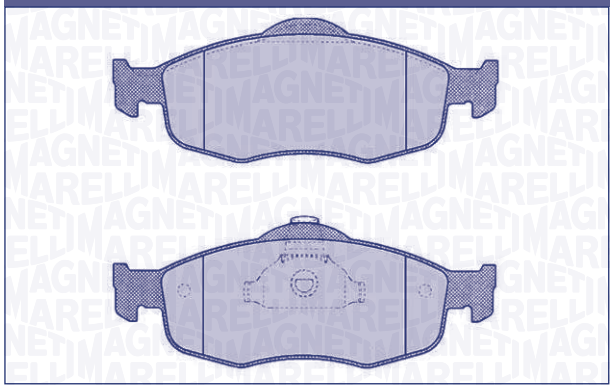

F/R	WVA	W×H×Th (mm)	SiS	Nr. Pz	W.i.	i	Extra kit [Opt]
F	21394 21396	155,2×58,5×18 156,4×58,5×18	ATE	2x 2x	[-]	–	

FORD	
Mondeo	93 →
Scorpio	95 →

PF0246



F/R	WVA	W×H×Th (mm)	SiS	Nr. Pz	W.i.	i	Extra kit [Opt]
F	21171	131×57,5×18	BD	4x	[-]	–	OK030

FORD	
Escort	90 →
Orion	90 →

PF0247

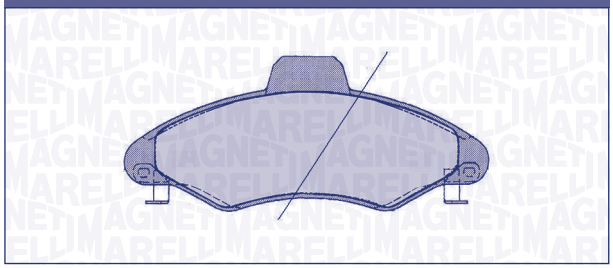

F/R	WVA	W×H×Th (mm)	SiS	Nr. Pz	W.i.	i	Extra kit [Opt]
F	23300 23301	131×57,5×18	BD	2x 2x	[-]	–	

FORD	
Escort	07/97 →

PF0248

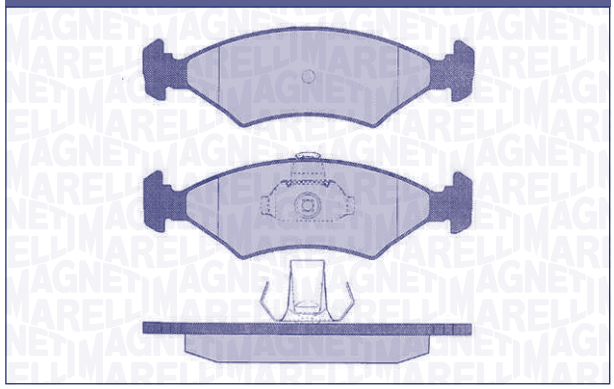

F/R	WVA	W×H×Th (mm)	SiS	Nr. Pz	W.i.	i	Extra kit [Opt]
F	23103 23104	151,3×46,4×18	ATE	2x 2x	[-]	–	

FORD	
Fiesta	95 →
Ka (RB)	96 →
Puma (EC)	98 →
MAZDA	
121 (JA) (JB)	03/96 →

PF0249

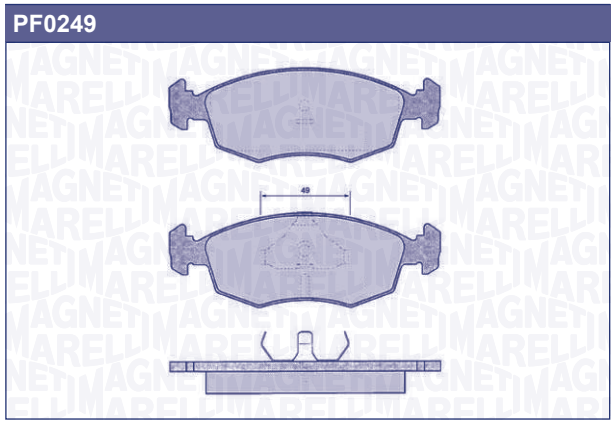

F/R	WVA	W×H×Th (mm)	SiS	Nr. Pz	W.i.	i	Extra kit [Opt]
F	20907 20908	151,4×52,5×18	ATE	2x 2x	[-]	–	

FORD	
Scorpio	85 →

PF0250

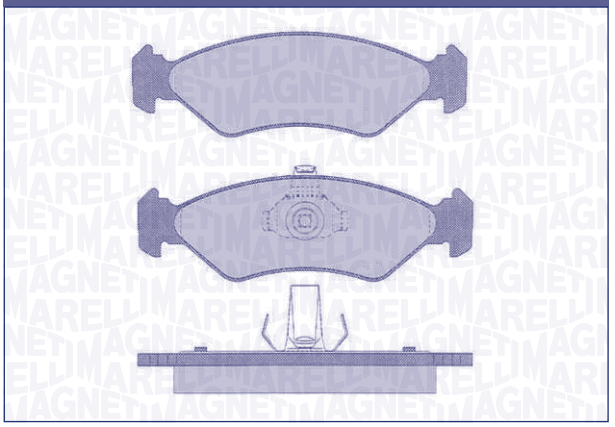

F/R	WVA	W×H×Th (mm)	SiS	Nr. Pz	W.i.	i	Extra kit [Opt]
F	23101 23102	141,4×44,6×17,5	ATE	2x 2x	[-]	–	

FORD	
Fiesta	95 →
Ka (RB)	96 →
MAZDA	
121	96 →

PF0251

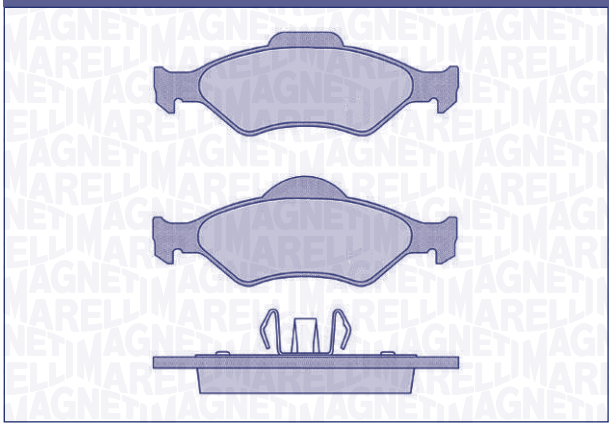

F/R	WVA	W×H×Th (mm)	SiS	Nr. Pz	W.i.	i	Extra kit [Opt]
F	23200 23201	150,3×51×18,6 151,5×54×18,6	ATE	2x 2x	[-]	–	

MAZDA	
121 III (JA_JB)	03/96 →
FORD	
Fiesta V -ABS	02/00 →
Ka (RB)	02/00 →

PF0252

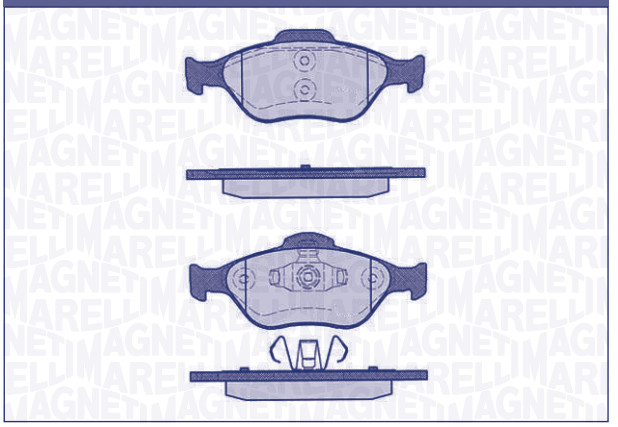

F/R	WVA	W×H×Th (mm)	SiS	Nr. Pz	W.i.	i	Extra kit [Opt]
F	23202 23203 23604	150,3×58×18,6 151,5×61×18,6	ATE	2x 2x	[-]	–	

FORD	
Fiesta V +ABS	02/00 →
Fusion	02 →
Ka (RB)	08/03 →
Puma (EC)	02/00 →
StreetKa	03 →
MAZDA	
121	03/96 →
2	03 →
Demio II	01/03 →

PF0253

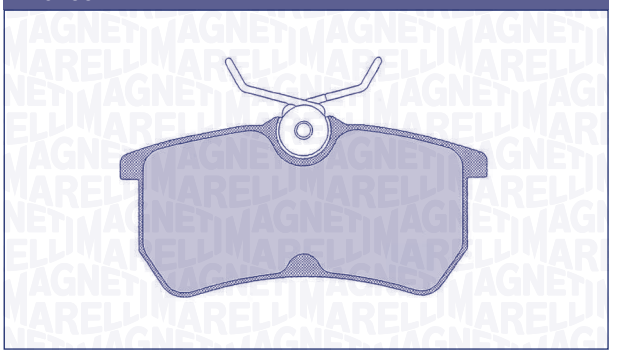

F/R	WVA	W×H×Th (mm)	SiS	Nr. Pz	W.i.	i	Extra kit [Opt]
R	23353	87,2×42,5×14,5	LG	4x	[-]	–	OK030

FORD	
Fiesta ST150	05 →

PF0254

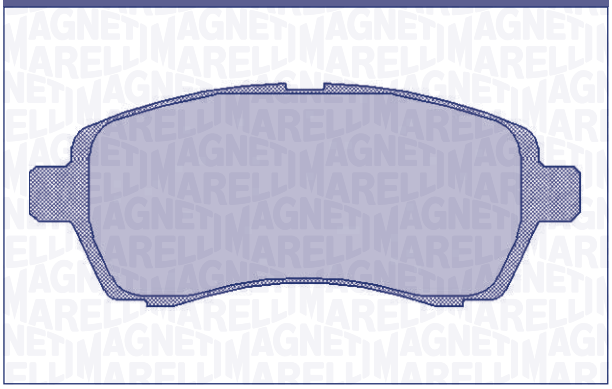

F/R	WVA	W×H×Th (mm)	SiS	Nr. Pz	W.i.	i	Extra kit [Opt]
F	24283	125,7×51.4×16,5	LG	4x	[-]	6 antirumori in confezione/ 6 antinoise in the box	OK033/ OK084

DAIHATSU	
Materia (M4)	10/06 →
Sirion II (M3)	03/08 →
FORD	
Fiesta VI	11/08 →
Fiesta VI My13	09/12 →
MAZDA	
2 II	10/07 →
SUBARU	
Justy IV	01/07 →

PF0255

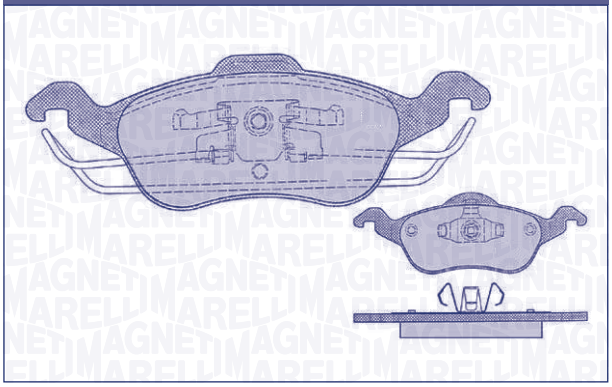

F/R	WVA	W×H×Th (mm)	SiS	Nr. Pz	W.i.	i	Extra kit [Opt]
F	23154 23155	177,8×58,4×18,5 177,8×60,9×18,5	ATE	2x 2x	[-]	–	

FORD	
Focus	99 →

PF0256

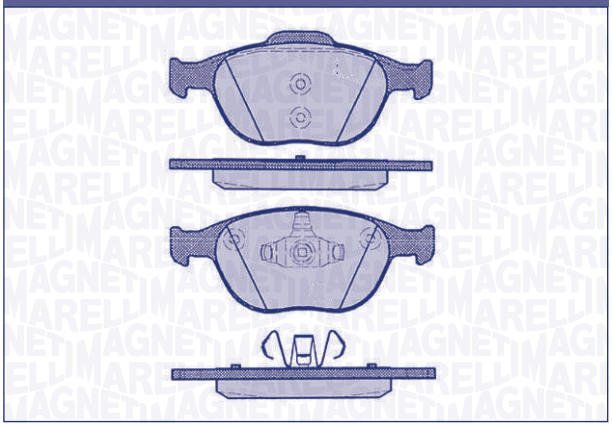

F/R	WVA	W×H×Th (mm)	SiS	Nr. Pz	W.i.	i	Extra kit [Opt]
F	23440 23441	156,3×62×17,6 156,3×67,2×18,1	ATE	2x 2x	[-]	–	

FORD	
Connect	12/02 →
Focus ST170	06/02 →

PF0257

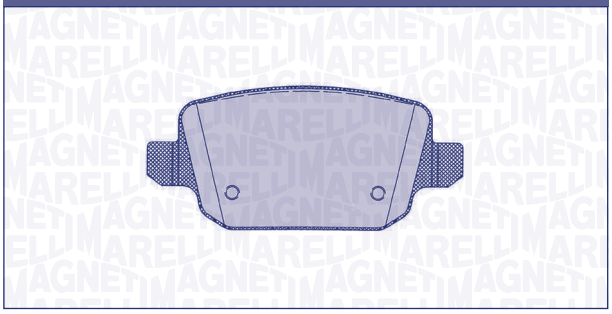

F/R	WVA	W×H×Th (mm)	SiS	Nr. Pz	W.i.	i	Extra kit [Opt]
R	24537	95,2×43,2×15,8	LG	4x	[-]	–	OK030/ OK082

FORD	
Galaxy II -EPB	05/06 →
Mondeo III	06/07 →
Mondeo III SW	06/07 →
S-Max -EPB	06 →
Kuga	06/08 →
LAND ROVER	
Freelander III	10/06 →
VOLVO	
S 80 II (-HB)	03/06 →
V70 III (-HB)	07 →
XC70 II	08/07 →

PF0258

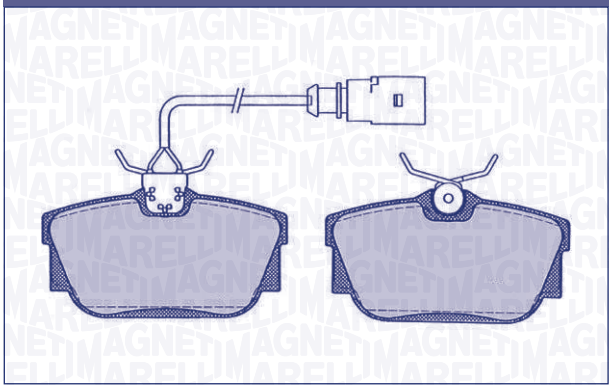

F/R	WVA	W×H×Th (mm)	SiS	Nr. Pz	W.i.	i	Extra kit [Opt]
R	23224 23446	94,9×51×16,8	LG	2x 2x	2x	w.i. L=205mm	OK030

FORD	
Galaxy	00 →
SEAT	
Alhambra	00 →
VOLKSWAGEN	
Sharan	00 →
Sharan II (7M)	07/06 →
Transporter T4	00 →

PF0259

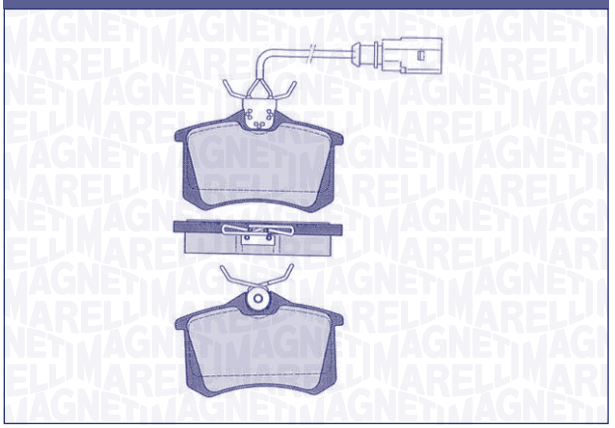

F/R	WVA	W×H×Th (mm)	SiS	Nr. Pz	W.i.	i	Extra kit [Opt]
R	20961 23516	87×53×17	LG	3x 1x	1x	w.i. L=205mm	OK039/ OK041

FORD	
Galaxy	05/00 →
SEAT	
Alhambra	00 →
VOLKSWAGEN	
Sharan	00 →
Sharan II (7M)	07/06 →

PF0260

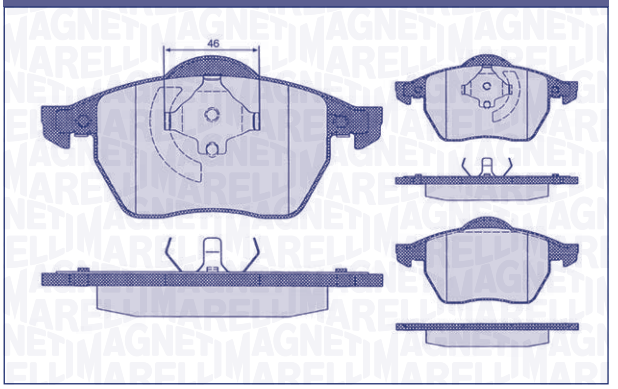

F/R	WVA	W×H×Th (mm)	SiS	Nr. Pz	W.i.	i	Extra kit [Opt]
F	21848 21849	156,4×74,2×19	ATE	2x 1x 1x	[-]	–	

AUDI	
A 3	96 →
TT	99 →
TT Roadster	99 →
FORD	
Galaxy	95 →
SEAT	
Alhambra	00 →
Leon	99 →
Toledo	99 →
VOLKSWAGEN	
Bora	99 →
Golf III VR6	94 →
Golf IV	97 →
Golf IV V6	99 →
New Beetle 2.3i V5 (110kw)	99 →
Passat	93 →
Passat II	96 →
Sharan	97 →
VOLVO	
S 70	97 →
V 70	97 →

PF0261

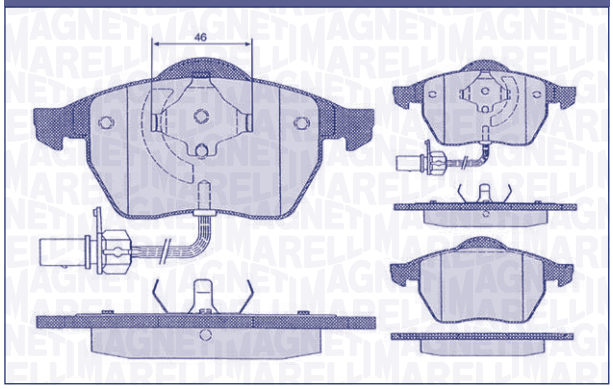

F/R	WVA	W×H×Th (mm)	SiS	Nr. Pz	W.i.	i	Extra kit [Opt]
F	20676	156,4×74,2×19	ATE	2x 1x 1x	2x	w.i. L=200mm	

AUDI	
A 4	97 →
A 6	97 →
A 6 Quattro	97 →
SEAT	
Alhambra	00 →
VOLKSWAGEN	
Bora	00 →
Golf IV	99 →
New Beetle	99 →
Passat II	96 →
Sharan	00 →

PF0262

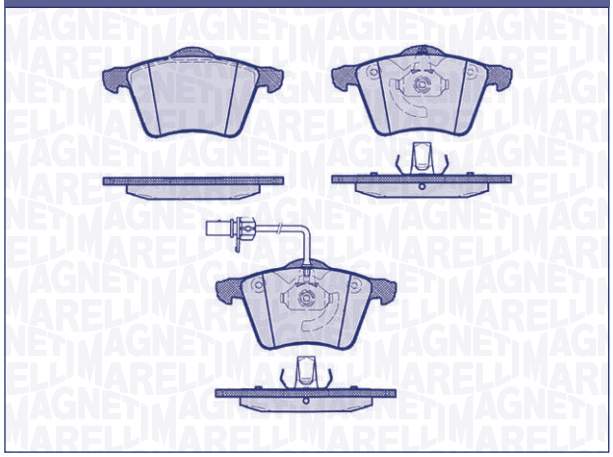

F/R	WVA	W×H×Th (mm)	SiS	Nr. Pz	W.i.	i	Extra kit [Opt]
F	23034 23418 23419	156,4×78,7×19	ATE	2x 1x 1x	1x	w.i. L=260mm	

FORD	
Galaxy	05/00 →
SEAT	
Alhambra T7M2500001 →	05/00 →

PF0262

VOLKSWAGEN	
Sharan T7M20000001 →	05/00 →
Sharan II (7M)	07/06 →

PF0263

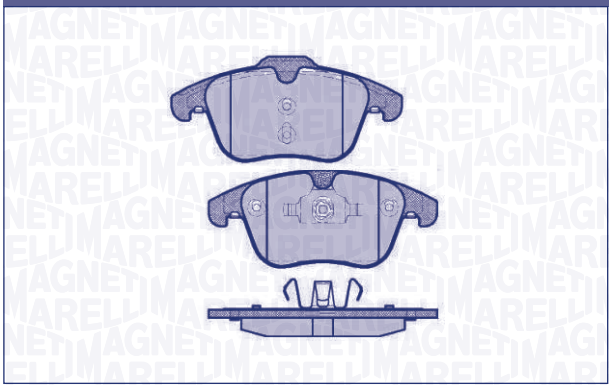

F/R	WVA	W×H×Th (mm)	SiS	Nr. Pz	W.i.	i	Extra kit [Opt]
F	24123 24124	155,2×66,6×19,2 156,4×72×20,2	ATE	2x 2x	[-]	–	

FORD	
Galaxy II	05/06 →
Mondeo III	06/07 →
Mondeo III SW	06/07 →
S-MAX	06 →
LAND ROVER	
Freelander III	10/06 →
Range Rover Evoque	06/11 →
VOLVO	
S 60 II	04/10 →
S 80 II	03/06 →
V 60 III	09/10 →
V 70 III	07 →
XC70 II	08/07 →

PF0264

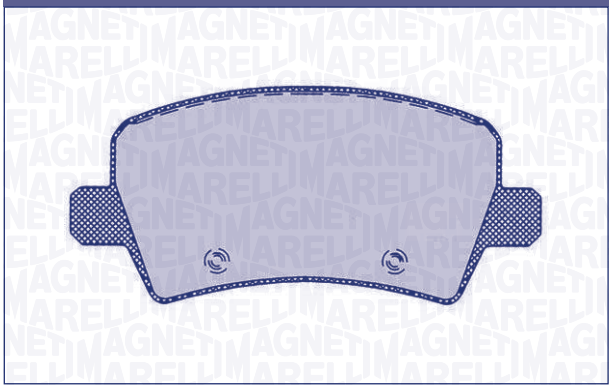

F/R	WVA	W×H×Th (mm)	SiS	Nr. Pz	W.i.	i	Extra kit [Opt]
R	24496	106,3×48,6×16,8	LG	4x	[-]	–	OK030/ OK083

FORD	
S-MAX	06 →
LAND ROVER	
Range Rover Evoque	06/11 →
VOLVO	
S 60 II	04/10 →
S 80 II +EPB	03/06 →
V 60 III	09/10 →
V 70 III +EPB	07 →
XC60	05/08 →
XC70 II	08/07 →

PF0265

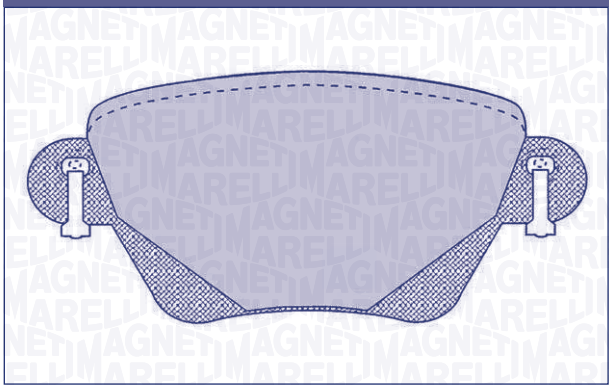

F/R	WVA	W×H×Th (mm)	SiS	Nr. Pz	W.i.	i	Extra kit [Opt]
R	23557	116×50×16,8	BSC	4x	[-]	–	OK012

FORD	
Mondeo II (B5Y)	01 →
JAGUAR	
X-Type (CF1)	06/01 →

PF0266

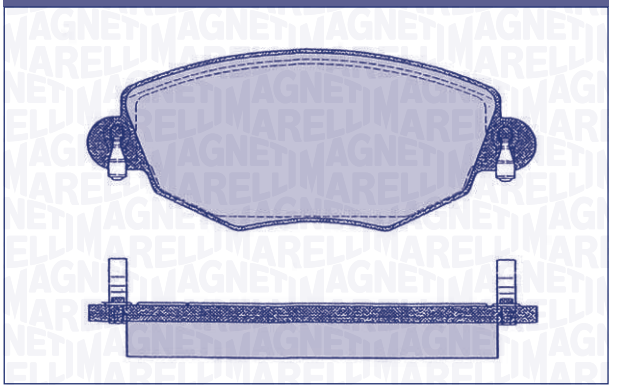

F/R	WVA	W×H×Th (mm)	SiS	Nr. Pz	W.i.	i	Extra kit [Opt]
F	23279	149×60,4×18,5	BSC	4x	[-]	–	OK033

FORD	
Mondeo II (B5Y)	01 →
JAGUAR	
X-Type (CF1)	06/01 →

PF0267

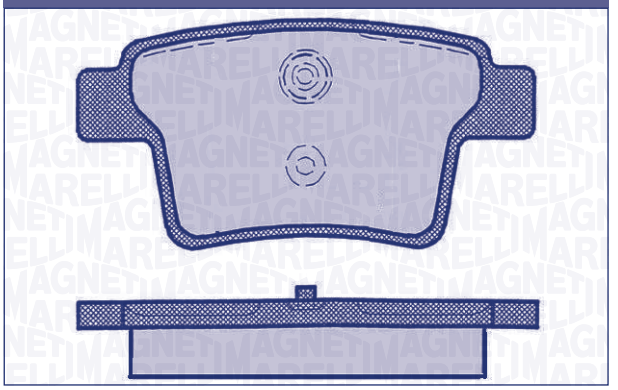

F/R	WVA	W×H×Th (mm)	SiS	Nr. Pz	W.i.	i	Extra kit [Opt]
R	24260	101,9×50,9×16,3	BSC	4x	[-]	–	OK033/ OK040

FORD	
Mondeo II (B5Y)	03 →
JAGUAR	
X-Type (CF1)	10/04 →

PF0268

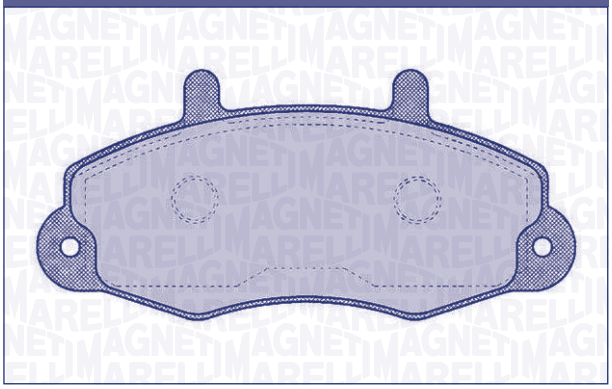

F/R	WVA	W×H×Th (mm)	SiS	Nr. Pz	W.i.	i	Extra kit [Opt]
F	21470	138,8×64×17,9	BD	4x	[-]	kit molle / Kit springs	

FORD	
Transit FT	91 →
Transit-Van (14")	91 →

PF0269

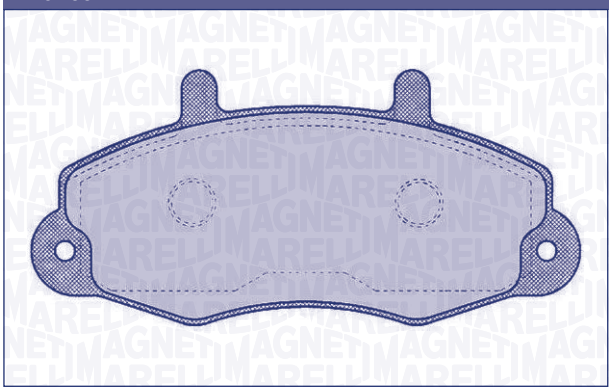

F/R	WVA	W×H×Th (mm)	SiS	Nr. Pz	W.i.	i	Extra kit [Opt]
F	21470	138,8×64×17,9	BD	4x	[-]	–	

FORD	
Transit FT	91 →
Transit-Van (14")	91 →

PF0270

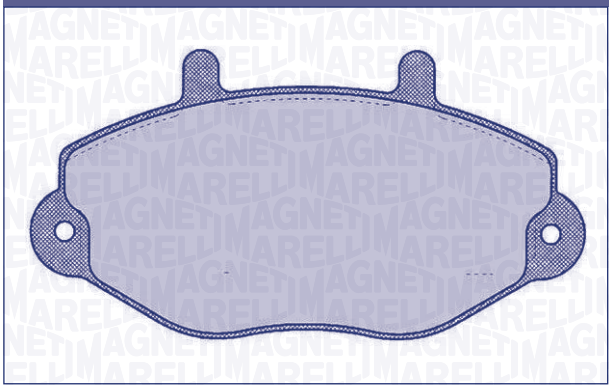

F/R	WVA	W×H×Th (mm)	SiS	Nr. Pz	W.i.	i	Extra kit [Opt]
F	21469	138,8×71,7×18,1	BD	4x	[-]	kit molle / Kit springs	

FORD	
Transit FT	91 →
Transit-Van	91 →

PF0271

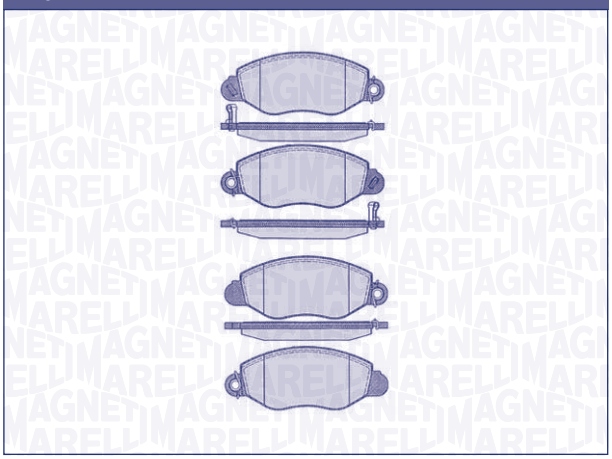

F/R	WVA	W×H×Th (mm)	SiS	Nr. Pz	W.i.	i	Extra kit [Opt]
F	23434 23435 23840 23841	168,5×63,8×18,4	BSC	1x 1x 1x 1x	2x	–	OK012

FORD	
Transit 300 (FWD)	01/00 →

PF0272

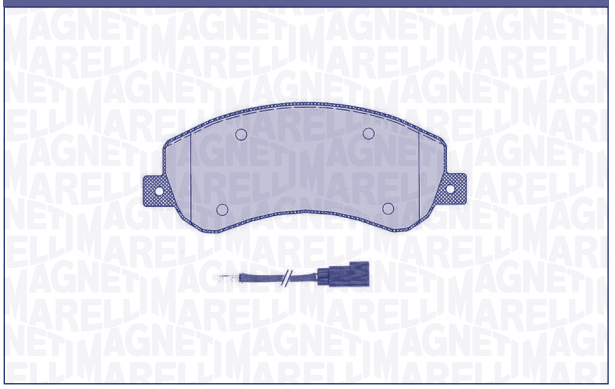

F/R	WVA	W×H×Th (mm)	SiS	Nr. Pz	W.i.	i	Extra kit [Opt]
F	24484	164,9×66,8×18,7	BSC	4x	2x	w.i. L=250mm	OK072/ OK038

FORD	
Transit 330	07/06 →
Transit 350	07/06 →

PF0273

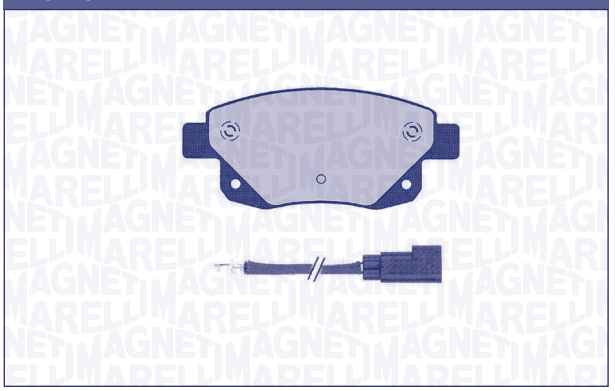

F/R	WVA	W×H×Th (mm)	SiS	Nr. Pz	W.i.	i	Extra kit [Opt]
R	24486	122,9×63,6×17,3	BSC	4x	2x	w.i. L=420mm	OK012/ OK040

FORD	
Transit	07/06 →

PF0274

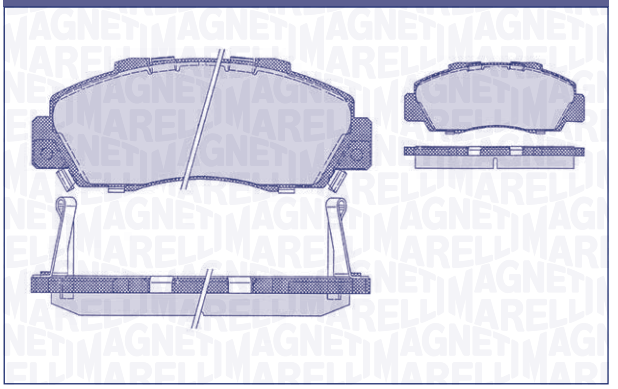

F/R	WVA	W×H×Th (mm)	SiS	Nr. Pz	W.i.	i	Extra kit [Opt]
F	21651 21652 21653	148,7×57,7×17,3	AK	2x 1x 1x	2x	–	

HONDA	
Accord IV	90 →
Accord V	93 →
Accord VI	96 →
Accord VII	99 →
Civic (MC2) Aerodeck	95 →
Civic V	95 →
CRV (RD1)	97 →
HRV	99 →
Integra	02/02 →
Legend II	91 →
Legend III	96 →
NSX (NA1)	90 →
NSX (NA2)	97 →
Odyssey (RA)	95 →
Prelude IV	93 →
Prelude V (BB)	96 →
Shuttle	94 →
ROVER	
618	93 →
620	93 →
623	93 →

PF0275

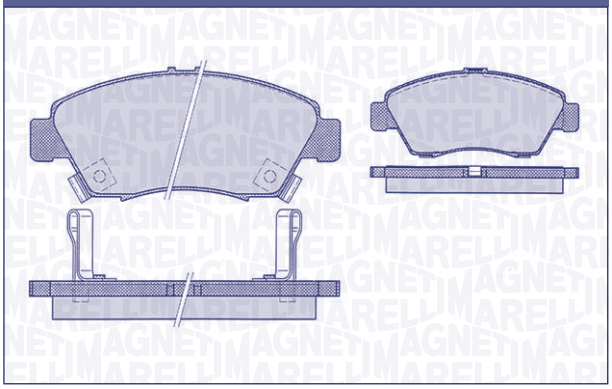

F/R	WVA	W×H×Th (mm)	SiS	Nr. Pz	W.i.	i	Extra kit [Opt]
F	21694 21695 21696	136,5×57,8×17	ST	2x 1x 1x	2x	4 antirumore in confezione / 4 antinoise in the box	

HONDA	
Civic IV	91 →
Civic V	95 →
Civic VII	05/01 →
CRX (EG2)	92 →

PF0276

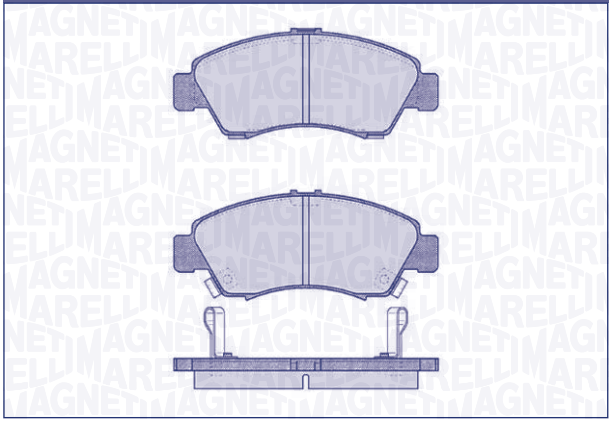

F/R	WVA	W×H×Th (mm)	SiS	Nr. Pz	W.i.	i	Extra kit [Opt]
F	21697 21698 21699	131,5×54,5×15	AK	2x 1x 1x	2x	4 antirumore in confezione / 4 antinoise in the box	

HONDA	
Civic	94 →
Civic IV	91 →
Civic V	95 →
Jazz (GD)	02 →
Logo	99 →

PF0277

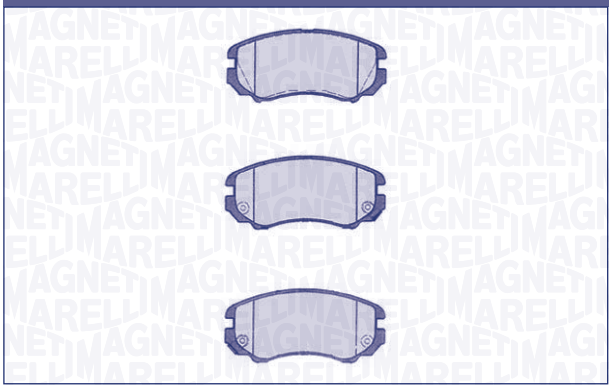

F/R	WVA	W×H×Th (mm)	SiS	Nr. Pz	W.i.	i	Extra kit [Opt]
F	23891 23892 23893	131,3×60,2×17,6	AK	2x 1x 1x	2x	–	

HYUNDAI	
Coupè II (GK)	03/02 →
Galloper (JK)	98 →
Sonata IV	01 →
Sonata V	05 →
Sonica III	01 →
Soul	02/09 →
Tiburon Coupe	10/06 →
Tucson (JM)	04 →

KIA	
Carens III	06 →
Magentis II	11/05 →
Optima II	11/05 →
Sportage III	04 →

PF0278

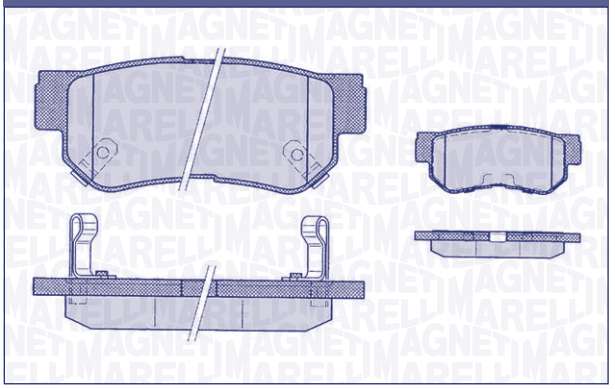

F/R	WVA	W×H×Th (mm)	SiS	Nr. Pz	W.i.	i	Extra kit [Opt]
R	23543 23544 23545	98,4×41×15	MN	2x 1x 1x	2x	–	

HYUNDAI	
Grandeur	04/05 →
Matrix	02 →
Santa Fe	01 →
Sonata III (EF)	98 →
Sonata IV-V	01 →
Sonica II	11/98 →
Trajet	00 →
Tucson	04 →
XG	06/99 →
KIA	
Magentis	05/01 →
Magentis II	11/05 →
Opirus	03 →
Optima	05/01 →
Sportage III	04 →

PF0279

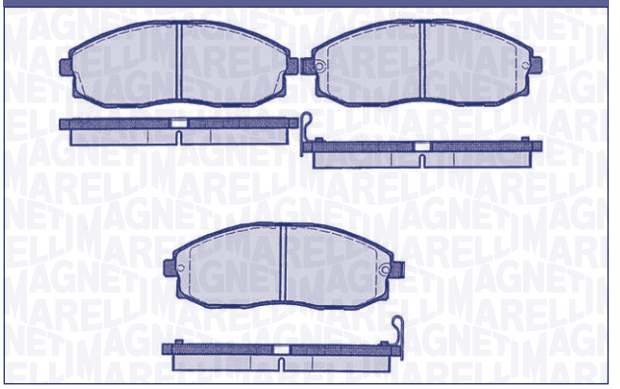

F/R	WVA	W×H×Th (mm)	SiS	Nr. Pz	W.i.	i	Extra kit [Opt]
F	23536 23537 23538	147×53,5×16,5	MN	2x 1x 1x	2x	antirumore in confezione / antinoise in thebox	

HYUNDAI	
H-1	10/97 →
Starex	97 →

PF0280

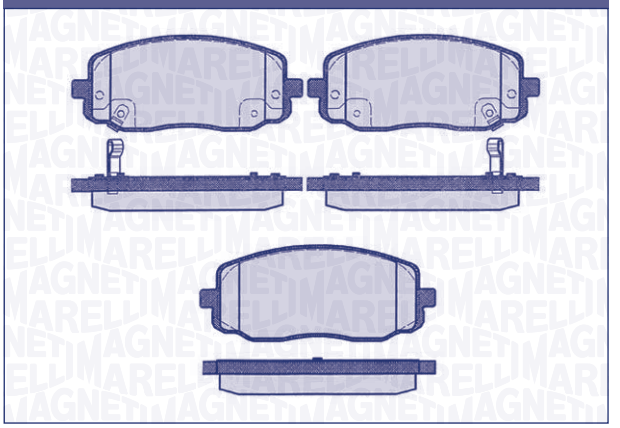

F/R	WVA	W×H×Th (mm)	SiS	Nr. Pz	W.i.	i	Extra kit [Opt]
F	24275 24410 24411	116,2×47,5×16,8	ST	2x 1x 1x	2x	–	OK092

HYUNDAI	
i10	01/08 →
KIA	
Picanto (BA)	07/04 →
Picanto (TA)	05/11 →

PF0281

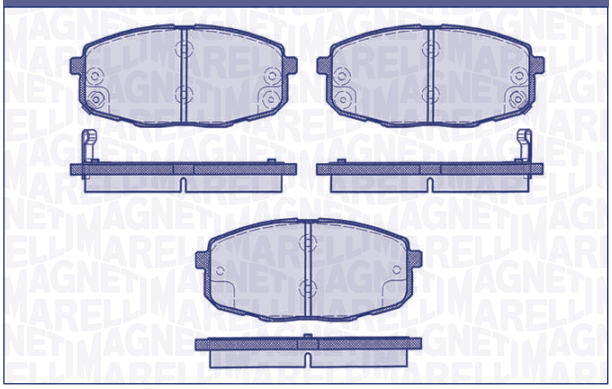

F/R	WVA	W×H×Th (mm)	SiS	Nr. Pz	W.i.	i	Extra kit [Opt]
F	23966 23987 23988	130,1×58,1×16,4	ST	2x 1x 1x	2x	–	

HYUNDAI	
i30	10/07 →
i30 Coupé (GD_)	05/13 →
KIA	
Carens II	07/02 →
Cee'D	07 →
Pro Cee'd	02/08 →

PF0282

MITSUBISHI	
Galloper (JK)	02/99 →
SSANGYONG	
Actyon	11/05 →
Rexton	03/05 →

PF0283

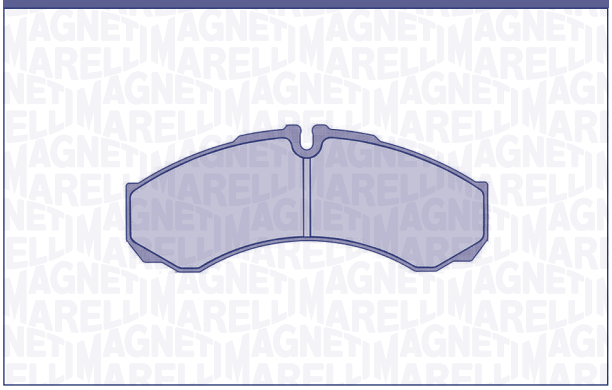

F/R	WVA	W×H×Th (mm)	SiS	Nr. Pz	W.i.	i	Extra kit [Opt]
F/R	29121	164,6×66,5×20	BR	4x	[-]	–	OK031

IVECO - OM	
Daily	96 →

PF0282

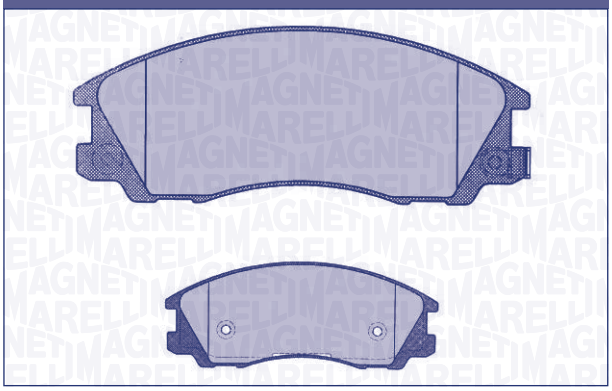

F/R	WVA	W×H×Th (mm)	SiS	Nr. Pz	W.i.	i	Extra kit [Opt]
F	23569 23570 23571	149×58,1×17	AK	2x 1x 1x	2x	–	

HYUNDAI	
Grandeur	02 →
Highway van	03/00 →
H-1	10/97 →
Santa Fe	01 →
Starex	97 →
Trajet	00 →
XG	06/99 →

PF0284

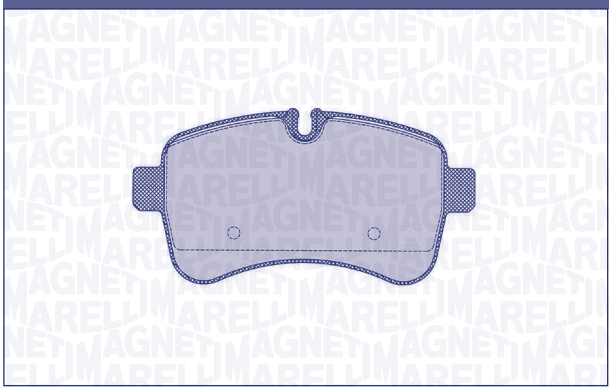

F/R	WVA	W×H×Th (mm)	SiS	Nr. Pz	W.i.	i	Extra kit [Opt]
R	29232	141,1×72,5×20,7	BR	4x	[-]	–	OK049/ OK060

IVECO	
Daily III/IV/V	06 →

PF0285

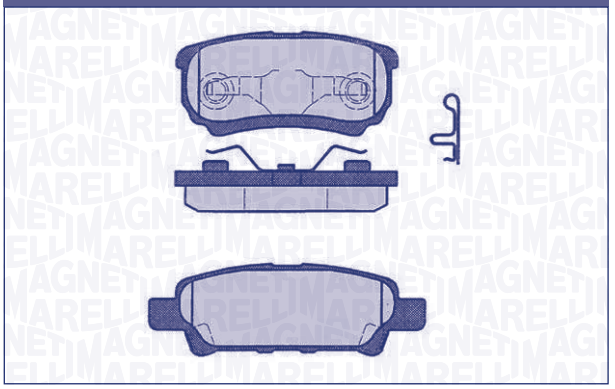

F/R	WVA	W×H×Th (mm)	SiS	Nr. Pz	W.i.	i	Extra kit [Opt]
R	24014 24015	85,5×38,7×15,5 106×35,2×15,5	AK	2x 2x	2x	2 segnalatori acustici / 2 acoustic sensors	

DODGE	
Avenger	06/07 →
Caliber	06/06 →
JEEP	
Compass	06 →
Patriot	01/08 →
MITSUBISHI	
Lancer VII	03 →
Lancer VII SW	03 →
Outlander	05/03 →
PEUGEOT	
4007	02/07 →

PF0286

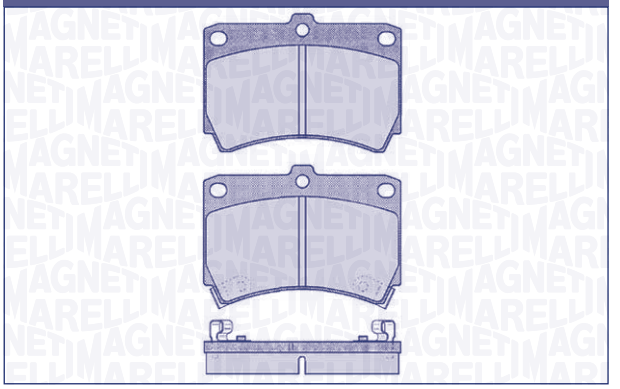

F/R	WVA	W×H×Th (mm)	SiS	Nr. Pz	W.i.	i	Extra kit [Opt]
F	21654 21655 21656	91,6×64×15	ST	2x 1x 1x	2x	–	

KIA	
Rio (DC)	08/00 →
MAZDA	
323/323F/Van	89 →
Astina	91 →
Demio	98 →
Revue	91 →

PF0287

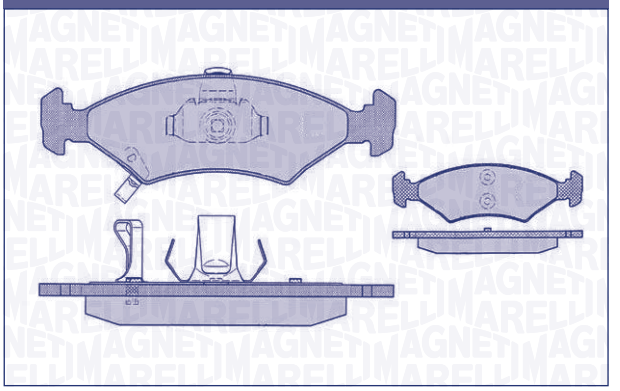

F/R	WVA	W×H×Th (mm)	SiS	Nr. Pz	W.i.	i	Extra kit [Opt]
F	23384 23385 23386	151,4×46,4×17,5	ATE	2x 2x	2x	–	

KIA	
Retona	97 →
Shuma (FB)	97 →
Sephia	95 →
Sportage	97 →

PF0288

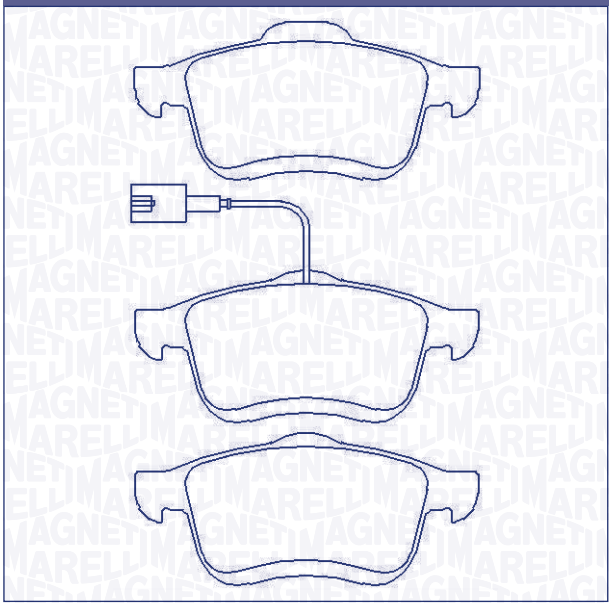

F/R	WVA	W×H×Th (mm)	SiS	Nr. Pz	W.i.	i	Extra kit [Opt]
F	24727 24728 24729	155,2×71,3×20 156,5×69×20	ATE	2x 1x 1x	1x	w.i. L=200mm	

FIAT	
Doblò III (152) Ø305×28	02/10 →
LANCIA	
Delta II	07/08 →
OPEL	
Combo (X12)	02/12 →
Combo Furgonato (X12)	02/12 →
VAUXHALL	
Combo (X12)	02/12 →
Combo Furgonato (X12)	02/12 →

PF0289

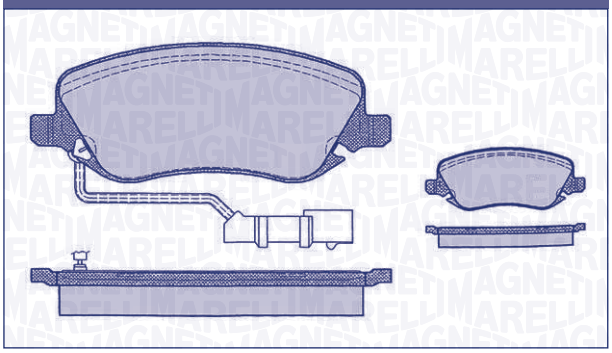

F/R	WVA	W×H×Th (mm)	SiS	Nr. Pz	W.i.	i	Extra kit [Opt]
F	23761	146,6×59,5×18,9	LG	2x 2x	2x	w.i. L=205mm	OK037/ OK017

LANCIA	
Thesis (841)	02 →

PF0290

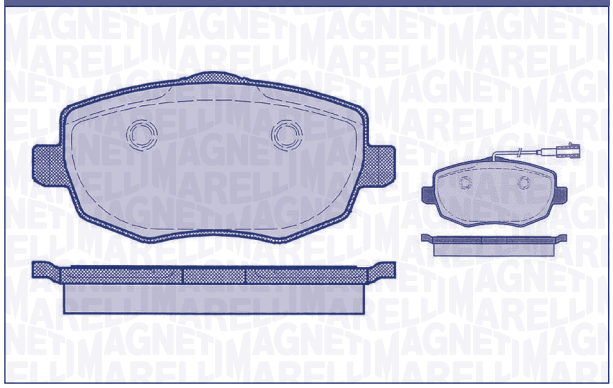

F/R	WVA	W×H×Th (mm)	SiS	Nr. Pz	W.i.	i	Extra kit [Opt]
F	24073	116×56×16,5	LG	3x 1x	1x	w.i. L=175mm	OK039/ OK015/ OK016

LANCIA	
Ypsilon MY06	08/06 →

PF0291

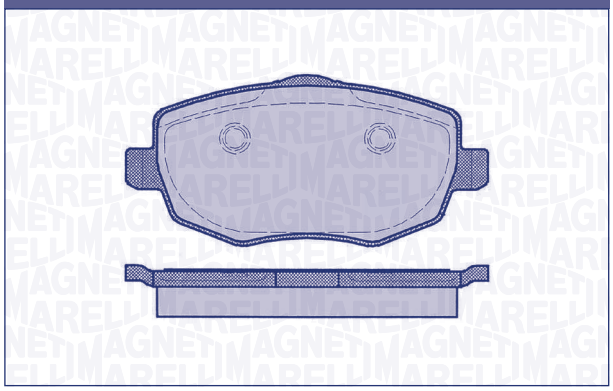

F/R	WVA	W×H×Th (mm)	SiS	Nr. Pz	W.i.	i	Extra kit [Opt]
F	24073	116×56×16,5	LG	4x	[-]	–	OK039/ OK015/ OK016

LANCIA	
Ypsilon (843)	08/03 →

PF0292

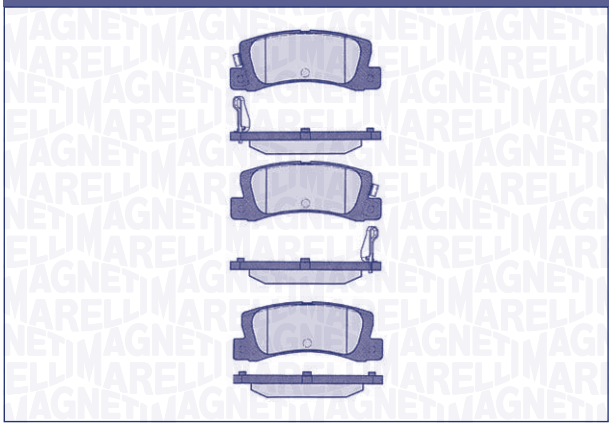

F/R	WVA	W×H×Th (mm)	SiS	Nr. Pz	W.i.	i	Extra kit [Opt]
R	21833 21834	107,8×42,6×15,5	AK	2x 1x 1x	2x	–	

TOYOTA	
Avensis	98 →
Camry III (V2)	96 →
Carina II	88 →
Carina E	92 →
Carina E SW	92 →
Celica (AT18)	89 →

PF0293

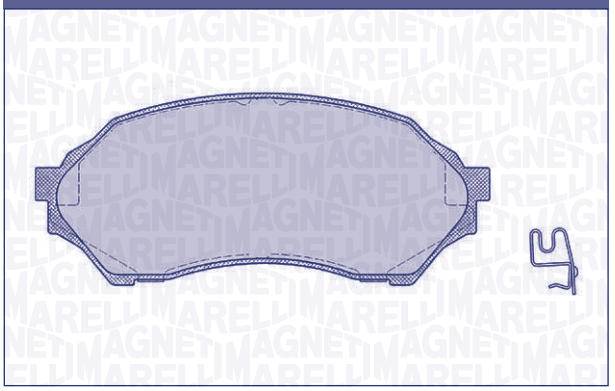

F/R	WVA	W×H×Th (mm)	SiS	Nr. Pz	W.i.	i	Extra kit [Opt]
F	23490	123×51,8×15,5	ST	4x	2x	2 segnalatori acustici / 2 acoustic sensor / 4 antirumore / 4 antinoise	

MAZDA	
323F VI (BJ)	98 →
323P (BJ)	98 →
323S VI (BJ)	98 →

PF0294

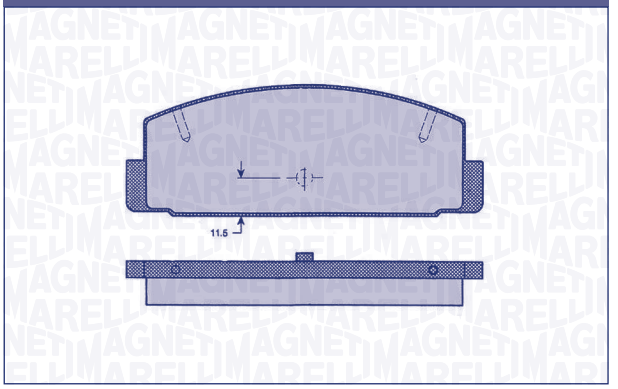

F/R	WVA	W×H×Th (mm)	SiS	Nr. Pz	W.i.	i	Extra kit [Opt]
R	20031 24045	107,8×39,4×13,1	AK	4x	[-]	–	

MAZDA	
6	02 →

PF0295

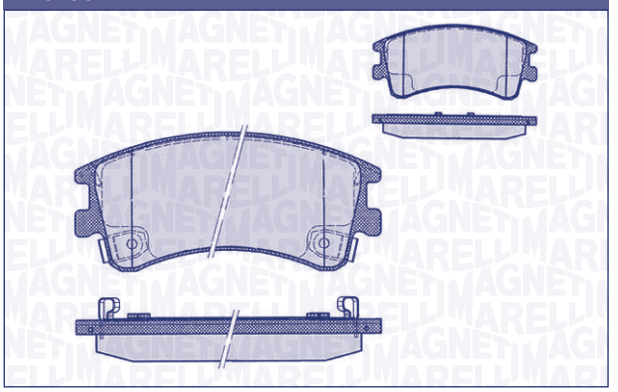

F/R	WVA	W×H×Th (mm)	SiS	Nr. Pz	W.i.	i	Extra kit [Opt]
F	24046 24047 24048	132×59,5×18,5	AK	2x 1x 1x	2x	–	

MAZDA	
6	02 →

PF0296

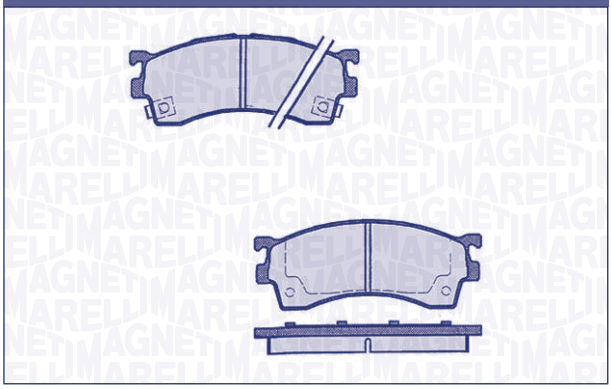

F/R	WVA	W×H×Th (mm)	SiS	Nr. Pz	W.i.	i	Extra kit [Opt]
F	21754 21755 21756 21757	131,5×51,5×16 131,9×51,5×16	ST	2x 1x 1x	2x	–	

MAZDA	
626 (GE)	92 →
Anfini MS-6	92 →
Anfini MS-8	92 →
Clef	92 →
Cronos	92 →
Eunos 500	94 →
MX 6	91 →
Xedos 6	92 →

PF0297

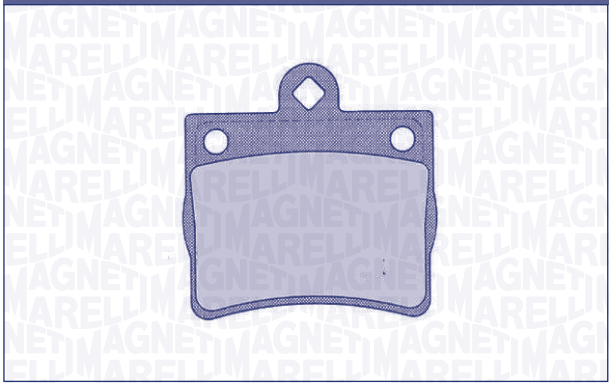

F/R	WVA	W×H×Th (mm)	SiS	Nr. Pz	W.i.	i	Extra kit [Opt]
R	21900	63,7×63,4×15,5	ATE	4x	[-]	–	

MERCEDES	
C (W202)	95 →

PF0298



F/R	WVA	W×H×Th (mm)	SiS	Nr. Pz	W.i.	i	Extra kit [Opt]
F	29192	163,3×67,1×20,9	BR	4x	[o]	–	OK060

MERCEDES	
Sprinter 3-t (906)	06/06 →
Sprinter 3,5-t (906)	06/06 →
VOLKSWAGEN	
Crafter 30-35 (2E)	04/06 →
Crafter 30-50 (2E)	04/06 →

PF0299

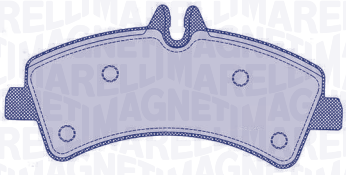

F/R	WVA	W×H×Th (mm)	SiS	Nr. Pz	W.i.	i	Extra kit [Opt]
R	29217	165×78,1×20,5	BR	4x	[-]	–	OK072

MERCEDES	
Sprinter 4,6-t (906)	06/06 →
Sprinter 5-t (906)	06/06 →
VOLKSWAGEN	
Crafter 50 Furgone (2E)	
Crafter 50 Pianale (2E)	

PF0300

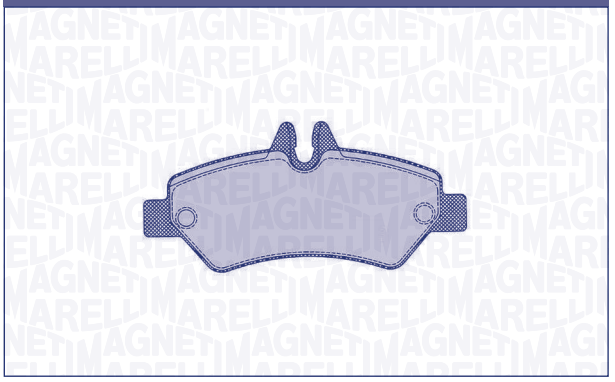

F/R	WVA	W×H×Th (mm)	SiS	Nr. Pz	W.i.	i	Extra kit [Opt]
R	29190	136,8×63×20	BR	4x	[-]	–	OK033/ OK038/ OK042

MERCEDES	
Sprinter 3-t (906)	06/06 →
Sprinter 3,5-t (906)	06/06 →
Sprinter 4.6-t (906)	06/06 →
VOLKSWAGEN	
Crafter 30-35 (2E)	04/06 →
Crafter 30-50 (2E)	04/06 →

PF0301

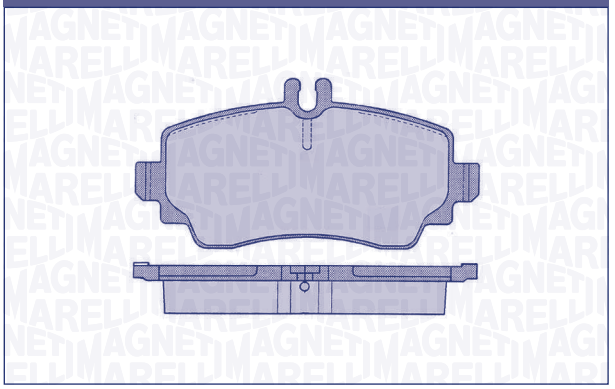

F/R	WVA	W×H×Th (mm)	SiS	Nr. Pz	W.i.	i	Extra kit [Opt]
F	23070	116,8×57,2×17	LG	4x	[-]	–	OK037/ OK073/ OK076

MERCEDES	
A (W168)	97 →

PF0302

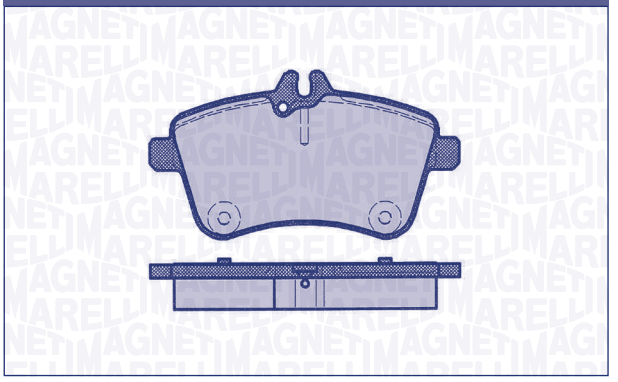

F/R	WVA	W×H×Th (mm)	SiS	Nr. Pz	W.i.	i	Extra kit [Opt]
F	24077	116,6×63,9×19	LG	4x	[o]	–	OK027/ OK032/ OK043/ OK070

MERCEDES	
A (W169)	08/04 →
B (W245)	03/05 →

PF0303

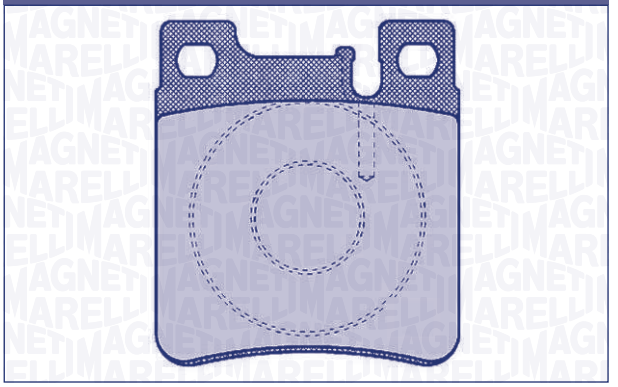

F/R	WVA	W×H×Th (mm)	SiS	Nr. Pz	W.i.	i	Extra kit [Opt]
R	21305	61,7×69,8×15,2	ATE	4x	[o]	4 antirumore in confezione / 4 antinoise in the box	

MERCEDES	
CLK (208)	97 →
CLK (C209) 55 AMG	02 →
CLK Cabriolet (A209) 55 AMG	05/03 →
E 50 AMG	95 →
E 55 AMG	→ 11/97
S (R129)	93 →
S (W140)	91 →
S 55 AMG	99 →
S/CL Coupé (C140)	96 →
SLK (170)	97 →

PF0304

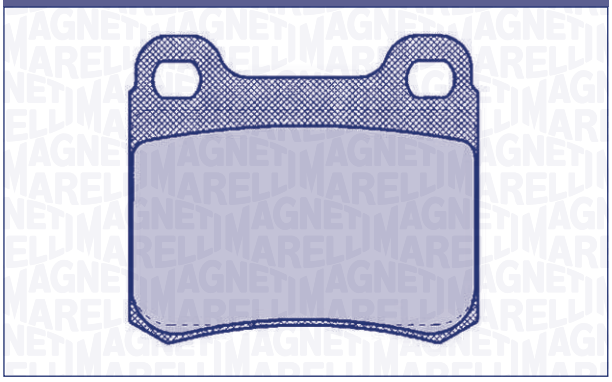

F/R	WVA	W×H×Th (mm)	SiS	Nr. Pz	W.i.	i	Extra kit [Opt]
R	20758	61,7×54,2×13,5	ATE	4x	[-]	–	

MERCEDES	
E (W124)	85 →
E Coupé (W124)	87 →

PF0305

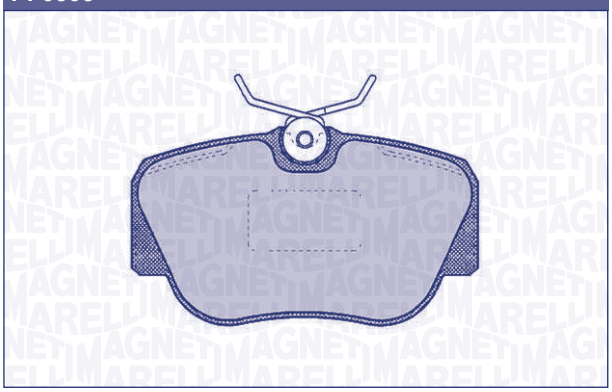

F/R	WVA	W×H×Th (mm)	SiS	Nr. Pz	W.i.	i	Extra kit [Opt]
F	21055	95×53×18	LG	4x	[-]	–	OK032

MERCEDES	
Serie 190 (W201)	85 →

PF0306

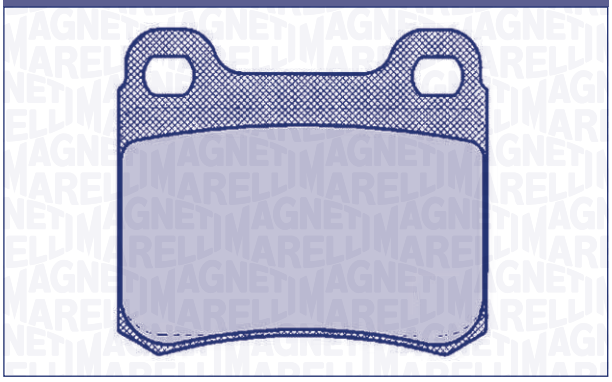

F/R	WVA	W×H×Th (mm)	SiS	Nr. Pz	W.i.	i	Extra kit [Opt]
R	20687	61,7×54,2×15,5	ATE	4x	[-]	–	

MERCEDES	
Serie 190 (W201)	82 →
C (W202)	93 →
C Kompressor (W202)	95 →

PF0307

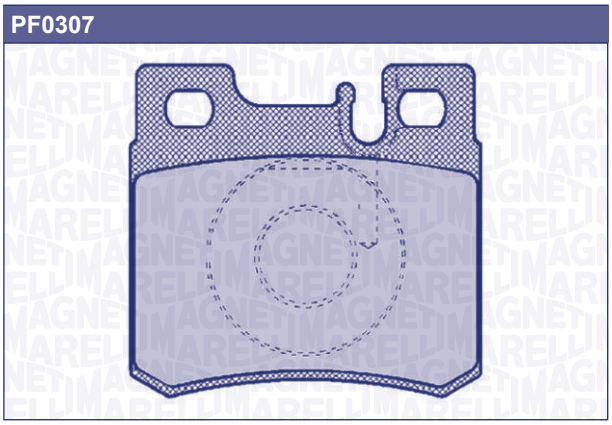

F/R	WVA	W×H×Th (mm)	SiS	Nr. Pz	W.i.	i	Extra kit [Opt]
R	21197	61,7×58,5×15,2	ATE	4x	[o]	4 antirumore in confezione / 4 antinoise in the box	

MERCEDES	
Serie 190 (W201)	89 →
Serie 190 (W201) Evoluzione	05/90 →
C (W202)	93 →
CLK (208)	97 →
E (W124)	85 →
E Tre volumi (W124)	88 →
E (W124) Cabrio	06/93 →
E (W210)	95 →
E Coupé (W124)	89 →
S (R129)	89 →
SLK (170)	96 →

PF0308

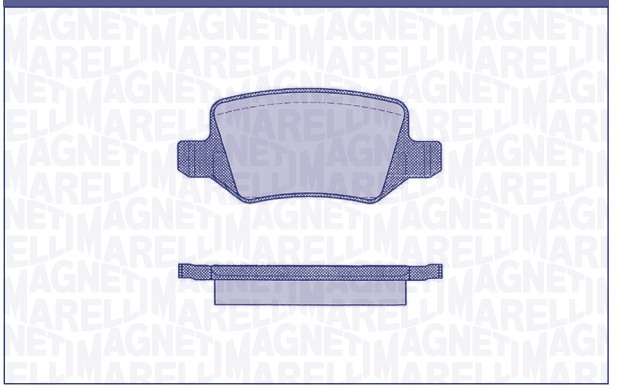

F/R	WVA	W×H×Th (mm)	SiS	Nr. Pz	W.i.	i	Extra kit [Opt]
R	23138	96,5×41,5×14,3	LG	4x	[-]	–	OK037/ OK062

MERCEDES	
A (W168)	98 →
A (W169) Coupe	05 →
B (W245)	03/05 →
Vaneo (414)	01 →

PF0309

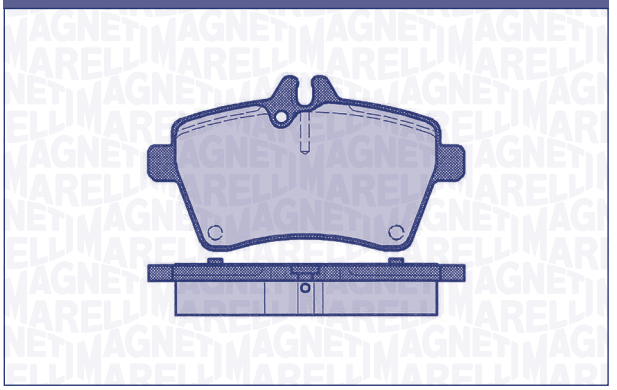

F/R	WVA	W×H×Th (mm)	SiS	Nr. Pz	W.i.	i	Extra kit [Opt]
F	23881	131,7×69,9×20	LG	4x	[o]	–	OK032/ OK044/ OK027

MERCEDES	
A (W169)	08/04 →
B (W245)	03/05 →

PF0310

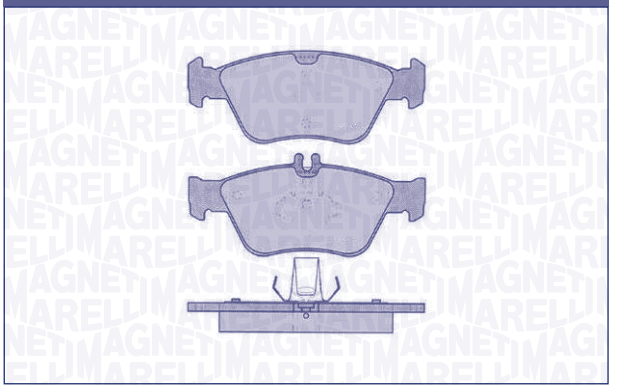

F/R	WVA	W×H×Th (mm)	SiS	Nr. Pz	W.i.	i	Extra kit [Opt]
F	21664 21795	150,1×59,4×19,5 151,3×67×19,5	ATE	2x 2x	[o]	–	OK020

MERCEDES	
C (W202)	95 →
C 36 AMG Sport (206kw)	94 →
C Kompressor (W202)	95 →
CLK (208)	97 →
E (W210)	95 →
SLK (170)	96 →

PF0311

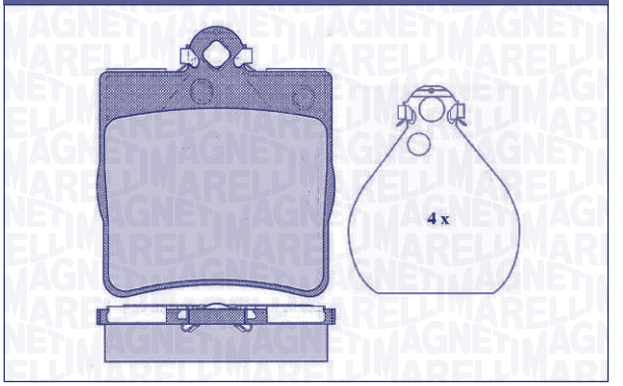

F/R	WVA	W×H×Th (mm)	SiS	Nr. Pz	W.i.	i	Extra kit [Opt]
R	21919	63,8×73×14,2	ATE	4x	[-]	4 antirumore in confezione / 4 antinoise in the box	

CHRYSLER	
Crossfire	07/03 →
Crossfire Roadster	05/04 →

PF0311

MERCEDES	
C (W202)	96 →
C (203)	00 →
CLC	05/08 →
CLK (208)	97 →
CLK (C209)	06/02 →
CLK Cabriolet (A209)	02/03 →
SLK (170)	97 →
SLK (R171)	06/04 →
Sport Coupè C	01/03 →

PF0312

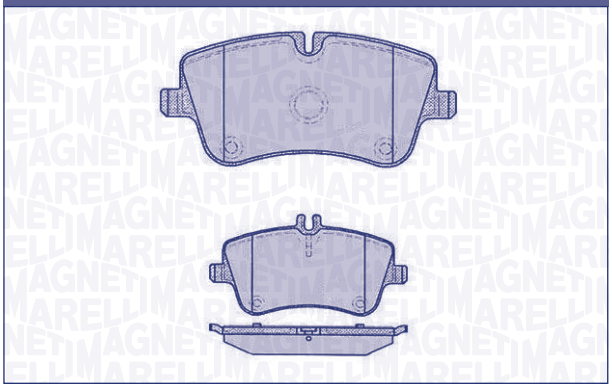

F/R	WVA	W×H×Th (mm)	SiS	Nr. Pz	W.i.	i	Extra kit [Opt]
F	23144 23145	131,1×69,8×19,5 131,1×62,1×19,5	LG	2x 2x	[o]	–	OK037/ OK017/ OK024

MERCEDES	
C (203)	00 →
CLC	05/08 →
CLK (C209)	06/02 →
CLK Cabriolet (A209)	02/03 →
SLK (R171)	06/04 →
Sport Coupè C (203)	01/03 →

PF0313

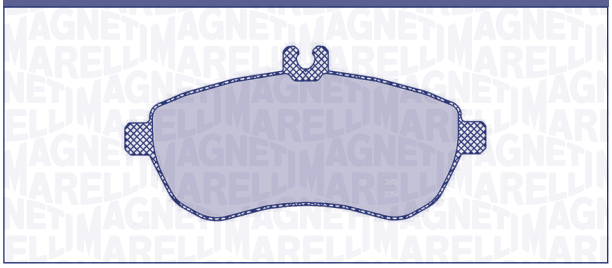

F/R	WVA	W×H×Th (mm)	SiS	Nr. Pz	W.i.	i	Extra kit [Opt]
F	24306	146,2×71,5×20,6	LG	4x	[o]	–	OK027/ OK039/ OK044/ OK059

MERCEDES	
C (W204)	01/07 →
C SW (S204)	08/07 →
C Coupé (C204)	06/11 →
E (W212)	01/09 →
E T.Model (S212)	11/09 →
E Cabriolet (A207)	01/10 →
E Coupé (C207)	01/09 →
GLK (X204)	08 →
SLK (R176)	02/11 →
C Coupé (C204)	06/11 →

PF0314

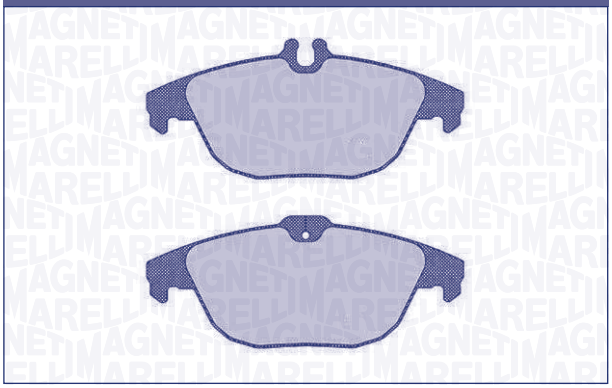

F/R	WVA	W×H×Th (mm)	SiS	Nr. Pz	W.i.	i	Extra kit [Opt]
R	24253 24254 25282	122,5×52,1×17,9 122,5×54,3×17,9	ATE	2x 2x	[-]	–	OK027

MERCEDES	
C (W204)	01/07 →
C (S204) SW	08/07 →
E T.Model (S212)	11/09 →
E Cabriolet (A207)	01/10 →
E Coupé (C207)	01/09 →
GLK (X204)	08 →

PF0315

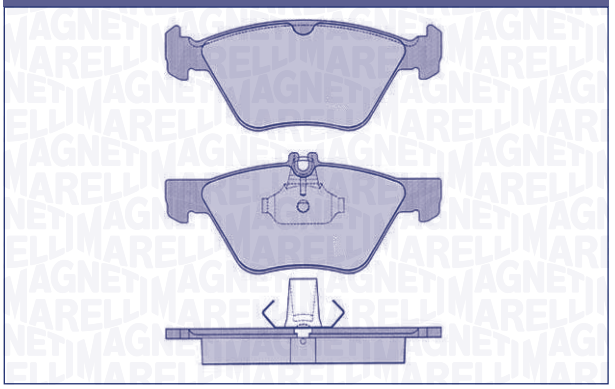

F/R	WVA	W×H×Th (mm)	SiS	Nr. Pz	W.i.	i	Extra kit [Opt]
F	21670 21794	156,4×63,8×20 156,2×69,4×20	ATE	2x 2x	[o]	–	OK020

CHRYSLER	
Crossfire	07/03 →
Crossfire Roadster	04 →
MERCEDES	
CLK (208)	97 →
E (W210)	95 →
SLK (170)	97 →

PF0316

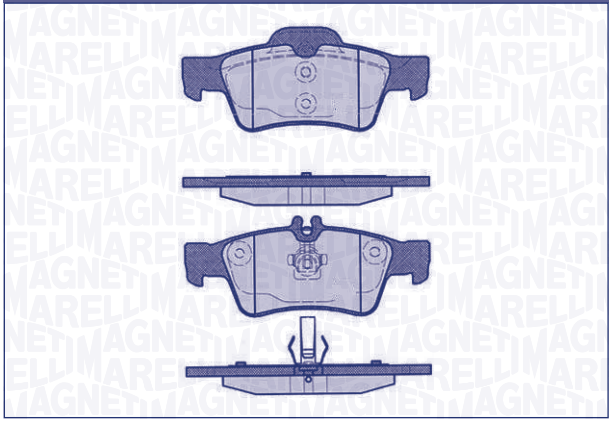

F/R	WVA	W×H×Th (mm)	SiS	Nr. Pz	W.i.	i	Extra kit [Opt]
R	23334 23335	141,3×57,4×16,5 140,2×59,6×16,5	ATE	2x 2x	[-]	–	

MERCEDES	
C (203)	02/04 →
CLS (C219)	10/04 →
E (W211)	03/02 →
E (W212)	01/09 →
SL (R230)	03/03 →
S (W220)	10/98 →

PF0317

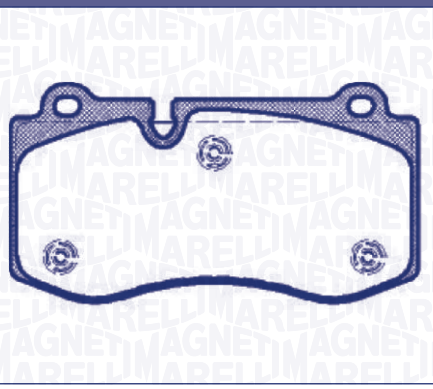

F/R	WVA	W×H×Th (mm)	SiS	Nr. Pz	W.i.	i	Extra kit [Opt]
F	23960	141,6×75,8×17,6	BR	4x	[-]	–	

MERCEDES	
S (W221)	10/05 →
SL (R230) 500	03/06 →

PF0318

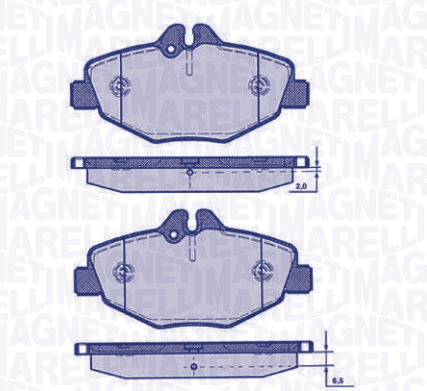

F/R	WVA	W×H×Th (mm)	SiS	Nr. Pz	W.i.	i	Extra kit [Opt]
F	23743 23744	136,9×67,8×20	BSC	2x 2x	[o]	–	OK012/ OK078/ OK026

MERCEDES	
E (W211)	05/02 →

PF0319

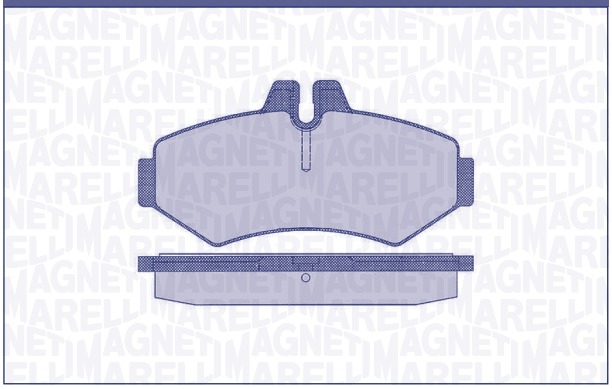

F/R	WVA	W×H×Th (mm)	SiS	Nr. Pz	W.i.	i	Extra kit [Opt]
R	23021	125,9×61,9×18,8	BSC	4x	[o]	–	OK021

MERCEDES	
Sprinter	95 →
G (W460)(W461)(W463)	89 →
VOLKSWAGEN	
LT 35	98 →

PF0320

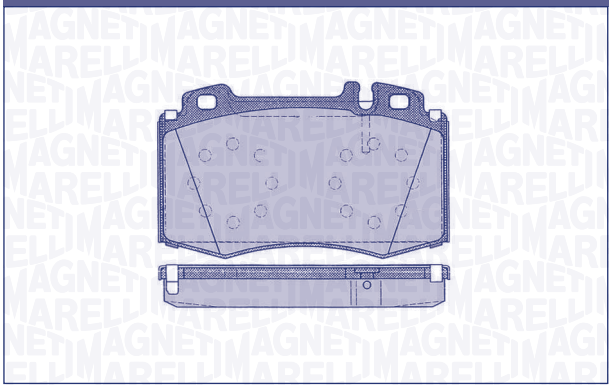

F/R	WVA	W×H×Th (mm)	SiS	Nr. Pz	W.i.	i	Extra kit [Opt]
F	23045 23271	119,8×71,6×17,2	BR	4x	[o]	–	

MERCEDES	
C (203) 55 AMG	02/04 →
CL 500 (215)	03/99 →
ML (W163)	98 →
S (W220)	98 →
S/CL Coupè (C215)	03/99 →

PF0321

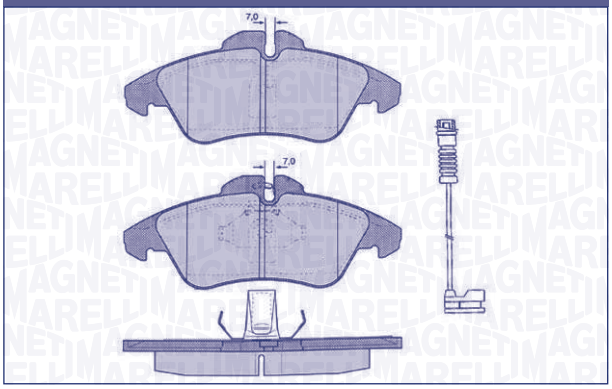

F/R	WVA	W×H×Th (mm)	SiS	Nr. Pz	W.i.	i	Extra kit [Opt]
F	23990 23991	156,5×64,8×20,5	ATE	2x 2x	2x	w.i. L=210mm	

MERCEDES	
Sprinter 2-t (901-902)	95 →
Sprinter 3-t (903)	95 →
V (638)	96 →
Vito	95 →
VOLKSWAGEN	
LT	96 →

PF0322

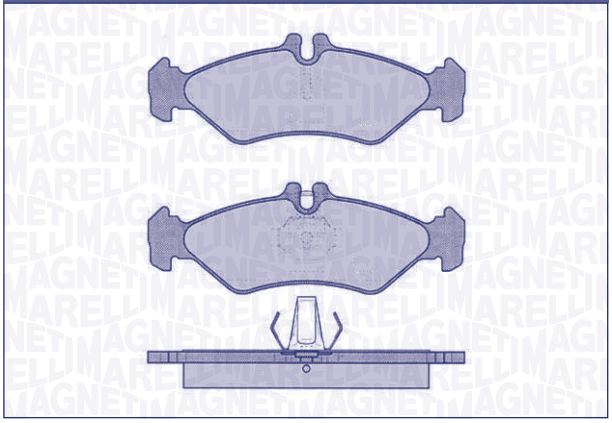

F/R	WVA	W×H×Th (mm)	SiS	Nr. Pz	W.i.	i	Extra kit [Opt]
R	21621 21622	141,4×50,1×17	ATE	2x 2x	[o]	–	OK023

MERCEDES	
Sprinter 2-t (901-902)	95 →
VOLKSWAGEN	
LT	96 →

PF0323

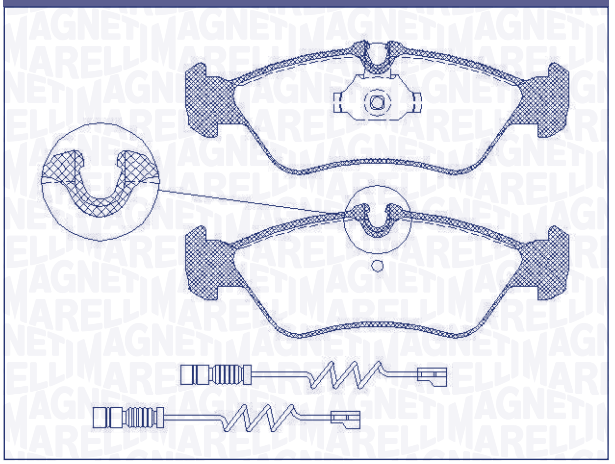

F/R	WVA	W×H×Th (mm)	SiS	Nr. Pz	W.i.	i	Extra kit [Opt]
R	23901 23902	156,4×54,8×18,5	ATE	2x 2x	2x	w.i. L= 190mm	

MERCEDES	
Sprinter	95 →

PF0324

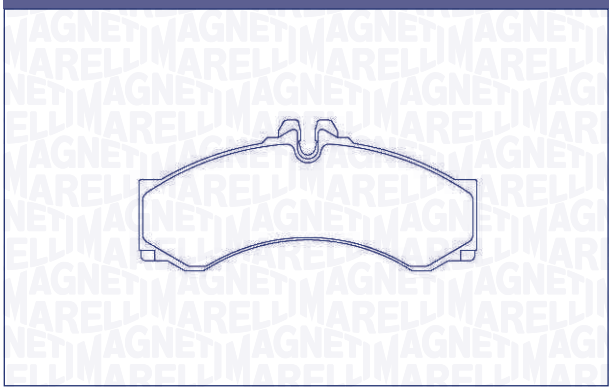

F/R	WVA	W×H×Th (mm)	SiS	Nr. Pz	W.i.	i	Extra kit [Opt]
F/R	29153	164,6×73,1×20	PT	4x	[-]	–	

MERCEDES	
Sprinter 2-t (901-902)	95 →
Sprinter 3-t (903)	95 →
Sprinter 4-t (904)	02/96 →

PF0325

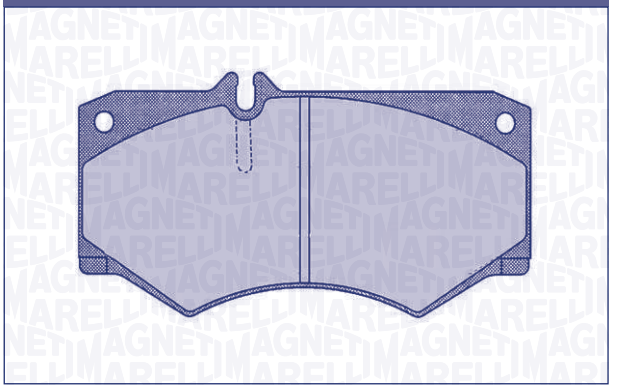

F/R	WVA	W×H×Th (mm)	SiS	Nr. Pz	W.i.	i	Extra kit [Opt]
F	20784	149×69×18	PT	4x	[-]	–	OK068

MERCEDES	
Serie G (W460)	79 →
Serie G (W461/463)	90 →
Serie G Cabrio (W463)	90 →
Serie L	82 →
MB 130 Unimog	90 →
MB 131	90 →

PF0326

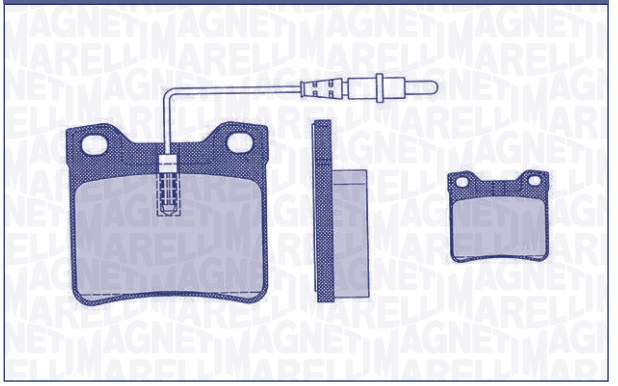

F/R	WVA	W×H×Th (mm)	SiS	Nr. Pz	W.i.	i	Extra kit [Opt]
R	21572 21904	63,8×57,6×17	ATE	2x 2x	2x	w.i. L=100mm	

MERCEDES	
V (638)	96 →
Vito	96 →

PF0327

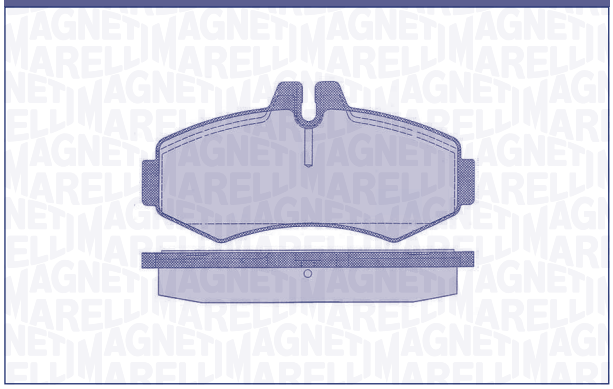

F/R	WVA	W×H×Th (mm)	SiS	Nr. Pz	W.i.	i	Extra kit [Opt]
F	23022	134,5×64,6×20,8	BSC	4x	[0]	–	OK023

MERCEDES	
V (638)	98 →
V (443)	14 →
Vito	98 →

PF0328

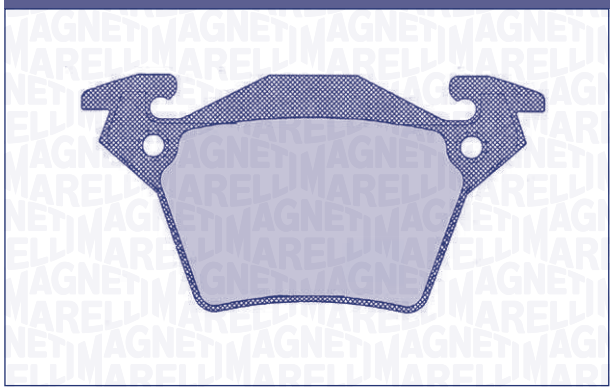

F/R	WVA	W×H×Th (mm)	SiS	Nr. Pz	W.i.	i	Extra kit [Opt]
R	23020	105×52,8×17,8	BSC	4x	[-]	4 antirumore in confezione / 4 antinoise in the box	

MERCEDES	
V (638)	98 →
V (443)	14 →
Vito	98 →

PF0329

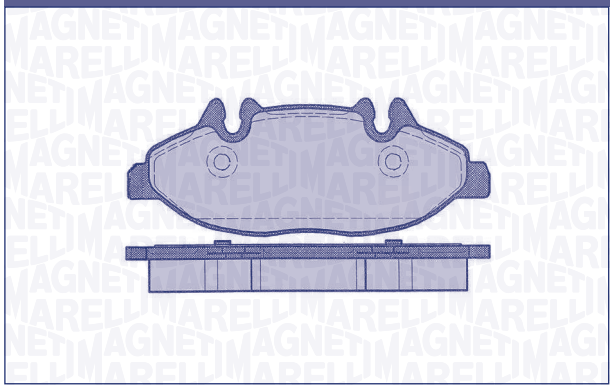

F/R	WVA	W×H×Th (mm)	SiS	Nr. Pz	W.i.	i	Extra kit [Opt]
F	24007	164,9×60×20,6	BR	4x	[-]	–	OK033/ OK038/ OK042

MERCEDES	
Viano (W639)	07/03 →
Vito II (W639)	03 →

PF0330

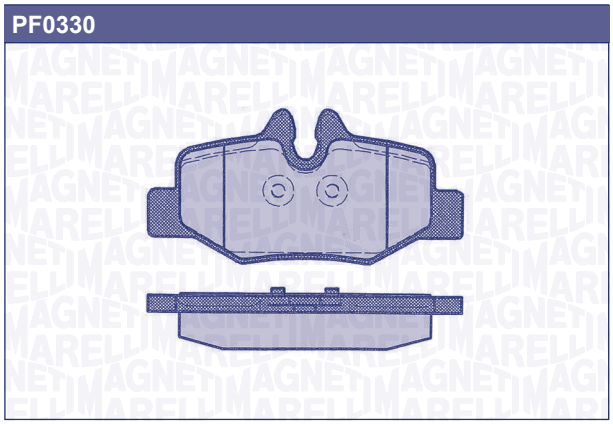

F/R	WVA	W×H×Th (mm)	SiS	Nr. Pz	W.i.	i	Extra kit [Opt]
R	24008	101,9×50,3×18,3	BR	4x	[-]	–	OK033/ OK038/ OK042

MERCEDES	
Viano (W639)	07/03 →
Vito II (W639)	03 →

PF0331

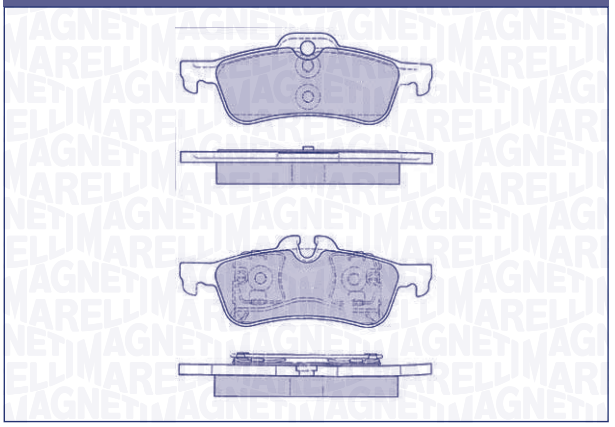

F/R	WVA	W×H×Th (mm)	SiS	Nr. Pz	W.i.	i	Extra kit [Opt]
R	23716 24043	123,2×43,8×16,1	ATE	2x 2x	[o]	–	OK057

MINI (BMW)	
One	02/03 →
Cooper One	02/03 →
Cooper One S	02/03 →
Cooper John Cooper Works (JCW)	06 →
Cooper S John Cooper Works (JCW)	06 →
One Cabriolet	07/04 →
One Cabriolet Cooper	07/04 →

PF0332

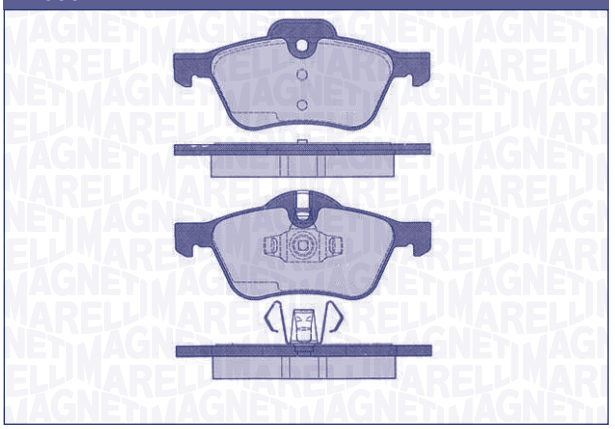

F/R	WVA	W×H×Th (mm)	SiS	Nr. Pz	W.i.	i	Extra kit [Opt]
F	23281 23282	140×59×18,3 140×60×18,3	ATE	2x 2x	[o]	–	OK055

MINI (BMW)	
Cooper One	01 →
Cooper One S	03/02 →
One	01 →
One Cabriolet	07/04 →
One Cabriolet Cooper	07/04 →

PF0333

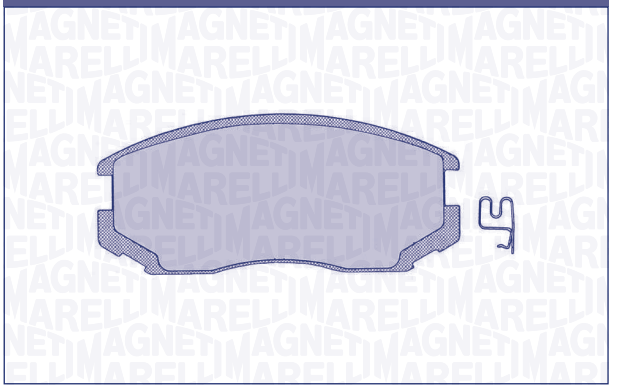

F/R	WVA	W×H×Th (mm)	SiS	Nr. Pz	W.i.	i	Extra kit [Opt]
F	21650	114,1×19,9×15	ST	4x	2x	2 segnalatori acustici / 2 acoustic sensors	

DAIHATSU	
Atria	08/99 →
Be-Go	11/05 →
Extol Bus (K3)	07/00 →
Rush	11/05 →
Terios	98 →
Terios II	12/06 →
DODGE	
Colt 2 Door	93 →
MITSUBISHI	
Colt	90 →
PROTON	
Aeroback (C_)	88 →
Gen 2 (CM_)	04 →
Jumbuck Pick-up	02 →
Persona	93 →
Proton	91 →
Saga 2	88 →
Saloon (C2_)	91 →
Satria (C9_)	00 →
Wira	91 →
Wira II	98 →
TOYOTA	
Cami	97 →
Rush	06 →

PF0334

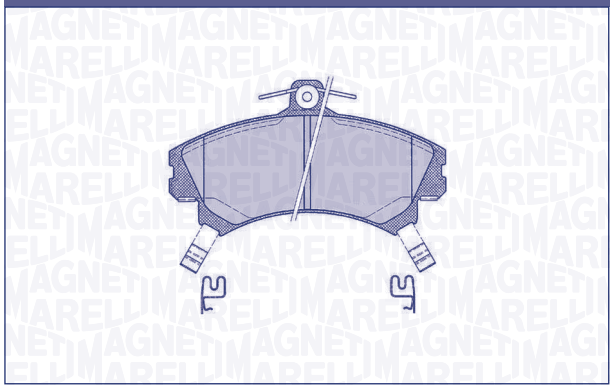

F/R	WVA	W×H×Th (mm)	SiS	Nr. Pz	W.i.	i	Extra kit [Opt]
F	21796 21920 21982	130×72,6×15,5	LG	4x	4x	4 segnalatori acustici / 4 acoustic sensor	OK012

MCC (MERCEDES)	
Smart forfour	01/04 →
MITSUBISHI	
Carisma	95 →
Space Star	99 →
VOLVO	
S 40	95 →
V 40	95 →

PF0335

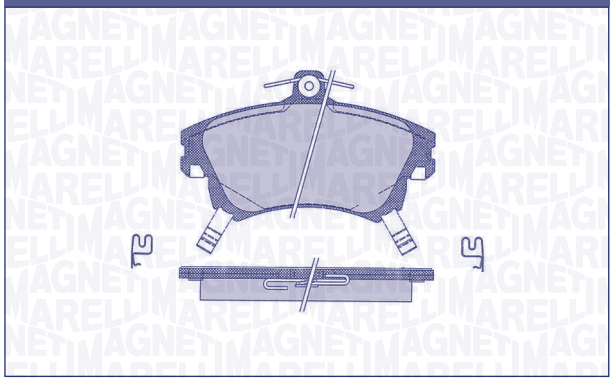

F/R	WVA	W×H×Th (mm)	SiS	Nr. Pz	W.i.	i	Extra kit [Opt]
F	21983	130×78,1×17,3	LG	4x	2x	2 segnalatori acustici / 2 acoustic sensors	OK030

MITSUBISHI	
Colt VI 15"	06/04 →
Colt CZC Cabrio	06 →
VOLVO	
S 40	01/98 →
V 40	01/98 →

PF0336

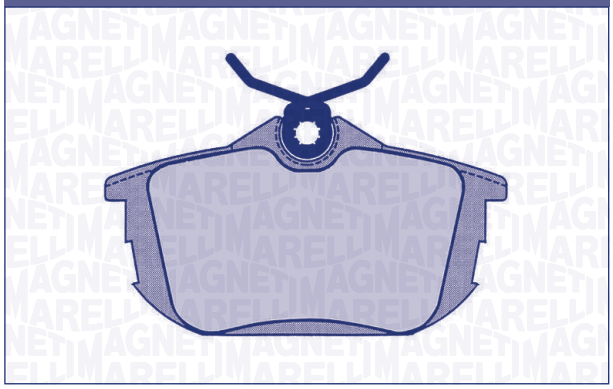

F/R	WVA	W×H×Th (mm)	SiS	Nr. Pz	W.i.	i	Extra kit [Opt]
R	21861	87×47×16,5	LG	4x	4x	4 segnalatori acustici / 4 acoustic sensor	OK030

MITSUBISHI	
Carisma	95 →
Colt VI	06/04 →
Colt CZC Cabrio	06 →
Space Star	99 →
VOLVO	
S 40	95 →
S 40 II	01/98 →
V 40	95 →
V 40 II	01/98 →

PF0337

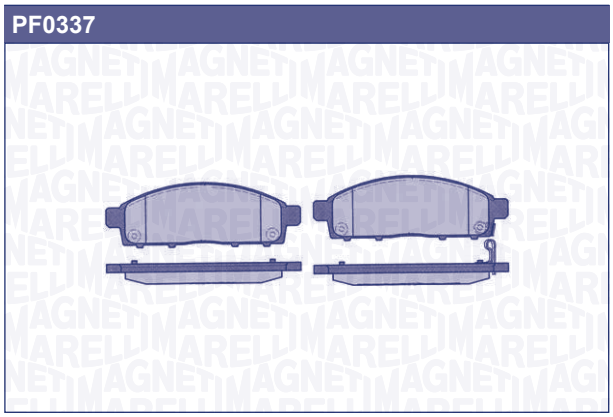

F/R	WVA	W×H×Th (mm)	SiS	Nr. Pz	W.i.	i	Extra kit [Opt]
F	24529 24530	155,4×51×16	TOK	3x 1x	1x	–	

MITSUBISHI	
L200 II	11/05 →
Triton	07/06 →
Hunter	07/06 →

PF0338

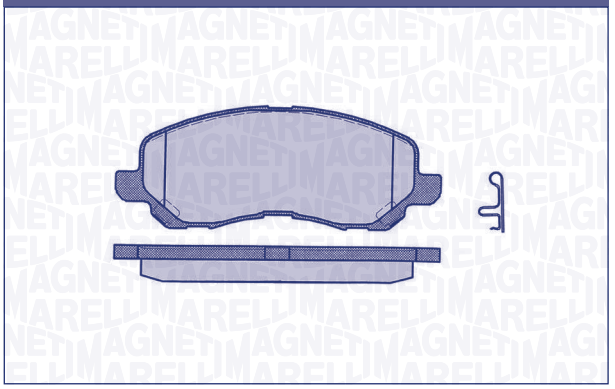

F/R	WVA	W×H×Th (mm)	SiS	Nr. Pz	W.i.	i	Extra kit [Opt]
F	23584	144,9×54,9×15,6	ST	4x	2x	2 segnalatori acustici / 2 acoustic sensors	

CHRYSLER	
Sebring II (JS)	07 → 10
Sebring Cabriolet II (JS)	07 → 10
CITROËN	
C4 Aircross	04/12 →
DODGE	
Avenger	06/07 →
Caliber	06/06 →
JEEP	
Compass	96 →
Patriot	01/08 →
MITSUBISHI	
ASX	02/10 →
Eclipse II	01 →
Lancer VII Sedan	03 →
Lancer VII SW	03 →
Space Runner II (N50)	00 →
PEUGEOT	
4008	05/12 →

PF0339

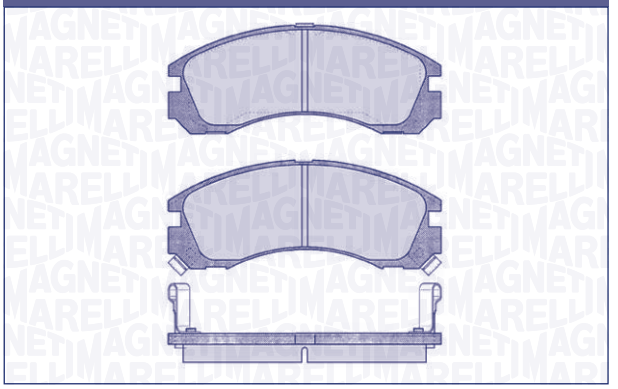

F/R	WVA	W×H×Th (mm)	SiS	Nr. Pz	W.i.	i	Extra kit [Opt]
F	21363 21768 21769	150×59×15,4	AK	2x 1x 1x	[-]	–	

MITSUBISHI	
Diamante	92 →
Eclipse 4x4	91 →
Galant VI (EA.)	96 →
L 200 (KT)	06/96 →
L 400 (PA) Autobus	96 →
L 400 (PA) Furgonato	96 →
Montero	91 →
Pajero II	12/90 →
Shogun	94 →
Sigma V6	91 →
Space Runner II (N50)	00 →

PF0340

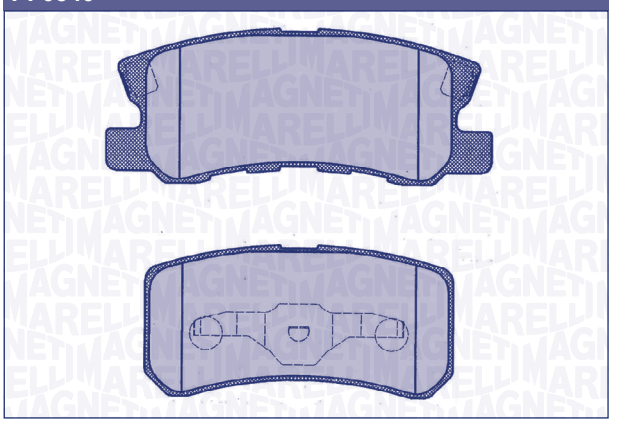

F/R	WVA	W×H×Th (mm)	SiS	Nr. Pz	W.i.	i	Extra kit [Opt]
R	23582 23583	91×44,8 ×15,4 111,5×45×15,4	AK	2x 2x	2x	–	

CITROËN	
C-Crosser	07 →
DODGE	
Avenger	06/07 →

PF0340

MITSUBISHI	
ASX	02/10 →
Galloper (JK)	02/99 →
Grandis	03 →
Outlander II	02/07 →
Pajero III	00 →
Pajero IV (V80)	02/07 →
PEUGEOT	
4008	05/12 →

PF0341



F/R	WVA	W×H×Th (mm)	SiS	Nr. Pz	W.i.	i	Extra kit [Opt]
R	21840 21841 21842	107,8×43,8×14,4	AK	2x 1x 1x	2x	–	

MITSUBISHI	
Montero	91 →
Pajero II (V;W)	04/91 →
Shogun	94 →
Sigma V6	91 →

PF0342

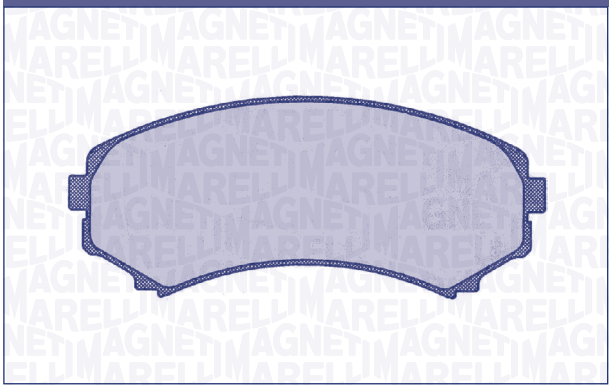

F/R	WVA	W×H×Th (mm)	SiS	Nr. Pz	W.i.	i	Extra kit [Opt]
F	23488 24066	139,2×58,9×16,6	ST	4x	2x	antirumore in confezione / antinoise in the box	

MAZDA	
E 2000	02/97 →
E 2200	02/97 →
MITSUBISHI	
Grandis	04/00 →
Pajero III	04/00 →
Pajero IV (V80)	02/07 →
Shogun (V60)	04/00 →

PF0343

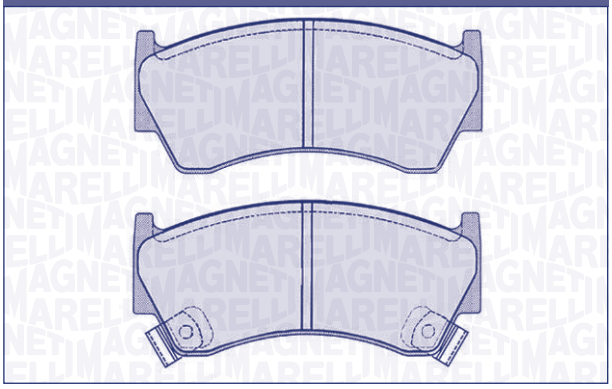

F/R	WVA	W×H×Th (mm)	SiS	Nr. Pz	W.i.	i	Extra kit [Opt]
F	23004 23005 23006	108,5×48×16	AK	2x 1x 1x	2x	–	

NISSAN	
200 SX	95 →
Almera (N15)	95 →
Sentra	95 →

PF0344

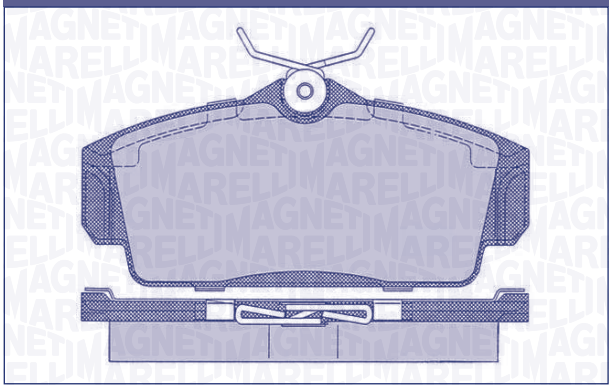

F/R	WVA	W×H×Th (mm)	SiS	Nr. Pz	W.i.	i	Extra kit [Opt]
F	23093 23463	124,2×57,2×16,5	LG	4x	[-]	–	

NISSAN	
Almera (N16)	00→
Primera (MK3)	99→
Primera (P11)	97→

PF0345

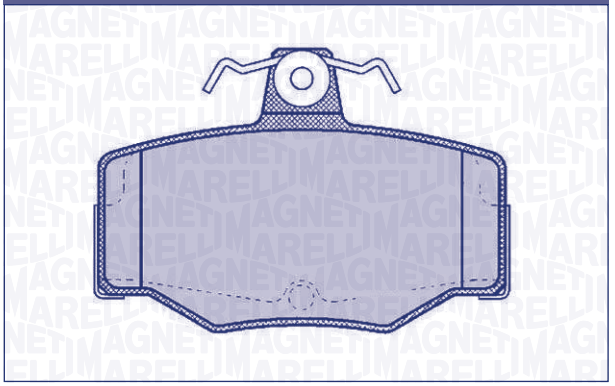

F/R	WVA	W×H×Th (mm)	SiS	Nr. Pz	W.i.	i	Extra kit [Opt]
R	21545	82,2×57×15,5	LG	4x	[-]	4 antirumore in confezione / 4 antinoise in the box	OK030

NISSAN	
Almera (N16)	00→
Almera Tino	00→
Primera (P10)	90→
Primera (P11)	97→

PF0346

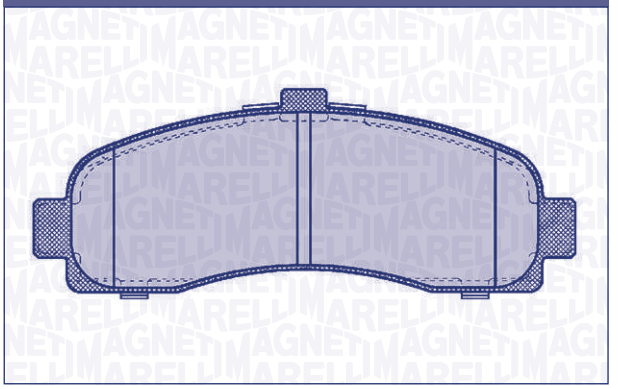

F/R	WVA	W×H×Th (mm)	SiS	Nr. Pz	W.i.	i	Extra kit [Opt]
F	21626	120,8×45×15,5	AK	4x	[-]	–	

NISSAN	
March	92→
Micra (K11)	92→

PF0347

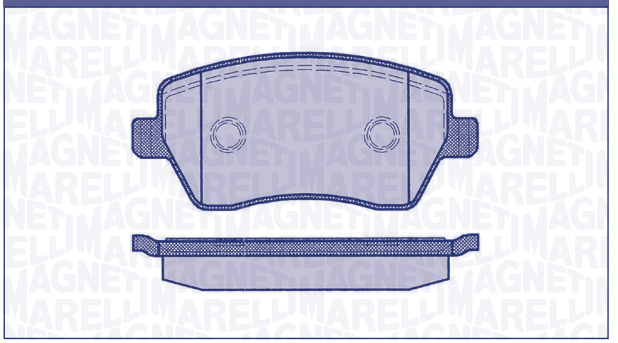

F/R	WVA	W×H×Th (mm)	SiS	Nr. Pz	W.i.	i	Extra kit [Opt]
F	23973	116,5×52,4×17	LG	4x	[-]	–	OK030/ OK058

DACIA	
Dokker	12→
Duster II	04/10→
Lodgy	03/12→
MERCEDES	
Citan	11/12→
NISSAN	
Micra II (K12)	01/03→
Micra II CC (K12)	06→
Note (E11)	03/06→
Note	13→
RENAULT	
Captur	06/13→
Clio III	05→
Clio IV / Grandtour	13→
Modus	04→
Zoe	06/12→

PF0348

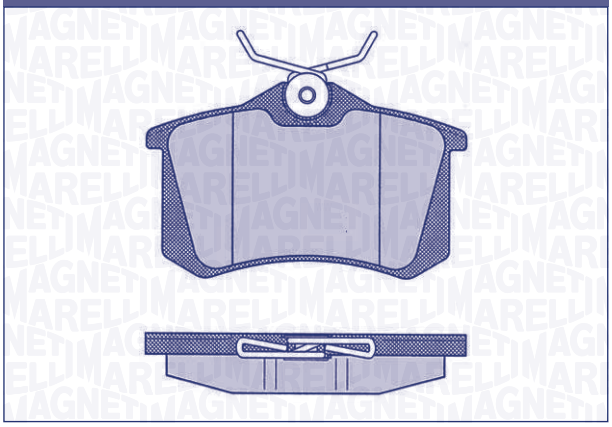

F/R	WVA	W×H×Th (mm)	SiS	Nr. Pz	W.i.	i	Extra kit [Opt]
R	20961	87×53×16	LG	4x	[-]	–	OK039/ OK041

NISSAN	
Tiida	07 →
PEUGEOT	
208	03/12 →
RENAULT	
Clio III/SW	05 →
Megane III	09 →
Modus	04 →
SEAT	
Altea XL (5P)	10/06 →
SKODA	
Favia SW (Combi)	10/07 →

PF0349

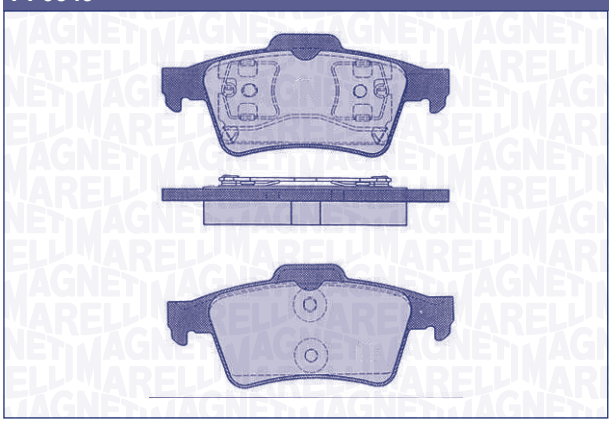

F/R	WVA	W×H×Th (mm)	SiS	Nr. Pz	W.i.	i	Extra kit [Opt]
R	23482 23483	123,1×52×16,4	ATE	2x 2x	[-]	–	

FORD	
Connect	12/02 →
NISSAN	
Primera III	03/02 →

PF0349

OPEL	
Signum	06/03 →
Vectra C	08/02 →
Vectra GTS C	08/02 →
RENAULT	
Espace IV	11/02 →
Laguna III	01 →
Vel Satis (BJ0)	02 →
SAAB	
9-3 II	02 →
9-3 II Cabriolet (YS3F)	08/03 →
9-3 II Sport Sedan AERO (YS3F)	05 →
9-3 II Sport Sedan AERO Cabriolet (YS3F)	03 →
VAUXHALL	
Vectra C	08/02 →
Vectra GTS C	03/03 →

PF0350

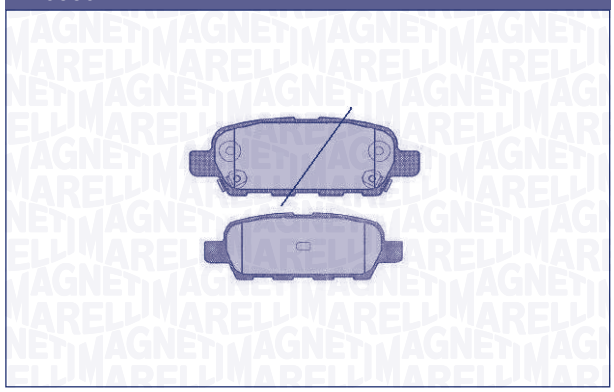

F/R	WVA	W×H×Th (mm)	SiS	Nr. Pz	W.i.	i	Extra kit [Opt]
R	24453	105,5×38,2×14,2	AK	2x 1x 1x	1x	–	

INFINITI	
FX	02/03 →
X-Trail (T30)	07/01 →
X-Trail II	06/07 →
NISSAN	
Juke	10 →
SUZUKI	
Kizashi (FR)	10/10 →

PF0351

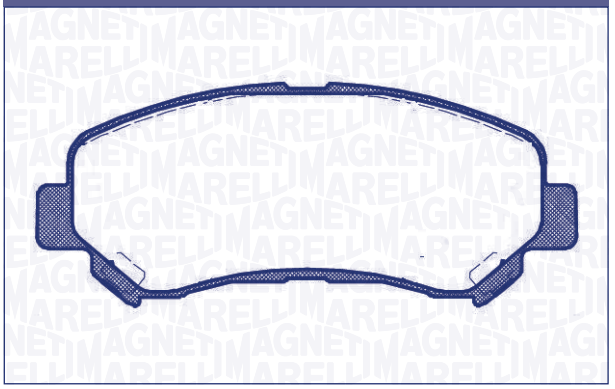

F/R	WVA	W×H×Th (mm)	SiS	Nr. Pz	W.i.	i	Extra kit [Opt]
F	24632	142×59×17	ST	4x	[-]	–	

NISSAN	
X-Trail II (T31)	06/07 →
Qashqai (J10)	07 →
SUZUKI	
Kizashi (FR)	10/10 →

PF0352

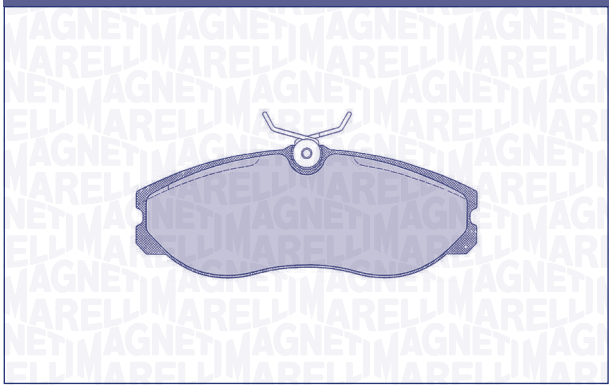

F/R	WVA	W×H×Th (mm)	SiS	Nr. Pz	W.i.	i	Extra kit [Opt]
F	21481	145×55,6×15,7	LG	4x	[-]	4 antirumore in confezione / 4 antinoise in the box	

FORD	
Maverick I	02/93 →
Maverick II	96 →
NISSAN	
Serena (C23M)	93 →
Terrano II	93 →
Vanette Cargo (C23)	96 →

PF0353

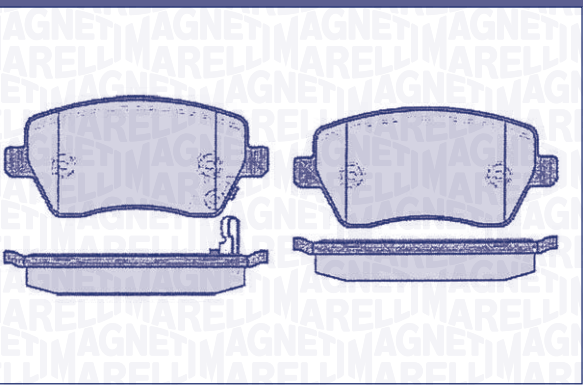

F/R	WVA	W×H×Th (mm)	SiS	Nr. Pz	W.i.	i	Extra kit [Opt]
F	23973 24403	116,5×52,4×17	LG	3x 1x	1x	–	OK030/ OK058

OPEL	
Agila II	02/08 →
SUZUKI	
Splash	01/08 →
Swift III	05 →

PF0354

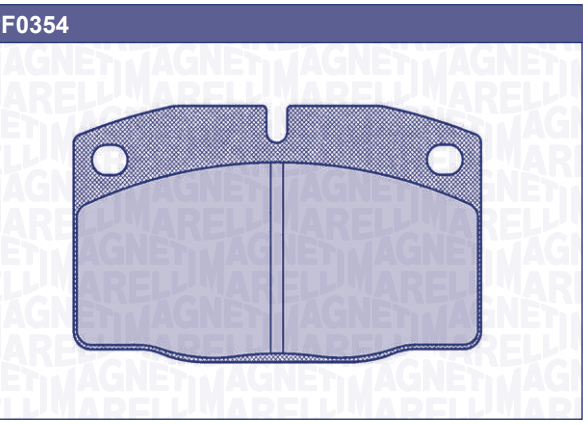

F/R	WVA	W×H×Th (mm)	SiS	Nr. Pz	W.i.	i	Extra kit [Opt]
F	20939	100×59×15,6	DM	4x	[-]	–	

BEDFORD	
Astra Van	79 →
DAEWOO	
Nexia	97 →
HOLDEN	
Barina	93 →
LOTUS	
Elan	89 →

PF0354

OPEL	
Ascona B	78 →
Ascona C	81 →
Combo Van	85 →
Corsa A	→ 91
Corsa Van A	02/86 →
Kadett D	79 →
Kadett E	84 →
Manta B	78 →
Omega A	86 →
Rekord E	81 →
Vectra A	88 →
VAUXHALL	
Astra	80 →
Belmont	86 →
Carlton	84 →
Cavalier	78 →
Nova	83 →

PF0355

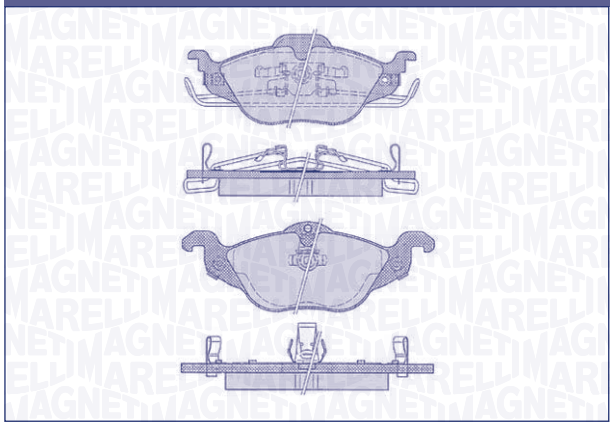

F/R	WVA	W×H×Th (mm)	SiS	Nr. Pz	W.i.	i	Extra kit [Opt]
F	23063 23064 23066 23067	160×62,5×17 177,8×63×18,3	ATE	1x 1x 1x 1x	4x	–	

OPEL	
Astra G	98 →
Astra Van	00 →

PF0356

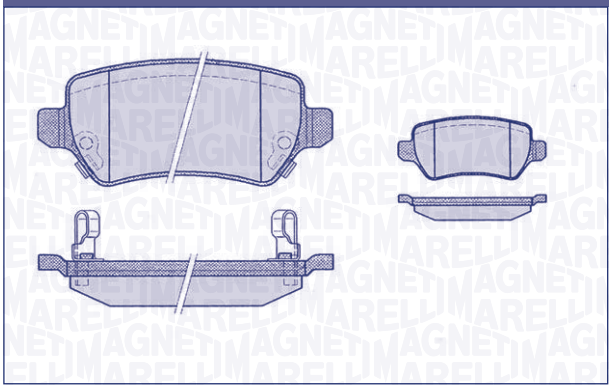

F/R	WVA	W×H×Th (mm)	SiS	Nr. Pz	W.i.	i	Extra kit [Opt]
R	23417 23654 23655	95,4×42,7×15	LG	2x 1x 1x	2x	–	OK039/ OK069

OPEL	
Astra G	06/01 →
Astra Van	00 →
Combo Van III	01 →
Meriva	03 →
Zafira	06/01 →

PF0357

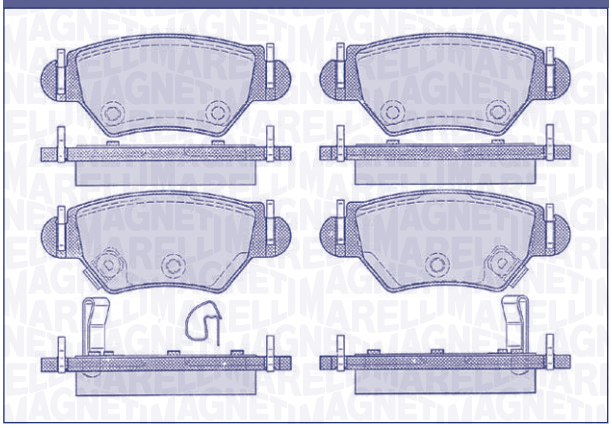

F/R	WVA	W×H×Th (mm)	SiS	Nr. Pz	W.i.	i	Extra kit [Opt]
R	23260 23261 23264 23265	104,8×42,7×16,5	BSC	1x 1x 1x 1x	2x	kit 8 molle / Kit 8 springs	OK034

OPEL	
Astra G	98 →
Astra Cabrio G	01 →
Astra Coupè G	98 →
Zafira	99 →

PF0358

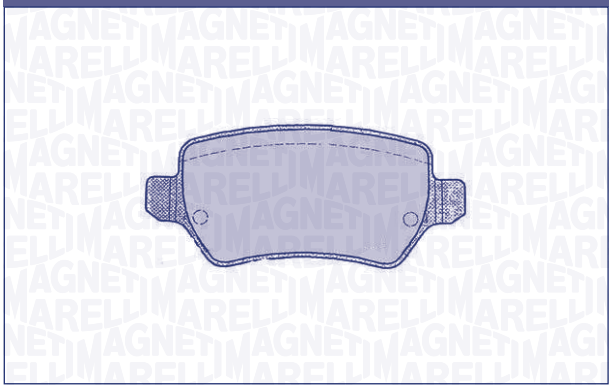

F/R	WVA	W×H×Th (mm)	SiS	Nr. Pz	W.i.	i	Extra kit [Opt]
R	23416 23417	95,4×42,7×15	LG	2x 2x	[-]	–	OK039/ OK069

OPEL	
Astra G	07/01 →
Astra H	03/04 →
Meriva	03 →
Meriva II	10 →
Zafira	07/01 →

PF0359



F/R	WVA	W×H×Th (mm)	SiS	Nr. Pz	W.i.	i	Extra kit [Opt]
R	21140	61,7×57,5×15,5	ATE	4x	[-]	–	

OPEL	
Astra F	91 →
Calibra	90 →
Kadett E	87 →
Vectra A	88 →
SAAB	
900	96 →
VAUXHALL	
Astra GTE	89 →
Cavalier	81 →

PF0360

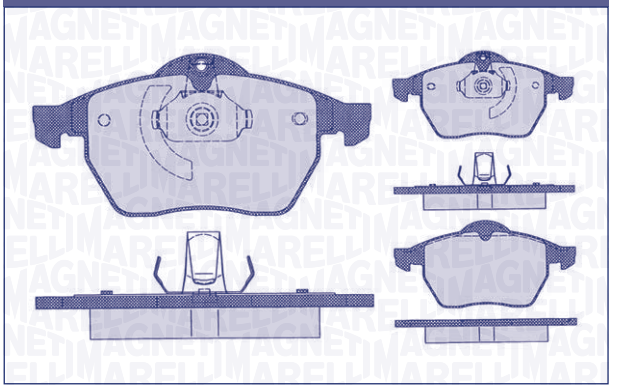

F/R	WVA	W×H×Th (mm)	SiS	Nr. Pz	W.i.	i	Extra kit [Opt]
F	21829 23115	156,4×74,2×20	ATE	2x 1x 1x	[-]	–	

OPEL	
Calibra	95 →
Vectra B	99 →
SAAB	
900	96 →
9-5	97 →

PF0361

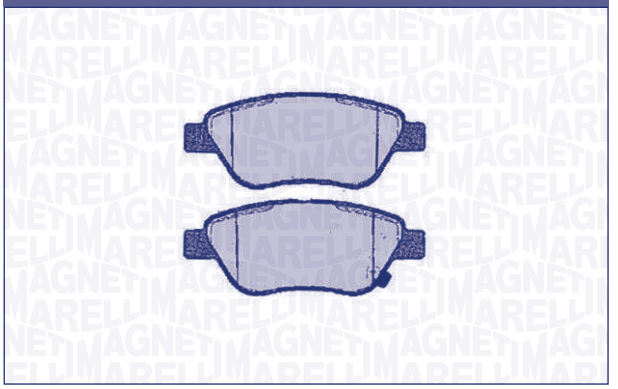

F/R	WVA	W×H×Th (mm)	SiS	Nr. Pz	W.i.	i	Extra kit [Opt]
F	23707 23982 24288	122,9×53,4×18	BSC	3x 1x	1x	–	OK012/ OK040

OPEL	
Corsa D	06 →

PF0362

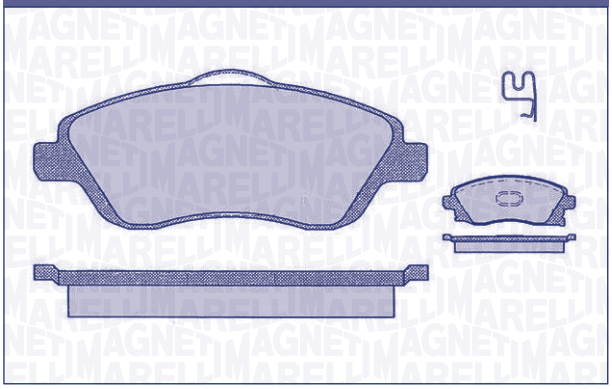

F/R	WVA	W×H×Th (mm)	SiS	Nr. Pz	W.i.	i	Extra kit [Opt]
F	23225	131,8×51,4×17 131,8×55,7×17	LG	2x 2x	2x	2 segnalatori acustici / 2 acoustic sensors	OK012/ OK035/ OK036

OPEL	
Corsa C tel. 44000000 →	03 →
Corsa Van	00 →
Combo III Van	01 →
Combo III Tour	01 →
Meriva	03 →
Tigra Twin Top	04 →

PF0364

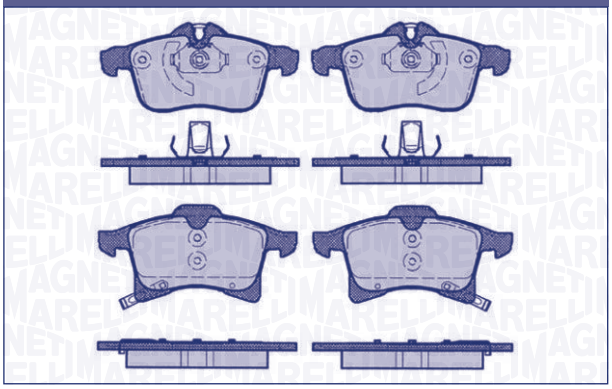

F/R	WVA	W×H×Th (mm)	SiS	Nr. Pz	W.i.	i	Extra kit [Opt]
F	23832 23833 23844	155,1×69,7×20,5 156×76×20,5	ATE	1x 1x 1x 1x	2x	–	OK056

OPEL	
Astra H	03/04 →
Combo III Van	01 →
Corsa C (Z17)	04 →
Corsa D	02/07 →
Meriva	03 →
Meriva II	10 →
Zafira	05 →

PF0363

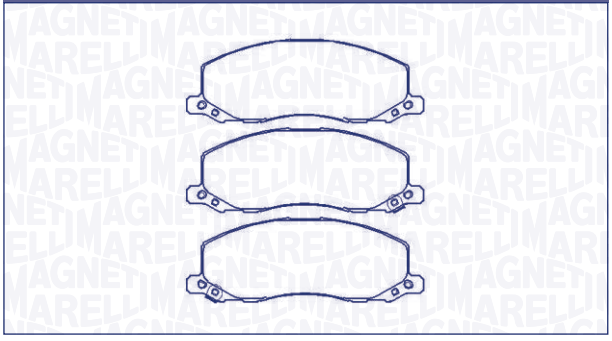

F/R	WVA	W×H×Th (mm)	SiS	Nr. Pz	W.i.	i	Extra kit [Opt]
F	24418 24419 24420	184,7×65,8×17	LG	2x 1x 1x	2x	–	

OPEL	
Insignia BN	08 →
Insignia SW	08 →
Insignia Sports Tourer	08 →
SAAB	
9-5 II (YS3G)	05/10 →
VAUXHALL	
Insignia BN-SW	08 →
Insignia Sports Tourer	08 →

PF0365

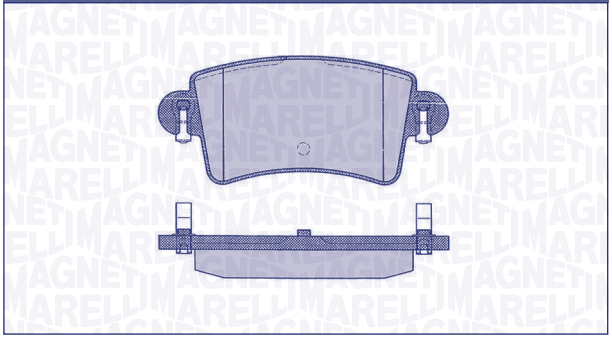

F/R	WVA	W×H×Th (mm)	SiS	Nr. Pz	W.i.	i	Extra kit [Opt]
R	23669	115×51,3×16,8	BSC	4x	[-]	–	OK033

NISSAN	
Interstar	07/02 →
OPEL	
Movano	01 →
RENAULT	
Master II	08/00 →
VAUXHALL	
Movano	01 →

PF0366

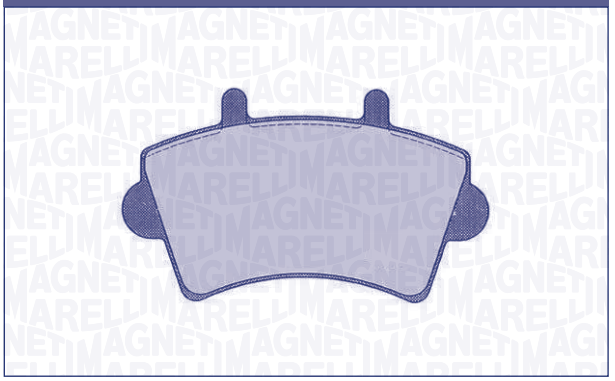

F/R	WVA	W×H×Th (mm)	SiS	Nr. Pz	W.i.	i	Extra kit [Opt]
F	23613	138,8×79,8×17,8	BSC	4x	[-]	–	

NISSAN	
Interstar	07/02 →
OPEL	
Movano	01 →
RENAULT	
Master II	08/00 →
VAUXHALL	
Movano	01 →

PF0367

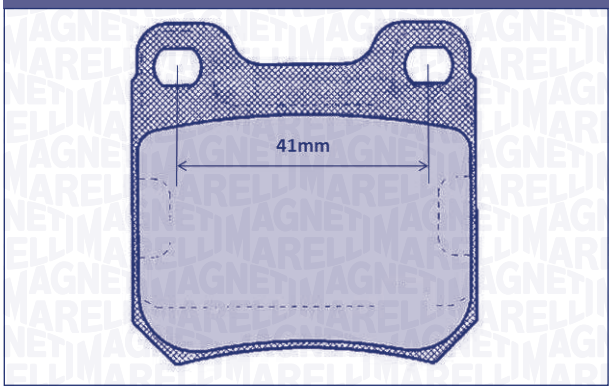

F/R	WVA	W×H×Th (mm)	SiS	Nr. Pz	W.i.	i	Extra kit [Opt]
R	21051	61,5×61×15	ATE	4x	[-]	interasse 41mm / enteraxle 41mm	

OPEL	
Omega A	86 →
Omega B	94 →
Tigra	95 →
VAUXHALL	
Carlton	84 →

PF0368

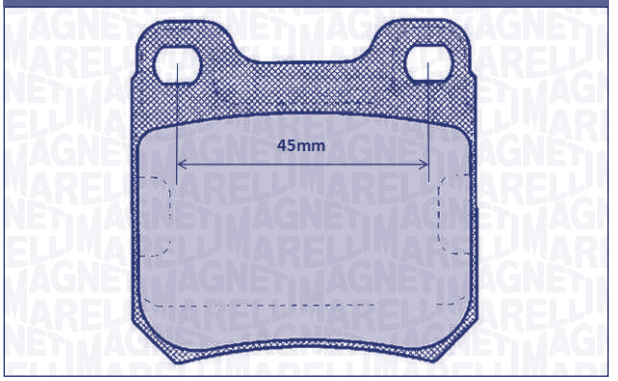

F/R	WVA	W×H×Th (mm)	SiS	Nr. Pz	W.i.	i	Extra kit [Opt]
R	21050 23091	61,5×61×15	ATE	4x	[-]	interasse 45mm / enteraxle 45mm	

OPEL	
Omega A	86 →
Senator A	83 →
Senator B	86 →
Vectra B	95 →
SAAB	
900	93 →
9000	88 →
9-5 BN / SW (YS3E)	97 →
VAUXHALL	
Carlton II	87 →

PF0369

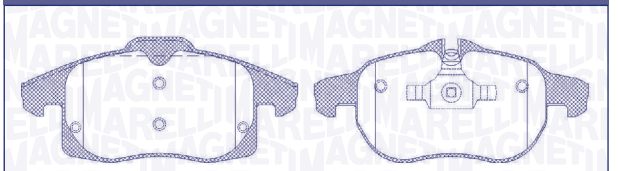

F/R	WVA	W×H×Th (mm)	SiS	Nr. Pz	W.i.	i	Extra kit [Opt]
F	23738 24155	155,2×69×20,2 156,4×71,1×20,2	ATE	2x 2x	[o]	Tel. Nr. 61000001	

OPEL	
Signum Tel.61000001 →	06/03 →
Vectra C Tel.61000001 →	08/02 →
Vectra SW C Tel.61000001 →	03 →
Vectra GTS C Tel.61000001 →	08/02 →
VAUXHALL	
Signum Tel.61000001 →	06/03 →
Vectra C Tel.61000001 →	08/02 →
Vectra SW C Tel.61000001 →	03 →
Vectra GTS C Tel.61000001 →	08/02 →

PF0370

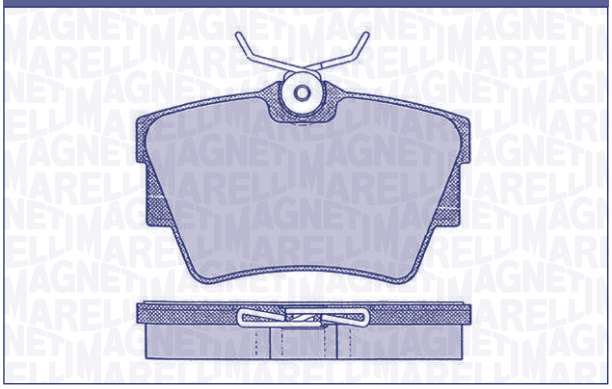

F/R	WVA	W×H×Th (mm)	SiS	Nr. Pz	W.i.	i	Extra kit [Opt]
R	23980	94,9×57,4×17	LG	4x	[-]	–	OK032

NISSAN	
Interstar	07/02→
Primastar	03/01→
OPEL	
Vivaro	01→
RENAULT	
Avantime	01→
Espace III (JE)	98→
Trafic II (JL)	03/01→

PF0371

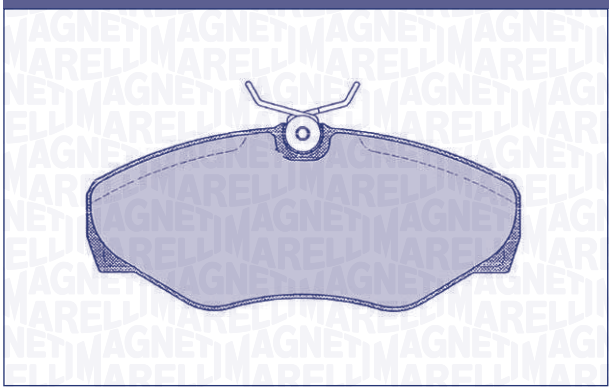

F/R	WVA	W×H×Th (mm)	SiS	Nr. Pz	W.i.	i	Extra kit [Opt]
F	23098 23099	145,1×62,5×18,2	LG	4x	[-]	–	OK012

NISSAN	
Interstar	07/02→
Primastar	03/01→
OPEL	
Vivaro	01→
RENAULT	
Avantime	01→
Espace III (JE)	98→
Trafic II (JL)	03/01→

PF0372

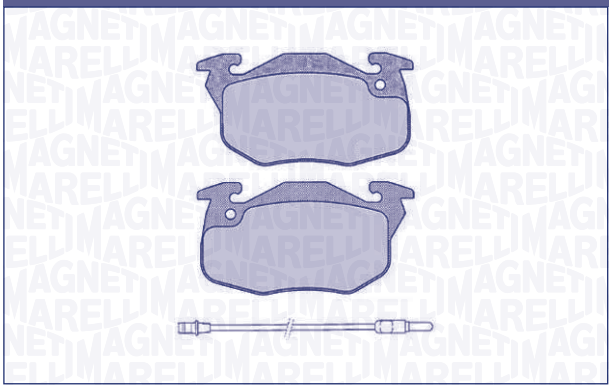

F/R	WVA	W×H×Th (mm)	SiS	Nr. Pz	W.i.	i	Extra kit [Opt]
F	20905 20986	105×54,3×18	BD	2x 2x	2x	w.i. L=205mm	

CITROËN	
Saxo	96→
PEUGEOT	
205	87→
205 Multi Van	85→
309	85→
405	87→
RENAULT	
R 5 Super	85→
R 5 Super Van	86→
R 9	81→
R 11	83→
R 18	82→
R 19	88→
R 19 Van	88→
R 20	80→
R 21	88→
Clio	90→
Clio Van	91→
Espace	84→
Fuego	82→
Express Van	95→
Rapid Van	95→

PF0373

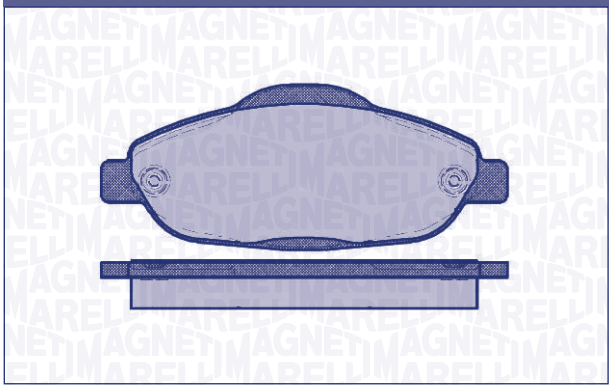

F/R	WVA	W×H×Th (mm)	SiS	Nr. Pz	W.i.	i	Extra kit [Opt]
F	24660	151×61,6×18	BSC	4x	[-]	–	OK012/ OK079

PEUGEOT	
308	07 →
308 II	09/13 →
3008	06/09 →
5008	09/09 →

PF0374

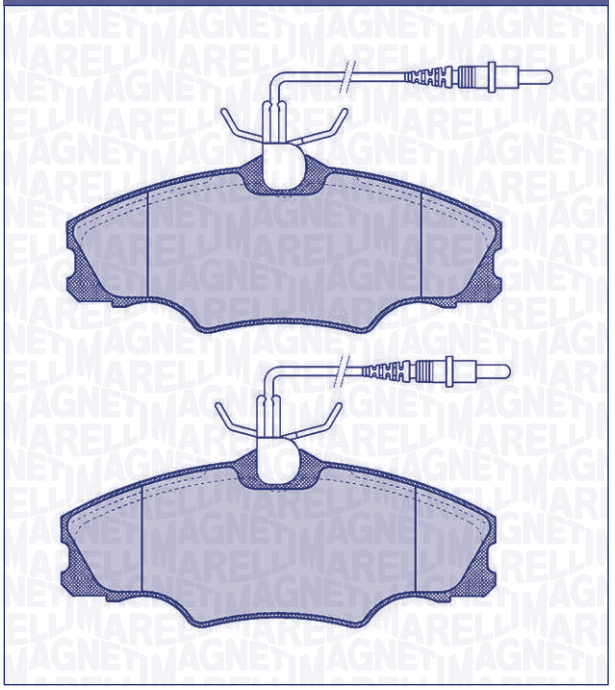

F/R	WVA	W×H×Th (mm)	SiS	Nr. Pz	W.i.	i	Extra kit [Opt]
F	21724 21749	130×53×19	LG	2x 2x	4x	w.i. L=2×260/ 2×290mm	OK030

PEUGEOT	
406	96 →

PF0375

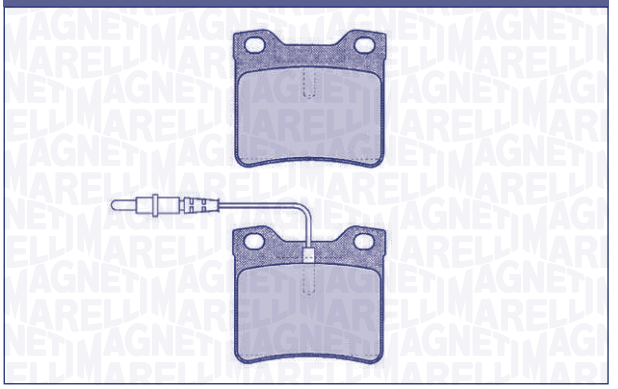

F/R	WVA	W×H×Th (mm)	SiS	Nr. Pz	W.i.	i	Extra kit [Opt]
R	21278 21279	63,8×57,6×17	ATE	2x 2x	2x	w.i. L=155mm	

PEUGEOT	
406	95 →
406 Coupe	99 →
605	90 →

PF0376

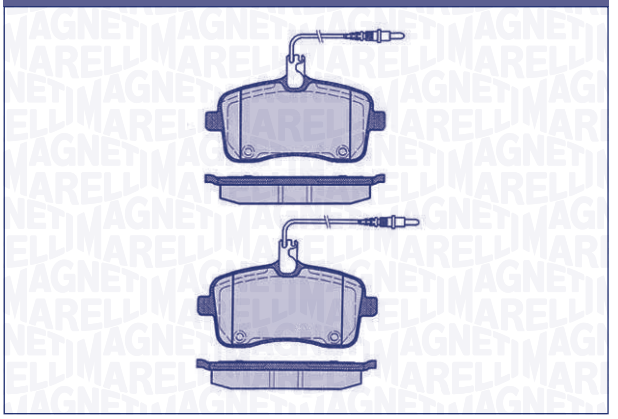

F/R	WVA	W×H×Th (mm)	SiS	Nr. Pz	W.i.	i	Extra kit [Opt]
F	24134 24175	131,4×66,8×19,4	LG	2x 2x	4x	w.i. L=2×320/ 2×360mm	OK030/ OK077

PEUGEOT	
407	04 →
407 Coupé (6C)	05 →

PF0377

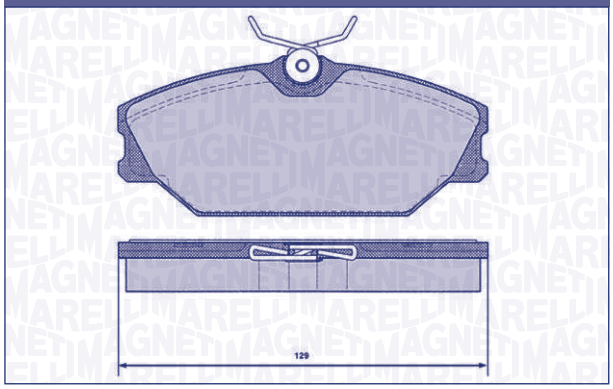

F/R	WVA	W×H×Th (mm)	SiS	Nr. Pz	W.i.	i	Extra kit [Opt]
F	23172 23173	129×55,6×18	LG	4x	[-]	–	OK032

RENALT	
Clio II 2.0i 16V	02/00 →
Clio III 2.0i 16V (BO)	01 →
Laguna	05/99 →
Megane	03/99 →
Megane Van (+ABS)	02/00 →
Megane Classic (LA)	01 →
Megane Cabrio (EA) (+ABS)	04/99 →
Megane Coach (DA) (+ABS)	04/99 →
Megane Scenic (JA) (+ABS)	05/99 →
Safrane (B5)	03/99 →

PF0378

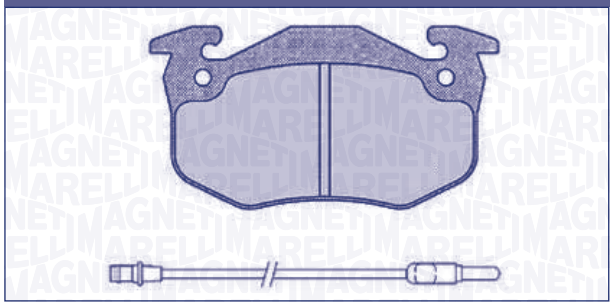

F/R	WVA	W×H×Th (mm)	SiS	Nr. Pz	W.i.	i	Extra kit [Opt]
F	20634 21096 21097	105×55×15	BD	4x	2x	w.i. L=205mm	

RENALT	
R 5 Super	85 →
R 5 Super Van	86 →
Clio RN	90 →
Express Van	85 →
Rapid Van	85 →
Twingo I (S06)	93 →
Twingo Furgonato (S06)	03/93 →

PF0380

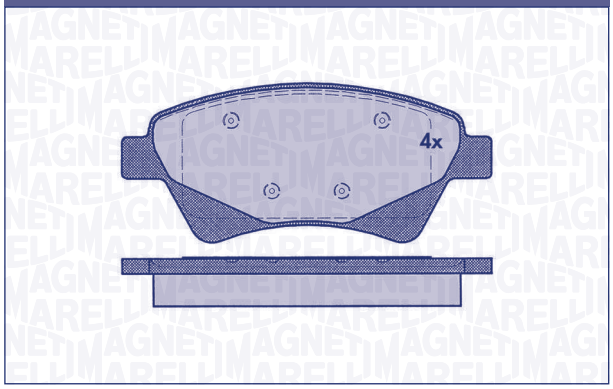

F/R	WVA	W×H×Th (mm)	SiS	Nr. Pz	W.i.	i	Extra kit [Opt]
F	23930 24065	136,8×59,2×18,1	BSC	4x	[-]	–	OK012/ OK038

RENALT	
Kangoo II (FC)	01/02 →
Megane II	12/02 →
Megane II SW	12/02 →
Megane CC II (EM)	08/03 →
Megane Scenic II (JM)	07/03 →
Gran Scenic II	04 →

PF0381

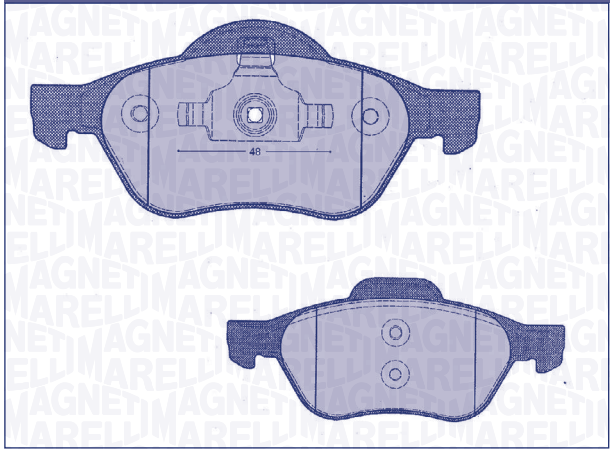

F/R	WVA	W×H×Th (mm)	SiS	Nr. Pz	W.i.	i	Extra kit [Opt]
F	23215 23216 24535	155,2×66,5×18,0 156,5×68,9×18,0	ATE	2x 2x	[-]	–	

RENALT	
Laguna III	01 →
Megane II (BM)	02 →
Megane 3 Volumi (LM)	03 →
Megane SW II (KM)	10/03 →
Wind	07/10 →

PF0382

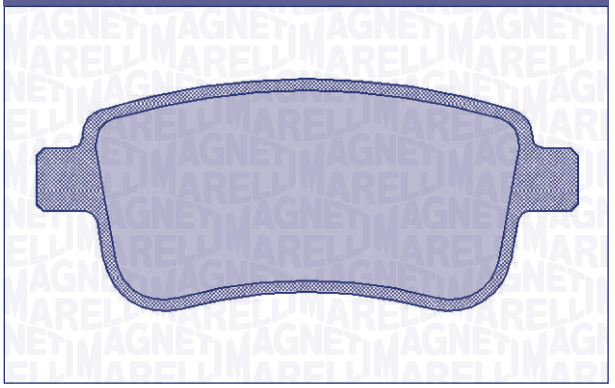

F/R	WVA	W×H×Th (mm)	SiS	Nr. Pz	W.i.	i	Extra kit [Opt]
R	24820	106,1×45,5×16	LG	4x	[-]	–	OK039/ OK080

RENAULT	
Megane III	01/09 →
Megane II CC	06/10 →

PF0384

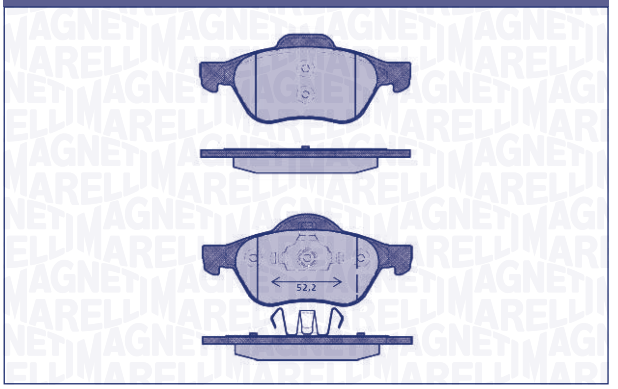

F/R	WVA	W×H×Th (mm)	SiS	Nr. Pz	W.i.	i	Extra kit [Opt]
F	23215 23216 23217	155,2×66,5×18,0 156,5×68,9×18,0	ATE	2x 2x	[-]	–	

RENAULT	
Laguna IV	10/07 →

PF0383

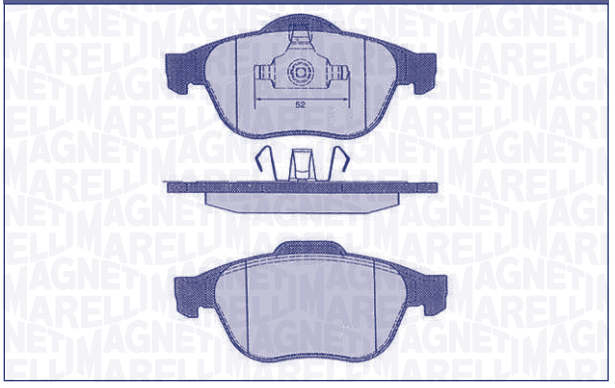

F/R	WVA	W×H×Th (mm)	SiS	Nr. Pz	W.i.	i	Extra kit [Opt]
F	23245 23247	155,2×68,5×18,2 156,5×71×18,2	ATE	2x 2x	[-]	–	OK087

RENAULT	
Laguna III	01 →

PF0385

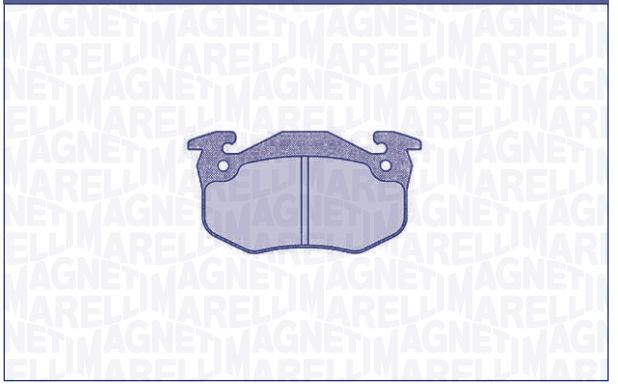

F/R	WVA	W×H×Th (mm)	SiS	Nr. Pz	W.i.	i	Extra kit [Opt]
F	21829 23116 23117	156,4×74,2×20	ATE	1x 1x 1x 1x	2x	–	

RENAULT	
Twingo I (C06_)	93 → 98
Twingo Furgonato (S06)	93 → 98

PF0386

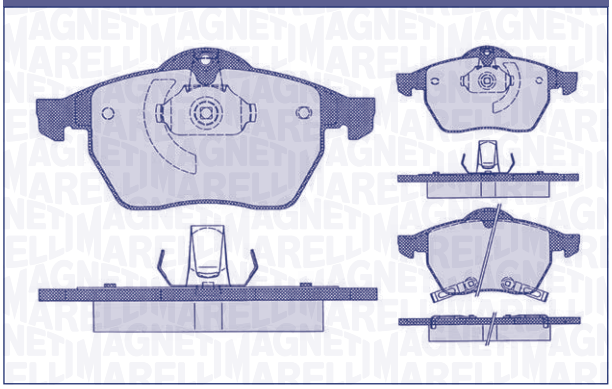

F/R	WVA	W×H×Th (mm)	SiS	Nr. Pz	W.i.	i	Extra kit [Opt]
F	21829 23116 23117	156,4×74,2×20	ATE	1x 1x 1x 1x	2x	–	

OPEL	
Astra G OPC	00 →
Zafira OPC	11/02 →
SAAB	
900	98 →

PF0388

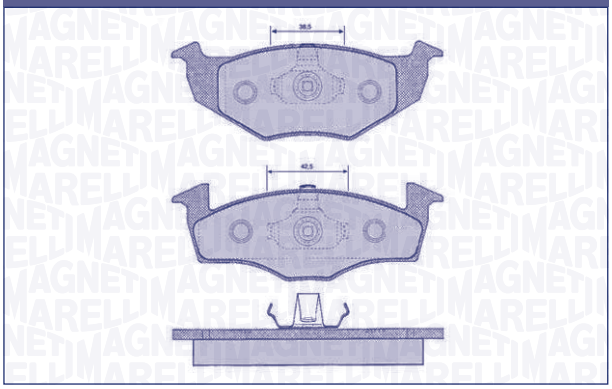

F/R	WVA	W×H×Th (mm)	SiS	Nr. Pz	W.i.	i	Extra kit [Opt]
F	21866 21868	137,8×49×17 137,8×51,2×17	ATE	2x 2x	[-]	–	

SEAT	
Arosa	97 →
SKODA	
Fabia SW (6Y)	07/01 →
VOLKSWAGEN	
Fox	06/05 →
Lupo	97 →
Polo III	95 →
Vento	95 →

PF0389

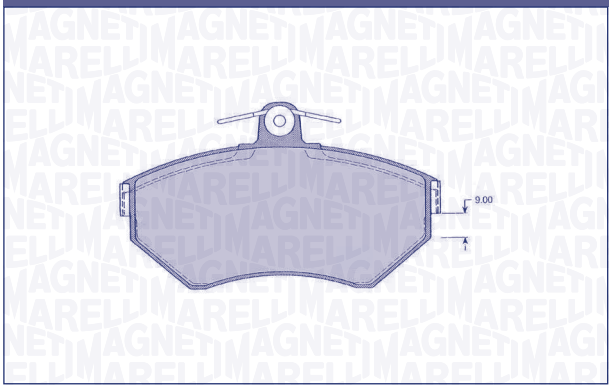

F/R	WVA	W×H×Th (mm)	SiS	Nr. Pz	W.i.	i	Extra kit [Opt]
F	21945	119×69,5×16	LG	4x	[-]	–	OK032

SEAT	
Cordoba	96 →
Ibiza	96 →
Inca	99 →
Toledo	95 →
VOLKSWAGEN	
Caddy II (9K)	95 →
Golf III	95 →
Golf IV Cabrio	96 →
Lupo	99 →
New Beetle	98 →
Polo variant	95 →

PF0390

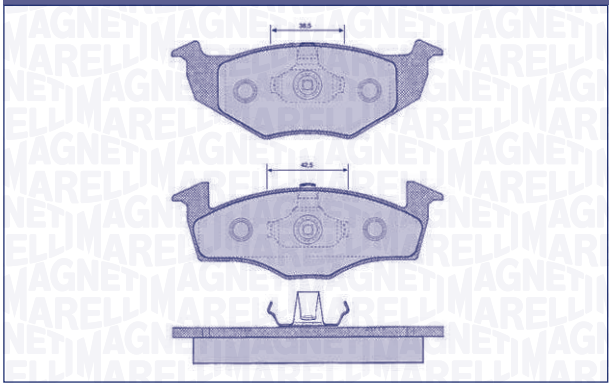

F/R	WVA	W×H×Th (mm)	SiS	Nr. Pz	W.i.	i	Extra kit [Opt]
F	21866 21868	137,8×49×19,5 137,8×51,2×19,5	ATE	2x 2x	[-]	–	

SEAT	
Cordoba	95 →
Codoba Vario	96 →
Toledo	95 →
VOLKSWAGEN	
Golf III	95 →
Vento	95 →

PF0391

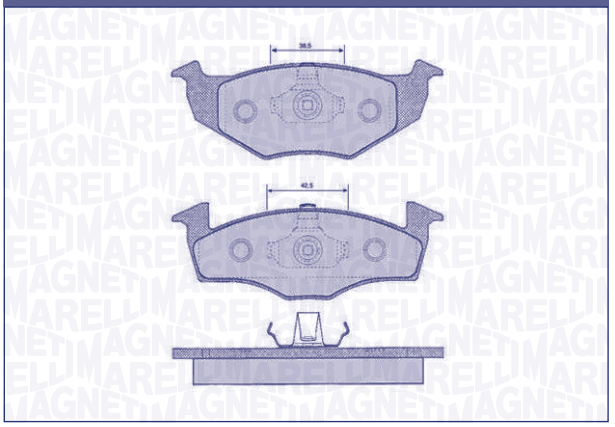

F/R	WVA	W×H×Th (mm)	SiS	Nr. Pz	W.i.	i	Extra kit [Opt]
F	21866 21868	137,8×49×15 137,8×51,2×15	ATE	2x 2x	[-]	–	

SEAT	
Cordoba	99 →
Codoba Vario	96 →
Ibiza	99 →
Toledo	95 →
VOLKSWAGEN	
Polo III Classic	97 →
Polo variant	95 →

PF0392

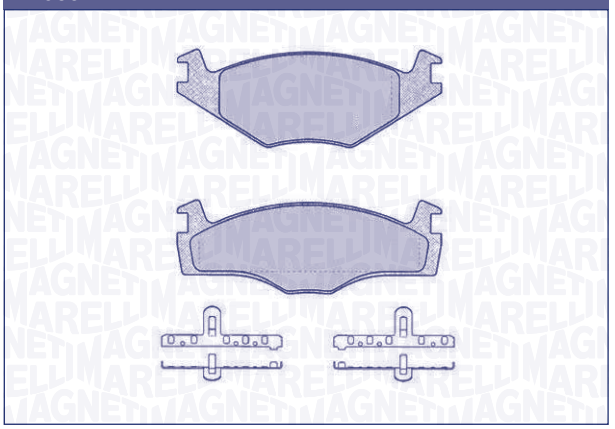

F/R	WVA	W×H×Th (mm)	SiS	Nr. Pz	W.i.	i	Extra kit [Opt]
F	20887 20888	138×49×19,5 138×51,2×19,5	KH	2x 2x	[-]	Kit molle / Kit springs	

SEAT	
Cordoba	93 →
Ibiza	93 →
Toledo	91 →

PF0392

VOLKSWAGEN	
Caddy	83 →
Golf II	83 →
Golf III	91 →
Jetta	83 →
Passat	82 →
Santana	83 →
Scirocco	83 →
Vento	92 →

PF0393

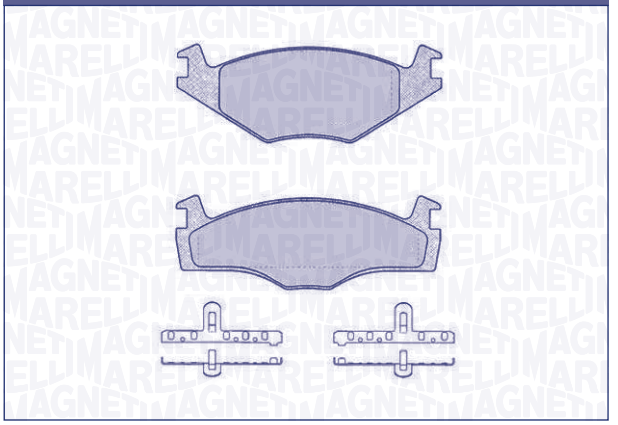

F/R	WVA	W×H×Th (mm)	SiS	Nr. Pz	W.i.	i	Extra kit [Opt]
F	20887 20888	138×49×17,3 138×51,2×17,3	KH	2x 2x	[-]	Kit molle / Kit springs	

SEAT	
Cordoba Dream	96 →
VOLKSWAGEN	
Polo III	94 →

PF0394

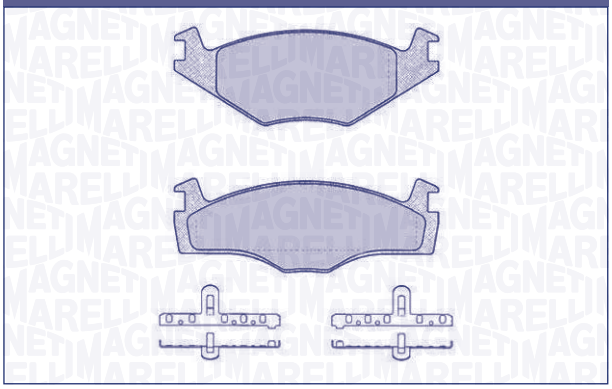

F/R	WVA	W×H×Th (mm)	SiS	Nr. Pz	W.i.	i	Extra kit [Opt]
F	20887 20888	138×49×15 138×51,2×15	KH	2x 2x	[-]	Kit molle / Kit springs	

VOLKSWAGEN	
Golf II	83 →
Jetta GT	83 →
Passat	78 →
Polo I G40 Coupé	86 →
Scirocco	83 →

PF0395

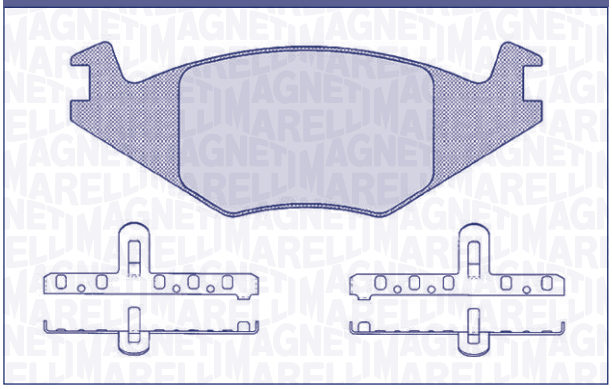

F/R	WVA	W×H×Th (mm)	SiS	Nr. Pz	W.i.	i	Extra kit [Opt]
F	20889	138×51,2×17,2	KH	4x	[-]	Kit molle / Kit springs	

SEAT	
Cordoba	93 →
Ibiza	93 →
VOLKSWAGEN	
Derby	84 →
Golf II	83 →
Jetta	83 →
Polo I	84 →
Polo II	90 →

PF0396

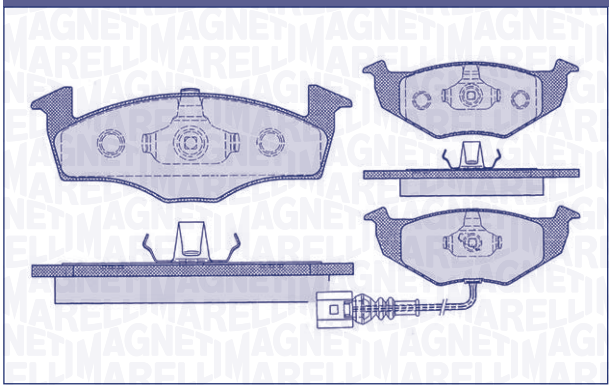

F/R	WVA	W×H×Th (mm)	SiS	Nr. Pz	W.i.	i	Extra kit [Opt]
F	21866 21868 23752	137,8×49×17 137,8×51,2×17	ATE	2x 1x 1x	1x	w.i. L=200mm	

SKODA	
Fabia II (6Y)	02 →
Fabia SW (6Y)	07/01 →
Fabia Praktik	05/03 →
VOLKSWAGEN	
Polo IV (9N)	01 →
Polo Limousine (9N)	07/03 →

PF0397

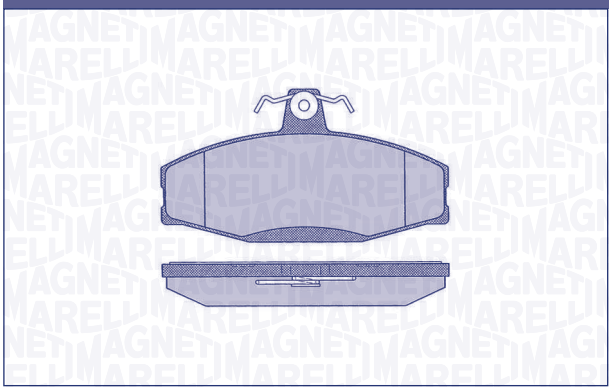

F/R	WVA	W×H×Th (mm)	SiS	Nr. Pz	W.i.	i	Extra kit [Opt]
F	21662	114,9×61×17,5	LG	4x	[-]	–	OK032

SKODA	
Favorit	93 →
Felicia I	94 →
Felicia Combi	95 →
Felicia Van	95 →
Felicia II	03/98 →
Forman	93 →

PF0398

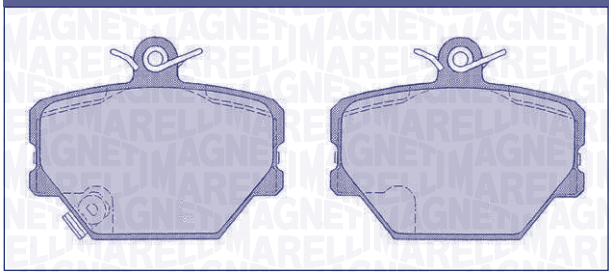

F/R	WVA	W×H×Th (mm)	SiS	Nr. Pz	W.i.	i	Extra kit [Opt]
F	21998 21999 23002	90×70×15,5	BSC	2x 2x	2x	–	OK012

MCC (MERCEDES)	
Smart fortwo	04 →
Smart (MC1)	07/98 →
Smart Cabrio	03/00 →
Smart CrossBlade	04/03 →
Smart RoadSter	04/03 →
Smart RoadSter Cabrio	04/03 →

PF0399

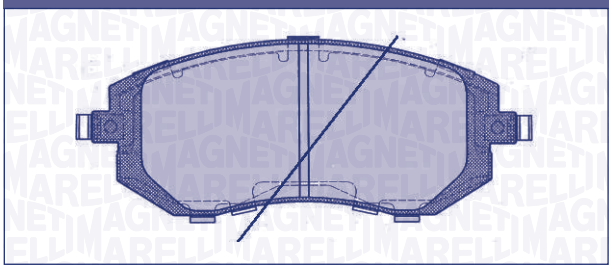

F/R	WVA	W×H×Th (mm)	SiS	Nr. Pz	W.i.	i	Extra kit [Opt]
F	23865 23866 23867	137×56,8×17,5	TOK	2x 2x	2x	–	

SUBARU	
BRZ	06/12 →
Forester (SG)	02 →
Forester III (SH)	01/08 →
Forester IV (SJ)	03/13 →
Impreza (GD,GG)	11/01 →
Impreza SW (GD)	12/00 →
Impreza II (GF)	10/05 →
Impreza SW II (GF)	10/05 →
Impreza III BN	08 →
Legacy III (BE,BH)	98 →
Legacy III Autback	00 →
Legacy IV	03 →
Outback III (BL_BP)	03 →
XV	03/12 →

PF0400

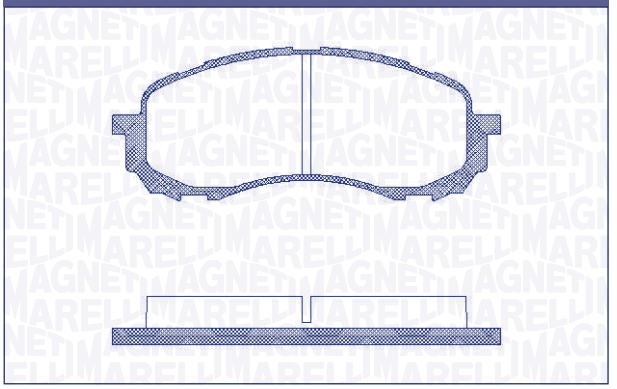

F/R	WVA	W×H×Th (mm)	SiS	Nr. Pz	W.i.	i	Extra kit [Opt]
F	24372	137×54×16,8	AK	4x	2x	–	

SUBARU	
Impreza III BN/SW	08 →

PF0401

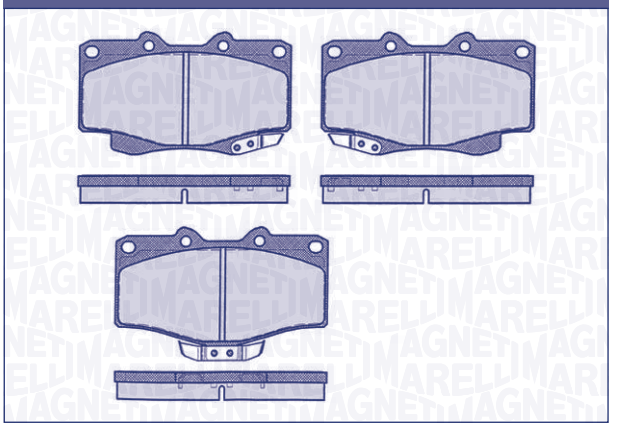

F/R	WVA	W×H×Th (mm)	SiS	Nr. Pz	W.i.	i	Extra kit [Opt]
F	21680 21681	119,2×68×15,0 119,2×73,5×15,0	ST	2x 1x 1x	4x	4 antirumore in confezione / 4 antinoise in the box	

TOYOTA	
4 Runner (N13)	87 →
Land Cruiser 70 (J7)	11/88 →
Land Cruiser 80 (J8)	90 →
Land Cruiser 90 (J9)	04/96 →

PF0402

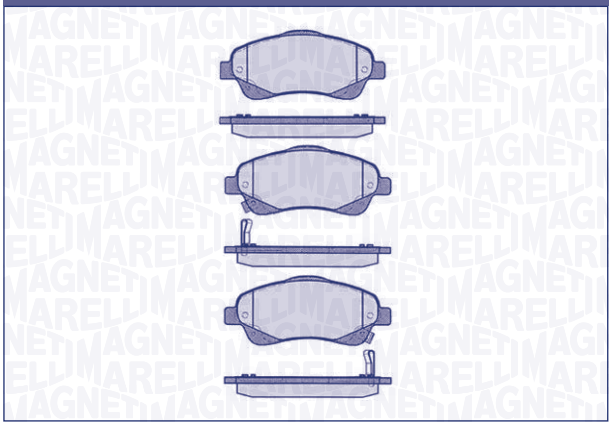

F/R	WVA	W×H×Th (mm)	SiS	Nr. Pz	W.i.	i	Extra kit [Opt]
F	23479 23480 23768	150,8×63,1×18,7	BSC	2x 1x 1x	2x	–	OK038

TOYOTA	
Avensis II (T25)	04/03 →
Corolla MPV II	04/04 →

PF0403

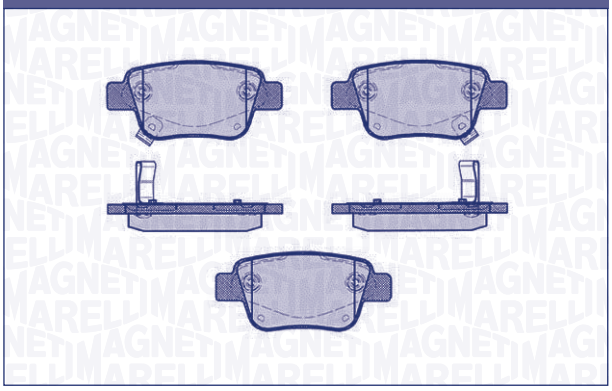

F/R	WVA	W×H×Th (mm)	SiS	Nr. Pz	W.i.	i	Extra kit [Opt]
R	23620 23621 23622	101,8×46,1×16,3	BSC	2x 1x 1x	2x	–	OK040

TOYOTA	
Avensis II (T25)	04/03 →
Corolla MPV II	04/04 →

PF0404

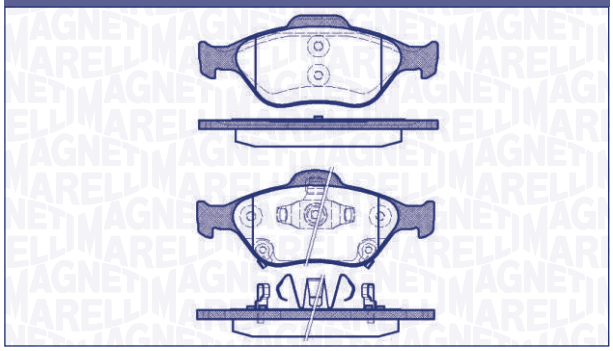

F/R	WVA	W×H×Th (mm)	SiS	Nr. Pz	W.i.	i	Extra kit [Opt]
F	24022 24023	150,3×58×17,5 151,5×61×17,5	ATE	2x 1x 1x	2x	–	

TOYOTA	
Yaris II (P9) [Made in France]	06 →
Yaris III (P13) [Made in France]	09/11 →

PF0405

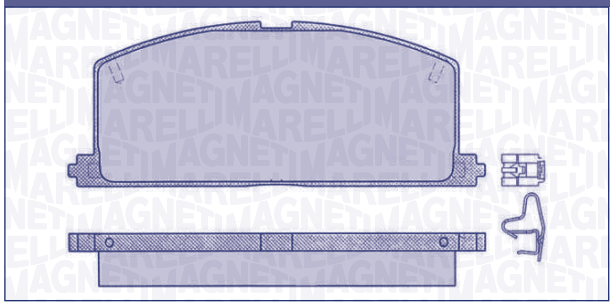

F/R	WVA	W×H×Th (mm)	SiS	Nr. Pz	W.i.	i	Extra kit [Opt]
F	20870	119,7×47,5×15	AK	4x	4x	4 segnalatori acustici / 4 acoustic sensor	

GEO	
Prizm	89 →
HOLDEN	
Apollo	94 →
TOYOTA	
Camry	83 →
Camry II	88 →
Carina II	83 →
Celica	86 →
Corolla	83 →
Corona	83 →
Cynos	91 →
MR2	85 →
Paseo	93 →
Starlet	90 →
Tercel	82 →

PF0406

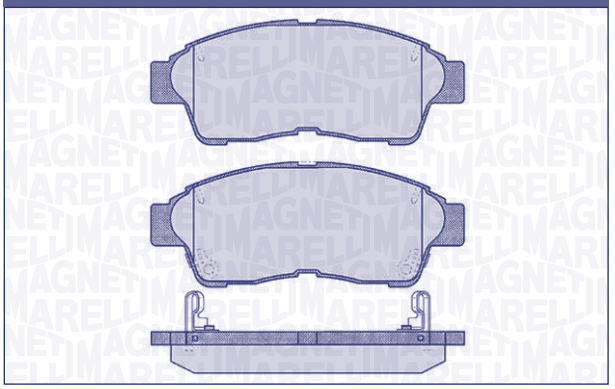

F/R	WVA	W×H×Th (mm)	SiS	Nr. Pz	W.i.	i	Extra kit [Opt]
F	21601 21602 21603	133,2×53×17,5	AK	2x 1x 1x	2x	–	

GEO	
Prizm	93→
Storm	91→
TOYOTA	
Camry III	91→
Carina E	92→
Celica (AT2)	93→
Corolla	92→
Corona	92→
Curren	94→
Picnic	96→
Rav4	94→
Scepter	92→
Sprinter	92→
Tercel	93→

PF0407

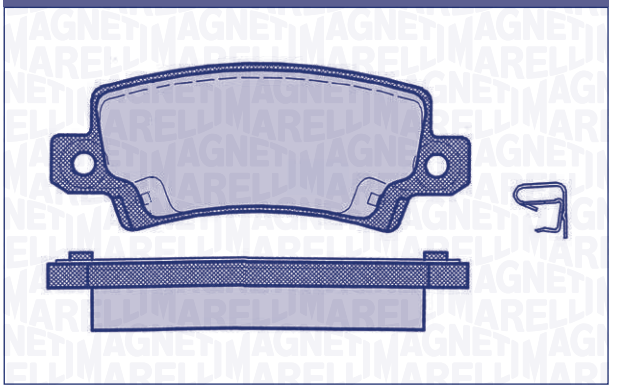

F/R	WVA	W×H×Th (mm)	SiS	Nr. Pz	W.i.	i	Extra kit [Opt]
R	23816	95,62×37,7×15,8	LG	4x	2x	2 segnalatori acustici / 2 acoustic sensors	

TOYOTA	
Corolla (E12U)	01/02→
Corolla SW (E12)	08/02→
Corolla MPV (E12J)	01/02→

PF0408

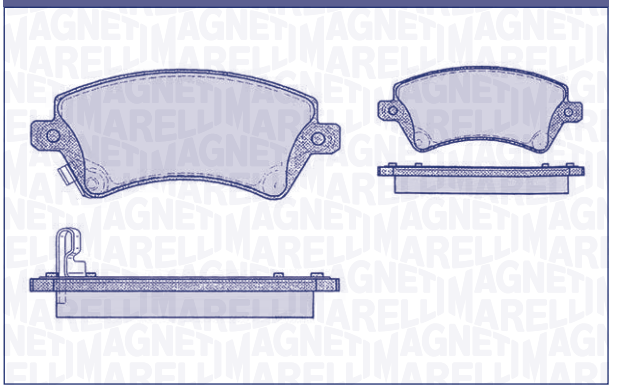

F/R	WVA	W×H×Th (mm)	SiS	Nr. Pz	W.i.	i	Extra kit [Opt]
F	23766 23767 23818 23819	131,6×57,3×17,5	LG	2x 1x 1x	2x	–	

TOYOTA	
Corolla (E12U)	01/02→
Corolla SW (E12)	08/02→

PF0409

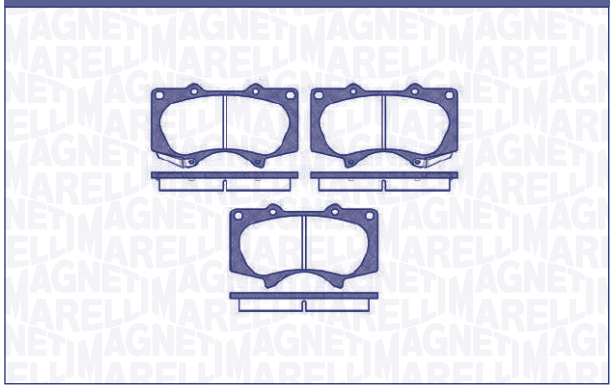

F/R	WVA	W×H×Th (mm)	SiS	Nr. Pz	W.i.	i	Extra kit [Opt]
F	24024 24025 24026	134,6×77,1×17	ST	2x 1x 1x	2x	4 antirumore in confezione / 4 antinoise in the box	

MITSUBISHI	
Pajero IV (V80-V90)	02/07→
TOYOTA	
Land Cruiser (J12)	01/03→

PF0410

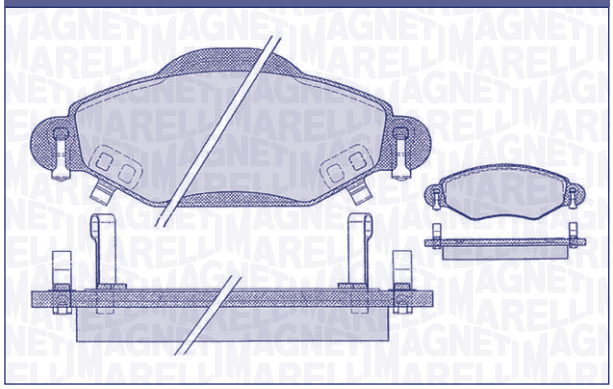

F/R	WVA	W×H×Th (mm)	SiS	Nr. Pz	W.i.	i	Extra kit [Opt]
F	23340 23341 23342 23958	130,9×44,9×16,7 130,9×51,1×16,7	BSC	2x 1x 1x	2x	–	

TOYOTA	
Yaris (SCP10)	01/01→
Yaris (NCP12)	01/01→
Yaris (NLP)	12/01→
Yaris Verso (NLP)	12/01→

PF0411

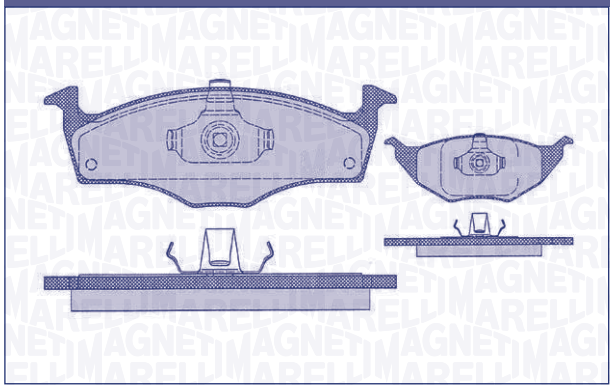

F/R	WVA	W×H×Th (mm)	SiS	Nr. Pz	W.i.	i	Extra kit [Opt]
F	23394 23395	141,8×48,1×14,3 141,8×49,8×14,3	ATE	2x 2x	[-]	–	

SEAT	
Arosa	01→
VOLKSWAGEN	
Lupo	00→

PF0412

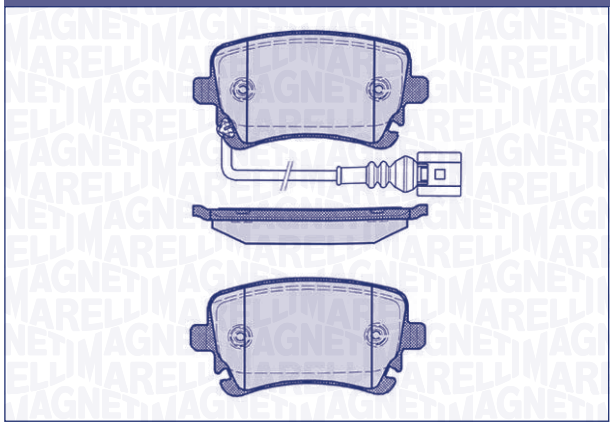

F/R	WVA	W×H×Th (mm)	SiS	Nr. Pz	W.i.	i	Extra kit [Opt]
R	23882	116,2×59×17,5	LG	4x	1x	w.i. L=170mm	OK033/ OK091

VOLKSWAGEN	
T5 (7H)	04/03→

PF0413

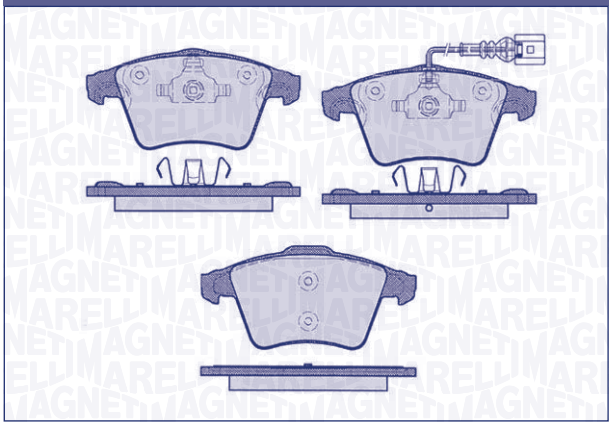

F/R	WVA	W×H×Th (mm)	SiS	Nr. Pz	W.i.	i	Extra kit [Opt]
F	23467 23469 23747	155,2×73,5×17,9 156,4×74,9×17,9	ATE	2x 1x 1x	1x	w.i. L=190mm	

VOLKSWAGEN	
T5 (ØDisc 333/17")	04/03 →

PF0414

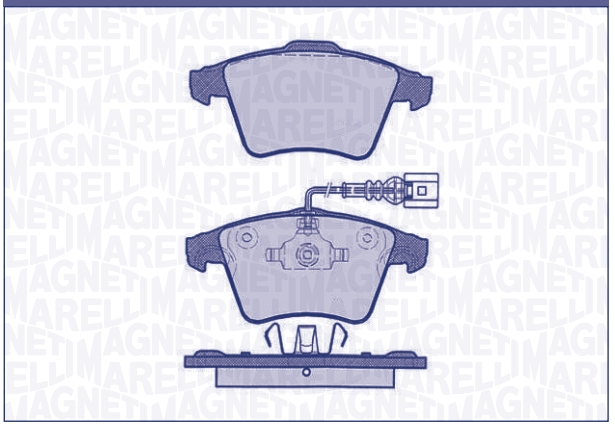

F/R	WVA	W×H×Th (mm)	SiS	Nr. Pz	W.i.	i	Extra kit [Opt]
F	23749 23747 23746	155,2×73,5×17,9 156,4×74,9×20	ATE	2x 1x 1x	2x	w.i. L=190mm	

VOLKSWAGEN	
T5 (ØDisc 308/16")	04/03 →

PF0415

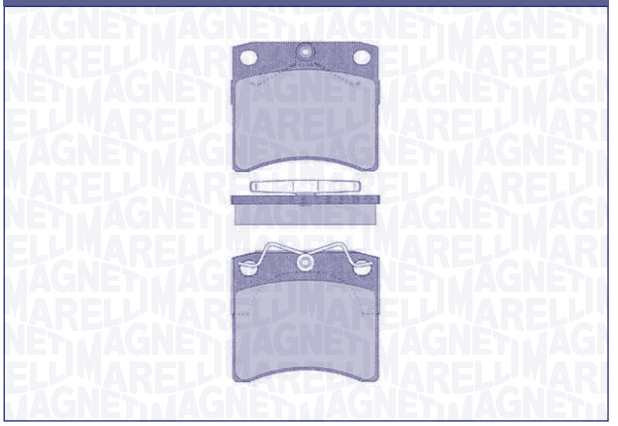

F/R	WVA	W×H×Th (mm)	SiS	Nr. Pz	W.i.	i	Extra kit [Opt]
F	20652 21635	91,6×80×18	LG	2x 2x	[-]	–	

VOLKSWAGEN	
Caravelle Van	95 →
Transporter T4	95 →

PF0416

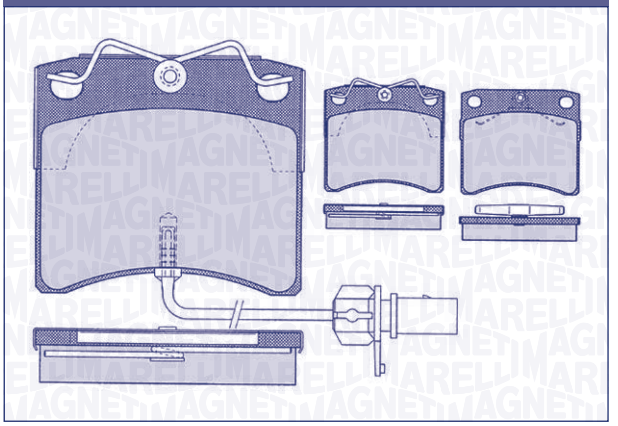

F/R	WVA	W×H×Th (mm)	SiS	Nr. Pz	W.i.	i	Extra kit [Opt]
F	20651 21635 23176	91,6×80×18	LG	2x 1x 1x	1x	w.i. L=210mm	

VOLKSWAGEN	
Transporter T4	98 →

PF0417

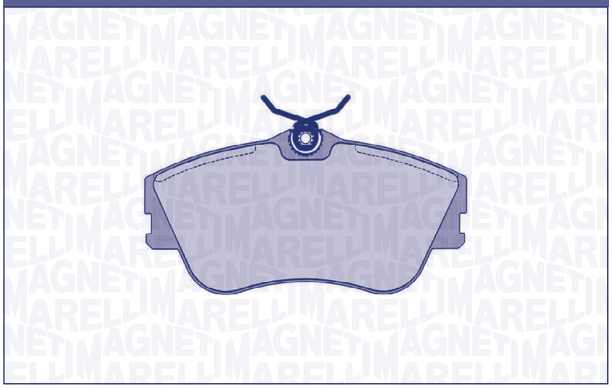

F/R	WVA	W×H×Th (mm)	SiS	Nr. Pz	W.i.	i	Extra kit [Opt]
F	21479	129,9×65,2×19	LG	4x	[-]	–	OK030

VOLKSWAGEN	
Caravelle	96 →
Transporter T4	90 →

PF0418

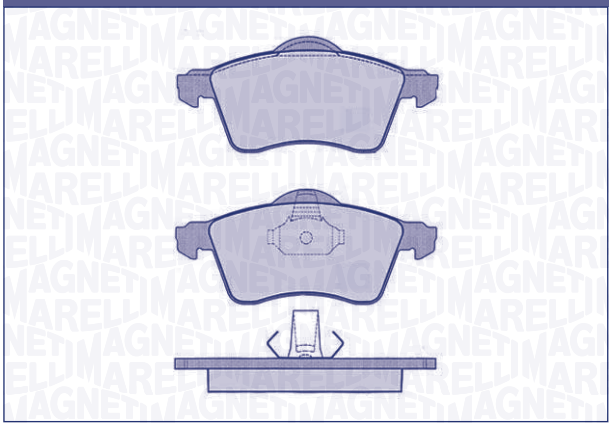

F/R	WVA	W×H×Th (mm)	SiS	Nr. Pz	W.i.	i	Extra kit [Opt]
F	21883 21885	156,5×68,5×19,5	ATE	2x 2x	[-]	–	

VOLKSWAGEN	
Caravelle	90 →
Eurovan T4	90 →
Transporter T4	90 →

PF0419



F/R	WVA	W×H×Th (mm)	SiS	Nr. Pz	W.i.	i	Extra kit [Opt]
F	21884 23162 23163	156,5×68,5×19,5	ATE	2x 1x 1x	1x	w.i. L=210mm	

VOLKSWAGEN	
Caravelle	96 →
Transporter T4	96 →

PF0420

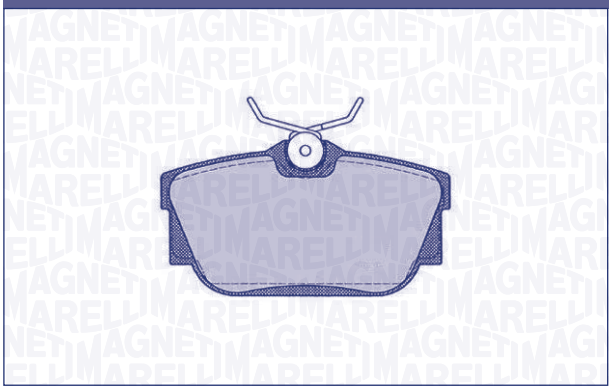

F/R	WVA	W×H×Th (mm)	SiS	Nr. Pz	W.i.	i	Extra kit [Opt]
R	23224	94,9×51×16,8	LG	4x	[-]	–	OK032

VOLKSWAGEN	
Transporter T4	00 →

PF0421

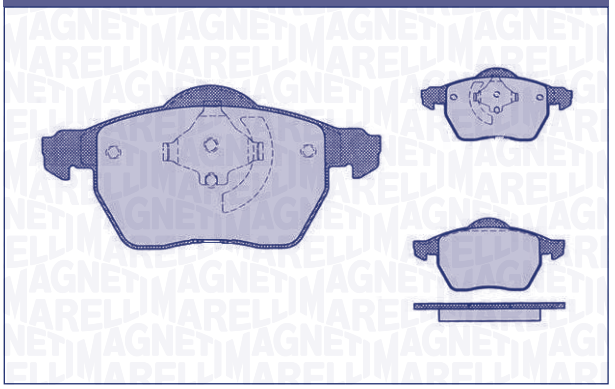

F/R	WVA	W×H×Th (mm)	SiS	Nr. Pz	W.i.	i	Extra kit [Opt]
F	20676 23106 23107	156,4×74,2×19	ATE	2x 1x 1x	[-]	–	

VOLVO	
S 70	97 →
V 70	97 →

PF0422

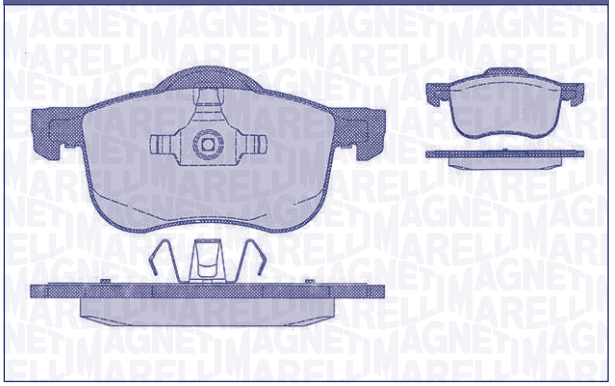

F/R	WVA	W×H×Th (mm)	SiS	Nr. Pz	W.i.	i	Extra kit [Opt]
F	23072 23073 23074	155,4×69×18,5 156,4×72,5×18,5	ATE	2x 2x	[-]	–	

VOLVO	
S 60	11/00 →
S 80	98 →
V 70	00 →
V 70 II	03/00 →
XC70 Cross Country	00 →
XC90	10/02 →

PF0423

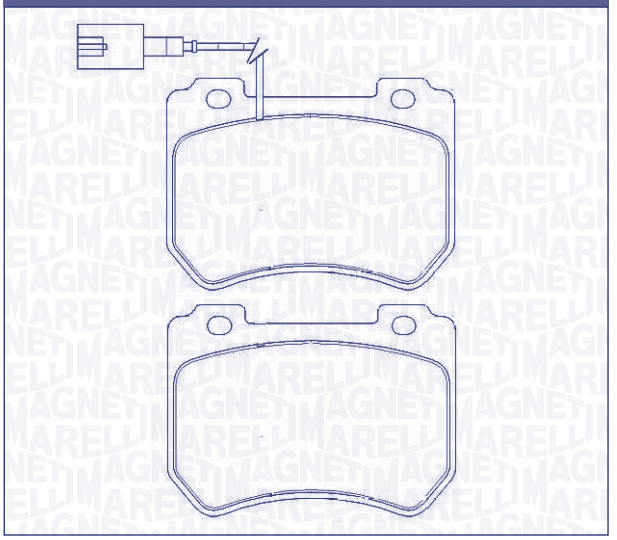

F/R	WVA	W×H×Th (mm)	SiS	Nr. Pz	W.i.	i	Extra kit [Opt]
F	24852 24853 24720	109,9×80,6×15,5	BR	3x 1x	1x	w.i. L=180mm / antirumore in confezione / antinoise in the box	

ALFA ROMEO	
159 MY08 (939)	03/06 →
Spider III	05/09 →

PF0424

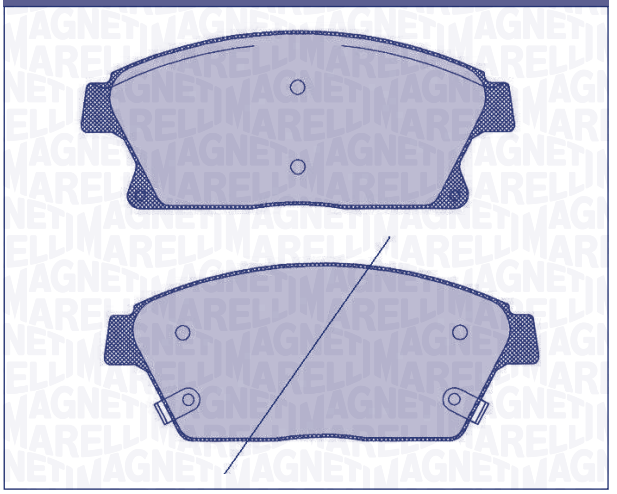

F/R	WVA	W×H×Th (mm)	SiS	Nr. Pz	W.i.	i	Extra kit [Opt]
F	25034 25035 25036	148×61,1×18,8	ATE	2x 1x 1x	2x	–	

CHEVROLET (DAEWOO)	
Cruze (J_)	09 →
Orlando	02/11 →
Trax	12/12 →

PF0424

OPEL	
Astra J	09 →
Astra J GTC	11 →
Astra J 3 Volumi	12 →
Mokka	12/12 →
Zafira (P12) Disc 300	10/11 →
VAUXHALL	
Astra J (MKVI)	09 →
Mokka	12/12 →

PF0425

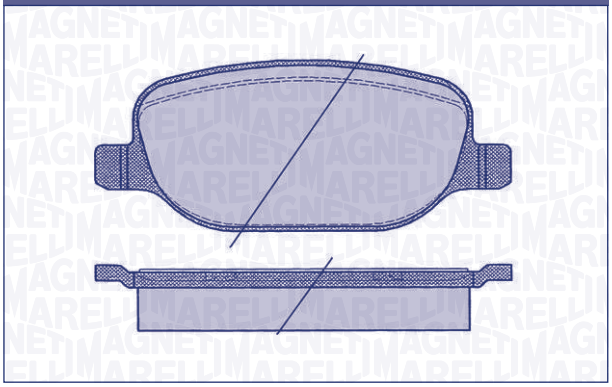

F/R	WVA	W×H×Th (mm)	SiS	Nr. Pz	W.i.	i	Extra kit [Opt]
R	23760 24788	116,7×49,9×17,8	LG	2x 2x	2x	w.i. L=170mm	OK039/ OK091/ OK085

ALFA ROMEO	
Giulietta (940)	10 →

PF0426

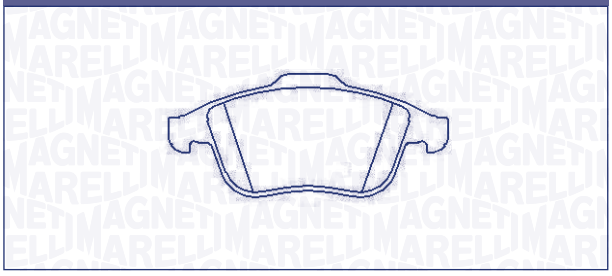

F/R	WVA	W×H×Th (mm)	SiS	Nr. Pz	W.i.	i	Extra kit [Opt]
F	25180 24538	155,3×64,5×19 155,3×59,4×19	ATE	2x 2x	2x	w.i. L=200mm	

ALFA ROMEO	
Giulietta (940)	10 →

PF0427

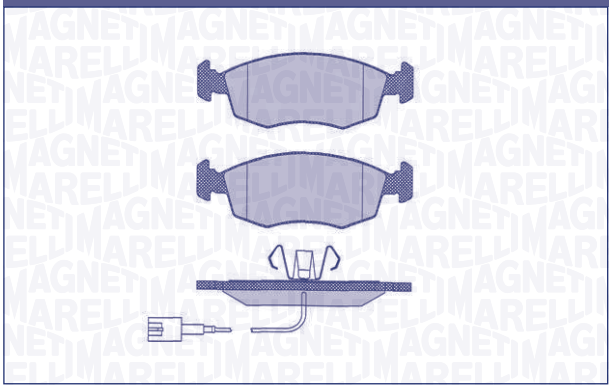

F/R	WVA	W×H×Th (mm)	SiS	Nr. Pz	W.i.	i	Extra kit [Opt]
F	25323 25429 25430	149,3×52,5×17,4	ATE	2x 2x	2x	w.i. L=170mm	

FIAT	
G. Punto Evo (199)	05/10 →
Punto (199)	03/12 →

PF0428

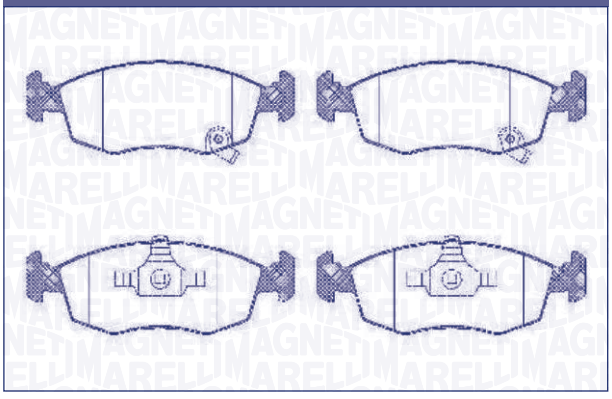

F/R	WVA	W×H×Th (mm)	SiS	Nr. Pz	W.i.	i	Extra kit [Opt]
F	25323 25324 25435	149,3×52,5×17,4	ATE	1x 1x 1x 1x	2x	–	

CHRYSLER	
Ypsilon (846)	11 →
FIAT	
Panda III (312)	12 →
Panda 4x4 III (312)	11/12 →
Panda III Gpl (312)	12 →
LANCIA	
Ypsilon (846)	11 →

PF0429

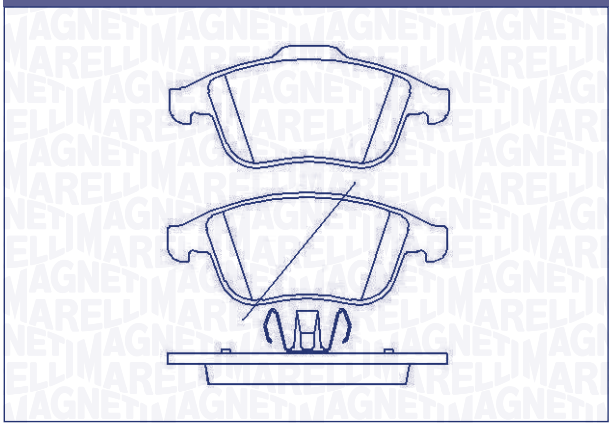

F/R	WVA	W×H×Th (mm)	SiS	Nr. Pz	W.i.	i	Extra kit [Opt]
F	24914	155,3×64,5×17,9 155,3×59,4×17,9	ATE	2x 1x 1x	[-]	–	

DACIA	
Dokker +ESP	12 →
Duster	04/10 →
Lodgy	03/12 →
RENAULT	
Captur	06/13 →
Fluence	10 →
Megane III	01/09 →
Megane CC II	06/10 →
Scenic III	02/09 →
Gran Scenic III (JZ)	02/09 →

PF0430

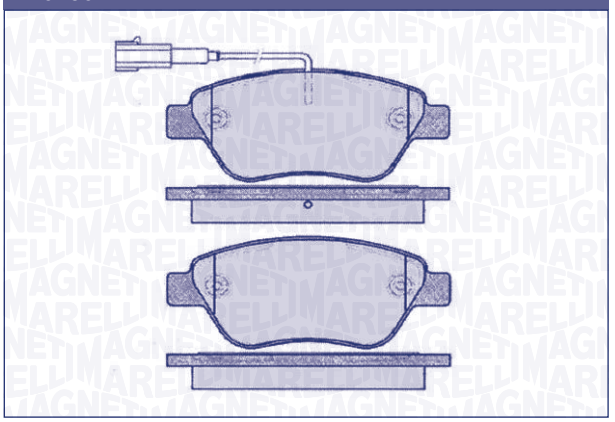

F/R	WVA	W×H×Th (mm)	SiS	Nr. Pz	W.i.	i	Extra kit [Opt]
F	23979 23982	122,9×53,4×18	BSC	3x 1x	1x	w.i. L=210mm	OK012/ OK040

FIAT	
500 100cv	07 →
Fiorino Qubo	08 →
Fiorino II (225)	07 →

PF0431

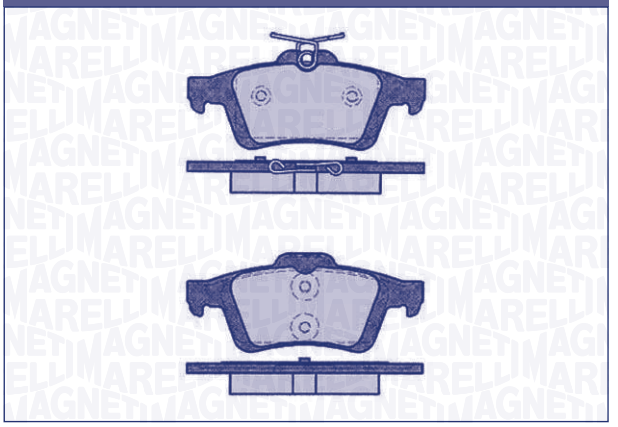

F/R	WVA	W×H×Th (mm)	SiS	Nr. Pz	W.i.	i	Extra kit [Opt]
R	25212 25213	123,1×52×16,4	ATE	2x 2x	[-]	–	

FORD	
C-Max	05/07 →
Focus II	11/04 →
Focus II Coupe	02/05 →
Focus C-Max	05 →
Focus III	08 →
Grand C-Max	12/10 →
Tourneo Connect	13 →
Transit Connect	14 →
Transit Connect	13 →
MAZDA	
3	05 →
3 Tre volumi (BL_)	09 →
5	05 →
OPEL	
GT	06/07 →
Signum	06/03 →
Vectra C	08/02 →
Vectra GTS C	08/02 →
PEUGEOT	
508	11/10 →
508 SW	11/10 →
RENAULT	
Megane II Sport	03/04 →
VOLVO	
C 30	07 →
C 70 II	03/06 →
S 40 II	01/05 →
S 40 II (MS) Polizia	01/05 →
V 50	01/05 →
V 50 (MW) Polizia	01/05 →

PF0432

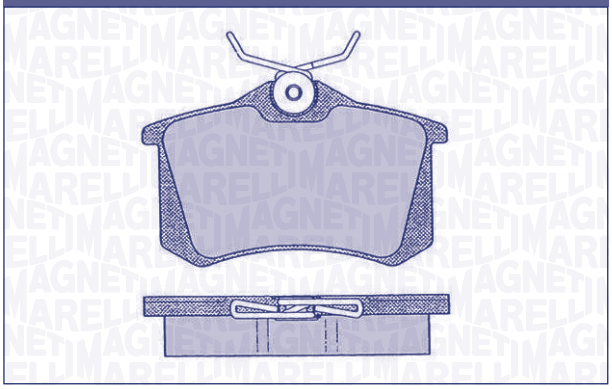

F/R	WVA	W×H×Th (mm)	SiS	Nr. Pz	W.i.	i	Extra kit [Opt]
R	20960	87×53×16	LG	4x	[-]	–	OK039/ OK041

CITROËN	
C4 (B7)	11/09 →
C4 Cactus	14 →
RENAULT	
Avantime	01 →
Clio IV Grandtour	13 →
Megane II	02 →
Megane CC II	08/03 →
Megane Scenic II (JM)	11/03 →

PF0433

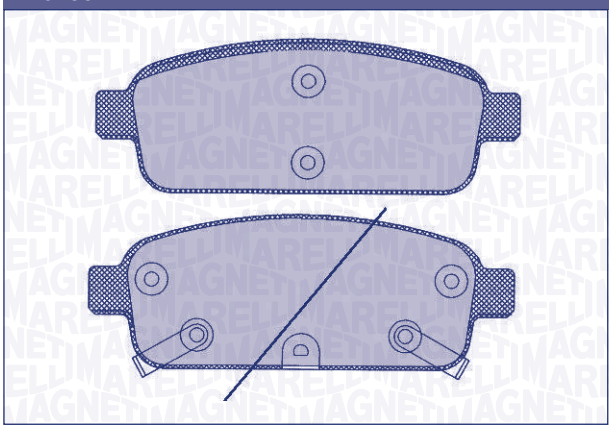

F/R	WVA	W×H×Th (mm)	SiS	Nr. Pz	W.i.	i	Extra kit [Opt]
R	25096 25097 25098	116,6×42,7×16,2	LG	2x 1x 1x	2x	–	

CHEVROLET (DAEWOO)	
Cruze (J_)	09 →
Orlando	02/11 →
Trax	12/12 →

PF0433

OPEL	
Astra J	09 →
Astra J GTC	11 →
Astra J 3 Volumi	12 →
Cascada (W13)	03/13 →
Mokka	12/12 →
VAUXHALL	
Astra J (MKVI)	09 →
Mokka	12/12 →

PF0434

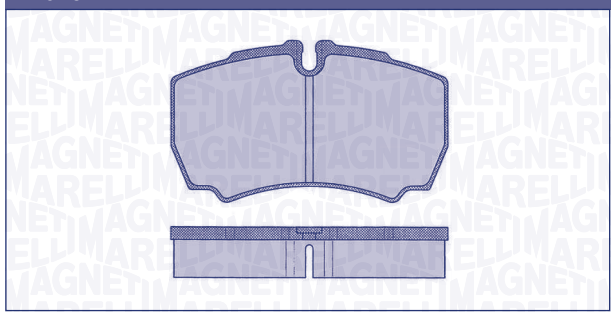

F/R	WVA	W×H×Th (mm)	SiS	Nr. Pz	W.i.	i	Extra kit [Opt]
R	29123	109,5×63,8×20	BR	4x	[o]	–	OK060

IVECO - OM	
Daily II	00 →
Daily II S	05/99 →

PF0439

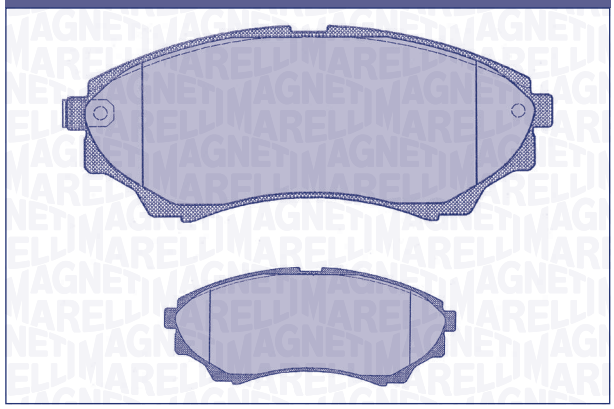

F/R	WVA	W×H×Th (mm)	SiS	Nr. Pz	W.i.	i	Extra kit [Opt]
F	24353 24354	145,1×58,4×14	ST	3x 1x	1x	antirumore in confezione / antinoise in the box	OK093

FORD	
Ranger II (TU)	10/05 →
MAZDA	
BT 50	12/06 →

PF0440

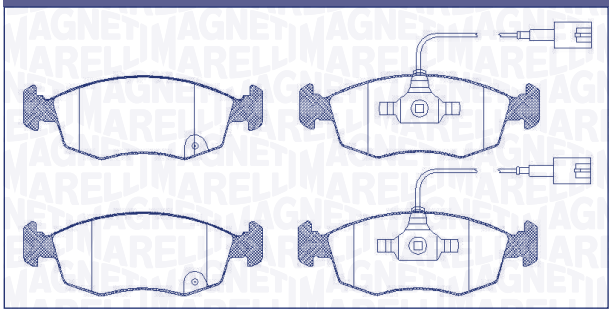

F/R	WVA	W×H×Th (mm)	SiS	Nr. Pz	W.i.	i	Extra kit [Opt]
F	25323 25429 25430	149,3×52,5×17,4	ATE	1x 1x 1x 1x	2x	w.i. L=170mm	

FIAT	
500 (169) 0.9 TwinAir	11→

PF0441

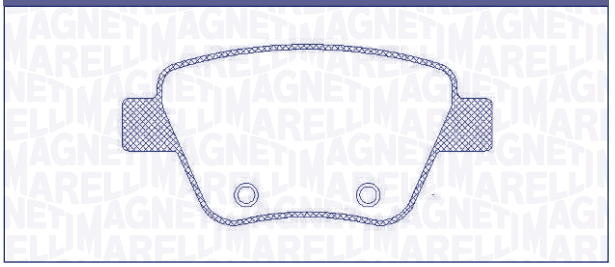

F/R	WVA	W×H×Th (mm)	SiS	Nr. Pz	W.i.	i	Extra kit [Opt]
R	24563	109,2×53,3×17,5	BSC	4x	[-]	–	OK033

AUDI	
A1 (8X1)	10/11→
A1 Sportback (8XA)	11→
A3 (8P1)	09→
A3 Cabriolet	08→
SEAT	
Altea XL	04→
SKODA	
Octavia	04→
Superb (3T4)	08→
Superb SW (3T5)	09→
Jeti (5L)	09→
VOLKSWAGEN	
Beetle	10/11→
Beetle Cabriolet (5C7)	12→
Eos (1F)	07→
Golf VI	08→
Golf VI Cabriolet	08→
Jetta IV (5K)	03/11→
Scirocco (137)	08→
Touran (1T3)	10→

PF0442

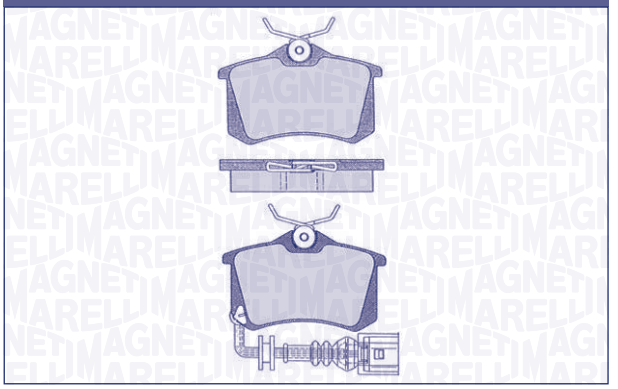

F/R	WVA	W×H×Th (mm)	SiS	Nr. Pz	W.i.	i	Extra kit [Opt]
R	23391 23553 23556 23823	87×53×17	LG	3x 1x	1x	w.i. L=260mm	OK039/ OK041

AUDI	
A 2	00→
A 4/A 4 II (8E)	11/94→
A 4 Cabrio (8H)	07/02→
SEAT	
Ibiza	01→
Ibiza IV (6L1)	02/02→
SKODA	
Fabia I	99→
VOLKSWAGEN	
Polo IV (9N)	01→

PF0443

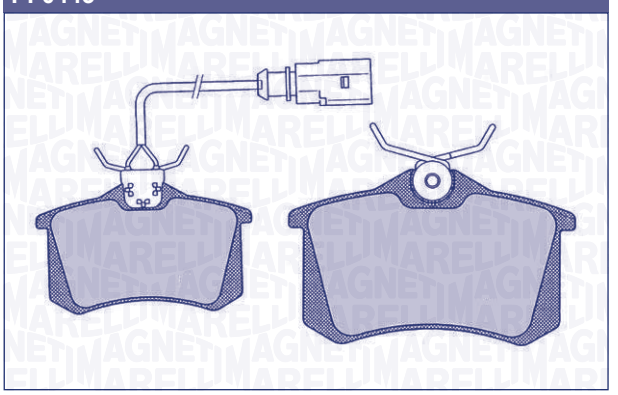

F/R	WVA	W×H×Th (mm)	SiS	Nr. Pz	W.i.	i	Extra kit [Opt]
R	20961 24211	87×53×17	LG	2x 2x	2x	w.i. L=340mm	OK030/ OK041

AUDI	
A 4 RS4 Biturbo	00→
A 3 II (8P)	06/03→

PF0444



F/R	WVA	W×H×Th (mm)	SiS	Nr. Pz	W.i.	i	Extra kit [Opt]
R	23556	87×53×17	LG	4x	[-]	–	OK039/ OK041

AUDI	
A 3 II (8P)	06/03 →
VOLKSWAGEN	
Golf V	11/03 →
Touran (PQ35)	03 →
Touran Cross	07 →

PF0445

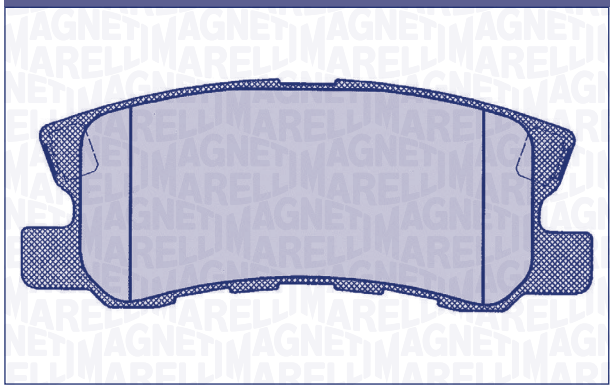

F/R	WVA	W×H×Th (mm)	SiS	Nr. Pz	W.i.	i	Extra kit [Opt]
R	23582	91×44,8 ×15,4 111,5×45×15,4	AK	2x 2x	1x	–	

CHRYSLER	
Sebring II (JS)	07 → 10
Sebring Cabriolet II (JS)	07 → 10
LANCIA	
Flavia Cabriolet (JS)	03/12 →

PF0446

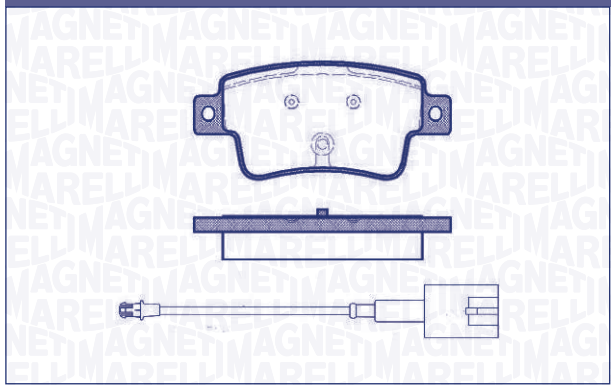

F/R	WVA	W×H×Th (mm)	SiS	Nr. Pz	W.i.	i	Extra kit [Opt]
R	25357 25451	102×47,1×17,2	BSC	4x	2x	–	OK012

ABARTH	
Grande Punto Evo (199)	10/09 →
FIAT	
Grande Punto Evo (199)	10/09 →

PF0447

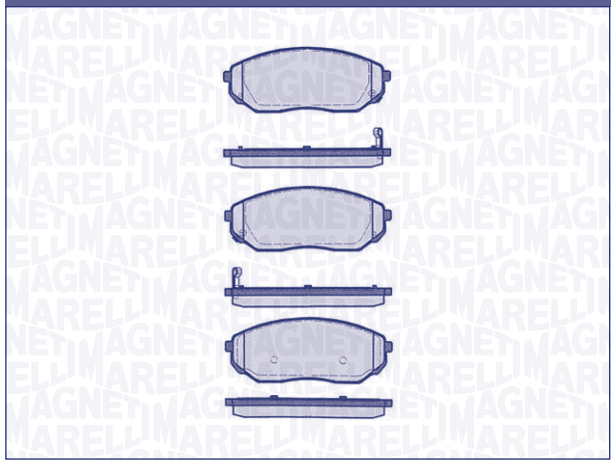

F/R	WVA	W×H×Th (mm)	SiS	Nr. Pz	W.i.	i	Extra kit [Opt]
F	24092 24178 24179	155×60×17,3	AK	2x 1x 1x	2x	–	

KIA	
Sorento (JC)	02 →

PF0448

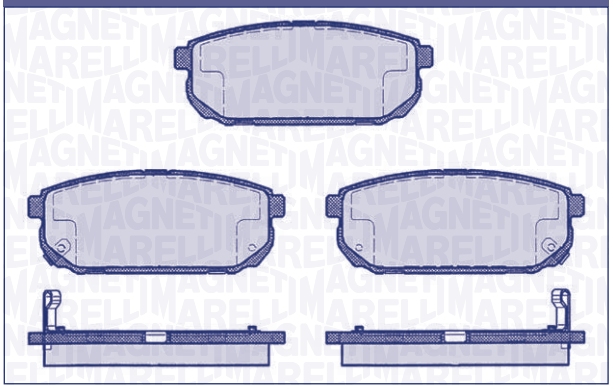

F/R	WVA	W×H×Th (mm)	SiS	Nr. Pz	W.i.	i	Extra kit [Opt]
R	23993 23997 24058	118,2×47×15,8	AK	2x 1x 1x	2x	–	OK095

KIA	
Sorento (JC)	02→

PF0449

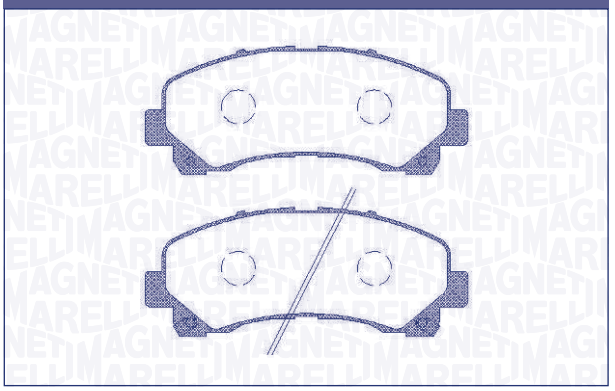

F/R	WVA	W×H×Th (mm)	SiS	Nr. Pz	W.i.	i	Extra kit [Opt]
F	25149 25150 25151	151,8×60,8×17,4	AK	2x 1x 1x	2x	–	

ISUZU	
D-Max (8DH)	10/06→
D-Max	12→
Rodeo 4x4	01/05→

PF0450

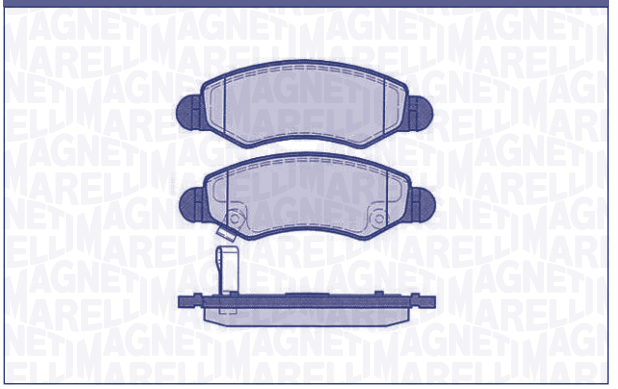

F/R	WVA	W×H×Th (mm)	SiS	Nr. Pz	W.i.	i	Extra kit [Opt]
F	23605 23606 23607	130,9×44,3×15,7	BSC	3x 1x	1x	–	

SUZUKI	
Ignis II	03→

PF0453

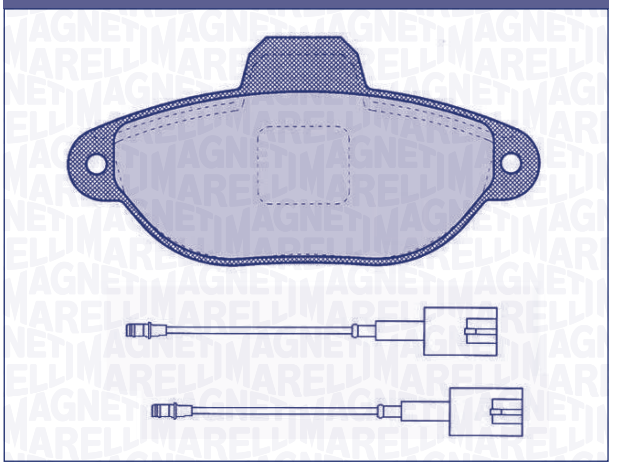

F/R	WVA	W×H×Th (mm)	SiS	Nr. Pz	W.i.	i	Extra kit [Opt]
F	21436	115×55,6×17	BD	4x	2x	w.i. L=195mm	OK029/ OK094

FIAT	
500 (169) 0.9 TwinAir 48Kw	09/10→
500 (169) 1.2	06/13→
FORD	
Ka II (B420) (EURO 5-6)	11/10→

PF0454

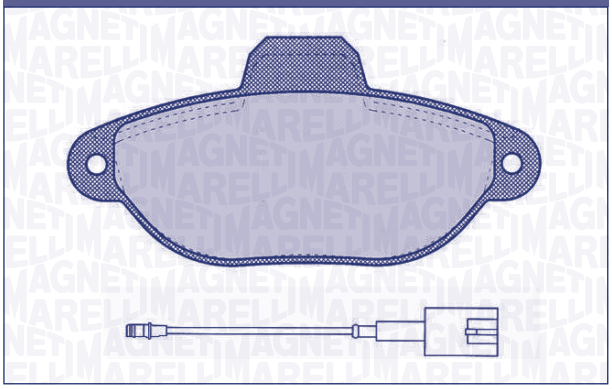

F/R	WVA	W×H×Th (mm)	SiS	Nr. Pz	W.i.	i	Extra kit [Opt]
F	21436	115×55,6×17	BD	4x	1x	w.i. L=195mm	OK029/ OK094

FIAT	
500	07 →

FORD	
Ka II (B420)	09 →

PF0455

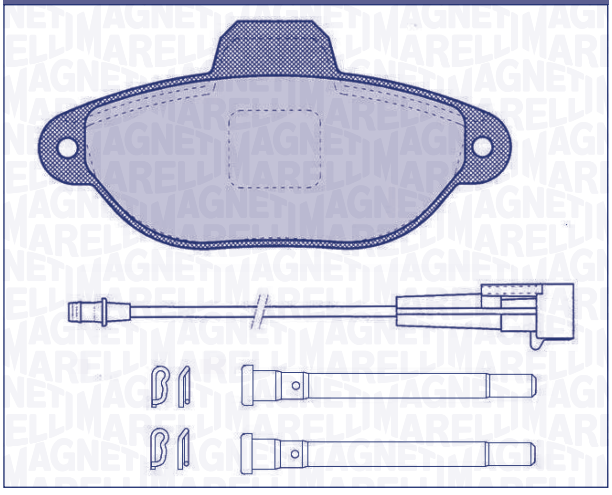

F/R	WVA	W×H×Th (mm)	SiS	Nr. Pz	W.i.	i	Extra kit [Opt]
F	21436	115×55,6×17	BD	4x	1x	w.i. L=195mm/ + Kit	OK029/ OK094

FIAT	
500	07 →
500 LPG	12/10 →

PF0456

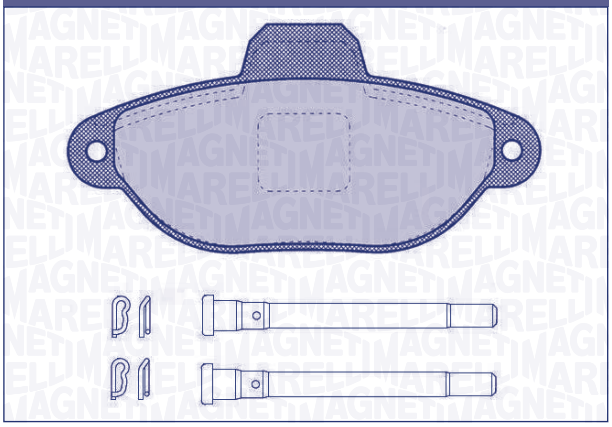

F/R	WVA	W×H×Th (mm)	SiS	Nr. Pz	W.i.	i	Extra kit [Opt]
F	21436	115×55,6×17	BD	4x	[-]	+ Kit	OK029/ OK094

FIAT	
Panda II (169)	10/09 →

PF0457

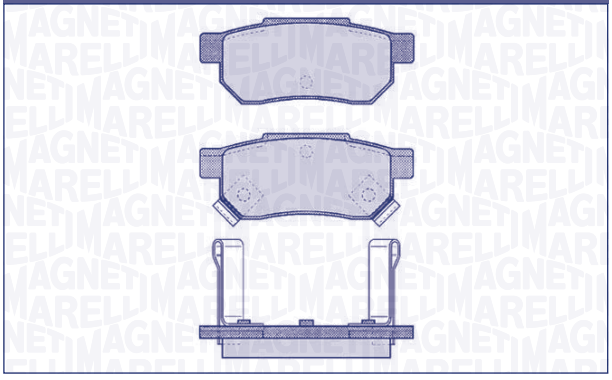

F/R	WVA	W×H×Th (mm)	SiS	Nr. Pz	W.i.	i	Extra kit [Opt]
R	21312 21313 21314	88,9×35,2×13	AK	2x 1x 1x	2x	–	

HONDA	
Accord	86 →
Civic	88 →
Concerto	90 →
Integra DOHC	86 →
Jazz (GD)	02 →
Prelude coupè	87 →

MG	
ZR	06/01 →
ZS	07/01 →

ROVER	
25 (RF)/45 (RT)	98 →
214-216-218-220	90 →
414-416-418-420	90 →

PF0458

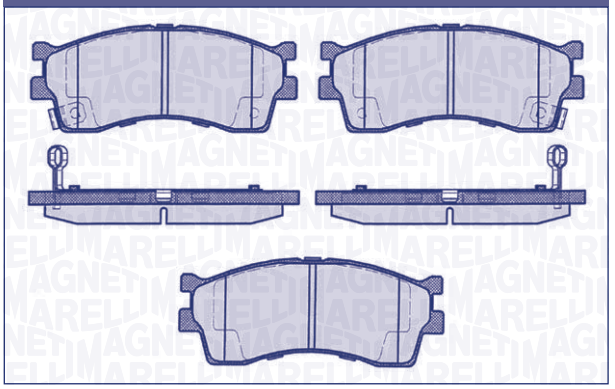

F/R	WVA	W×H×Th (mm)	SiS	Nr. Pz	W.i.	i	Extra kit [Opt]
F	23873 23874 23875	129×51,4×16,5	ST	2x 1x 1x	2x	–	

KIA	
Carens I (FC)	00 →
Clarus II	99 →
Rio (DC)	08/00 →
Shuma II	01 →

PF0459

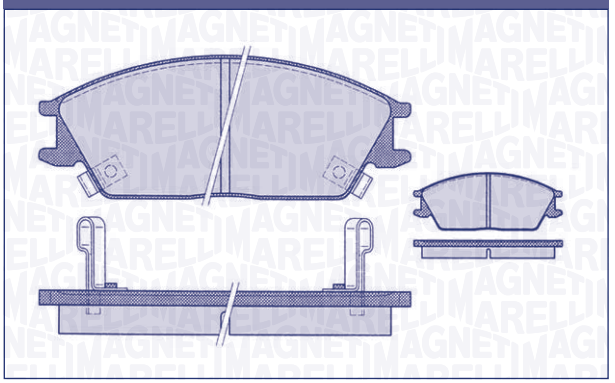

F/R	WVA	W×H×Th (mm)	SiS	Nr. Pz	W.i.	i	Extra kit [Opt]
F	21012 21773 21774	127,5×49×15,5	AK	2x 1x 1x	2x	–	

HYUNDAI	
Accent	94 →
Elantra	90 →
Excel	90 →
Getz (TB)	02 →
Pony	92 →
Scoupé	90 →

PF0460

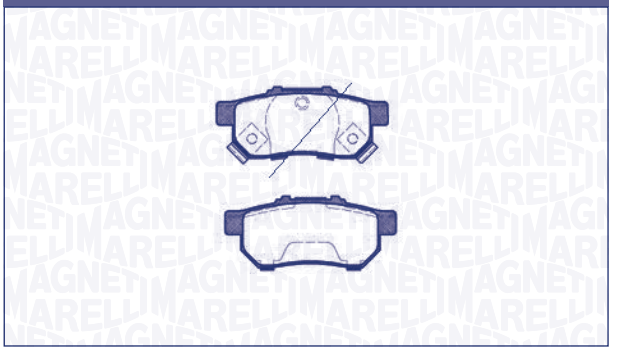

F/R	WVA	W×H×Th (mm)	SiS	Nr. Pz	W.i.	i	Extra kit [Opt]
R	21738 23343 23344	99×36,6×12,7	AK	2x 1x 1x	2x	–	

HONDA	
Civic IV	91 →
Civic IV Coupè (EJ_;EM_)	94 →
Civic V (EG_)(EH_)(EJ_)	95 →
CRX (EH;EG)	92 → 98
Jazz III (GE)	08 →

PF0461

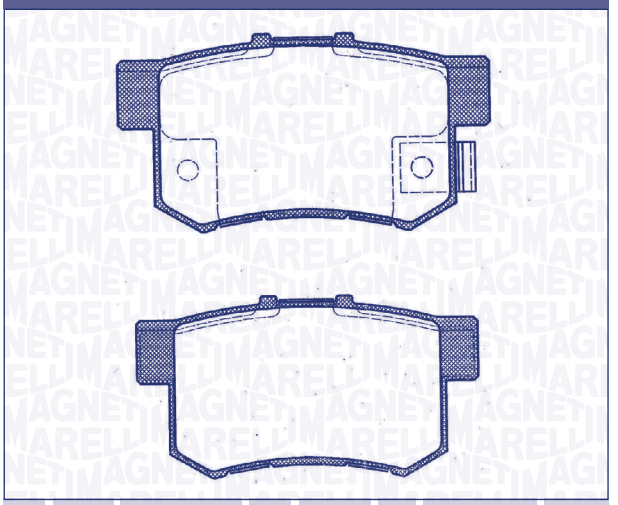

F/R	WVA	W×H×Th (mm)	SiS	Nr. Pz	W.i.	i	Extra kit [Opt]
R	21719 23652 23653	88,9×47,5×14,7	AK	2x 1x 1x	2x	–	

HONDA	
Accord VIII	03 →
CRV II	07/02 →
FR-V	05 →
Stream (RN)	01 →

PF0462

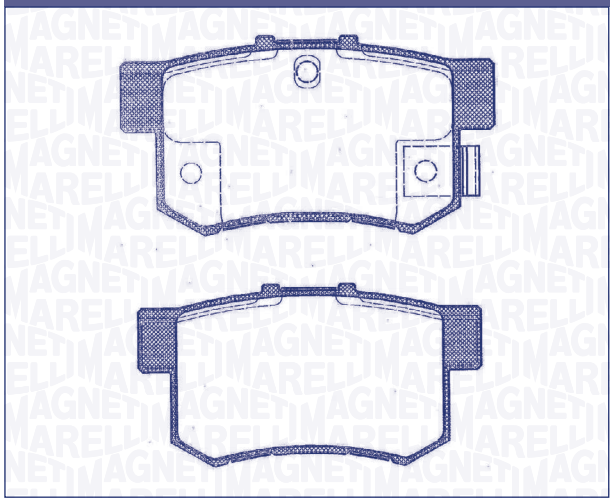

F/R	WVA	W×H×Th (mm)	SiS	Nr. Pz	W.i.	i	Extra kit [Opt]
R	21719 21720 21721	88,9×47,5×14,7	AK	2x 1x 1x	2x	–	

HONDA	
Accord IV	90 →
Accord V	96 →
Accord VI (CE7)	96 →
Accord VII Coupe (CG)	98 →
Civic V (MB6)	97 →
Civic VI	01 →
Civic VII	05/01 →
Integra Type-R	02/02 →
Legend II	91 →
Legend III	96 →
Prelude IV	93 →
Prelude V (BB)	96 →
Shuttle	94 →
ROVER	
618/620/623	93 →
SUZUKI	
Kizashi (FR)	10/10 →

PF0463

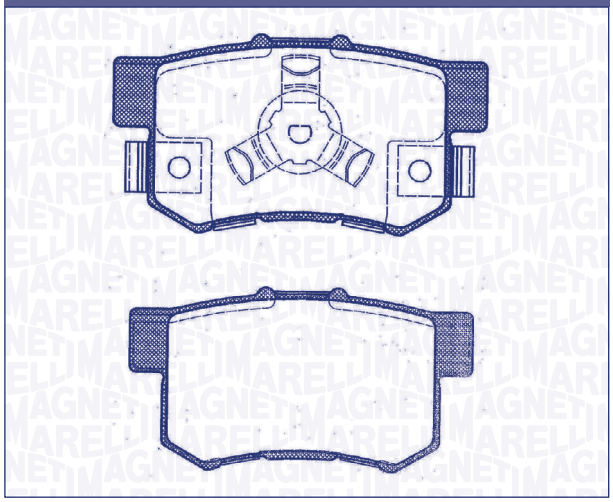

F/R	WVA	W×H×Th (mm)	SiS	Nr. Pz	W.i.	i	Extra kit [Opt]
R	24231 24232 24233	88,9×47,5×14,7	AK	2x 1x 1x	2x	–	

HONDA	
Accord VIII	08 →
CRV II	02/05 →
CRV III	07 →
FR-V	05 →

PF0464

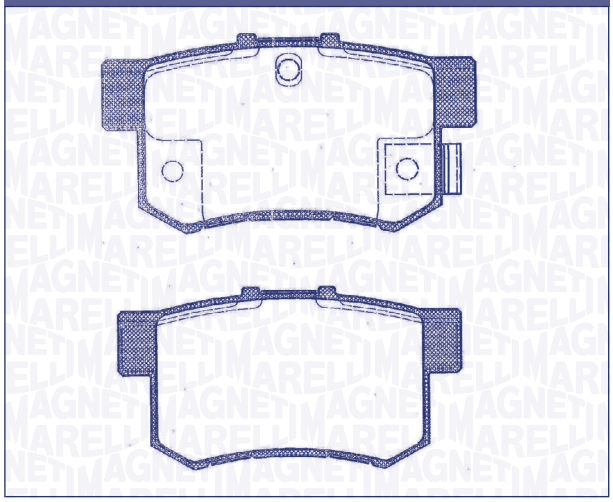

F/R	WVA	W×H×Th (mm)	SiS	Nr. Pz	W.i.	i	Extra kit [Opt]
R	21719 21720 24388	88,9×47,5×14,7	AK	2x 1x 1x	1x	–	

FIAT	
Sedici	06 →
SUZUKI	
SX4 (GY)	06 →
SX4	08/13 →

PF0465

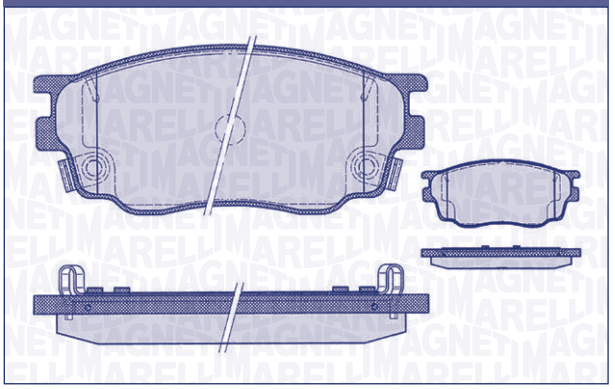

F/R	WVA	W×H×Th (mm)	SiS	Nr. Pz	W.i.	i	Extra kit [Opt]
F	24247 24248 24249	131,2×56×17,1	ST	2x 1x 1x	2x	–	

MAZDA	
6 1.8i	02 →

PF0466

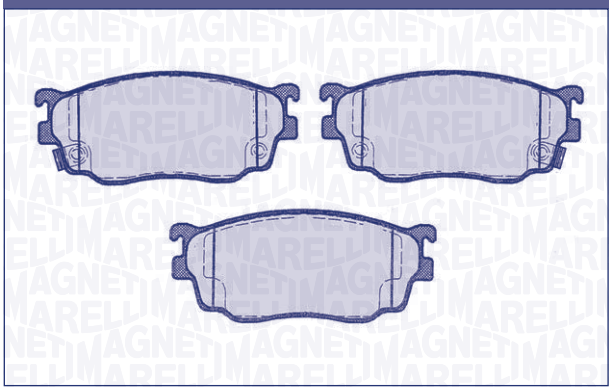

F/R	WVA	W×H×Th (mm)	SiS	Nr. Pz	W.i.	i	Extra kit [Opt]
F	23777 23778 23779	131,8×56,2×16,1	ST	2x 1x 1x	2x	–	

MAZDA	
363F VI	01 →
626 V (GF)	05/97 →
626 V SW (GW)	98 →
Premacy (CP)	99 →

PF0467

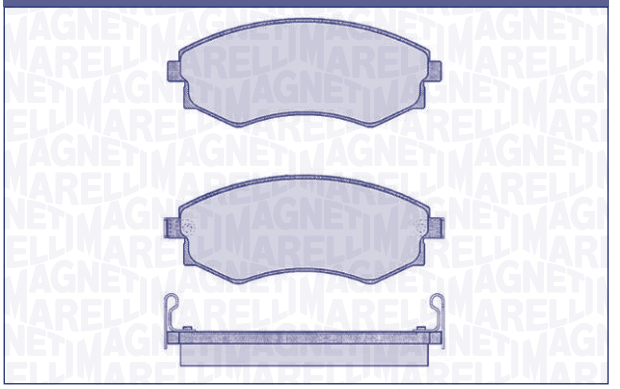

F/R	WVA	W×H×Th (mm)	SiS	Nr. Pz	W.i.	i	Extra kit [Opt]
F	21725 21726 21727	137×53×17	ST	2x 1x 1x	2x	–	

HYUNDAI	
Coupè	97 →
Lantra	95 →
Matrix	02 →
Santamo	00 →
Sonata	89 →
Sonata II (Y3)	07/96 →
Sonata III (EF)	98 →
Sonica	93 →
KIA	
Magentis (GD)	05/01 →
Optima	05/01 →
NISSAN	
Prairie	92 →
Praire Van	89 →
Primera (P10)	90 →
Primera Van (P10)	92 →
SSANGYONG	
Korando II (KJ)	01/97 →

PF0468

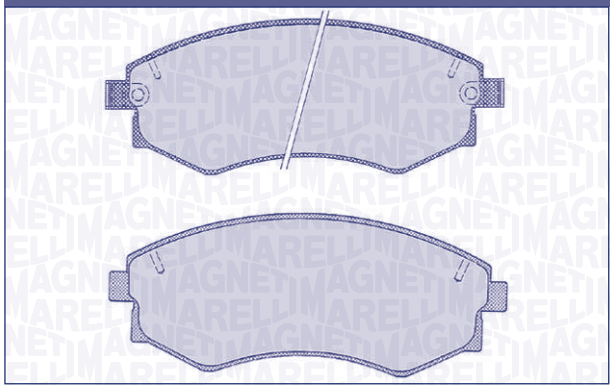

F/R	WVA	W×H×Th (mm)	SiS	Nr. Pz	W.i.	i	Extra kit [Opt]
F	21725 21726 21727	137×54,3×17	ST	2x 1x 1x	2x	–	

HYUNDAI	
Coupè	96 →
Elantra	05/95 →
Lantra	95 →
Santamo	00 →
Sonata	89 →
Sonica II (G4JP)	11/98 →
NISSAN	
Prairie	92 →
Praire Van	89 →
Primera (P10)	90 →
Primera Van (P10)	92 →
SSANGYONG	
Rexton (GA)	04/02 →

PF0469

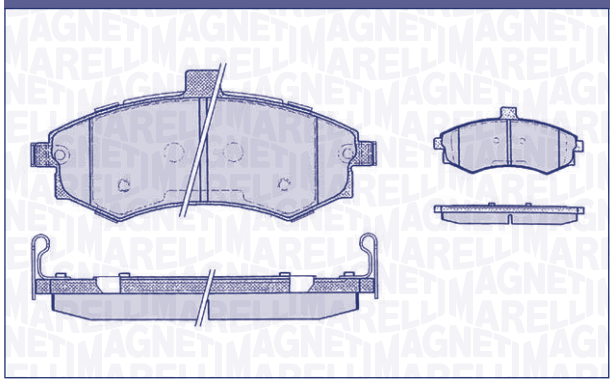

F/R	WVA	W×H×Th (mm)	SiS	Nr. Pz	W.i.	i	Extra kit [Opt]
F	24031 24032 24033	137×63,4×17,8	AK	2x 1x 1x	2x	–	

HYUNDAI	
Elantra II (XD)	04/01 →

PF0470

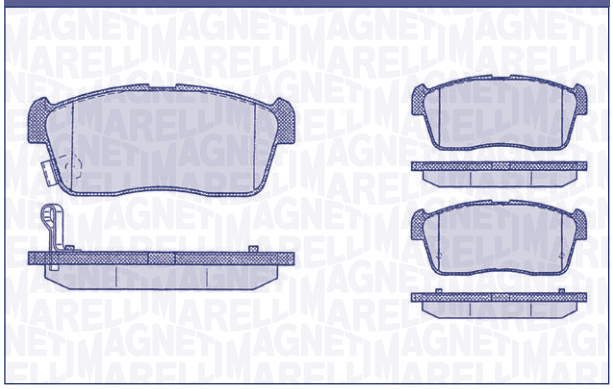

F/R	WVA	W×H×Th (mm)	SiS	Nr. Pz	W.i.	i	Extra kit [Opt]
F	23507 23508	108,7×45,4×16	ST	3x 1x	1x	–	

SUZUKI	
Alto V (GF)	01/09 →
Ignis (FH)	00 →
Ignis II	03 →

PF0471

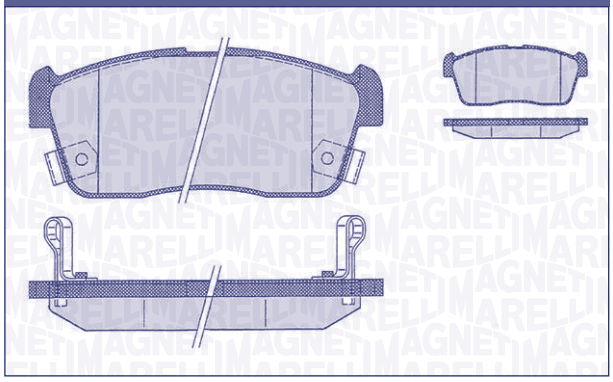

F/R	WVA	W×H×Th (mm)	SiS	Nr. Pz	W.i.	i	Extra kit [Opt]
F	23507 23508 23509	108,7×45,4×16	ST	2x 1x 1x	2x	–	

DAIHATSU	
Copen	03 →
Sirion	05 →
YRV (M2)	01 →
NISSAN	
Pixo	06/09 →
SUZUKI	
Carry	99 →
Super Carry	99 →
TOYOTA	
Bb II (QNC2_)	12/05 →

PF0472

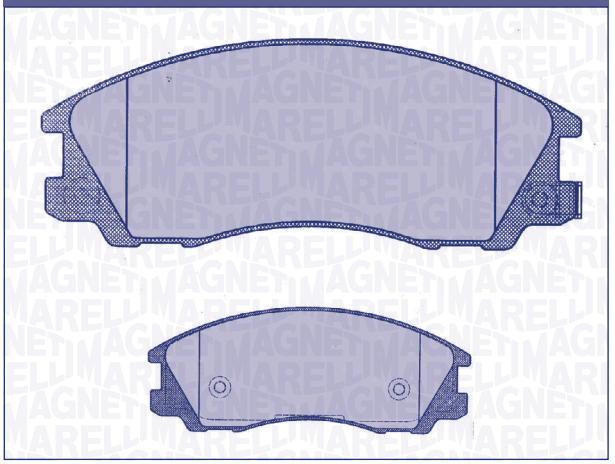

F/R	WVA	W×H×Th (mm)	SiS	Nr. Pz	W.i.	i	Extra kit [Opt]
F	24059 24060 24061	148,8×58×15,8	AK	2x 1x 1x	2x	–	

HYUNDAI	
Terracan (HP)	06/01 →

PF0473

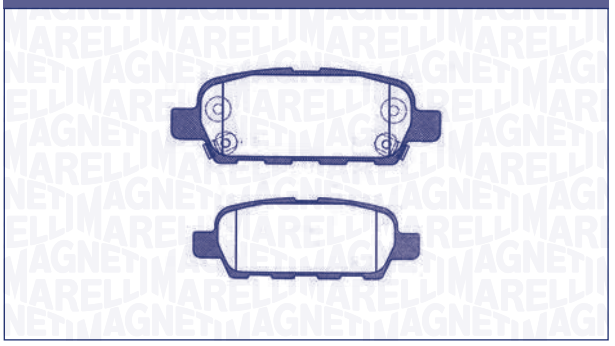

F/R	WVA	W×H×Th (mm)	SiS	Nr. Pz	W.i.	i	Extra kit [Opt]
R	23871 23872 24088	105,5×38,2×13,7	AK	2x 1x 1x	1x	–	

INFINITI	
EX 30D	04/10 →
EX 37	10/08 →
FX 30D	04/10 →
FX 37	10/08 →
NISSAN	
Cube (Z12)	10 →
Latio	10/06 →
Murano (Z50)(Z51)	03/05 →
Pathfinder (R50)	97 →
Qashqai	07 →
Tiida (C11X)	07 →
Tiida 3 volumi (SC11X)	07 →

PF0473

RENAULT	
Koleos	07 →
SUZUKI	
Grand Vitara III	06 →

PF0474

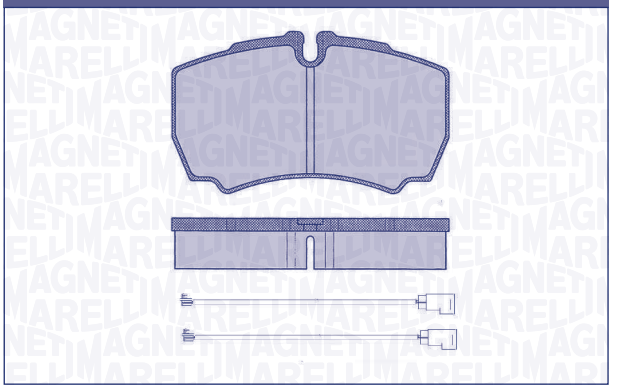

F/R	WVA	W×H×Th (mm)	SiS	Nr. Pz	W.i.	i	Extra kit [Opt]
R	29123	109,5×63,8×20	BR	4x	2x	w.i. L=570mm	OK060

FORD	
Transit	07/06 →

PF0475

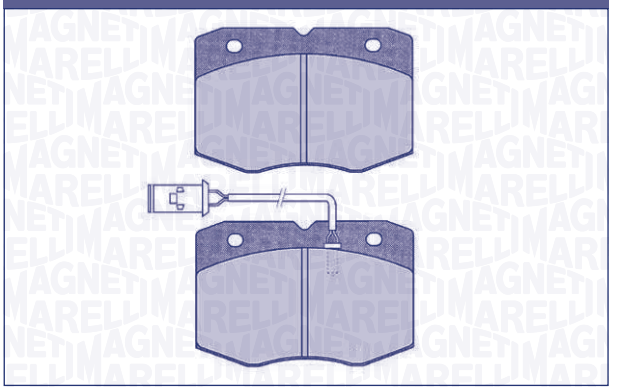

F/R	WVA	W×H×Th (mm)	SiS	Nr. Pz	W.i.	i	Extra kit [Opt]
F	29038	109,5×73×18,3	BR	2x 2x	2x	w.i. L=200mm	

IVECO - OM	
Daily 30.8	91 →
Daily 30.9	91 →

PF0476

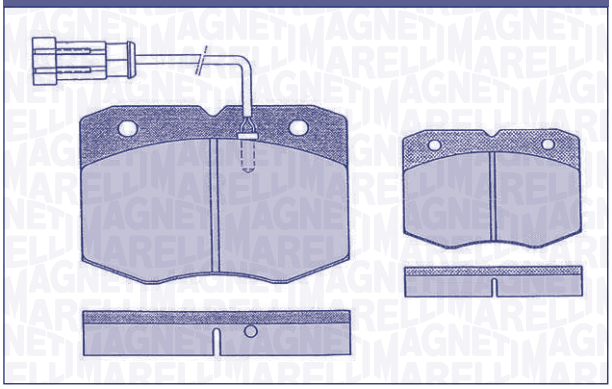

F/R	WVA	W×H×Th (mm)	SiS	Nr. Pz	W.i.	i	Extra kit [Opt]
F	29139	109,5×73×18,3	BR	2x 2x	2x	w.i. L=160mm	

IVECO - OM	
Daily 30.8	96 →
Daily 30.10	01/97 →

PF0477

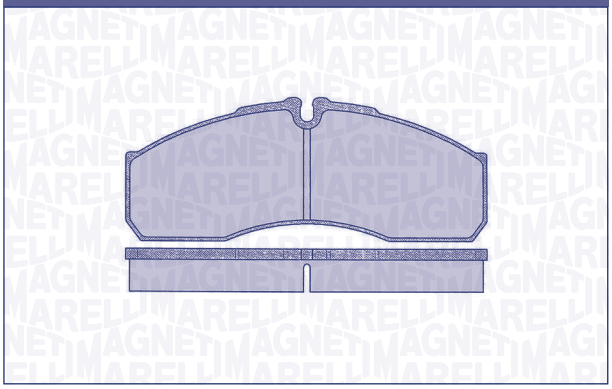

F/R	WVA	W×H×Th (mm)	SiS	Nr. Pz	W.i.	i	Extra kit [Opt]
F/R	29160	164,8×68×20	BR	4x	[-]	–	

IVECO - OM	
Daily C 65	00 →
LEYLAND	
Road Runner T45 (10.12)	86 →

PF0478

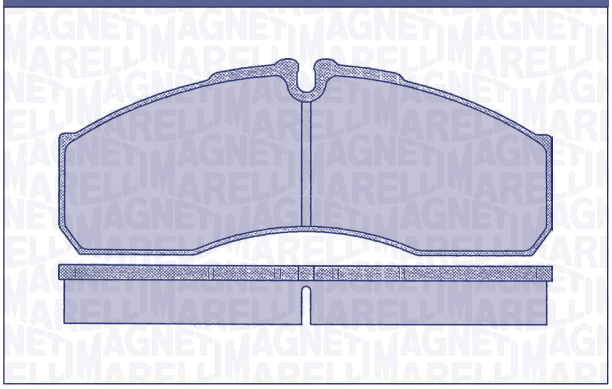

F/R	WVA	W×H×Th (mm)	SiS	Nr. Pz	W.i.	i	Extra kit [Opt]
F	29160	164,8×68×20	BR	2x 2x	2x	w.i. L=260mm	

NISSAN	
Atleon	00 →
RENAULT	
Mascott	99 →

PF0479

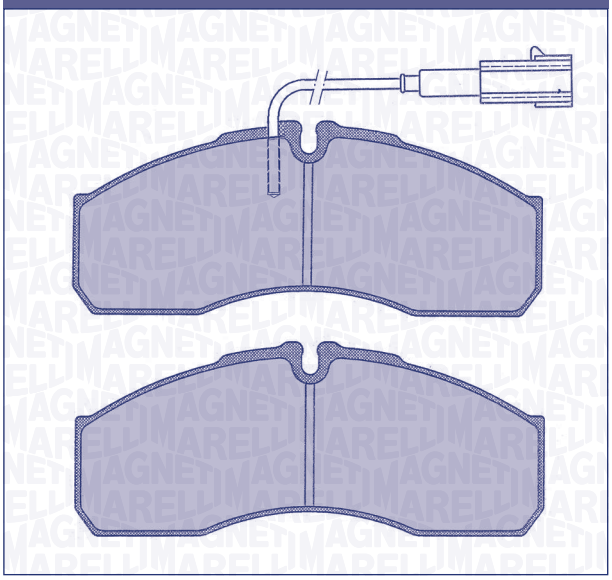

F/R	WVA	W×H×Th (mm)	SiS	Nr. Pz	W.i.	i	Extra kit [Opt]
F	29160 29260	164,8×68×20	BR	2x 2x	2x	w.i. L=250mm	

NISSAN	
Cabstar	10/06 →
Maxity	03/07 →

PF0480

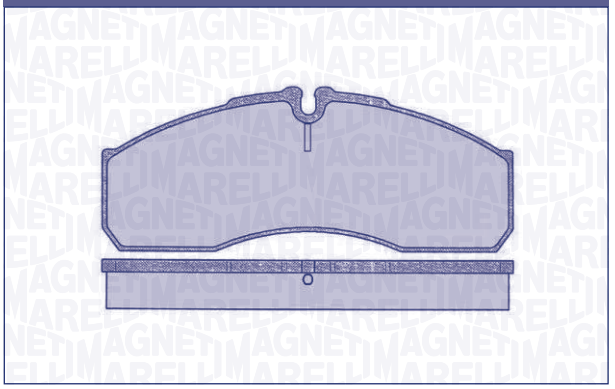

F/R	WVA	W×H×Th (mm)	SiS	Nr. Pz	W.i.	i	Extra kit [Opt]
F	29160 29161 29237	164,8×68×20,6	BR		[o]	–	OK060

MERCEDES	
Sprinter 6-t (906)	04/01 →

PF0481

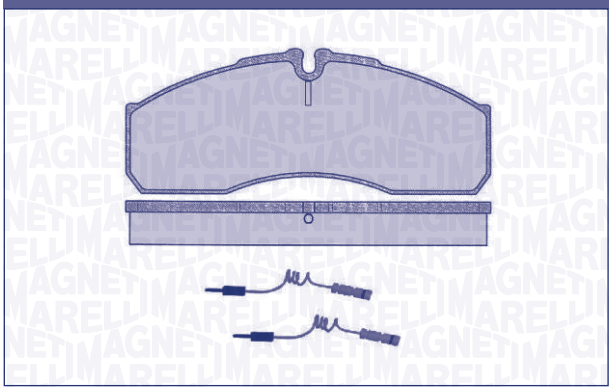

F/R	WVA	W×H×Th (mm)	SiS	Nr. Pz	W.i.	i	Extra kit [Opt]
F	29160	164,8×68×20,6	BR	4x	2x	w.i. L=240mm	

MERCEDES	
Sprinter 6-t (906)	04/01 →

PF0482

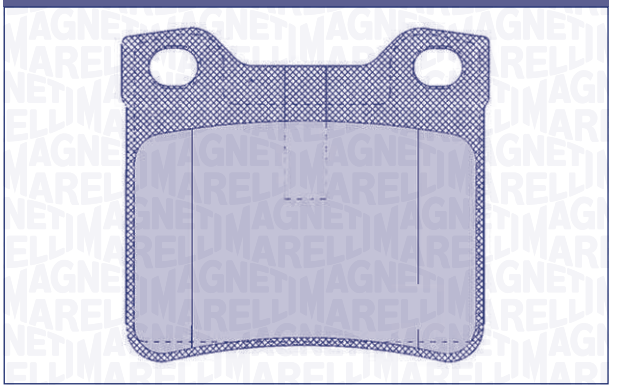

F/R	WVA	W×H×Th (mm)	SiS	Nr. Pz	W.i.	i	Extra kit [Opt]
R	21904	63,8×57,6×17	ATE	4x	[-]	–	

MERCEDES	
V (638)	96 →
Vito	95 →
PEUGEOT	
406	96 →
607	00 →

PF0484

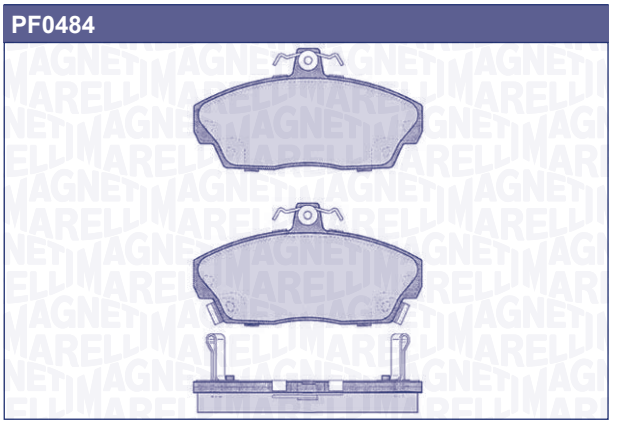

F/R	WVA	W×H×Th (mm)	SiS	Nr. Pz	W.i.	i	Extra kit [Opt]
F	21515 21516 21517 23158	129,2×69,7×18	LG	2x 1x 1x	2x	–	OK037

HONDA	
Civic IV	94 →
Civic VI	01 →
Civic VII	05/01 →
Concerto	90 →
LAND ROVER	
Freeland	98 →
MG	
MGR 3.9 V8	92 →
ZR	06/01 →
ZS	07/01 →

PF0484

ROVER	
25 (RF)	98 →
45 (RT)	98 →
214-216-218-219-220	90 →
414-416	03/95 →
420-418	91 →
820-825-827	91 →
Streetwise	03 →

PF0485

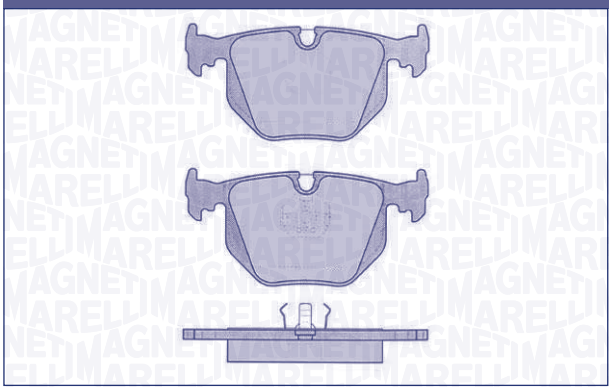

F/R	WVA	W×H×Th (mm)	SiS	Nr. Pz	W.i.	i	Extra kit [Opt]
R	21282 21283	123,1×59,2×17	ATE	2x 2x	[o]	–	

BMW	
7 (E38)	93 →
8 (E31)	90 →
M5 (E34)	94 →
X5 (E53)	05/01 →
MASERATI	
Ghibli II	05/92 →
Quattrporte II	94 →

PF0486

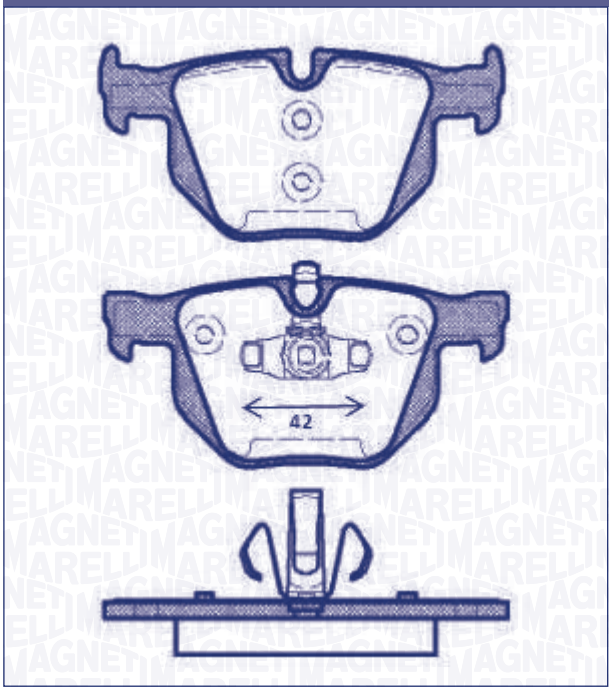

F/R	WVA	W×H×Th (mm)	SiS	Nr. Pz	W.i.	i	Extra kit [Opt]
R	23550 23551	123,1×59,2×17 123,1×58,2×17	ATE	2x 2x	[o]	–	

BMW	
3 (E90)	01/05 →
3 (E91)	01/05 →
3 Coupe (E92)	06 →

PF0487

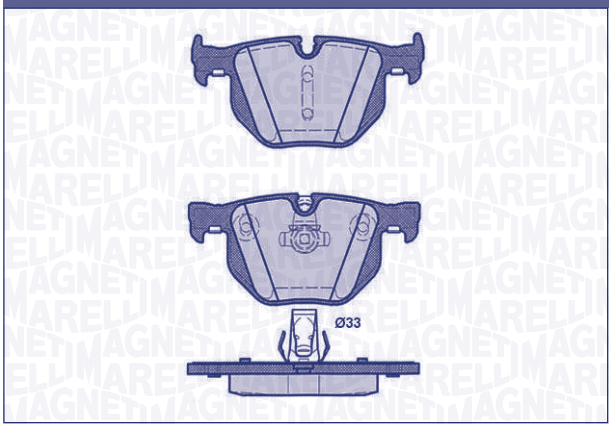

F/R	WVA	W×H×Th (mm)	SiS	Nr. Pz	W.i.	i	Extra kit [Opt]
R	21282 23447	122×59,2×17 122×58,2×17	ATE	2x 2x	[o]	–	

BMW	
X5 (E70)	07 →
X6 (E71-E72)	08 →

PF0490

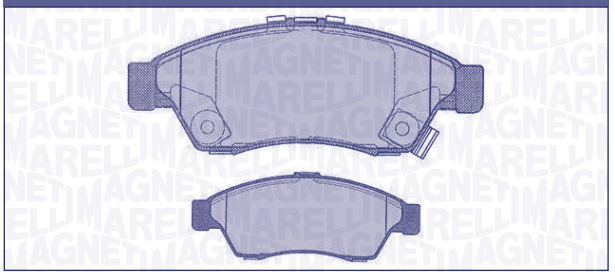

F/R	WVA	W×H×Th (mm)	SiS	Nr. Pz	W.i.	i	Extra kit [Opt]
F	23817 24034 24035	136,5×52,6×17	AK	3x 1x	1x	6 antirumore in confezione / 6 antinoise in the box	

SUZUKI	
Liana (ER)	01→

PF0488

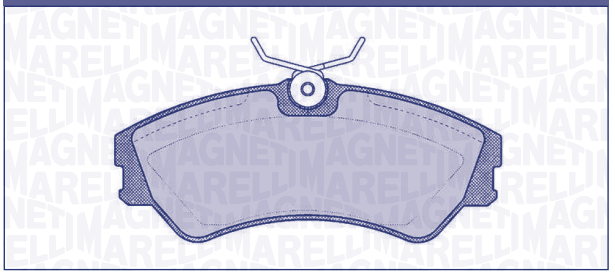

F/R	WVA	W×H×Th (mm)	SiS	Nr. Pz	W.i.	i	Extra kit [Opt]
F	20124	130×54,5×19	LG	4x	[-]	–	OK032

VOLKSWAGEN	
Transporter T4	90→

PF0491

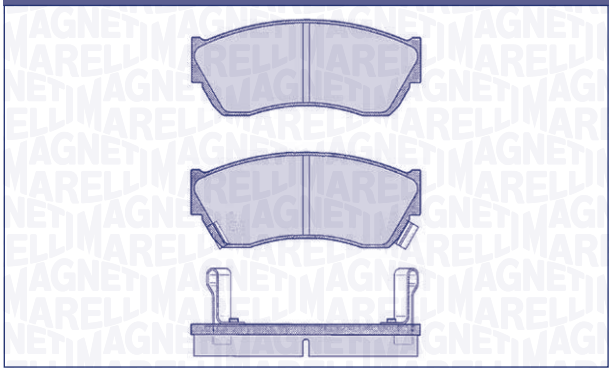

F/R	WVA	W×H×Th (mm)	SiS	Nr. Pz	W.i.	i	Extra kit [Opt]
F	21333 21334 21335	107,3×44,6×15	AK	2x 1x 1x	2x	–	

GEO	
Metro	91→

PF0491

SUZUKI	
Alto III (FA-G1)	07/96→
Alto IV (FF)	06/02→
Swift	86→
TATA	
Indigo	01/03→

PF0492

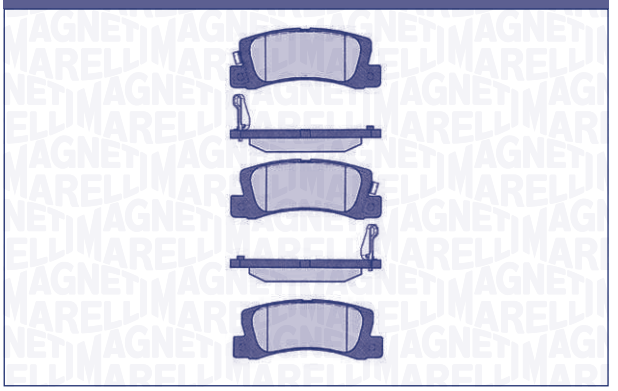

F/R	WVA	W×H×Th (mm)	SiS	Nr. Pz	W.i.	i	Extra kit [Opt]
R	20076 20077 21833	107,8×42,6×15,5	AK	2x 1x 1x	2x	–	

TOYOTA	
Avensis	→06/01
Camry	87→
Camry SW	88→
Camry II	88→
Camry III	91→
Camry IV (V20)	00→
Camry V (V30)	11/01→
Carina E	92→
Celica	90→
Celica Cabrio	90→
Corolla Coupé	85→
Corolla GT	87→
Corona	92→
Curren	94→
MR2	85→
Scepter	92→
Scepter Coupé	92→

PF0493

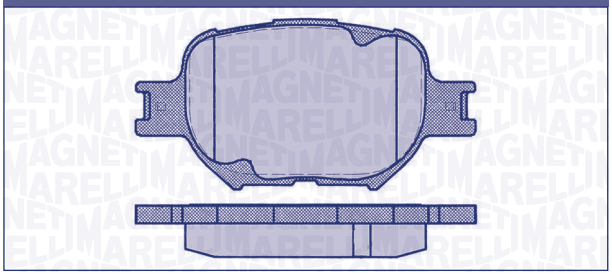

F/R	WVA	W×H×Th (mm)	SiS	Nr. Pz	W.i.	i	Extra kit [Opt]
F	23526 23564	117,5×58,7×17,5	AK	4x	[-]	–	

TOYOTA	
Celica (ZZT)	11/99 →
Corolla MPV (E12J)	01/02 →

PF0494

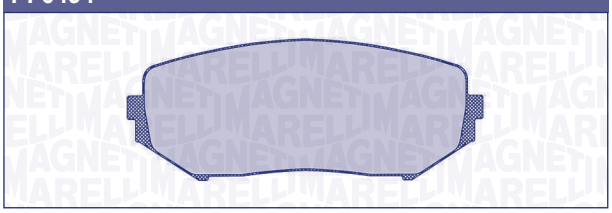

F/R	WVA	W×H×Th (mm)	SiS	Nr. Pz	W.i.	i	Extra kit [Opt]
F	24346	137,9×54,7×17	ST	4x	2x	2 segnalatori acustici / 2 acoustic sensors	

SUZUKI	
Gran Vitara III	06 →

PF0495

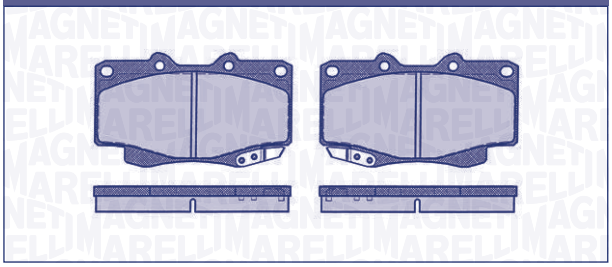

F/R	WVA	W×H×Th (mm)	SiS	Nr. Pz	W.i.	i	Extra kit [Opt]
F	21679 21680	119,2×68×17	ST	2x 2x	4x	4 antirumore in confezione / 4 antinoise in the box	

TOYOTA	
Fortuner	06/04 →
Hilux Pick-up (_N_)	08/01 →
Hilux Pick-up	08/05 →

PF0496

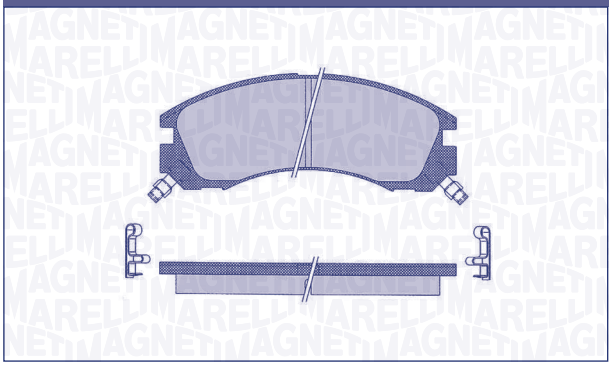

F/R	WVA	W×H×Th (mm)	SiS	Nr. Pz	W.i.	i	Extra kit [Opt]
F	21363	150×59×15,4	AK	4x	2x	2 segnalatori acustici / 2 acoustic sensors / antirumore in confezione / antinoise in the box	

CITROËN	
C-Crosser	07 →
MITSUBISHI	
Outlander I	05/03 →
Outlander II (CW)	11/06 →
Outlander III (GG,W)(GF,W)	08/12 →
Pajero Sport	98 →
Space Wagon (N5)	10/98 →
PEUGEOT	
4007	02/07 →

PF0497

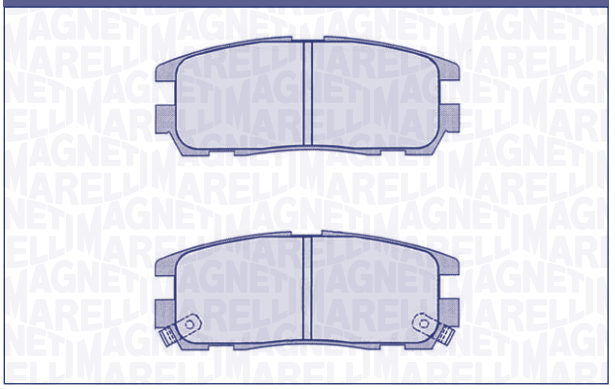

F/R	WVA	W×H×Th (mm)	SiS	Nr. Pz	W.i.	i	Extra kit [Opt]
R	21875 21876 21877	109,5×42,5×16	ST	2x 1x 1x	2x	–	

ISUZU	
Bighorn	93 →
D-Max	02 →
MU 4WD	94 →
Rodeo	93 →
Trooper IV	93 →
Trooper V	04/00 →
OPEL	
Monterey	92 →
VAUXHALL	
Frontera Mk II	98 →

PF0498

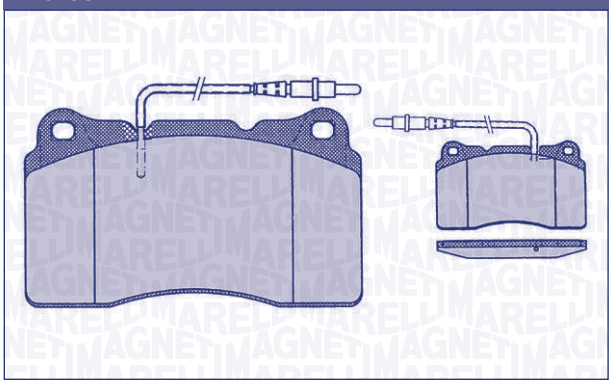

F/R	WVA	W×H×Th (mm)	SiS	Nr. Pz	W.i.	i	Extra kit [Opt]
F	23092 23575 23576	131,8×77,3×15,8	BR	2x 2x	4x	w.i. L=370mm / 4 antirumore in confezione / 4 antinoise in the box	

CITROËN	
C8	11/02 →
LANCIA	
Phedra (179)	08/02 →

PF0498

PEUGEOT	
607	00 →
807 (E)	06/02 →

PF0499

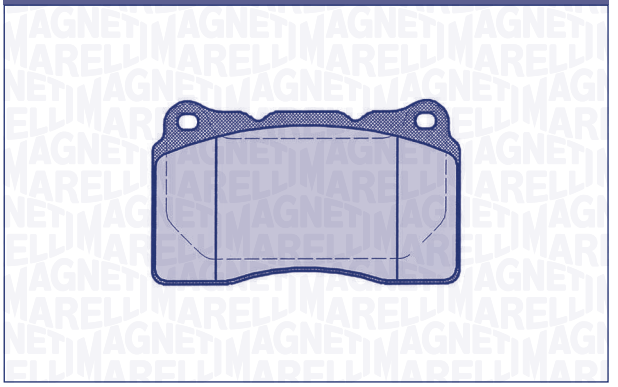

F/R	WVA	W×H×Th (mm)	SiS	Nr. Pz	W.i.	i	Extra kit [Opt]
F	23092	131,8×77,3×15,8	BR	4x	[-]	4 antirumore in confezione / 4 antinoise in the box	

MITSUBISHI	
Lancer VIII (CS_A) EVO	03/04 →
Lancer IX (CS_A) EVO	06 →
VOLVO	
S 60	03 →
V 70 II	03/03 →

PF0500

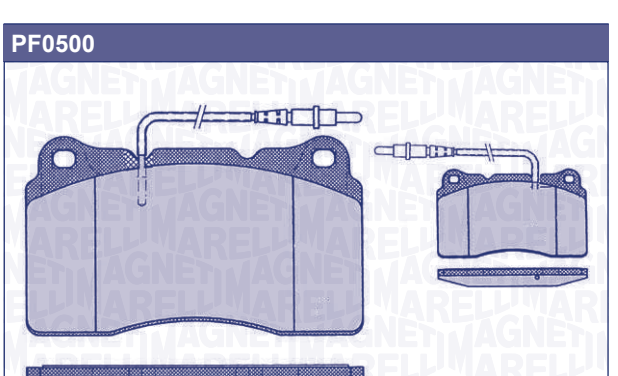

F/R	WVA	W×H×Th (mm)	SiS	Nr. Pz	W.i.	i	Extra kit [Opt]
F	23575 23576	131,8×77,3×15,2	BR	2x 2x	4x	w.i. L=160mm / 4 antirumore in confezione / 4 antinoise in the box	

FIAT	
Ulisse II V6	08/02 →

PF0501

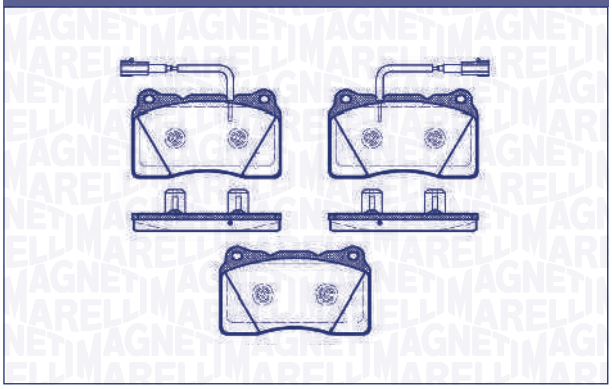

F/R	WVA	W×H×Th (mm)	SiS	Nr. Pz	W.i.	i	Extra kit [Opt]
F	23756 23757	131,8×77,3×15,8	BR	2x 1x 1x	2x	w.i. L=150mm / antirumore in confezione / antinoise in the box	

ALFA ROMEO	
Giulietta (940)	10 →

PF0502

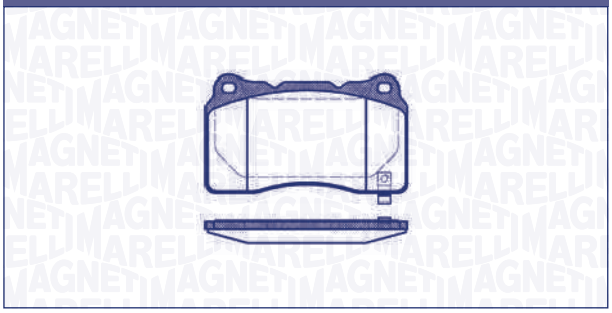

F/R	WVA	W×H×Th (mm)	SiS	Nr. Pz	W.i.	i	Extra kit [Opt]
F	23325	131,8×77,3×16,1	BR	4x	4x	antirumore in confezione / antinoise in the box	

CADILLAC	
ATS	02/13 →
CHEVROLET	
Corvette (C7)	09/13 →
OPEL	
Astra J	10/12 →
Insignia	08 →

PF0503

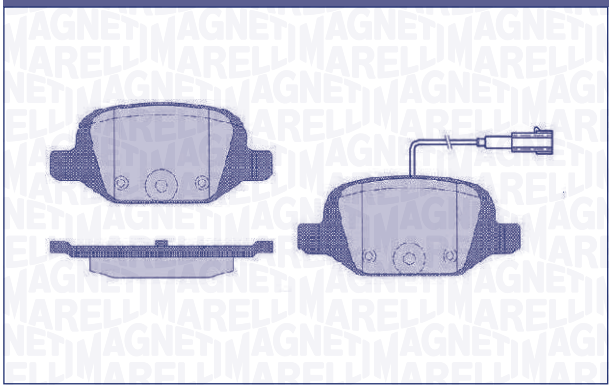

F/R	WVA	W×H×Th (mm)	SiS	Nr. Pz	W.i.	i	Extra kit [Opt]
R	23601 25347	95,8×43,9×13,7	LG	2x 2x	2x	w.i. L=400mm	OK039

ABARTH	
500 Abarth (169)	06/11 →
500 C Abarth (169)	06/11 →

PF0504

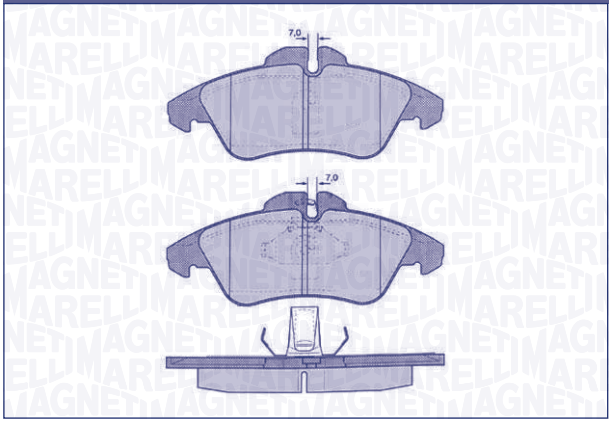

F/R	WVA	W×H×Th (mm)	SiS	Nr. Pz	W.i.	i	Extra kit [Opt]
F	21576 21577	156,5×64,8×20,5	ATE	2x 2x	[o]	–	

MERCEDES	
Sprinter 2-t (901-902)	95 →
Sprinter 3-t (903)	95 →
V (638)	96 →
Vito	95 →
VOLKSWAGEN	
LT	96 →

PF0505

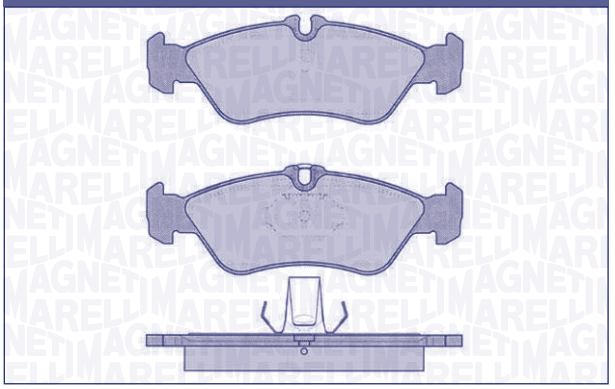

F/R	WVA	W×H×Th (mm)	SiS	Nr. Pz	W.i.	i	Extra kit [Opt]
R	21592 21593	156,4×54,8×18,5	ATE	2x 2x	[o]	–	OK023

MERCEDE-BENZ	
Sprinter 2-t (901-902)	97 →
Sprinter 3-t (903)	95 →
VOLKSWAGEN	
LT 35	96 →

PF0506

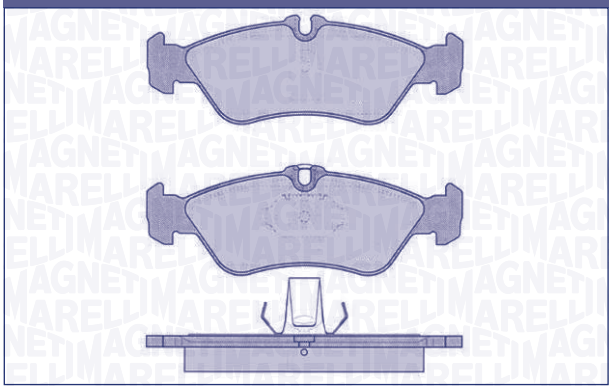

F/R	WVA	W×H×Th (mm)	SiS	Nr. Pz	W.i.	i	Extra kit [Opt]
R	21592	156,4×54,8×17,5	ATE	2x 2x	[o]	–	OK023

VOLKSWAGEN	
LT 35	98 →

PF0507

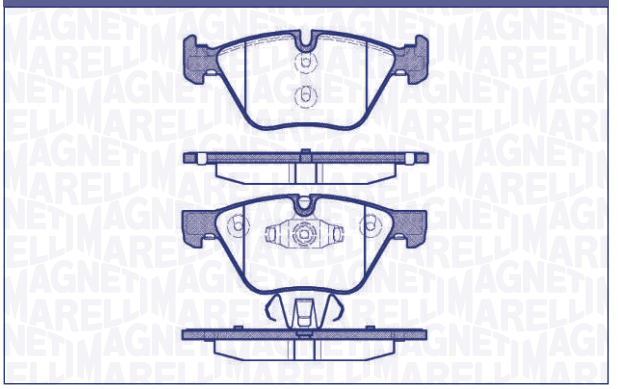

F/R	WVA	W×H×Th (mm)	SiS	Nr. Pz	W.i.	i	Extra kit [Opt]
F	23794 24096 24193	154,8×63,3×20 155,3×63,3×20	ATE	2x 2x	[o]	–	OK048

BMW	
1 130i (E87)	05 →
1 Coupe (E82)	10/07 →
1 Cabriolet (E88)	03/08 →
3 (E92) Coupè	06 →

PF0508

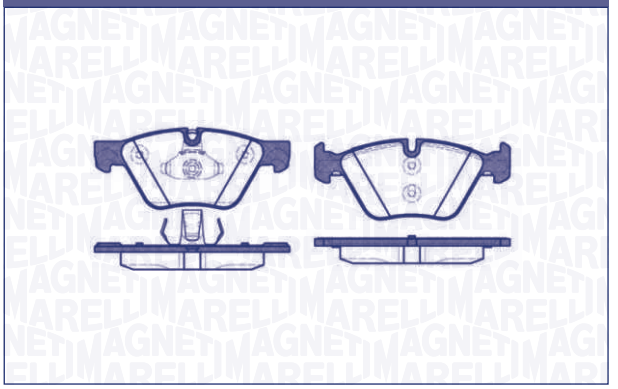

F/R	WVA	W×H×Th (mm)	SiS	Nr. Pz	W.i.	i	Extra kit [Opt]
F	23794 24697	154,8×63,3×20 155×63,3×20	ATE	2x 2x	[o]	–	

BMW	
5 (F10)	03/10 →
5 Touring (F11)	03/10 →

PF0509

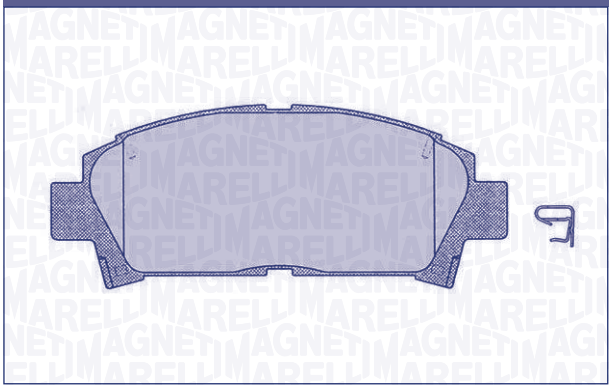

F/R	WVA	W×H×Th (mm)	SiS	Nr. Pz	W.i.	i	Extra kit [Opt]
F	21961	141×56,5×15,5	AK	4x	2x	2 segnalatori acustici / 2 acoustic sensors	

TOYOTA	
Avensis (T22)	00 →
Carina E (ST191)	05/92 →
MR2 (SW20)	92 →

PF0510

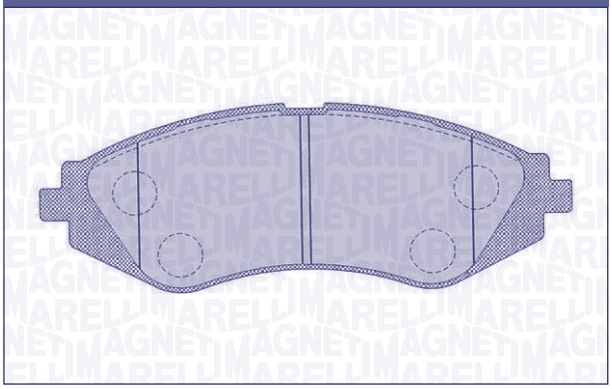

F/R	WVA	W×H×Th (mm)	SiS	Nr. Pz	W.i.	i	Extra kit [Opt]
F	23234	143×51×17	ST	4x	[-]	4 antirumore in confezione / 4 antinoise in the box	

CHEVROLET (DAEWOO)	
Nubira (KL)	03/05 →
DAEWOO	
Espero	96 →
Nexia	03 →
Nubira (KL)	97 →

PF0511

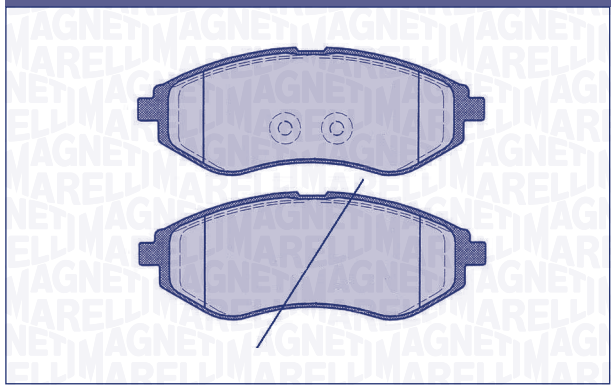

F/R	WVA	W×H×Th (mm)	SiS	Nr. Pz	W.i.	i	Extra kit [Opt]
F	23974 25295 25296	133,2×49×17,8	AK	2x 1x 1x	2x	–	

CHEVROLET (DAEWOO)	
Aveo	06 →
Kalos	01/05 →
DAEWOO	
Aveo	04 →
Kalos	→ 05

PF0512

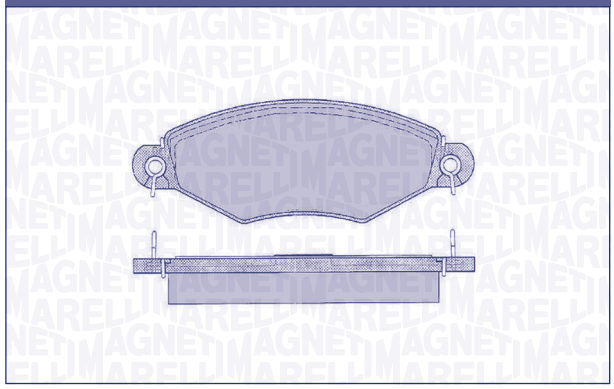

F/R	WVA	W×H×Th (mm)	SiS	Nr. Pz	W.i.	i	Extra kit [Opt]
F	23205	130,8×47,5×18	BSC	4x	[-]	–	OK034

PEUGEOT	
206	98 →

PF0513

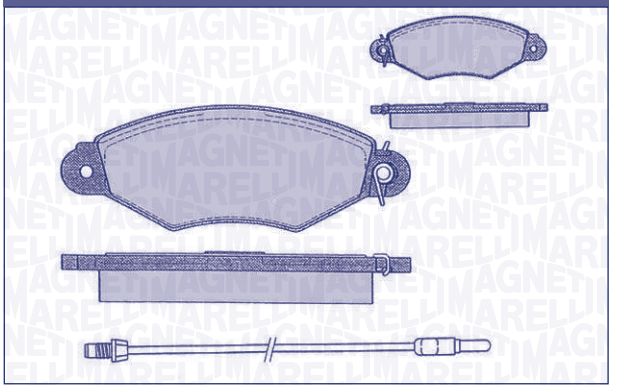

F/R	WVA	W×H×Th (mm)	SiS	Nr. Pz	W.i.	i	Extra kit [Opt]
F	21980	130,8×47,2×18	BSC	2x 2x	2x	w.i. L=170mm	OK034

RENAULT	
Kangoo	98 →

PF0514

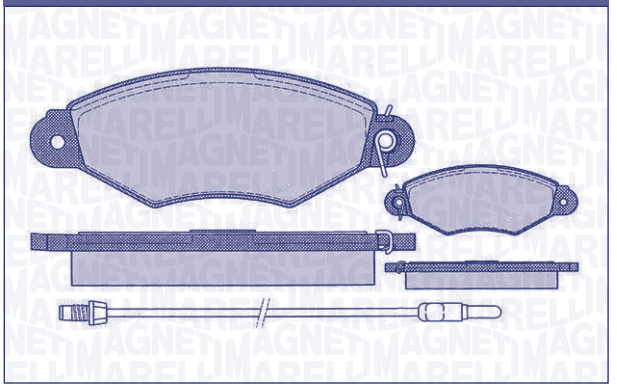

F/R	WVA	W×H×Th (mm)	SiS	Nr. Pz	W.i.	i	Extra kit [Opt]
F	21980 21981	130,8×47,5×18	BSC	2x 2x	1x	w.i. L=170mm	OK034

RENAULT	
Kangoo II (FC)	06/03 →

PF0515

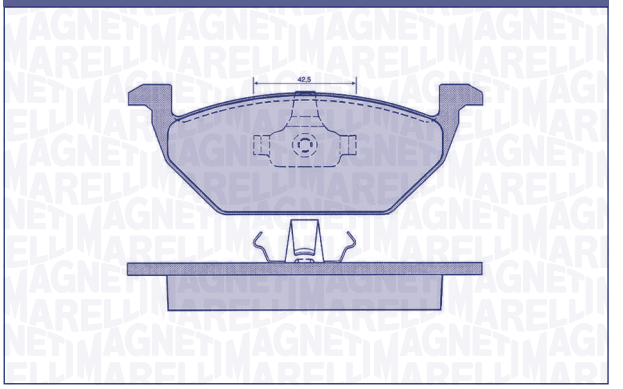

F/R	WVA	W×H×Th (mm)	SiS	Nr. Pz	W.i.	i	Extra kit [Opt]
F	21974	146×54,7×19,5	ATE	4x	[-]	–	

AUDI	
A 3	96 →
SKODA	
Octavia	97 →
VOLKSWAGEN	
Bora	98 →
Golf IV	97 →
Jetta II (1K)	08/06 →

PF0516

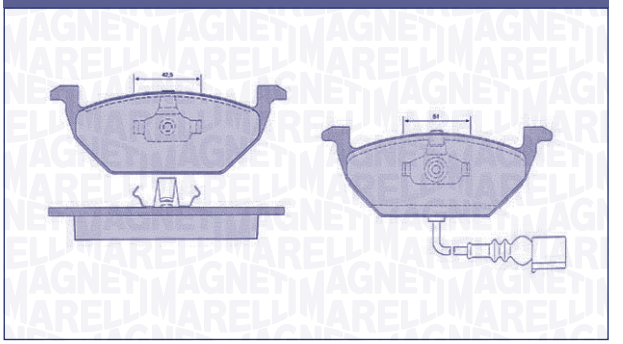

F/R	WVA	W×H×Th (mm)	SiS	Nr. Pz	W.i.	i	Extra kit [Opt]
F	21974 23131 23187	146×54,7×19,5	ATE	2x 1x 1x	1x	w.i. L=155mm	

AUDI	
A 2	00 →
A 3	99 →
SEAT	
Cordoba II (6L2)	02 →
Ibiza IV (6L1)	02/02 →
Leon	99 →
Toledo	99 →
SKODA	
Fabia I	99 →
Octavia II	00 →

PF0516

VOLKSWAGEN	
Bora	99 →
Bora Variant (J6)	05/99 →
Golf IV	99 →
Golf Variant IV	99 →
New Beetle	99 →
New Beetle Cabrio	03 →
Passat II	98 →
Polo IV (9N)	01 →
Polo Limousine (9N)	07/03 →

PF0517

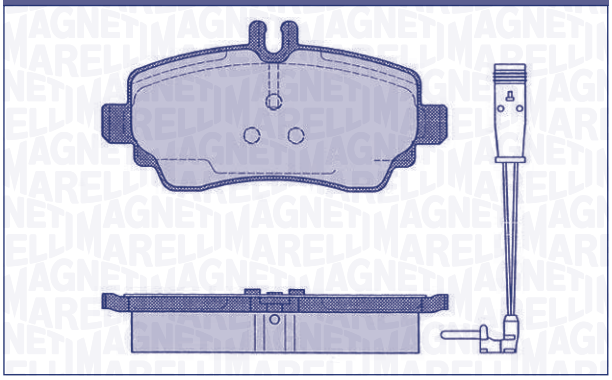

F/R	WVA	W×H×Th (mm)	SiS	Nr. Pz	W.i.	i	Extra kit [Opt]
F	23903	116,8×57,2×19,5	LG	4x	1x	w.i. L=95mm	OK012/ OK073/ OK076

MERCEDES	
Vaneo (414)	01 →

PF0518

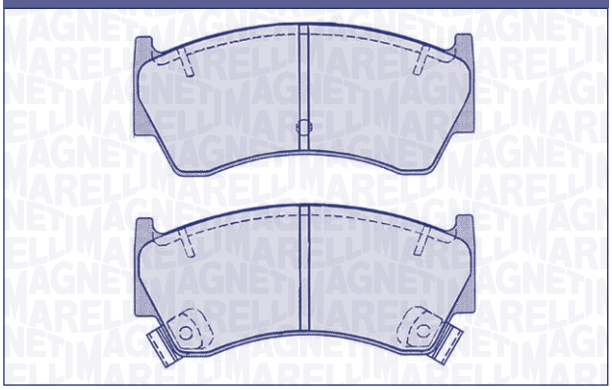

F/R	WVA	W×H×Th (mm)	SiS	Nr. Pz	W.i.	i	Extra kit [Opt]
F	23004	108,5×48×16	AK	2x 1x 1x	2x	–	

NISSAN	
200 SX	95 →
Almera (N15)	96 →
Sentra	96 →

PF0519

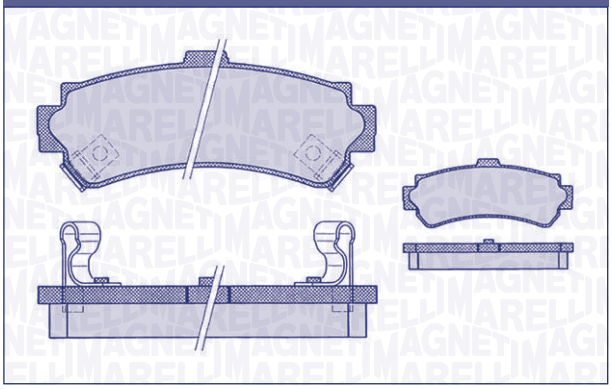

F/R	WVA	W×H×Th (mm)	SiS	Nr. Pz	W.i.	i	Extra kit [Opt]
R	23023 23024 23025	99,2×40×14,5	AK	2x 1x 1x	2x	–	

NISSAN	
200 SX	95 →
Almera (N15)	95 →
Almera (N16)	00 →
Sentra	95 →

PF0520

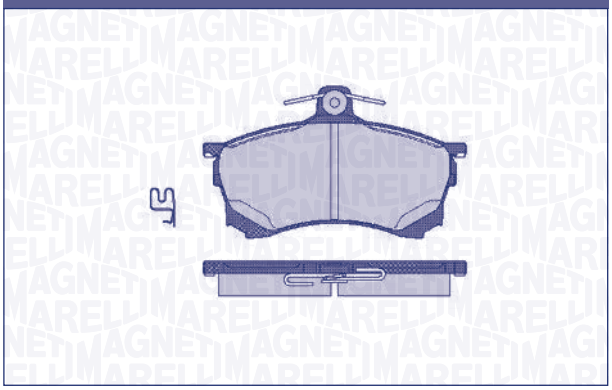

F/R	WVA	W×H×Th (mm)	SiS	Nr. Pz	W.i.	i	Extra kit [Opt]
F	23080	119×68,5×15,5	LG	4x	[-]	4 segnalatori acustici / 4 acoustic sensor / 4 antirumore in confezione / 4 antinoise in the box	OK030

MITSUBISHI	
Carisma	95 →

PF0521

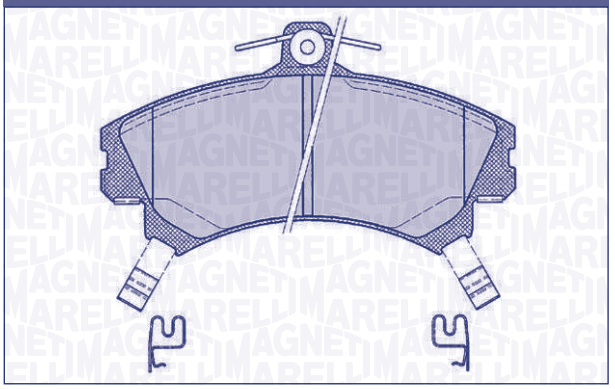

F/R	WVA	W×H×Th (mm)	SiS	Nr. Pz	W.i.	i	Extra kit [Opt]
F	21796 21920 21982	130×72,6×17	LG	4x	4x	4 segnalatori acustici / 4 acoustic sensor	

MITSUBISHI	
Colt VI	06/04 →

PF0522

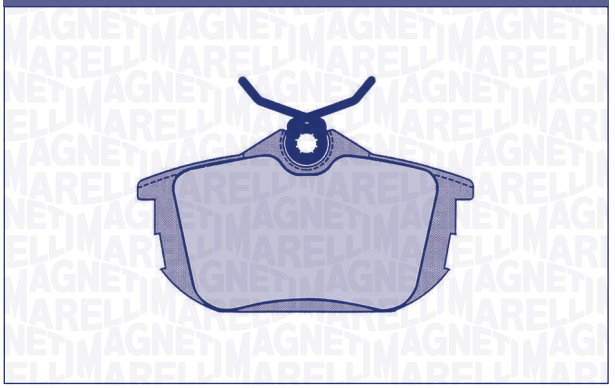

F/R	WVA	W×H×Th (mm)	SiS	Nr. Pz	W.i.	i	Extra kit [Opt]
R	21861	87×47×15	LG	4x	4x	4 segnalatori acustici / 4 acoustic sensor	OK030

MCC (MERCEDES)	
Smart forfour	01/04 →

PF0523

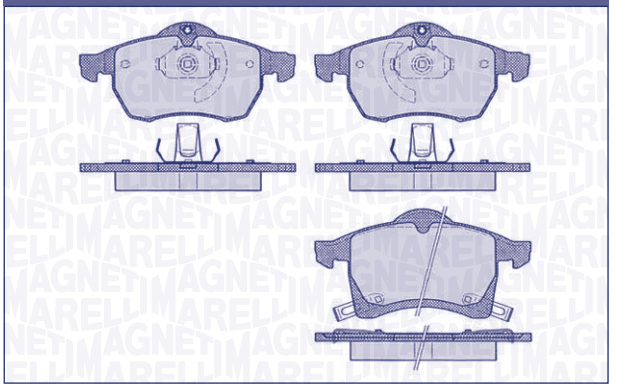

F/R	WVA	W×H×Th (mm)	SiS	Nr. Pz	W.i.	i	Extra kit [Opt]
F	23057 23058 23059	155,4×71,5×19,5 156,4×78,5×19,5	ATE	1x 1x 1x 1x	2x	–	

OPEL	
Astra G	98 →
Astra Cabrio G	01 →
Astra Coupè G	98 →
Astra Van 2.0 Di	08/98 →
Zafira	99 →

PF0524

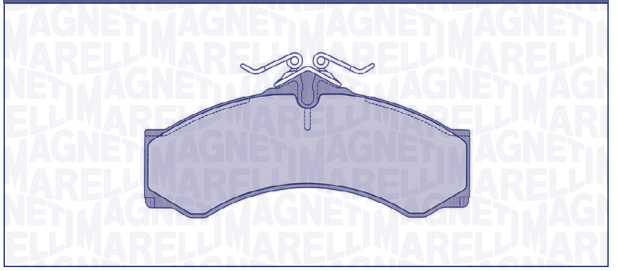

F/R	WVA	W×H×Th (mm)	SiS	Nr. Pz	W.i.	i	Extra kit [Opt]
F/R	29076	164,6×73×20	PT	4x	[-]	kit 4 molle / Kit 4 springs	OK030

MERCEDES	
Sprinter 2-t (901-902)	04/00 →
Sprinter 3-t (903)	95 →
Sprinter 4-t (904)	04/00 →
VOLKSWAGEN	
LT	97 →

PF0525

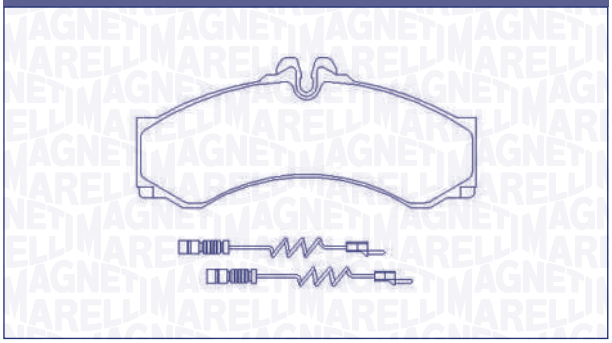

F/R	WVA	W×H×Th (mm)	SiS	Nr. Pz	W.i.	i	Extra kit [Opt]
F/R	29076	164,6×73×20	PT	4x	2x	kit 4 molle / Kit 4 springs / w.i. L=190mm	

MERCEDES	
Sprinter 4-t (904)	04/00 →

PF0526

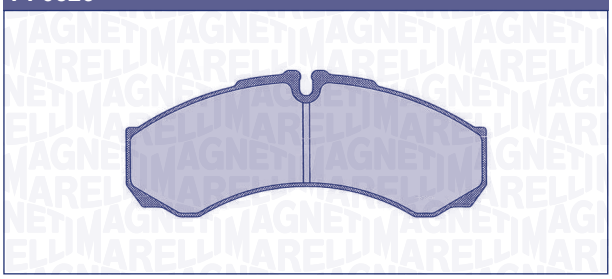

F/R	WVA	W×H×Th (mm)	SiS	Nr. Pz	W.i.	i	Extra kit [Opt]
F	29121	164,6×66,5×17	BR	4x	[-]	–	OK060

IVECO - OM	
Daily II	05/99 →
Daily II S	05/99 →

PF0527

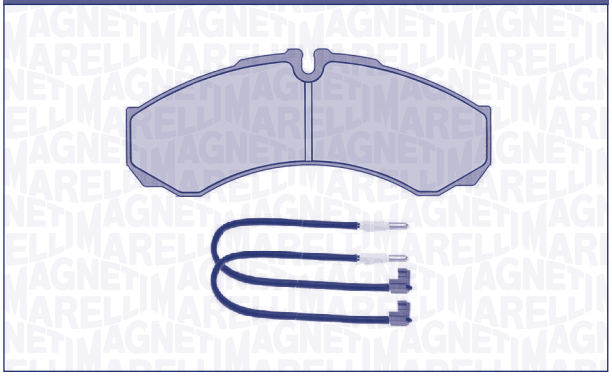

F/R	WVA	W×H×Th (mm)	SiS	Nr. Pz	W.i.	i	Extra kit [Opt]
F	29121	164,6×66,5×20	BR	4x	2x	w.i. L=260mm	OK060

RENAULT	
Mascott	99 →

PF0528

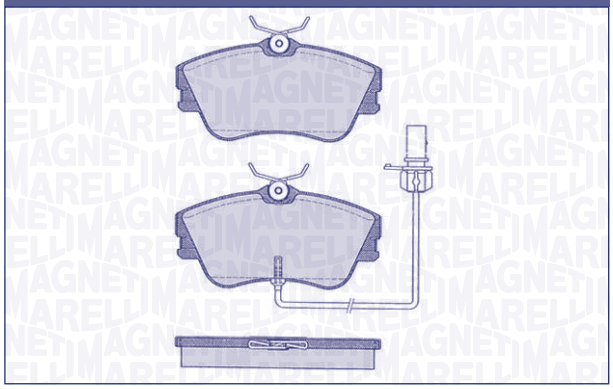

F/R	WVA	W×H×Th (mm)	SiS	Nr. Pz	W.i.	i	Extra kit [Opt]
F	21479 23445	129,9×65,2×19	LG	3x 1x	1x	w.i. L=210mm	OK030

VOLKSWAGEN	
Transporter T4	90 →

PF0529



F/R	WVA	W×H×Th (mm)	SiS	Nr. Pz	W.i.	i	Extra kit [Opt]
R	21748 21882	95×57×17	LG	4x	[-]	–	OK030

VOLKSWAGEN	
Caravelle	90 →
Eurovan T4	90 →
Transporter T4	90 →

PF0530

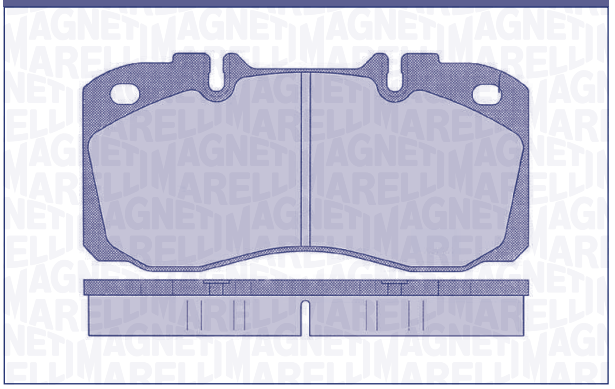

F/R	WVA	W×H×Th (mm)	SiS	Nr. Pz	W.i.	i	Extra kit [Opt]
F/R	29122 29374	174,6×85,3×22	PT	4x	[-]	–	

IVECO - OM	
Daily III	06 →
Eurocargo	04/91 →

PF0531

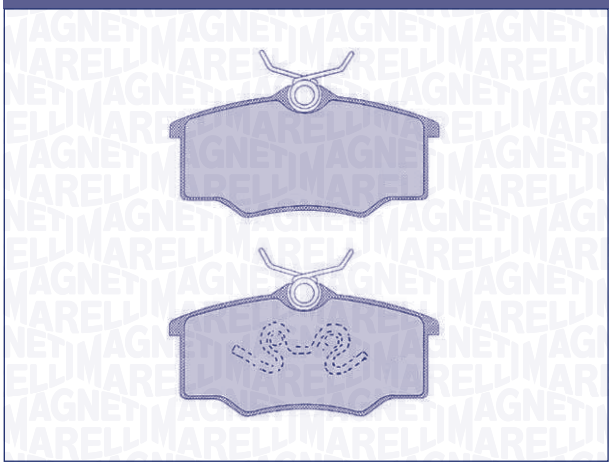

F/R	WVA	W×H×Th (mm)	SiS	Nr. Pz	W.i.	i	Extra kit [Opt]
F	23546 23547	104,2×50,7×16,5	ATE	2x 2x	[-]	–	

OPEL	
Corsa Brasile	93 →
Corsa B	08/99 →

PF0532

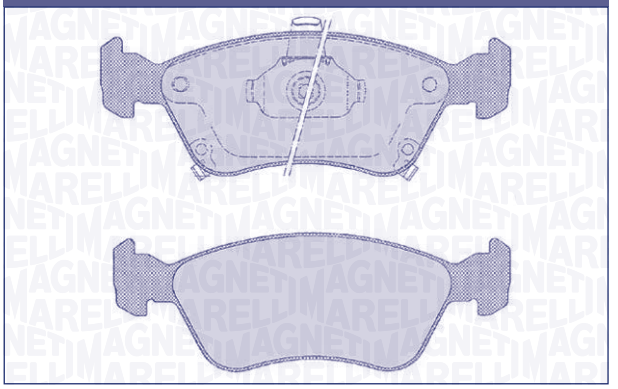

F/R	WVA	W×H×Th (mm)	SiS	Nr. Pz	W.i.	i	Extra kit [Opt]
F	21975 21976 21977	156,4×54,8×18,2	ATE	2x 1x 1x	2x	–	

TOYOTA	
Avensis (AT22_)	98 →
Avensis Verso	00 →

PF0533

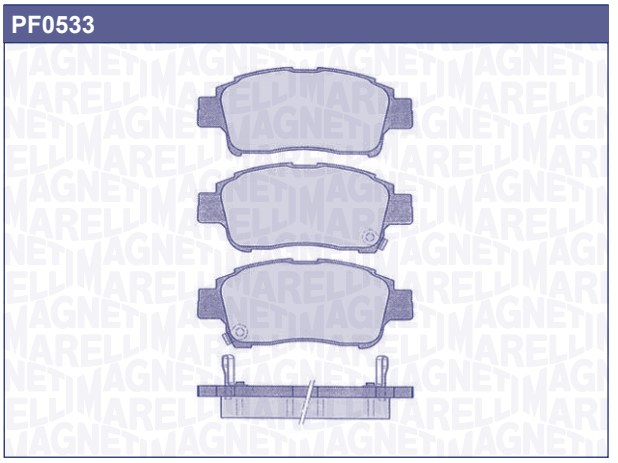

F/R	WVA	W×H×Th (mm)	SiS	Nr. Pz	W.i.	i	Extra kit [Opt]
F	23348 23349 23350	112,5×46,8×16,5	AK	2x 1x 1x	[-]	–	

TOYOTA	
Yaris	00 →

PF0534

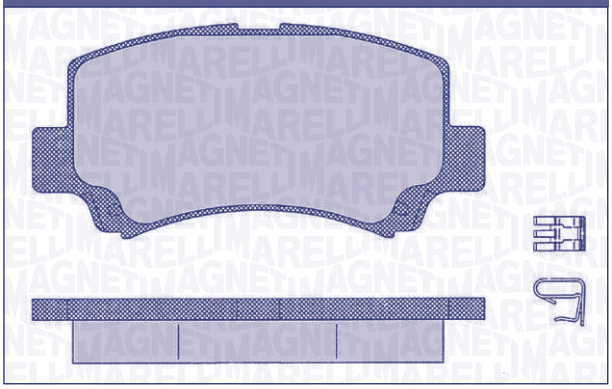

F/R	WVA	W×H×Th (mm)	SiS	Nr. Pz	W.i.	i	Extra kit [Opt]
F	23662	106,4×50,2×15	AK	4x	2x	2 segnalatori acustici / 2 acoustic sensors	

DR	
DR 1	10 →
DR 2	10 →
SUZUKI	
Wagon R+ (EM)	98 →

PF0535

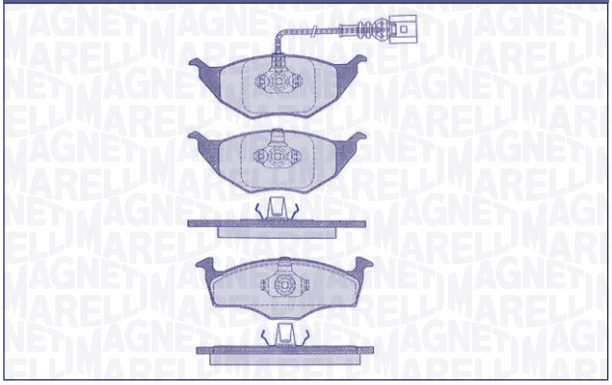

F/R	WVA	W×H×Th (mm)	SiS	Nr. Pz	W.i.	i	Extra kit [Opt]
F	23394 23395	141,8×48,1×14,3 141,8×49,8×14,3	ATE	2x 1x 1x	1x	w.i. L=220mm	

AUDI	
A 2	03/01 →
VOLKSWAGEN	
Lupo	01 →

PF0536

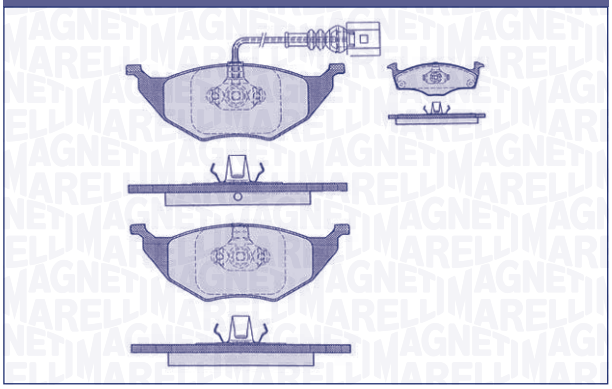

F/R	WVA	W×H×Th (mm)	SiS	Nr. Pz	W.i.	i	Extra kit [Opt]
F	23394 23395 23824	141,8×48,1×14,3 141,8×49,8×14,3	ATE	2x 1x 1x	1x	w.i. L=220mm	

AUDI	
A 2	03/01 →

PF0537

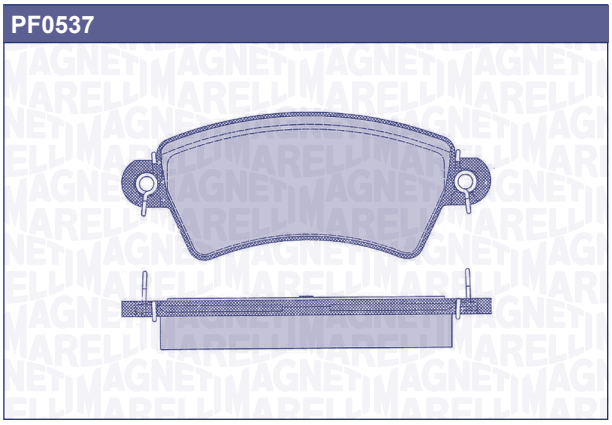

F/R	WVA	W×H×Th (mm)	SiS	Nr. Pz	W.i.	i	Extra kit [Opt]
F	23396	130,9×52,2×17,8	BSC	4x	[-]	–	OK034

CITROËN	
Xsara (+ABS)	00 →
PEUGEOT	
206	98 →
206 CC (2D)	98 →
306	00 →

PF0538

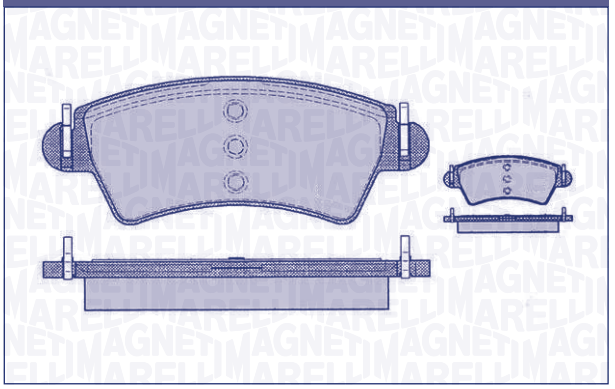

F/R	WVA	W×H×Th (mm)	SiS	Nr. Pz	W.i.	i	Extra kit [Opt]
F	23332 23333	130,9×52,2×18	BSC	2x 2x	[-]	kit 8 molle / Kit 8 springs	OK034

PEUGEOT

206 05/01 →

PF0539

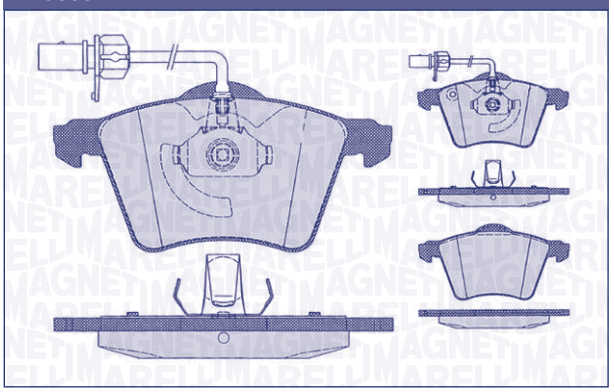

F/R	WVA	W×H×Th (mm)	SiS	Nr. Pz	W.i.	i	Extra kit [Opt]
F	23034 23035 23036	156,4×78,7×19	ATE	2x 1x 1x	2x	w.i. L=200mm	

VOLKSWAGEN

Transporter T4 97 →

PF0540

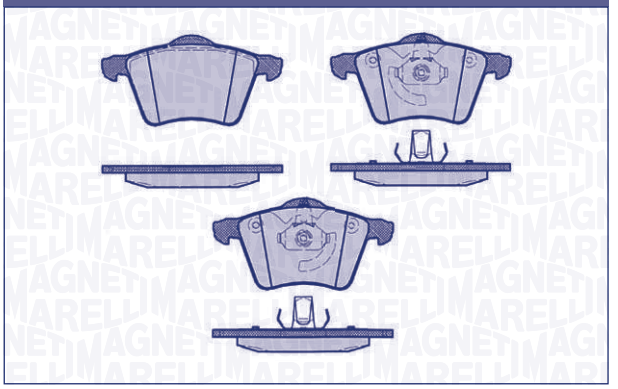

F/R	WVA	W×H×Th (mm)	SiS	Nr. Pz	W.i.	i	Extra kit [Opt]
F	23034 23418 23419	156,4×78,7×19	ATE	2x 1x 1x	[-]	–	

FORD

Galaxy 16" 05/00 →

PF0541

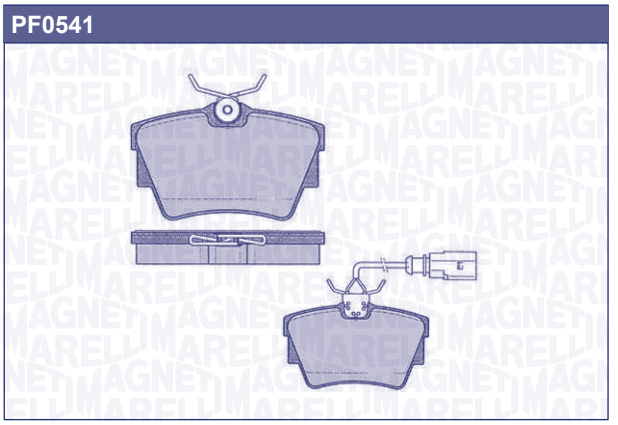

F/R	WVA	W×H×Th (mm)	SiS	Nr. Pz	W.i.	i	Extra kit [Opt]
R	23980	94,9×57,4×16,2	LG	2x 2x	2x	w.i. L=205mm	

VOLKSWAGEN

Caravelle 98 →

Transporter T4 96 →

PF0542

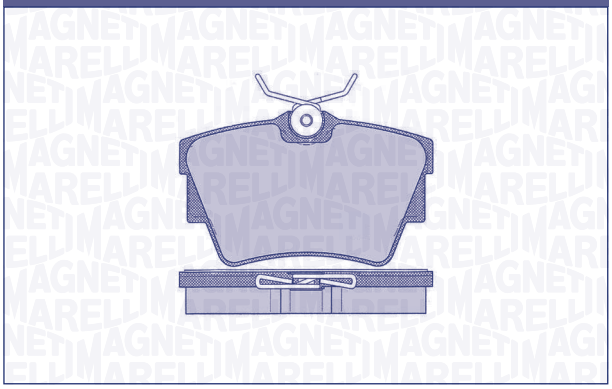

F/R	WVA	W×H×Th (mm)	SiS	Nr. Pz	W.i.	i	Extra kit [Opt]
R	23980	94,9×57,4×16,2	LG	4x	[-]	–	

VOLKSWAGEN	
Caravelle	98 →
Transporter T4	96 →

PF0543

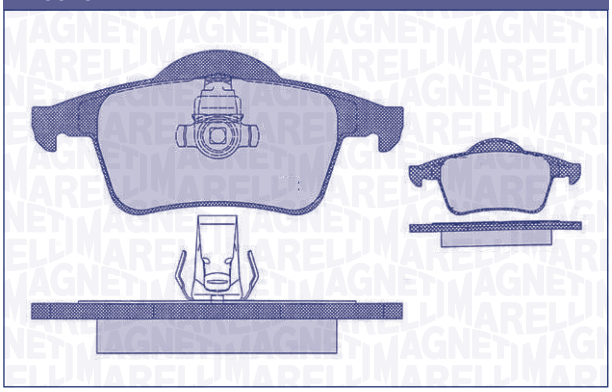

F/R	WVA	W×H×Th (mm)	SiS	Nr. Pz	W.i.	i	Extra kit [Opt]
R	23076 23077	122,6×53,8×17 123,8×53,8×17	ATE	2x 2x	[-]	–	

VOLVO	
S 60	11/00 →
S 80	98 →
V 70	00 →
V 70 II	03/00 →
XC70 Cross Country	00 →
XC90	10/02 →

PF0544

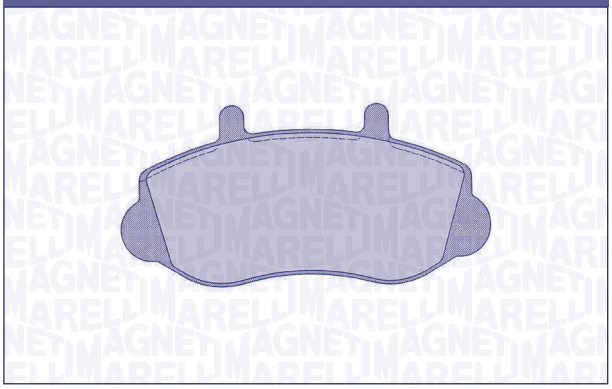

F/R	WVA	W×H×Th (mm)	SiS	Nr. Pz	W.i.	i	Extra kit [Opt]
F	23302	138,7×66,4×18	BD	4x	[-]	–	

OPEL	
Movano	98 →
RENAULT	
Master II	→ 07/00
VAUXHALL	
Movano	00 →

PF0545

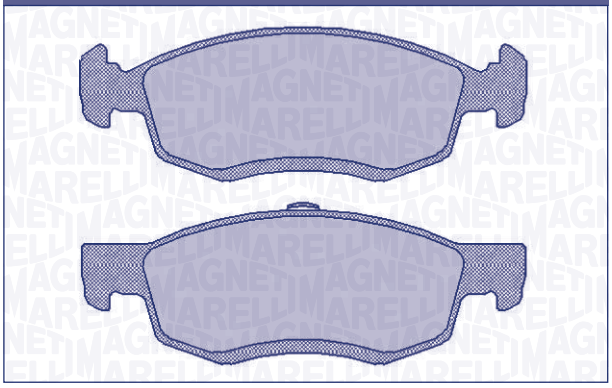

F/R	WVA	W×H×Th (mm)	SiS	Nr. Pz	W.i.	i	Extra kit [Opt]
F	24673 24674	150,3×52,5×17,5 151,3×52,5×17,5	ATE	2x 2x	[-]	–	

DACIA	
Logan SW	02/07 →

PF0546

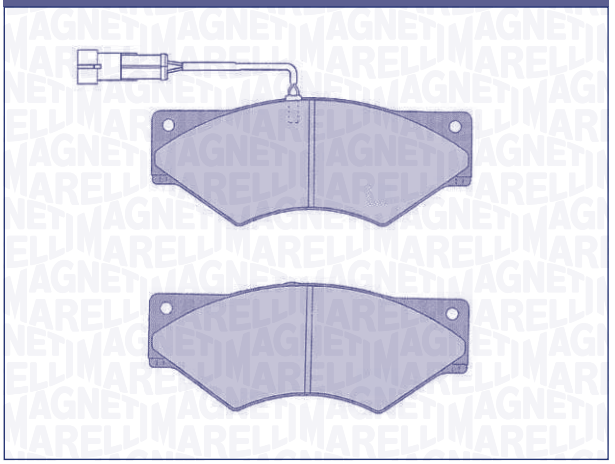

F/R	WVA	W×H×Th (mm)	SiS	Nr. Pz	W.i.	i	Extra kit [Opt]
F	29001	174,3×69,3×20	PT	2x 2x	2x	w.i. L=210mm	

IVECO - OM	
Grinta	90 →

PF0547

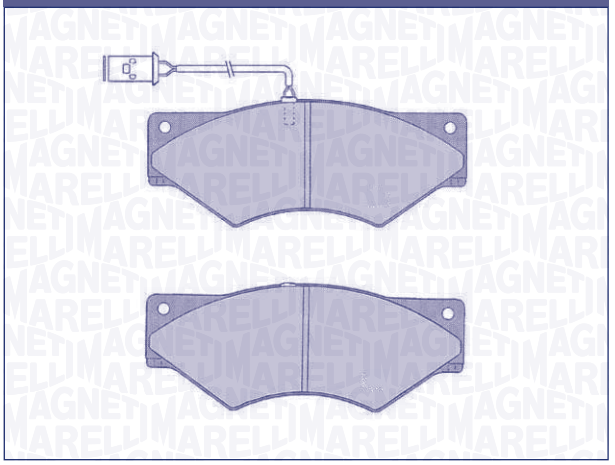

F/R	WVA	W×H×Th (mm)	SiS	Nr. Pz	W.i.	i	Extra kit [Opt]
F	29001 29003	174,3×69,3×20	PT	2x 2x	[-]	w.i. L=240mm	

IVECO - OM	
Daily	92 →
Grinta 59.12	90 →

PF0548

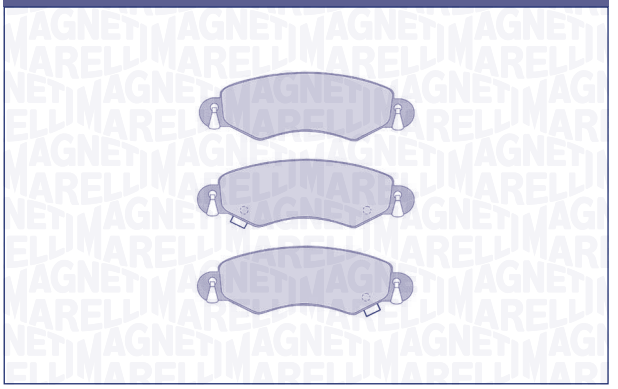

F/R	WVA	W×H×Th (mm)	SiS	Nr. Pz	W.i.	i	Extra kit [Opt]
F	23253 23254 23257	131×44,2×16	BSC	2x 1x 1x	2x	–	

OPEL	
Agila (H00)	00 →
SUZUKI	
Wagon R (MM)	05/00 →

PF0549

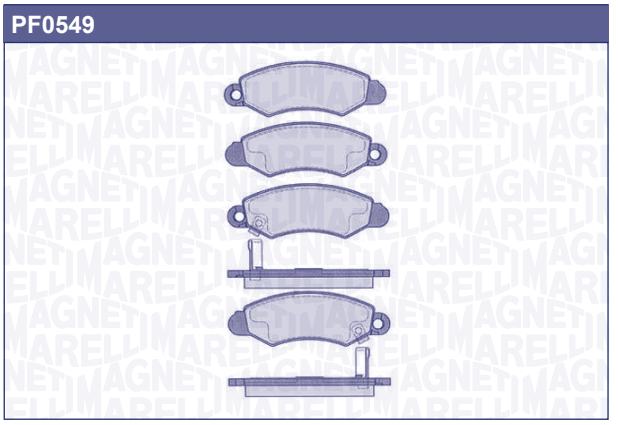

F/R	WVA	W×H×Th (mm)	SiS	Nr. Pz	W.i.	i	Extra kit [Opt]
F	23296 23297 23298 23299	131×44,2×15,5	BSC	1x 1x 1x 1x	2x	–	

SUBARU	
Justy II (JM)	04/01 →
Justy III (G3X)	03 →
SUZUKI	
Swift	98 →

PF0550

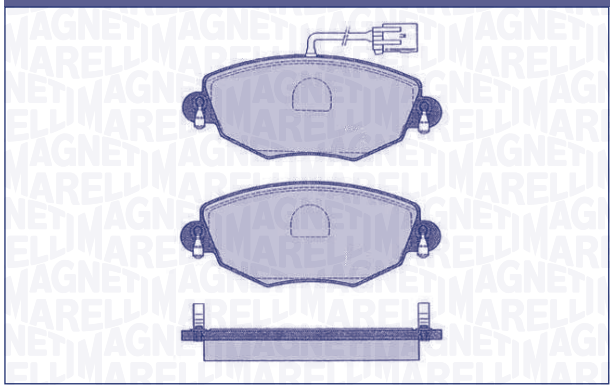

F/R	WVA	W×H×Th (mm)	SiS	Nr. Pz	W.i.	i	Extra kit [Opt]
F	23279 23322	149×60,4×18,5	BSC	2x 2x	2x	w.i. L=155mm	OK033

FORD	
Mondeo II (B5Y)	01 →

PF0551

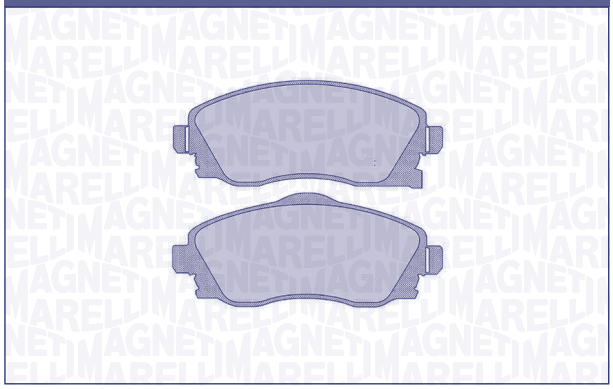

F/R	WVA	W×H×Th (mm)	SiS	Nr. Pz	W.i.	i	Extra kit [Opt]
F	23225 23226	131,8×51,4×17 131,8×55,7×17	LG	2x 2x	2x	2 segnalatori acustici / 2 acoustic sensors / antirumore in confezione / antinoise in the box	OK012/ OK035/ OK036

OPEL	
Corsa C ← tel. 43999999	11/00 →

PF0552

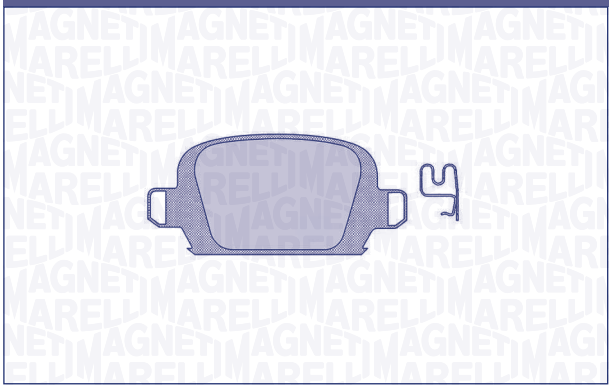

F/R	WVA	W×H×Th (mm)	SiS	Nr. Pz	W.i.	i	Extra kit [Opt]
R	23284	95,8×43,9×14	LG	4x	2x	2 segnalatori acustici / 2 acoustic sensors	OK039/ OK069

OPEL	
Corsa C	11/00 →
Corsa Van	00 →
Tigra Twin Top	04 →

PF0553

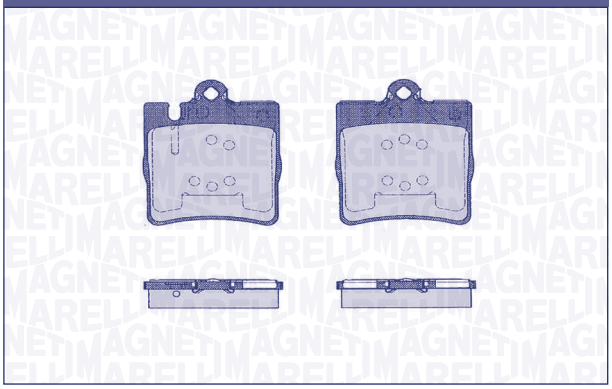

F/R	WVA	W×H×Th (mm)	SiS	Nr. Pz	W.i.	i	Extra kit [Opt]
R	21898 21899	63,7×78,2×15,8	ATE	3x 1x	[o]	4 antirumore in confezione / 4 antinoise in the box	

MERCEDES	
C (203)	00 →
CLK (C209)	06/02 →
CLK Cabriolet (A209)	02/03 →
E (W210)	96 →
E 50 AMG	96 →
SLK (R171)	06/04 →
Sport Coupè C (203)	02 →

PF0554

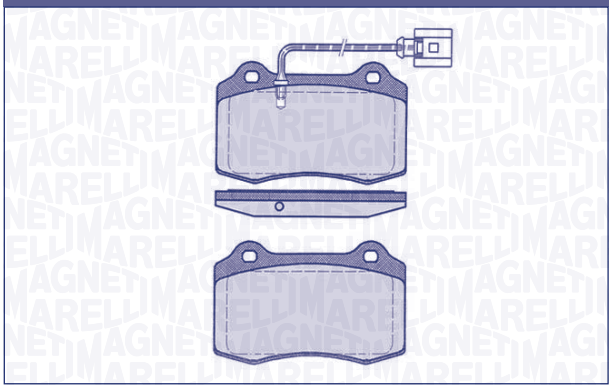

F/R	WVA	W×H×Th (mm)	SiS	Nr. Pz	W.i.	i	Extra kit [Opt]
F	21381 24143	109,7×69,3×15	BR	3x 1x	1x	w.i. L=310mm / antirumore in confezione / antinoise in the box	

SEAT	
Ibiza IV Cupra	04 →
Leon Cupra	05/03 →

PF0555



F/R	WVA	W×H×Th (mm)	SiS	Nr. Pz	W.i.	i	Extra kit [Opt]
F	21381	109,7×69,3×15	BR	4x	[-]	antirumore in confezione / antinoise in the box	

CITROËN	
DS3 Ø Disc 323	10 →
DS3 Cabriolet Ø Disc 323	13 →
JAGUAR	
S-Type	02 →
XJR	07/97 →
SEAT	
Ibiza Cupra (6K1)	04 →

PF0556

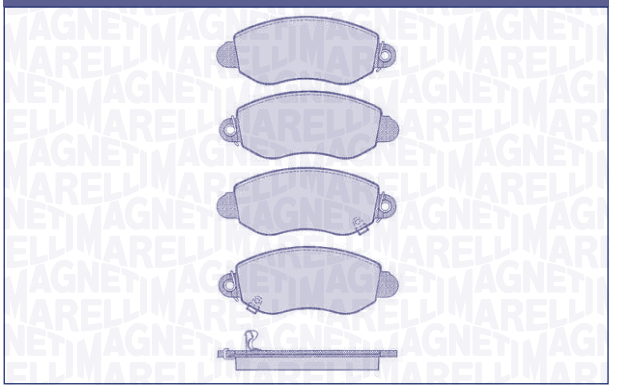

F/R	WVA	W×H×Th (mm)	SiS	Nr. Pz	W.i.	i	Extra kit [Opt]
F	23577 23578 23580	168,8×65,1×18,4	BSC	1x 1x 1x 1x	2x	–	OK012

FORD	
Transit 300 (RWD)	01/00 →

PF0557

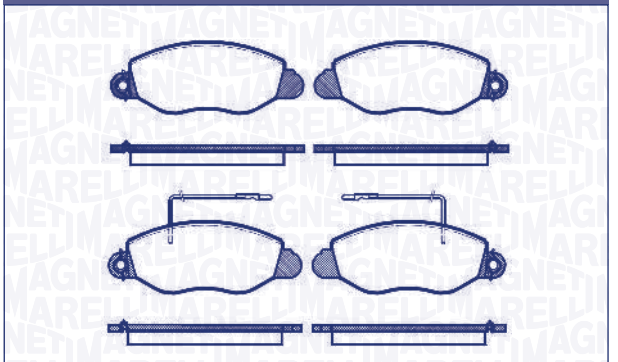

F/R	WVA	W×H×Th (mm)	SiS	Nr. Pz	W.i.	i	Extra kit [Opt]
F	23434 23435 23437	168,5×63,8×18,4	BSC	1x 1x 1x 1x	2x	w.i. L=190mm	OK012

NISSAN	
Cabstar E	10/98 →

PF0558

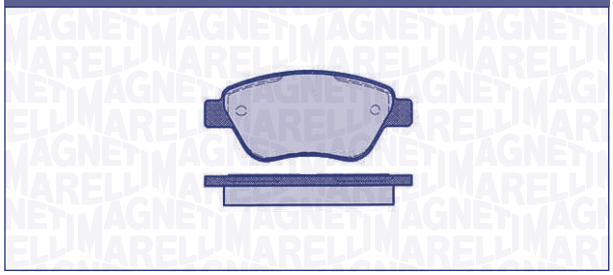

F/R	WVA	W×H×Th (mm)	SiS	Nr. Pz	W.i.	i	Extra kit [Opt]
F	23705	122,9×53,4×18	BSC	4x	[-]	–	OK012

FIAT	
Albea	02 →
Panda II 4x4	01/08 →
Siena (MY02)	02 →
LANCIA	
Musa	04 →

PF0559

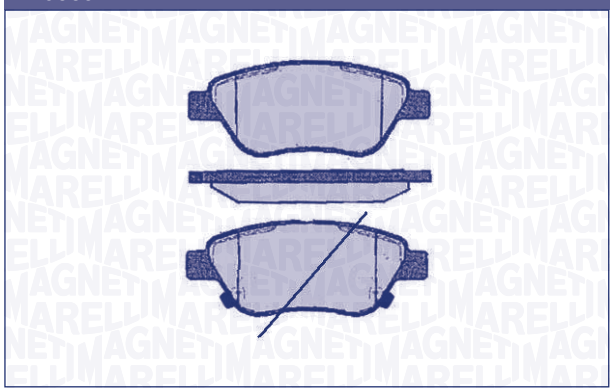

F/R	WVA	W×H×Th (mm)	SiS	Nr. Pz	W.i.	i	Extra kit [Opt]
F	23982 24288	122,9×53,4×18	BSC	2x 1x 1x	2x	–	OK012/ OK040

OPEL	
Adam	10/12 →

PF0560

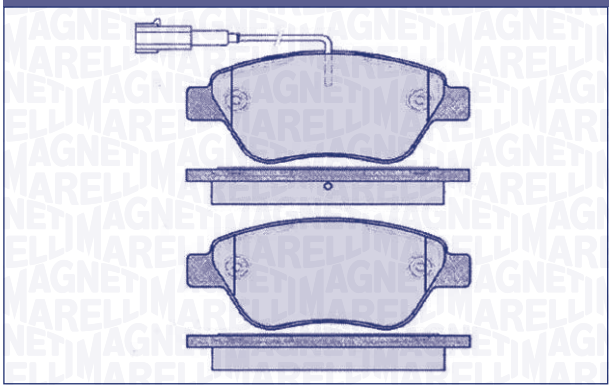

F/R	WVA	W×H×Th (mm)	SiS	Nr. Pz	W.i.	i	Extra kit [Opt]
F	23705 23707	122,9×53,4×18	BSC	2x 2x	2x	w.i. L=210mm	OK012/ OK040/ OK038

CITROËN	
Nemo	02/11 →
FIAT	
Bravo II 1.4 (198)	10 →
Fiorino II (225)	07/09 →
Grande Punto Evo (199)	07/08 →
Grande Punto Evo Van (199)	03/09 →
PEUGEOT	
Bipper (AA)	02/08 →

PF0561



F/R	WVA	W×H×Th (mm)	SiS	Nr. Pz	W.i.	i	Extra kit [Opt]
F	23710	137×57,3×19	BSC	3x 1x	1x	–	OK033/ OK038

OPEL	
Corsa D	06 →

PF0562

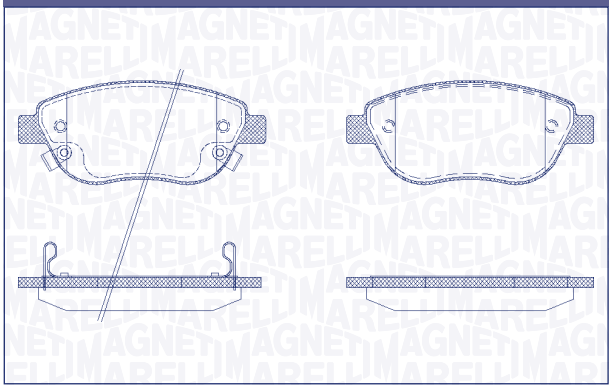

F/R	WVA	W×H×Th (mm)	SiS	Nr. Pz	W.i.	i	Extra kit [Opt]
F	23710 23981 24549	137×57,3×19	BSC	2x 1x 1x	2x	–	OK012/ OK079

FIAT	
500L	10/12 →

PF0563

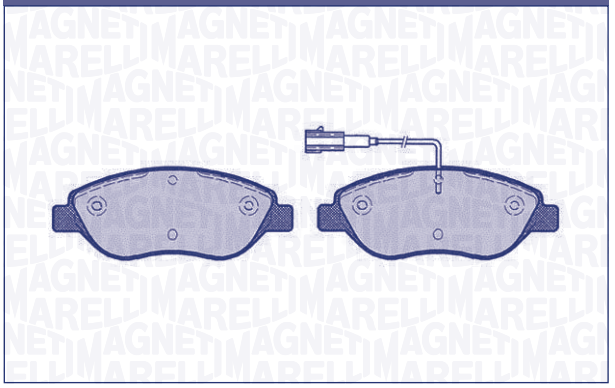

F/R	WVA	W×H×Th (mm)	SiS	Nr. Pz	W.i.	i	Extra kit [Opt]
F	23711 23712 23713	151×57,4×19	BSC	2x 1x 1x	1x	w.i. L=210mm	OK012/ OK038

ALFA ROMEO	
Mito (955)	08/08 →
FIAT	
Bravo II (198)	07 →
Stilo (192)	04 →
LANCIA	
Delta II	07/08 →

PF0564

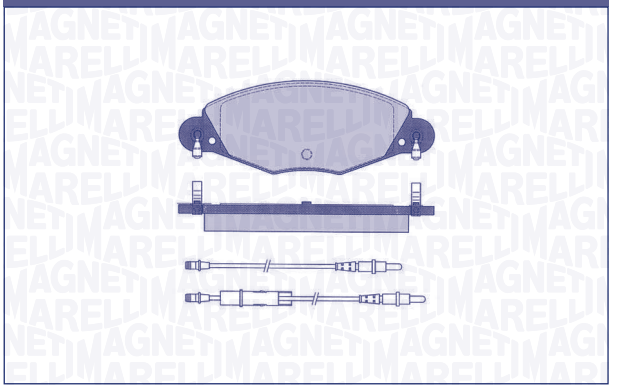

F/R	WVA	W×H×Th (mm)	SiS	Nr. Pz	W.i.	i	Extra kit [Opt]
F	23272 23273	168×61,3×17,8	BSC	4x	4x	w.i. L=2×180/ 2×410mm	OK012

CITROËN	
C5	00 →
C5 II	04 →

PF0565

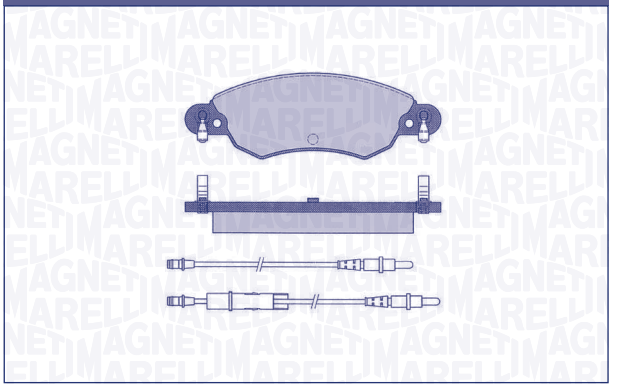

F/R	WVA	W×H×Th (mm)	SiS	Nr. Pz	W.i.	i	Extra kit [Opt]
F	23275 23276	148,8×49,5×17,5	BSC	4x	4x	w.i. L=2×180/ 2×410mm	OK012

CITROËN	
C5	00 →
C5 II	04 →

PF0566

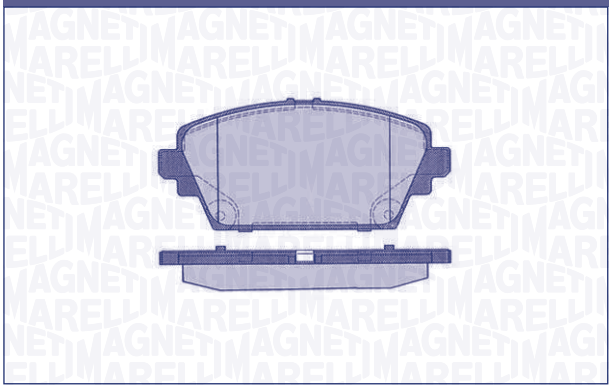

F/R	WVA	W×H×Th (mm)	SiS	Nr. Pz	W.i.	i	Extra kit [Opt]
F	23094 23095	131,7×58,5×17,2	LG	4x	[-]	–	OK033

NISSAN	
Almera Tino	00 →
Primera III	03/02 →

PF0567

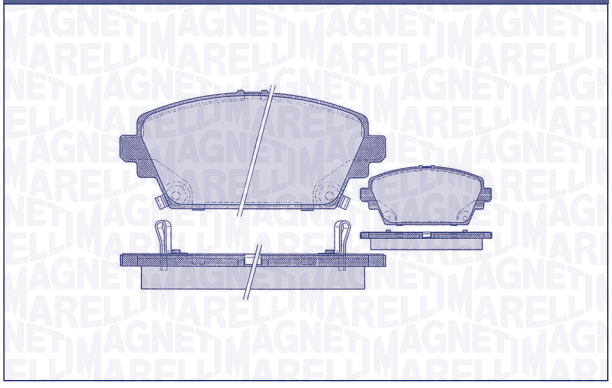

F/R	WVA	W×H×Th (mm)	SiS	Nr. Pz	W.i.	i	Extra kit [Opt]
F	23094 23095 23563 23564	131,7×58,5×17,2	LG	2x 1x 1x	2x	–	OK033

HONDA	
Accord VII (CG)	10/98 →
NISSAN	
Almera Tino	00 →

PF0568

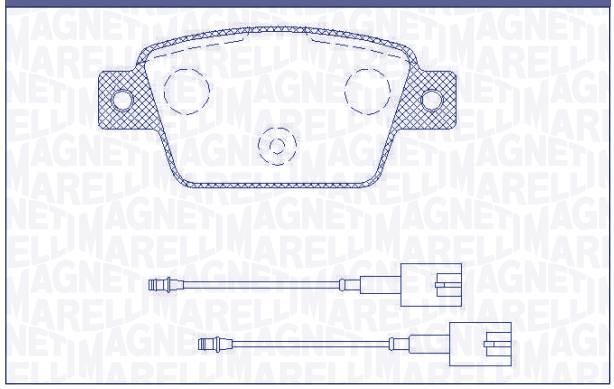

F/R	WVA	W×H×Th (mm)	SiS	Nr. Pz	W.i.	i	Extra kit [Opt]
R	23714	94,9×42,8×17,4	BSC	4x	2x	w.i. L=155mm	OK033/ OK040

FIAT	
Bravo II (198)	07/10 →
LANCIA	
Delta II (844)	07/10 →

PF0569

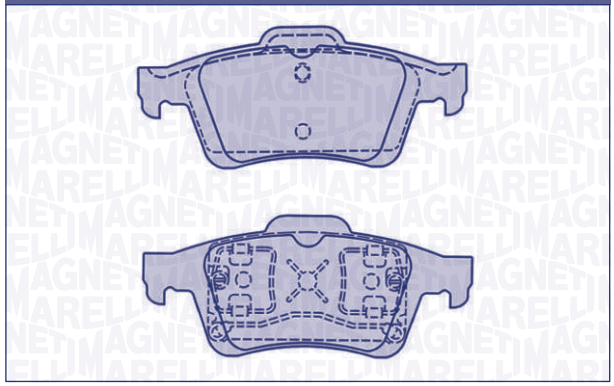

F/R	WVA	W×H×Th (mm)	SiS	Nr. Pz	W.i.	i	Extra kit [Opt]
R	23482	123,1×52×16,4	ATE	2x 2x	[-]	–	

FORD	
Focus II	02/05 →
Focus II Coupe	02/05 →
Focus C-Max	03 →
MAZDA	
3	03 →
5	05 →
VOLVO	
S 40 II	01/04 →
V 50	04 →

PF0570

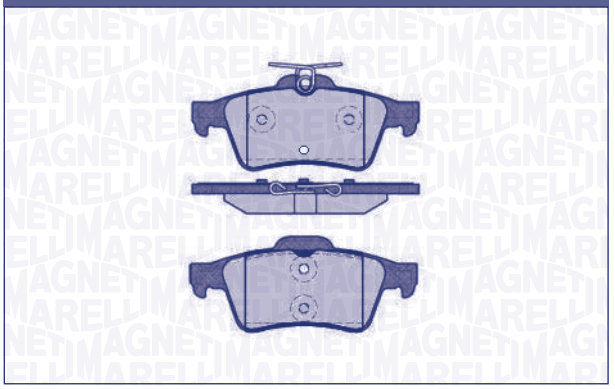

F/R	WVA	W×H×Th (mm)	SiS	Nr. Pz	W.i.	i	Extra kit [Opt]
R	23482 25218	123,1×52×16,4	ATE	2x 2x	[-]	–	

PEUGEOT	
508 (+HB El.)	11/10 →
508 SW (+HB El.)	11/10 →

PF0571

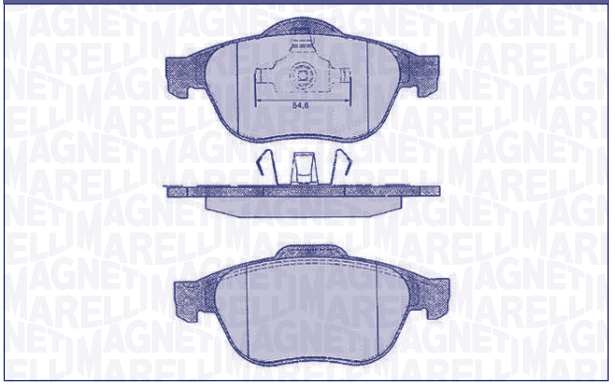

F/R	WVA	W×H×Th (mm)	SiS	Nr. Pz	W.i.	i	Extra kit [Opt]
F	23245 23248	155,2×68,5×18,2 156,5×71×18,2	ATE	2x 2x	[-]	–	OK087

RENAULT	
Espace IV	11/02 →
Laguna III BN (B74)	01 →
Laguna III SW (K74)	01 →
Vel Satis	02 →

PF0572

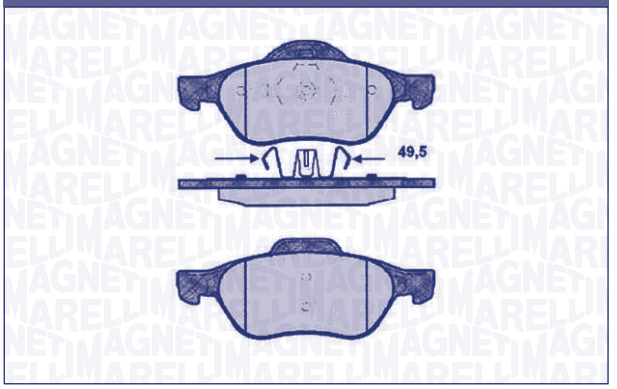

F/R	WVA	W×H×Th (mm)	SiS	Nr. Pz	W.i.	i	Extra kit [Opt]
F	23245	155,2×68,5×18,2 156,5×71×18,2	ATE	2x 2x	[-]	–	OK087

RENAULT	
Megane Scenic II (JM)	10/05 →
Gran Scenic II	10/05 →

PF0573

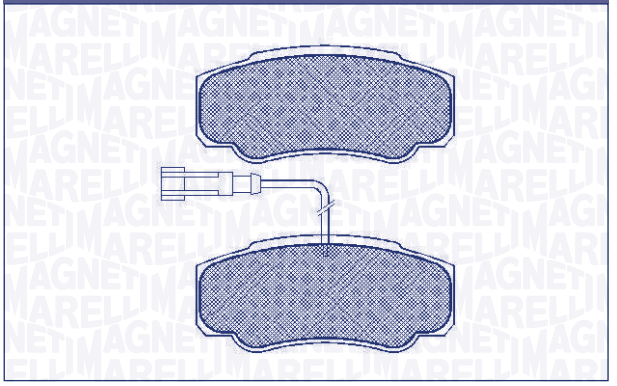

F/R	WVA	W×H×Th (mm)	SiS	Nr. Pz	W.i.	i	Extra kit [Opt]
R	23921 24589	109,7×49,6×20	BR	2x 2x	2x	w.i. L=250mm	OK060/ OK014

NISSAN	
Cabstar	10/06 →
RENAULT	
Maxity	07 →

PF0574

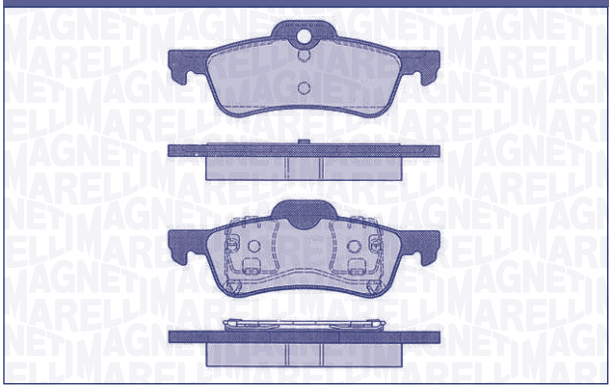

F/R	WVA	W×H×Th (mm)	SiS	Nr. Pz	W.i.	i	Extra kit [Opt]
R	23716 23717	123,2×43,8×16,1	ATE	2x 2x	[-]	–	

MINI (BMW)	
One	01 →
Cooper One	01 →
Cooper One S	03/02 →

PF0575

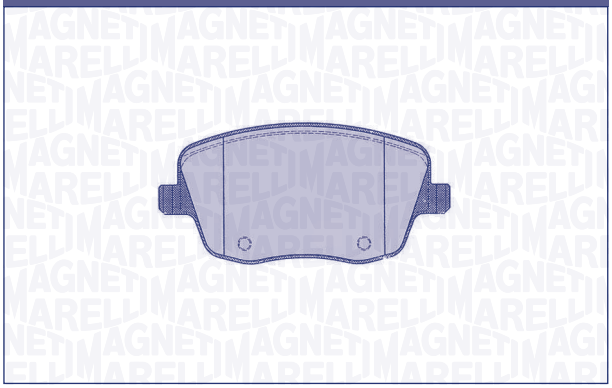

F/R	WVA	W×H×Th (mm)	SiS	Nr. Pz	W.i.	i	Extra kit [Opt]
F	23581	131,5×62,7×18,8	LG	4x	[-]	–	OK033/ OK077

SKODA	
Fabia II (6Y)	00 →

PF0576

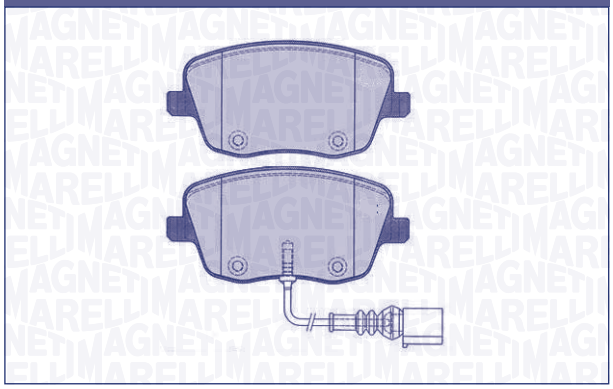

F/R	WVA	W×H×Th (mm)	SiS	Nr. Pz	W.i.	i	Extra kit [Opt]
F	23581 23843	131,5×62,7×18,8	LG	3x 1x	1x	w.i. L=155mm	OK033/ OK077

SEAT	
Cordoba II (6L2)	02 →
Ibiza IV (6L1)	02/02 →
SKODA	
Fabia II RS (6Y)	03 →
Fabia II (6Y)	01 →
Fabia III	03/07 →
Fabia SW Combi	10/07 →
Roomster	06 →
VOLKSWAGEN	
Polo IV (9N)	03 →

PF0577

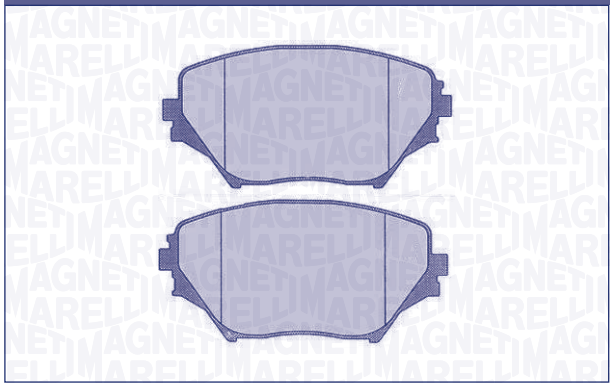

F/R	WVA	W×H×Th (mm)	SiS	Nr. Pz	W.i.	i	Extra kit [Opt]
F	23585 23586	123×60,3×17,5	AK	2x 2x	[-]	–	

TOYOTA	
Rav4 II	00 →

PF0578

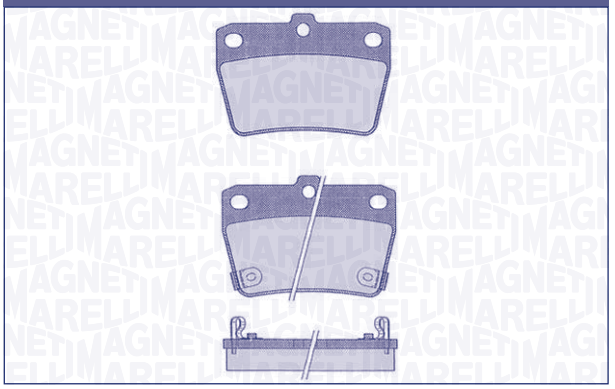

F/R	WVA	W×H×Th (mm)	SiS	Nr. Pz	W.i.	i	Extra kit [Opt]
R	23656 23657 23658	78,3×54,1×14	AK	2x 1x 1x	2x	–	

DR	
DR5	07→

TOYOTA	
Rav4 II	00→

PF0579

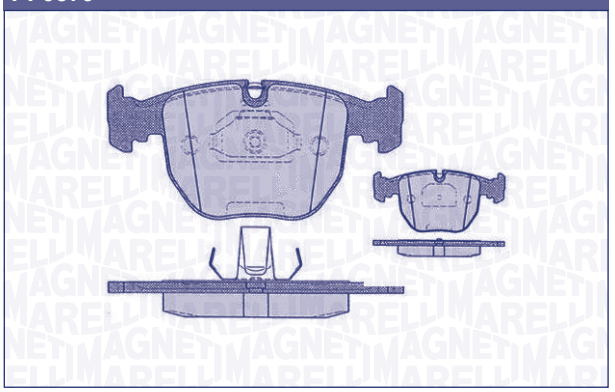

F/R	WVA	W×H×Th (mm)	SiS	Nr. Pz	W.i.	i	Extra kit [Opt]
F	21486 21642 23398	156,5×73,2×19,3	ATE	2x 2x	[o]	–	

BMW	
5 (E39)	95→
7 (E38)	93→
M5	98→
Z8 (E31)	00→
X5 (E53)	00→

PF0580

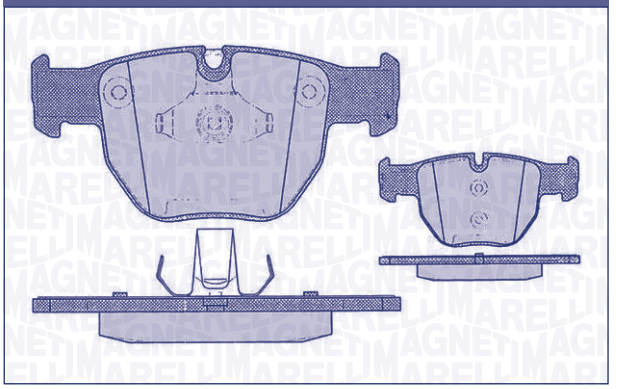

F/R	WVA	W×H×Th (mm)	SiS	Nr. Pz	W.i.	i	Extra kit [Opt]
F	23397 23399	155,4×73,5×19 156,4×73,5×19	ATE	2x 2x	[o]	–	

LAND ROVER	
Range Rover III	02/02→

PF0581

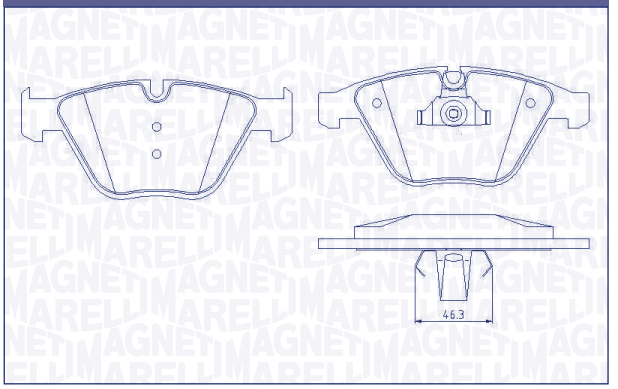

F/R	WVA	W×H×Th (mm)	SiS	Nr. Pz	W.i.	i	Extra kit [Opt]
F	24689	155,1×68,3×20,2	ATE	2x 2x	[-]	–	

BMW	
3 (E90)	01/05→
3 (E92) Coupè	01/05→
3 (E93) Cabriolet	03/07→
Z4 (E89) sDrive	05/09→
Z4 (E89) sDrive	10→
X1 (E84)	10/09→

PF0582

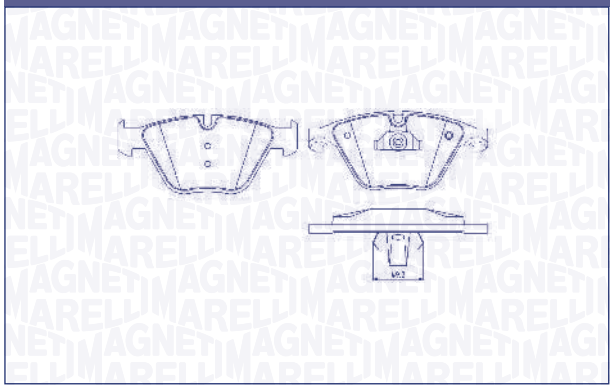

F/R	WVA	W×H×Th (mm)	SiS	Nr. Pz	W.i.	i	Extra kit [Opt]
F	25437 25436	154,2×68,3×20,2	ATE	2x 2x	[-]	–	

BMW	
5 Gran turismo (F07)	10/09 →
5 (F10)	03/10 →
5 Touring (F11)	09/10 →
6 Convertibile (F12)	03/11 →
6 Coupè (F13)	03/11 →
7 (F01_F02)	11/01 →

PF0583

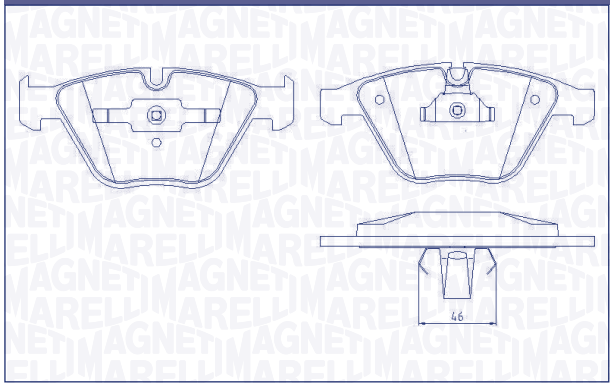

F/R	WVA	W×H×Th (mm)	SiS	Nr. Pz	W.i.	i	Extra kit [Opt]
F	23347 24161	155,1×68,3×20,2	ATE	2x 2x	[-]	–	

BMW	
3 (E93) Cabriolet	03/07 →
Z4 (E89) sDrive	05/09 →

PF0584

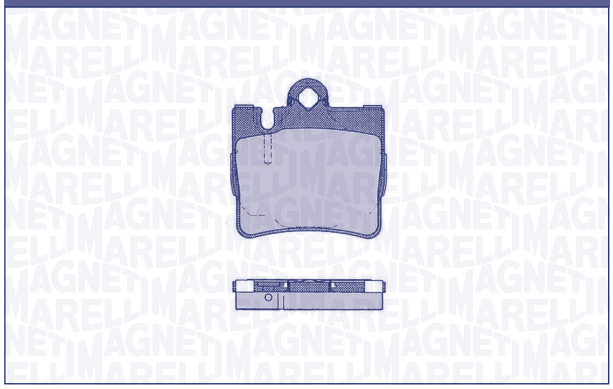

F/R	WVA	W×H×Th (mm)	SiS	Nr. Pz	W.i.	i	Extra kit [Opt]
R	23078	69×72×16	ATE	4x	[o]	4 antirumore in confezione / 4 antinoise in the box	

MERCEDES	
S (W220)	98 →
S/CL Coupè (C215)	03/99 →

PF0585

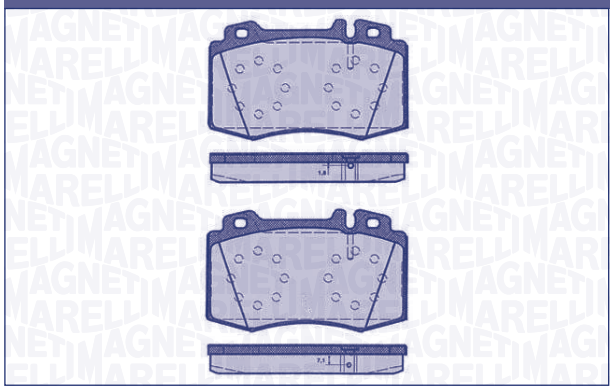

F/R	WVA	W×H×Th (mm)	SiS	Nr. Pz	W.i.	i	Extra kit [Opt]
F	23271 23745	119,8×71,6×17,2	BR	2x 2x	[o]	–	

MERCEDES	
C (203) AMG	01/03 →
CLK (C209)	05/02 →
CLK Cabriolet (A209)	05/03 →
CLS (C219)	10/04 →
E (W211)	03/02 →
E (S211)	03/03 →
SL (R230)	03/03 →
S (W220)	01/02 →
Sport Coupè C AMG (203)	02 →

PF0586

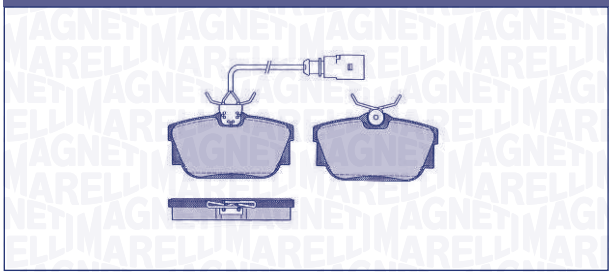

F/R	WVA	W×H×Th (mm)	SiS	Nr. Pz	W.i.	i	Extra kit [Opt]
R	23224 23446	94,9×51×16,2	LG	3x 1x	1x	w.i. L=205mm	OK032

VOLKSWAGEN	
Transporter T4	00 →

PF0587

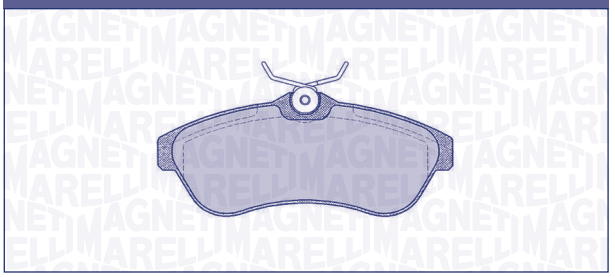

F/R	WVA	W×H×Th (mm)	SiS	Nr. Pz	W.i.	i	Extra kit [Opt]
F	23408 23409	128,9×56,2×19,3	LG	4x	[-]	–	OK032

CITROËN	
C2	03 →
C3	02 →
C3 Pluriel	05/03 →
C3 XTR	04 →
C3 XTR City Suv	04 →

PF0588

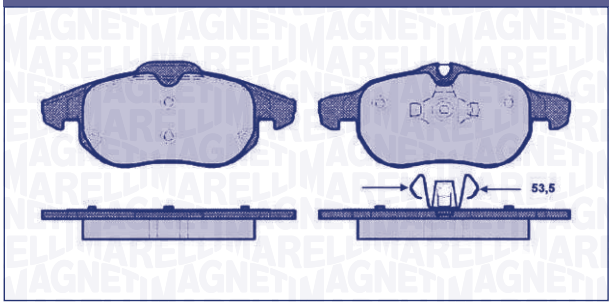

F/R	WVA	W×H×Th (mm)	SiS	Nr. Pz	W.i.	i	Extra kit [Opt]
F	23805	155,2×69×20,2 156,4×71,1×20,2	ATE	2x 2x	[o]	–	

FIAT	
Croma II (194)	03/06 →

PF0589

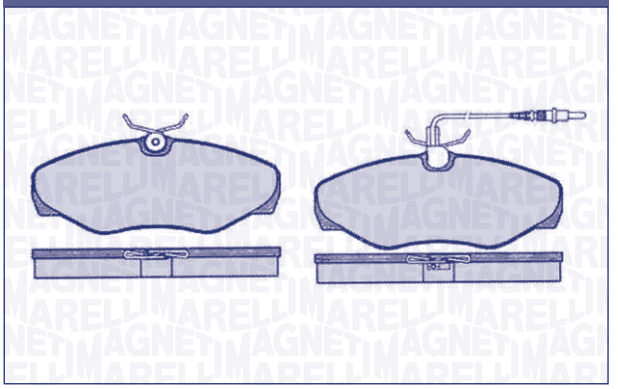

F/R	WVA	W×H×Th (mm)	SiS	Nr. Pz	W.i.	i	Extra kit [Opt]
F	23099 23100	145,1×62,5×18,2	LG	3x 1x	1x	w.i. L=270mm	OK037

RENAULT	
Avantime	01 →
Espace III (JE)	98 →

PF0590

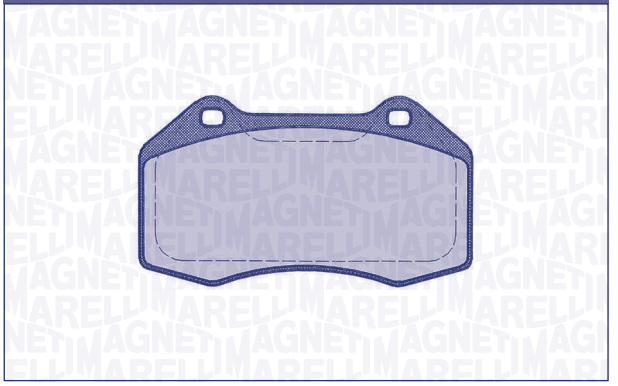

F/R	WVA	W×H×Th (mm)	SiS	Nr. Pz	W.i.	i	Extra kit [Opt]
F	24162	124,8×70,8×15,1	BR	4x	[-]	antirumore in confezione / antinoise in the box	

RENAULT	
Clio IV Sport	02/06 →
Clio V Sport	08 →
Megane II Sport	03/04 →

PF0591

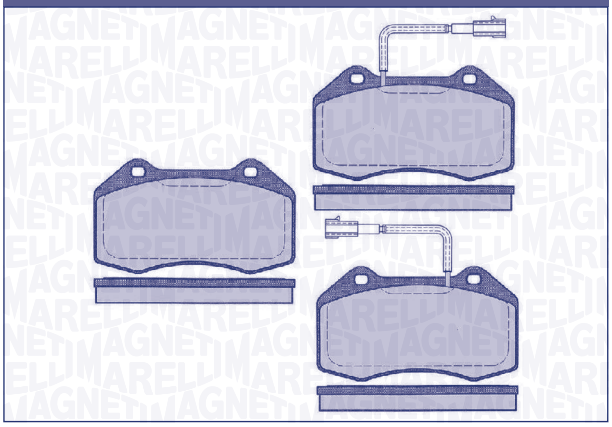

F/R	WVA	W×H×Th (mm)	SiS	Nr. Pz	W.i.	i	Extra kit [Opt]
F	24162 24687 25225	124,7×70,7×15,1	BR	2x 1x 1x	2x	w.i. L=150mm / antirumore in confezione / antinoise in the box	

ABARTH	
500 (169)	08/08 →
G. Punto Evo (199)	08/08 →
ALFA ROMEO	
4C	13 →
Mito Turbo 170cv	08/08 →
FIAT	
500 Abarth (169)	08/08 →
G. Punto Evo Abarth (199)	08/08 →

PF0592

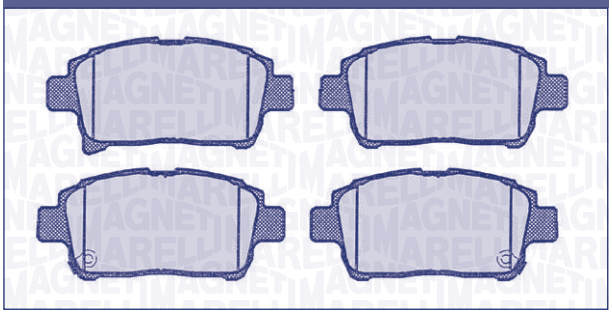

F/R	WVA	W×H×Th (mm)	SiS	Nr. Pz	W.i.	i	Extra kit [Opt]
F	23510 23511 23512 23904	116,4×51,4×16,5	AK	1x 1x 1x 1x	2x	antirumore in confezione / antinoise in the box	

TOYOTA	
Celica (ZZT)	11/99 →
Yaris	08/99 →
Yaris Verso	08/99 →
MR2 (ZZW3)	12/99 →
Prius I/Prius II	05/00 →

PF0593

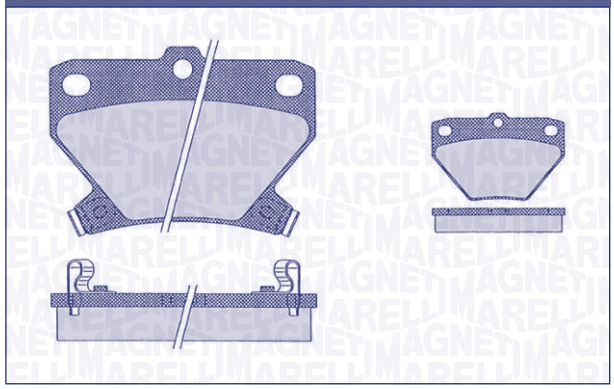

F/R	WVA	W×H×Th (mm)	SiS	Nr. Pz	W.i.	i	Extra kit [Opt]
R	23521 23522 23523	78,5×51,9×14 78,5×55,4×14	AK	2x 1x 1x	2x	–	

TOYOTA	
Celica (ZZT)	11/99 →
Corolla (E12U)	01/02 →
Corolla MPV (E12J)	01/02 →
Yaris	08/99 →
Yaris Verso	08/99 →
Prius I/Prius II	05/00 →

PF0594

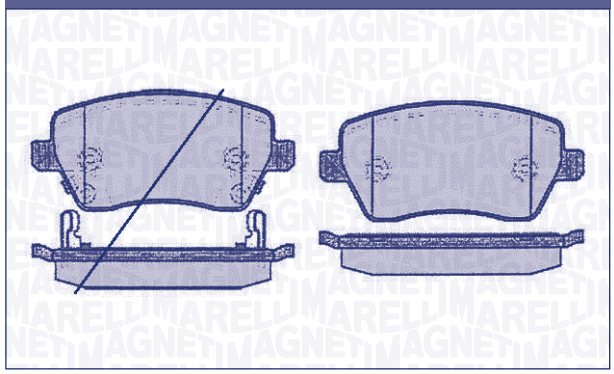

F/R	WVA	W×H×Th (mm)	SiS	Nr. Pz	W.i.	i	Extra kit [Opt]
F	23973 24403 25261	116,5×52,4×17	LG	2x 1x 1x	2x	–	

NISSAN	
Micra III (K13)	05/10 →
Note	13 →

PF0595

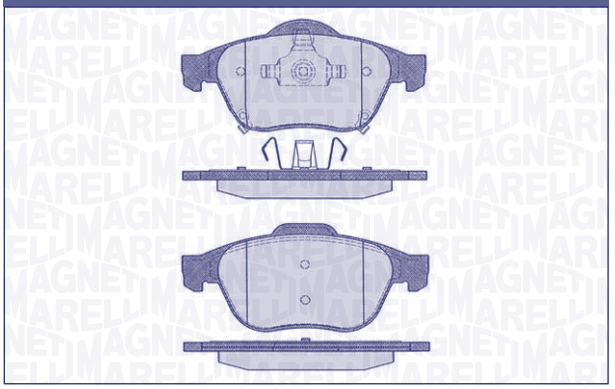

F/R	WVA	W×H×Th (mm)	SiS	Nr. Pz	W.i.	i	Extra kit [Opt]
F	23996 23998 24009	155,2×68,7×18,3 156,6×71,2×18,3	ATE	2x 1x 1x	2x	–	

TOYOTA	
Avensis (ZZT22_)	07/01 →

PF0596

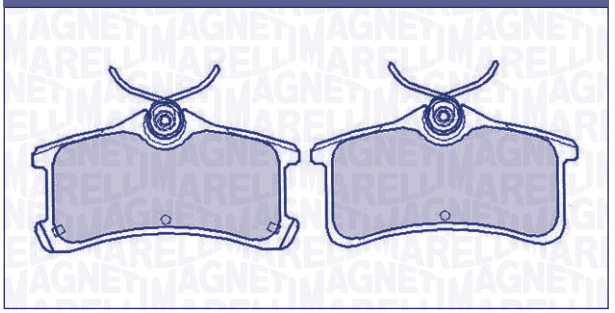

F/R	WVA	W×H×Th (mm)	SiS	Nr. Pz	W.i.	i	Extra kit [Opt]
R	24013 24020	87,1×47,1×15,5 87,1×48,7×15,5	LG	2x 2x	[-]	–	

TOYOTA	
Avensis (ZZT22_)	07/01 →

PF0597

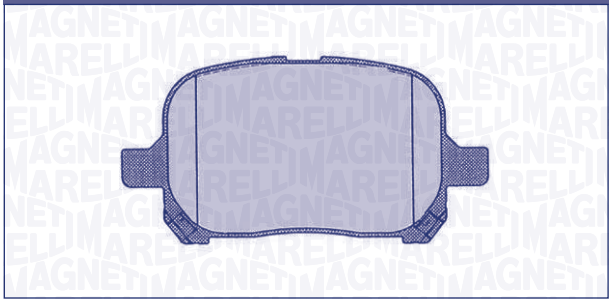

F/R	WVA	W×H×Th (mm)	SiS	Nr. Pz	W.i.	i	Extra kit [Opt]
F	23836	122,9×59,5×17	AK	4x	[-]	–	

TOYOTA	
Avensis Verso	05/01 →

PF0598

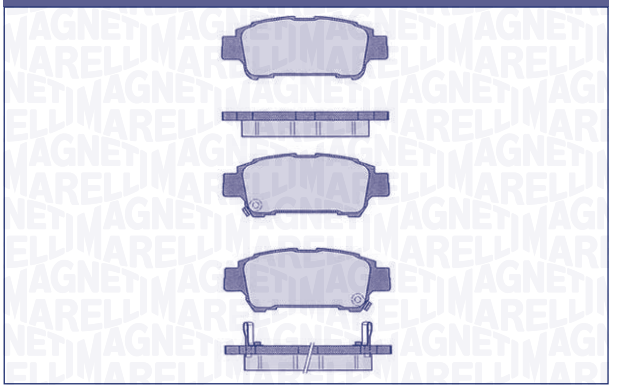

F/R	WVA	W×H×Th (mm)	SiS	Nr. Pz	W.i.	i	Extra kit [Opt]
R	23646 23647 23648	112,5×43×16,5	ST	2x 1x 1x	2x	–	

TOYOTA	
Avensis Verso	05/01 →
Previa (ACR3.)	00 →

PF0599

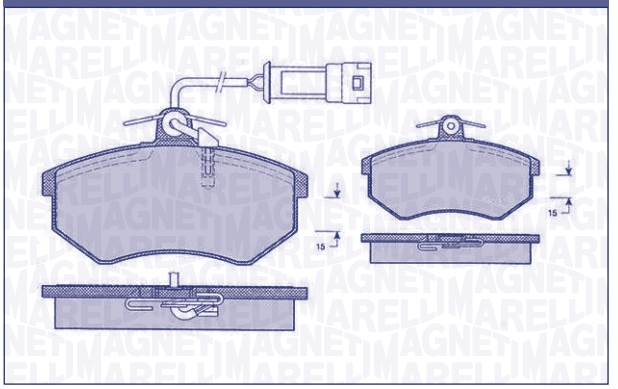

F/R	WVA	W×H×Th (mm)	SiS	Nr. Pz	W.i.	i	Extra kit [Opt]
F	20669	119,2×69,5×17,9	LG	2x 2x	2x	–	OK032

DR	
DR5	07 →

PF0600

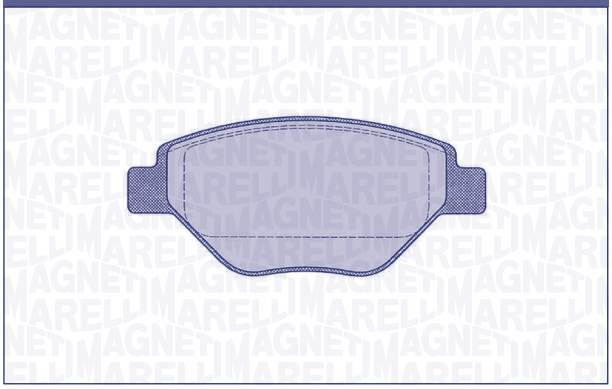

F/R	WVA	W×H×Th (mm)	SiS	Nr. Pz	W.i.	i	Extra kit [Opt]
F	23934	122,9×54,3×18,3	BSC	4x	[-]	–	OK012/ OK038

RENALT	
Megane II 1.4 (72kw)	12/02 →

PF0601

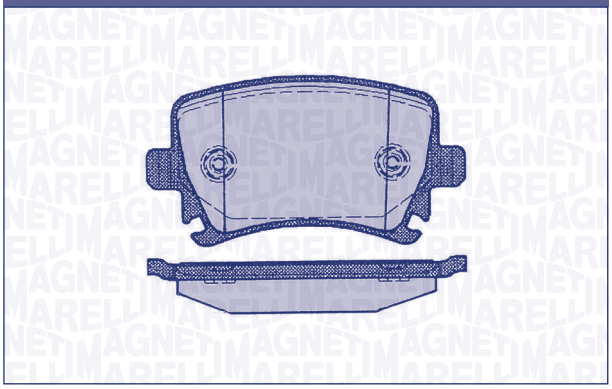

F/R	WVA	W×H×Th (mm)	SiS	Nr. Pz	W.i.	i	Extra kit [Opt]
R	23914	105,5×56×16,7	LG	4x	[-]	–	OK039/ OK085/ OK086

AUDI	
A 6 III	04/04 →
TT (8J) II/Roadster	06 →
SEAT	
Toledo III	10/04 →
VOLKSWAGEN	
CC (358)	11 →
Golf V	11/05 →
Jetta III/IV (5K)	08/06 →
Passat III	06/05 →
Passat Passat AllTrack (365)	01/12 →
Scirocco II (1K)	10/08 →

PF0602

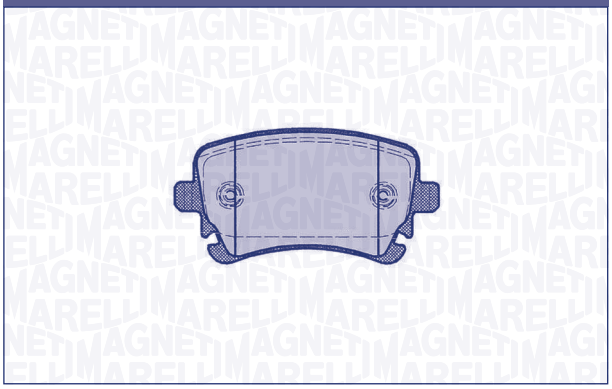

F/R	WVA	W×H×Th (mm)	SiS	Nr. Pz	W.i.	i	Extra kit [Opt]
R	23882	116,2×59×17,5	LG	4x	[-]	–	OK039/ OK091

AUDI	
A 6 III (4F)	04/04 →
A 6 III Allroad (4FH)	05/06 →

PF0603

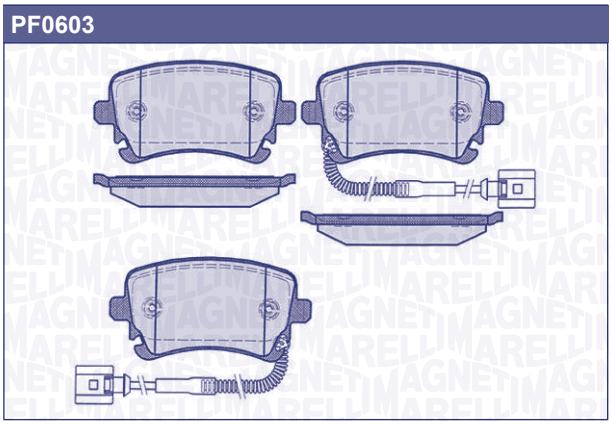

F/R	WVA	W×H×Th (mm)	SiS	Nr. Pz	W.i.	i	Extra kit [Opt]
R	23326	116,2×59×17,5	LG	4x	2x	w.i. L=635mm	OK039/ OK091

AUDI	
A 4 II Quattro (8E)	01/05 →
A 4 II RS4 Quattro (8E)	05 →
A 4 II S4 Quattro (8E)	03 →
A 6 II RS6 (4B)	07/02 →
A 8 II (4E)	10/02 →
VOLKSWAGEN	
Phaeton (3D)	04/02 →

PF0604

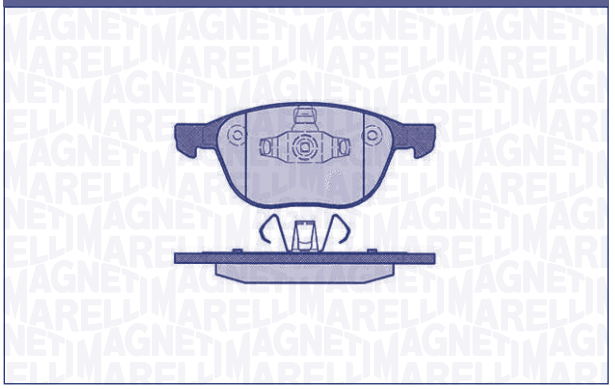

F/R	WVA	W×H×Th (mm)	SiS	Nr. Pz	W.i.	i	Extra kit [Opt]
F	25748	155,2×62,3×18 155×67×18	ATE	2x 2x	[-]	–	

FORD	
Kuga II	03/13 →

PF0605

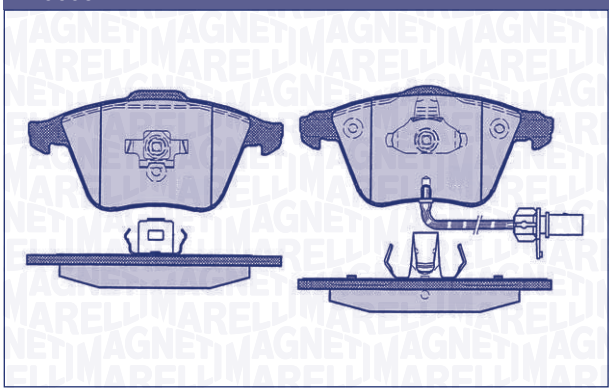

F/R	WVA	W×H×Th (mm)	SiS	Nr. Pz	W.i.	i	Extra kit [Opt]
F	23801 23913	156,5×72,9×20 155,3×72,9×20	ATE	2x 2x	2x	w.i. L=200mm	

AUDI	
Allroad (4BH)	05/00 →
A 6 II	08/01 →
A 6 III	04/04 →
VOLKSWAGEN	
Passat III SW	08/05 →

PF0606



F/R	WVA	W×H×Th (mm)	SiS	Nr. Pz	W.i.	i	Extra kit [Opt]
F	23801 23912	156,5×72,9×20 155,3×72,9×20	ATE	2x 1x 1x	1x	w.i. L=210mm	

SKODA	
Superb II (1K_5K)	07/08 →
VOLKSWAGEN	
Eos	03/06 →
Passat CC	06/08 →

PF0607

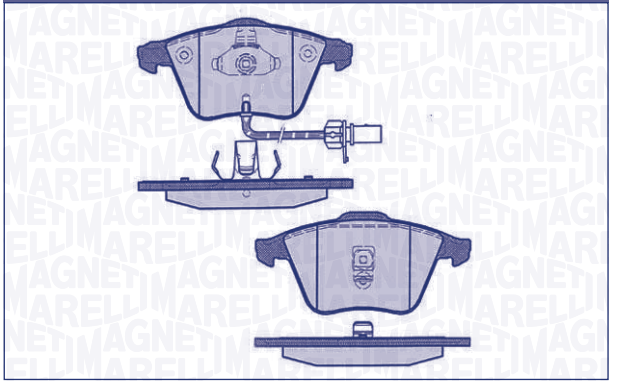

F/R	WVA	W×H×Th (mm)	SiS	Nr. Pz	W.i.	i	Extra kit [Opt]
F	23762	156,5×72,9×20 155,3×72,9×20	ATE	2x 2x	2x	w.i. L=200mm	

AUDI	
Allroad (4BH)	05/00 →
A 4 Cabrio (8H)	04/02 →
A 6 II (4B)	01/97 →

PF0608

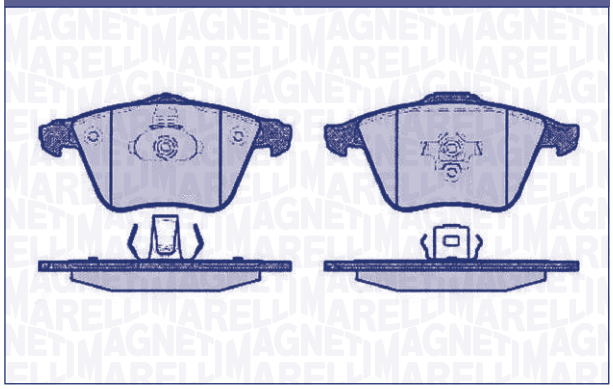

F/R	WVA	W×H×Th (mm)	SiS	Nr. Pz	W.i.	i	Extra kit [Opt]
F	23801 23912	156,5×72,9×18,5 155,3×72,9×18,5	ATE	2x 2x	[-]	–	

FORD	
Focus II Coupe ST	10/05 →
MAZDA	
3 (BK)	03 →
3 Tre volumi (BK)	03 →
VOLVO	
C 70 II	03/06 →
V 40 II	03/12 →
V 50	01/05 →

PF0609

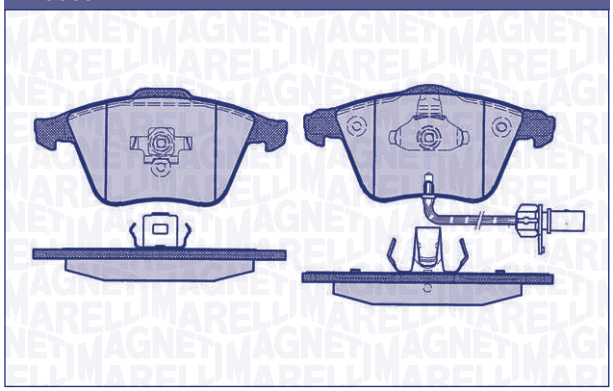

F/R	WVA	W×H×Th (mm)	SiS	Nr. Pz	W.i.	i	Extra kit [Opt]
F	23763 23801	156,5×72,9×20 155,3×72,9×20	ATE	2x 2x	2x	w.i. L=250mm	

AUDI	
A 4 II (8E)	01/05 →
A 4 II RS4 Quattro (8E)	05 →
A 4 II S4 Quattro (8E)	03 →
A 4 Cabrio (8H)	07/02 →
A 6 III Allroad (4FH)	05/06 →

PF0610

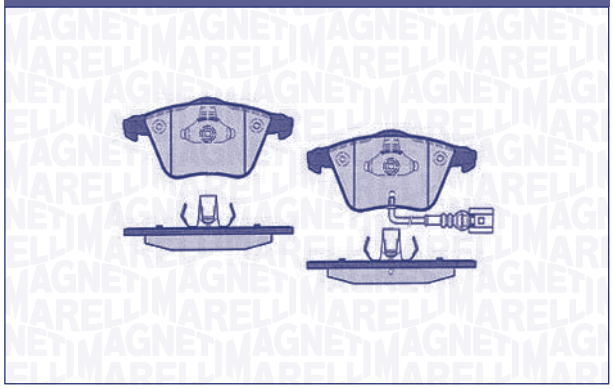

F/R	WVA	W×H×Th (mm)	SiS	Nr. Pz	W.i.	i	Extra kit [Opt]
F	23801 23912 23913	155,3×72,9×20 155,3×72,9×20	ATE	2x 1x 1x	1x	w.i. L=170mm	

AUDI	
TT II	08 →

PF0611



F/R	WVA	W×H×Th (mm)	SiS	Nr. Pz	W.i.	i	Extra kit [Opt]
F	23801 23912	156,5×72,9×18,5 155,3×72,9×18,5	ATE	2x 2x	2x	w.i. L=470mm	

VOLVO	
S40 II (MS) Polizia	01/05 →
V50 (MW) Polizia	01/05 →

PF0612



F/R	WVA	W×H×Th (mm)	SiS	Nr. Pz	W.i.	i	Extra kit [Opt]
F	23404 23405	155×72,8×20,2 156,3×77,5×20,2	ATE	2x 1x 1x	[o]	–	

OPEL	
Signum	06/03 →
Vectra C	03 →
Vectra GTS C	03 →
SAAB	
9-3 II (YS3F)	05 →
9-3 II Sport Sedan AERO (YS3F)	05 →
9-3 II Sport Sedan AERO Cabriolet (YS3F)	03 →
9-3X	02/09 →
VAUXHALL	
Signum	06/03 →
Vectra C	03 →
Vectra GTS C	03 →

PF0613

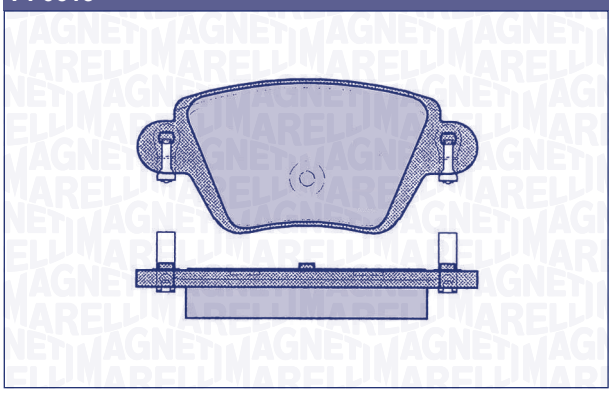

F/R	WVA	W×H×Th (mm)	SiS	Nr. Pz	W.i.	i	Extra kit [Opt]
R	40118	115,8×52×16,9	BSC	4x	[-]	–	OK012

RENAULT	
Kangoo II (FC)	01/02 →

PF0615

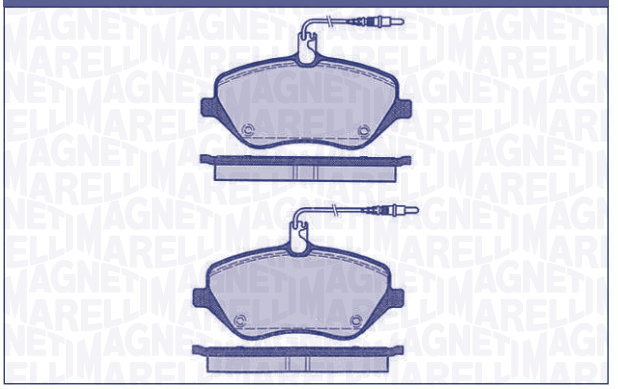

F/R	WVA	W×H×Th (mm)	SiS	Nr. Pz	W.i.	i	Extra kit [Opt]
F	24133 24174	162,5×79,2×18,3	LG	2x 2x	4x	w.i. L=2×320/ 2×360mm	OK030/ OK089

CITROËN	
C6	06/06 →
PEUGEOT	
407	04 →
407 Coupé (6C)	05 →
607 (Z9)	04 →

PF0616

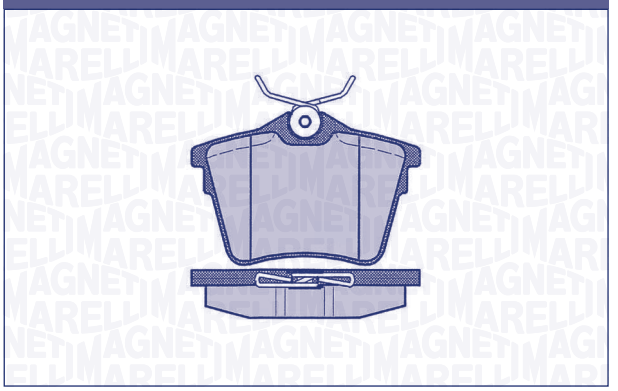

F/R	WVA	W×H×Th (mm)	SiS	Nr. Pz	W.i.	i	Extra kit [Opt]
R	24135	86,3×57×18	LG	4x	[-]	–	OK039

CITROËN	
C6	06 →
PEUGEOT	
407	04 →
407 Coupé (6C)	05 →

PF0617

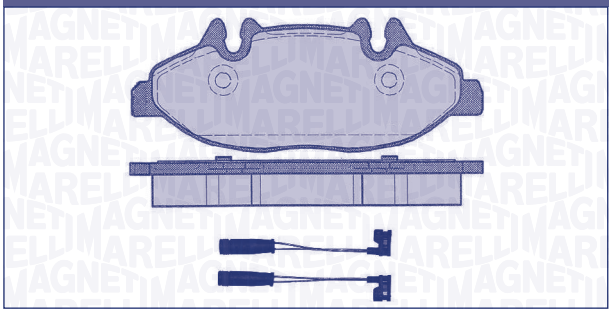

F/R	WVA	W×H×Th (mm)	SiS	Nr. Pz	W.i.	i	Extra kit [Opt]
F	24007	164,9×60×20,6	BR	4x	2x	–	OK033/ OK038/ OK042

MERCEDES	
Viano (W639)	07/03 →
Vito II (W639)	03 →

PF0618

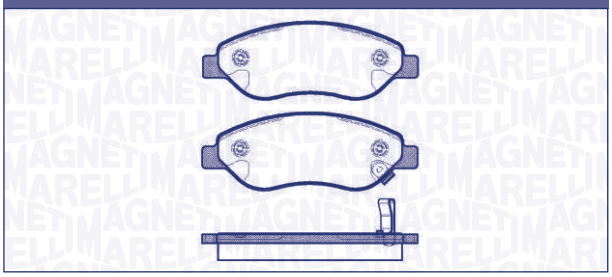

F/R	WVA	W×H×Th (mm)	SiS	Nr. Pz	W.i.	i	Extra kit [Opt]
F	24550 24551	151×54,8×19	BSC	3x 1x	1x	–	OK012/ OK038

OPEL	
Corsa D	06 →

PF0619

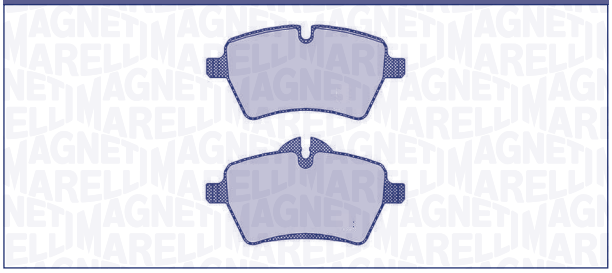

F/R	WVA	W×H×Th (mm)	SiS	Nr. Pz	W.i.	i	Extra kit [Opt]
F	23984 23985	131,5×64×18 131,5×71,3×18	LG	2x 2x	[0]	–	OK030

MINI (BMW)	
Cooper John Cooper Works (JCW)	06 →
Cooper S John Cooper Works (JCW)	06 →
Paceman (R61)	12 →

PF0620

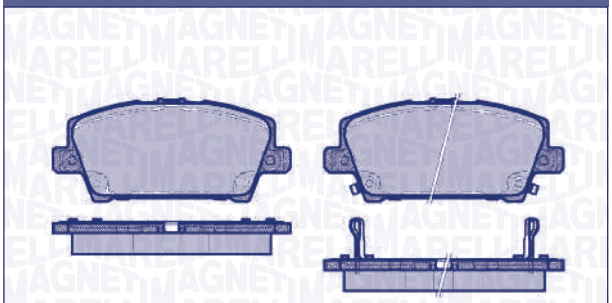

F/R	WVA	W×H×Th (mm)	SiS	Nr. Pz	W.i.	i	Extra kit [Opt]
F	24087 24405 24406	131,7×55,8×17,5	LG	2x 1x 1x	2x	–	

HONDA	
Civic VIII	01/06 →

PF0621

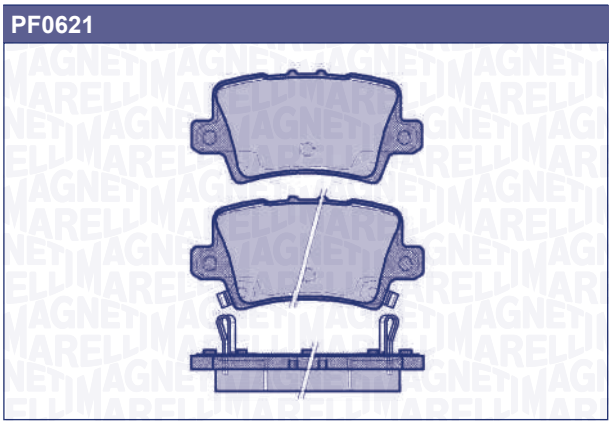

F/R	WVA	W×H×Th (mm)	SiS	Nr. Pz	W.i.	i	Extra kit [Opt]
R	24086 24518 24519	95,7×46,3×15,7	LG	2x 1x 1x	2x	–	OK088

HONDA	
Civic VIII	01/06 →

PF0622

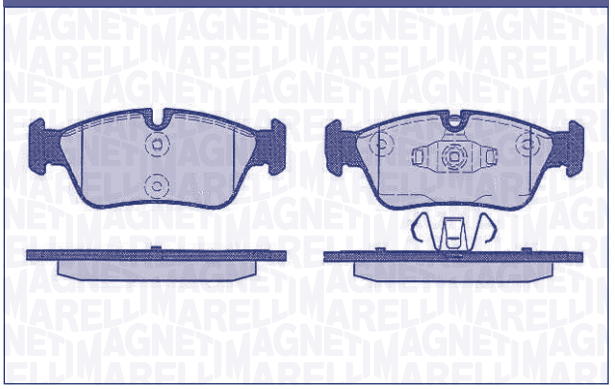

F/R	WVA	W×H×Th (mm)	SiS	Nr. Pz	W.i.	i	Extra kit [Opt]
F	23935 23977 23999	149,5×57,6×17,8 150,2×57,6×17,8	ATE	2x 2x	[o]	–	

BMW	
1 (E87)	04 →
3 (E90)	01/05 →

PF0623

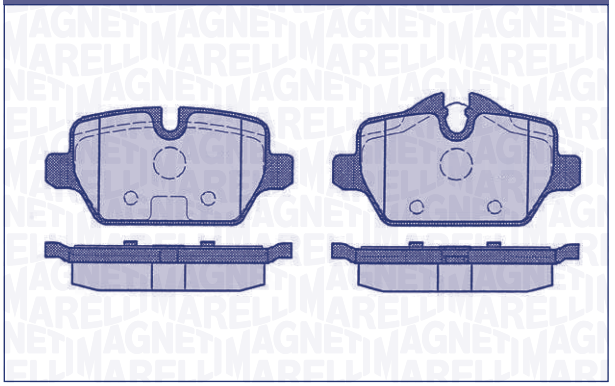

F/R	WVA	W×H×Th (mm)	SiS	Nr. Pz	W.i.	i	Extra kit [Opt]
R	25478 25479	95,4×45×16,8 95,4×52,9×16,8	LG	2x 2x	[-]	–	OK039/ OK064

MINI (BMW)	
Countryman (R60)	06/10 →
Paceman (R61)	12 →

PF0624

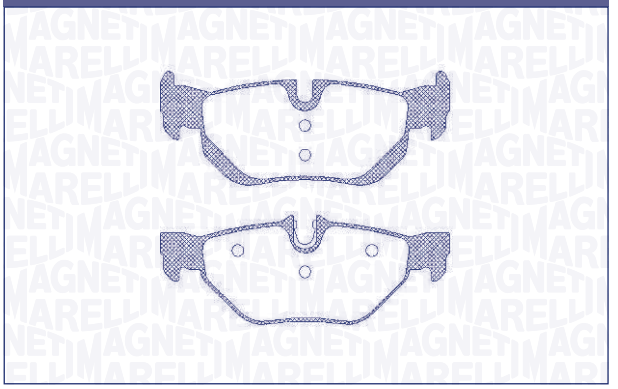

F/R	WVA	W×H×Th (mm)	SiS	Nr. Pz	W.i.	i	Extra kit [Opt]
R	23927 24226	123,1×48,3×17,3 123,1×47,7×17,3	ATE	2x 2x	[-]	–	

BMW	
1 (E87)	04 →
1 Coupe (E82)	10/07 →
1 Cabriolet (E88)	03/08 →
3 (E91)	01/05 →
3 (E90)	01/05 →
3 Coupe (E92)	06 →
3 Cabrio (E93)	03/07 →
X1	10/09 →

PF0625

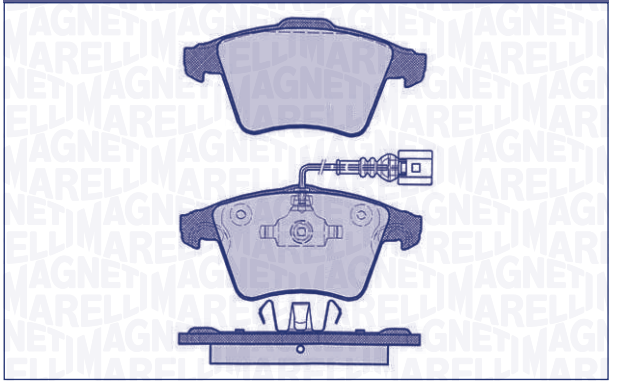

F/R	WVA	W×H×Th (mm)	SiS	Nr. Pz	W.i.	i	Extra kit [Opt]
F	23749 23747 23746	155,2×73,5×17,9 156,4×74,9×20	ATE	2x 2x	2x	w.i. L=300mm	

VOLKSWAGEN	
Touareg (7L_)	11/04 →

PF0626

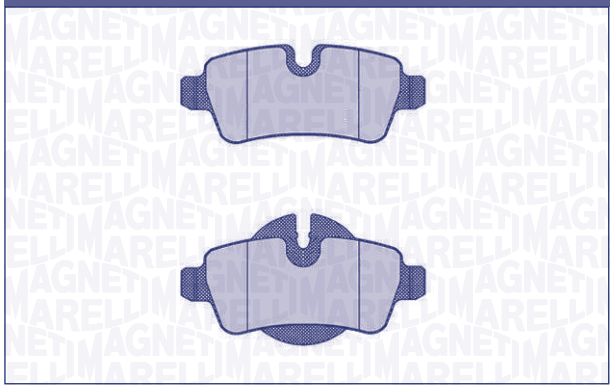

F/R	WVA	W×H×Th (mm)	SiS	Nr. Pz	W.i.	i	Extra kit [Opt]
R	24289 24290	95,5×39,2×17,2 95,5×48,5×17,2	LG	2x 2x	[-]	–	OK039/ OK064/ OK057

MINI (BMW)	
Clubman	10/07 →
Clubman Sport	10 →
ClubVan (R55)	12/12 →
Cooper (R58)	09/11 →
Cooper J.Cooper Works	10 →
Cooper One	10/06 →
Cooper R56	07 →
One Cabriolet Sport	10 →
One Cabriolet Cooper Sport	10 →
Roadster (R59)	02/12 →

PF0627

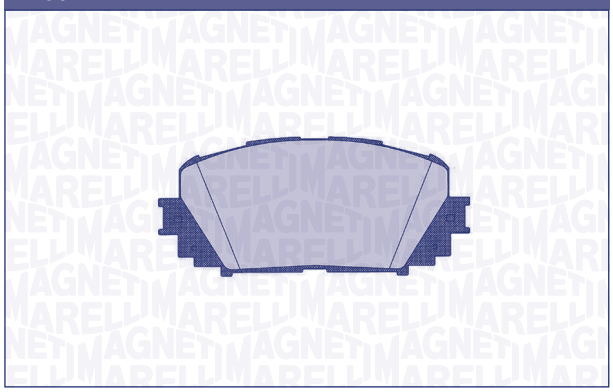

F/R	WVA	W×H×Th (mm)	SiS	Nr. Pz	W.i.	i	Extra kit [Opt]
F	24708	122,8×54,3×17,5	AK	4x	[-]	–	

TOYOTA	
Yaris II [Made in Japan]	06 →
Prius III (ZVW)	01/09 →

PF0628

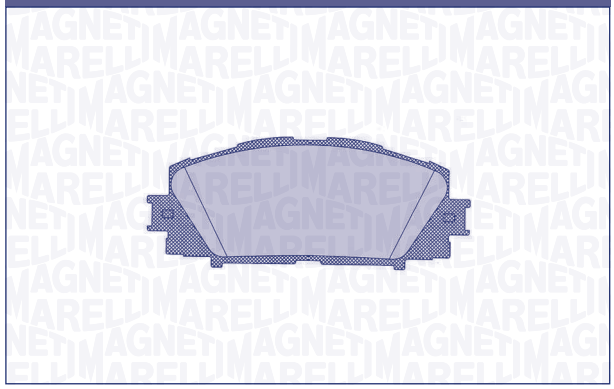

F/R	WVA	W×H×Th (mm)	SiS	Nr. Pz	W.i.	i	Extra kit [Opt]
F	24451	122,8×49,7×17	AK	4x	[-]	4 antirumore in confezione / 4 antinoise in the box	

TOYOTA	
Yaris II [Made in Japan]	06 →

PF0629

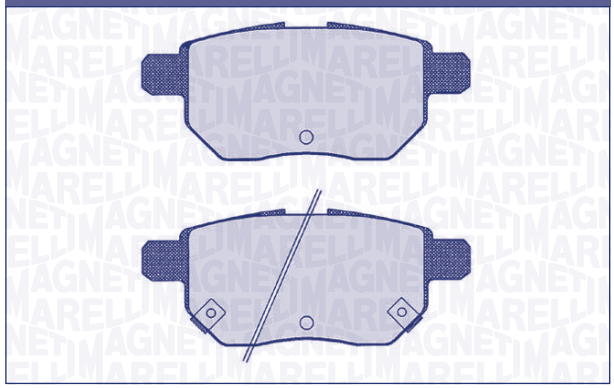

F/R	WVA	W×H×Th (mm)	SiS	Nr. Pz	W.i.	i	Extra kit [Opt]
R	24610 24611 24612	98,6×42,5×14,8	AK	2x 1x 1x	2x	–	

SUBARU	
Trezia	03/11 →
TOYOTA	
Auris	03/07 →
iq	09 →
Urban Cruiser	09 →
Verso S	11/10 →
Yaris II (P9)	06 →
Yaris III (P13)	09/11 →

PF0630

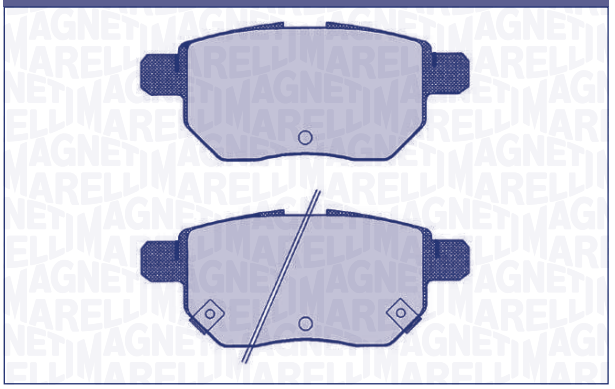

F/R	WVA	W×H×Th (mm)	SiS	Nr. Pz	W.i.	i	Extra kit [Opt]
R	25016 25017 25018	98,6×42,5×14,3	AK	2x 1x 1x	2x	–	

TOYOTA	
Prius III (ZVW3_)	01/09 →
Prius MPV III (ZVW4_)	05/11 →

PF0631

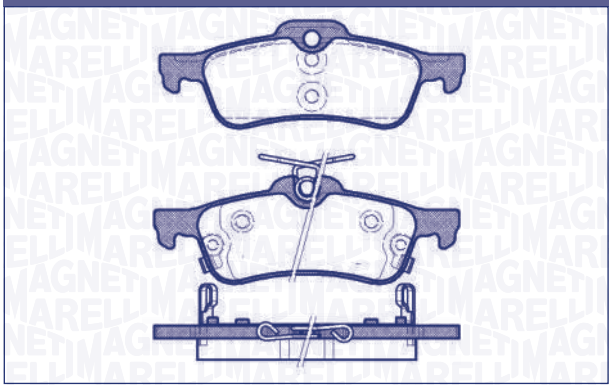

F/R	WVA	W×H×Th (mm)	SiS	Nr. Pz	W.i.	i	Extra kit [Opt]
R	24574 24575 24576	123,1×43,7×14,5	ATE	2x 1x 1x	2x	–	

TOYOTA	
Yaris II (P9)	06 →
Yaris III (P13)	09/11 →

PF0632

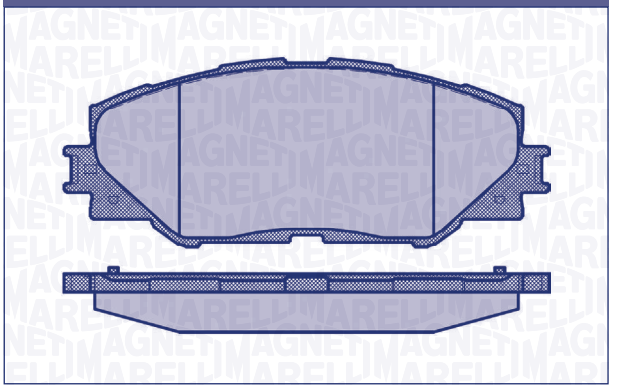

F/R	WVA	W×H×Th (mm)	SiS	Nr. Pz	W.i.	i	Extra kit [Opt]
F	24337	146,6×57×17,5	ST	4x	[-]	–	

TOYOTA	
Rav4 III	06 →
Rav4 IV	12/12 →

PF0633

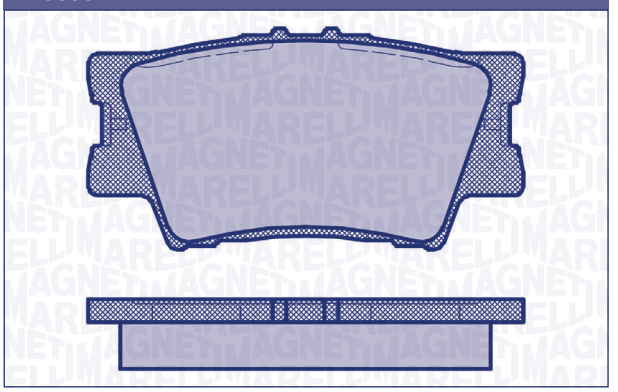

F/R	WVA	W×H×Th (mm)	SiS	Nr. Pz	W.i.	i	Extra kit [Opt]
R	24338	96,8×49,2×15,4	AK	4x	[-]	–	

LEXUS	
ES (AVV6_, GSV6_, ASV6_)	06/12
TOYOTA	
Camry V (MCV;ACV;XV)	01 →
Rav4 III	06 →
Rav4 IV	12/12 →

PF0634

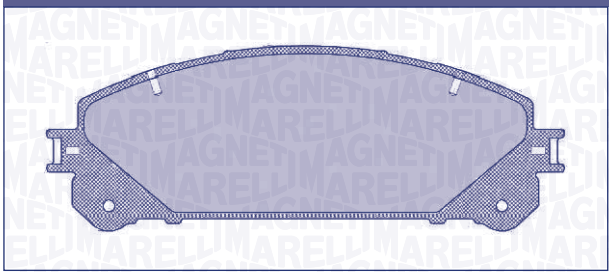

F/R	WVA	W×H×Th (mm)	SiS	Nr. Pz	W.i.	i	Extra kit [Opt]
F	24452	167×59,4×17,5	ST	4x	[-]	–	

LEXUS	
RX (GY_)	12/08 →
TOYOTA	
Rav4 IV /Europa	12/12 →

PF0635

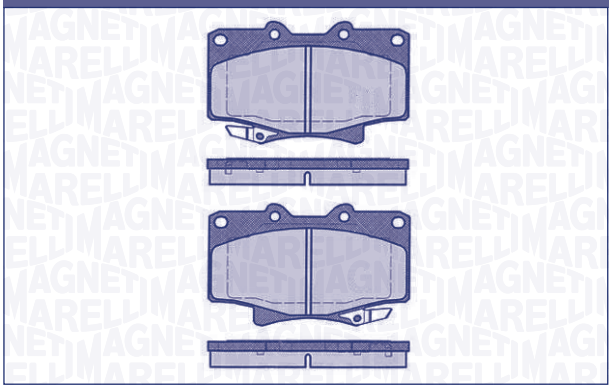

F/R	WVA	W×H×Th (mm)	SiS	Nr. Pz	W.i.	i	Extra kit [Opt]
F	21775 21776	119,2×72×15,0	ST	2x 2x	4x	–	

TOYOTA	
Hilux Pick-up	03/95 →
Land Cruiser 90 (J9)	04/96 →

PF0636

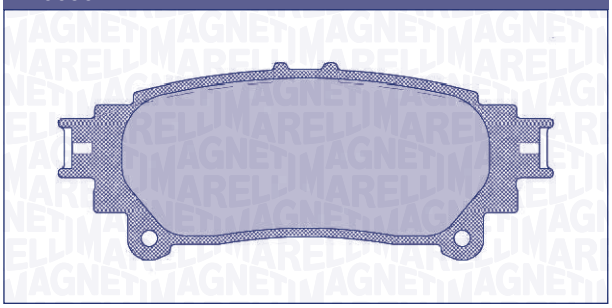

F/R	WVA	W×H×Th (mm)	SiS	Nr. Pz	W.i.	i	Extra kit [Opt]
R	24918	115,1×45,6×15	AK	-	[-]	–	

LEXUS	
RX (GY_)	12/08

PF0637

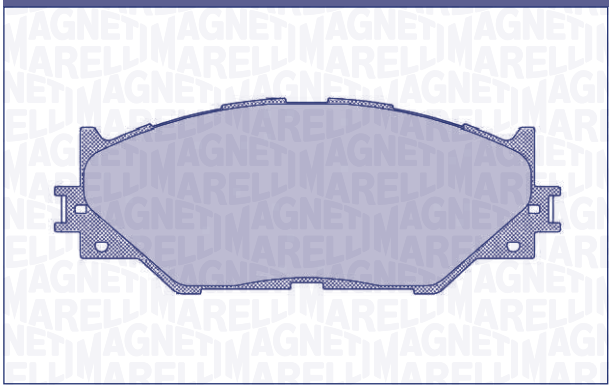

F/R	WVA	W×H×Th (mm)	SiS	Nr. Pz	W.i.	i	Extra kit [Opt]
F	23983	154,6×59,5×17,8	ADV	4x	[-]	–	

LEXUS	
GS (GRS;UZS;GWS)	→ 11/11
IS II (GSE_;ALE_;USE_)	05 →

PF0638



F/R	WVA	W×H×Th (mm)	SiS	Nr. Pz	W.i.	i	Extra kit [Opt]
R	24323 24324 24325	88,1×58×15,5	AK	2x 1x 1x	2x	–	

LEXUS	
IS II (GSE_;ALE_;USE_)	05 →

PF0639

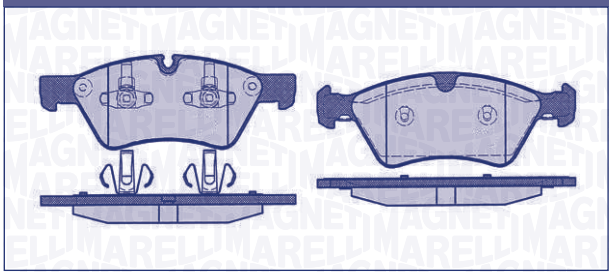

F/R	WVA	W×H×Th (mm)	SiS	Nr. Pz	W.i.	i	Extra kit [Opt]
F	23922 23925	194,4×70×20,1 193×70×20,1	ATE	2x 2x	[o]	–	

MERCEDES	
GL	06 →
ML (164)	07/05 →
R (W251)	01/06 →

PF0640

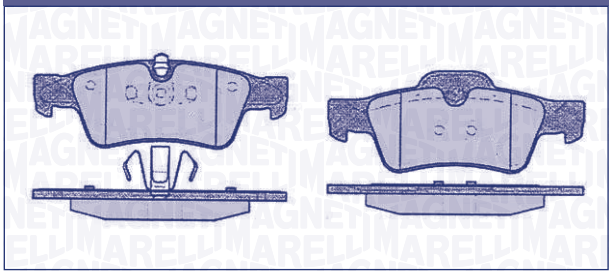

F/R	WVA	W×H×Th (mm)	SiS	Nr. Pz	W.i.	i	Extra kit [Opt]
R	23923 23924	140,5×51,7×17,6 141,5×59,6×17,6	ATE	2x 2x	[-]	–	

MERCEDES	
GL	06 →
ML (164)	07/05 →
R (W251)	01/06 →

PF0641

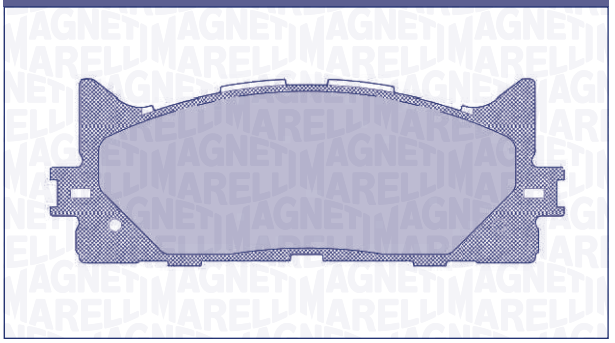

F/R	WVA	W×H×Th (mm)	SiS	Nr. Pz	W.i.	i	Extra kit [Opt]
F	-	157,7×56,9×17,6	AK	4x	[-]	–	

LEXUS	
ES (AVV6_, GSV6_, ASV6_)	06/12 →

PF0641

TOYOTA	
Aurion (GSV;ACV)	06 →
Camry V (MCV;ACV;XV)	01 →

PF0642

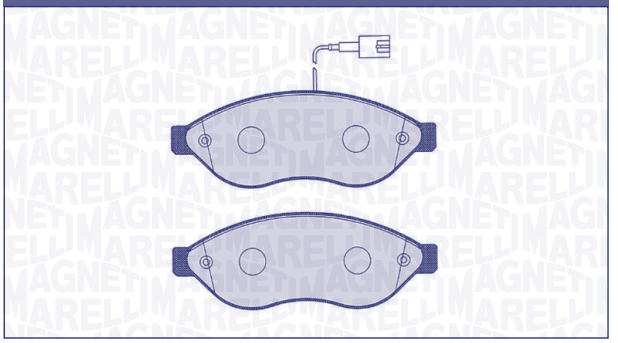

F/R	WVA	W×H×Th (mm)	SiS	Nr. Pz	W.i.	i	Extra kit [Opt]
F	24468 24469	169,3×61,5×19,2	BR	2x 2x	2x	w.i. L=160mm	OK052/ OK053/ OK060

CITROËN	
Jumper	06/11 →
FIAT	
Ducato (250)	06/11 →
PEUGEOT	
Boxer	06/11 →

PF0643

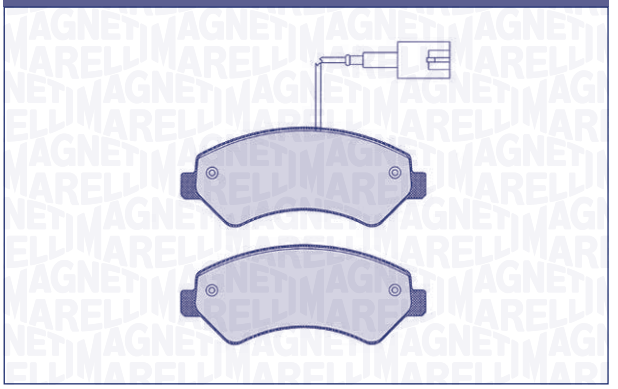

F/R	WVA	W×H×Th (mm)	SiS	Nr. Pz	W.i.	i	Extra kit [Opt]
F	24466 24467	169,3×69,2×19	BR	2x 2x	2x	w.i. L=160mm	OK060/ OK051/ OK066

CITROËN	
Jumper	07/11 →
FIAT	
Ducato (250)	07/11 →
PEUGEOT	
Boxer	07/11 →

PF0644

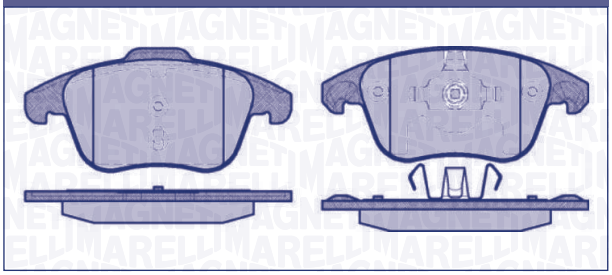

F/R	WVA	W×H×Th (mm)	SiS	Nr. Pz	W.i.	i	Extra kit [Opt]
F	24557 24558	155,3×71,9×18,2	ATE	2x 2x	[-]	–	

CITROËN	
C4 Picasso-Gran Picasso	06 →
DS4	11 →
DS5	11 →

PF0645

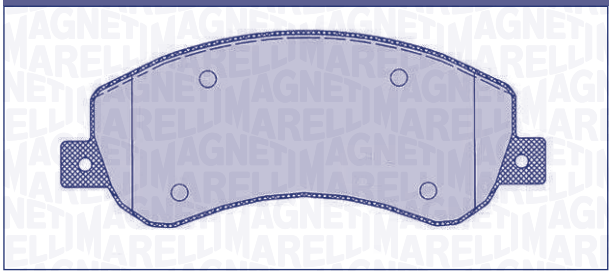

F/R	WVA	W×H×Th (mm)	SiS	Nr. Pz	W.i.	i	Extra kit [Opt]
F	24484	164,9×66,8×18,7	BSC	4x	[-]	–	OK072/ OK038

VOLKSWAGEN	
Amarok	10 →

PF0646

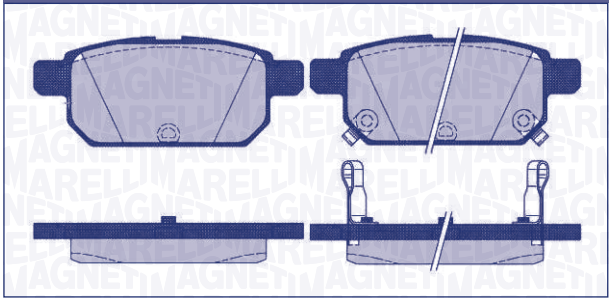

F/R	WVA	W×H×Th (mm)	SiS	Nr. Pz	W.i.	i	Extra kit [Opt]
R	25258 25259 25260	98,5×40×14,3	AK	2x 1x 1x	2x	–	

SUZUKI	
S-Cross	13 →
Swift IV	03 →

PF0647

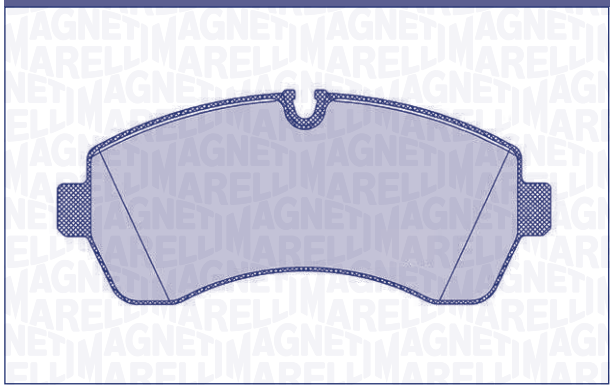

F/R	WVA	W×H×Th (mm)	SiS	Nr. Pz	W.i.	i	Extra kit [Opt]
F	29200	169,3×73,5×20,6	BR	4x	[o]	–	OK060

MERCEDES	
Sprinter 4,6-t (906)	06/06 →
Sprinter 5-t (906)	06/06 →
VOLKSWAGEN	
Crafter 30-35 (2E)	04/06 →
Crafter 30-50 (2E)	04/06 →

PF0648

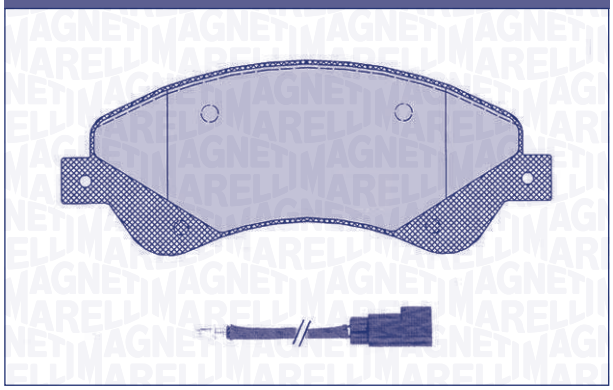

F/R	WVA	W×H×Th (mm)	SiS	Nr. Pz	W.i.	i	Extra kit [Opt]
F	24485	164,9×65,4×18,9	BSC	4x	2x	w.i. L=250mm	OK072/ OK038

FORD	
Transit	07/05 →

PF0649

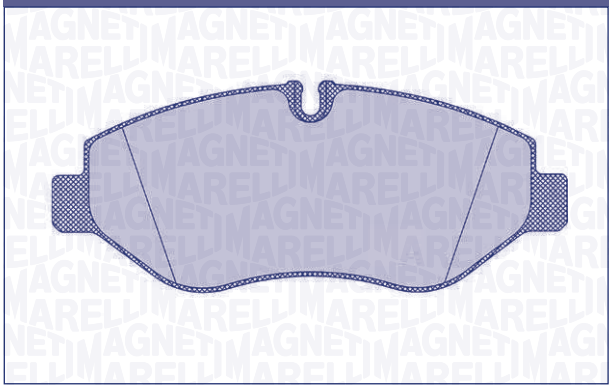

F/R	WVA	W×H×Th (mm)	SiS	Nr. Pz	W.i.	i	Extra kit [Opt]
F	29229	163,2×67,1×20	BR	4x	[o]	–	OK060/ OK090/ OK050

IVECO	
Daily III/IV/V	06 →

PF0650

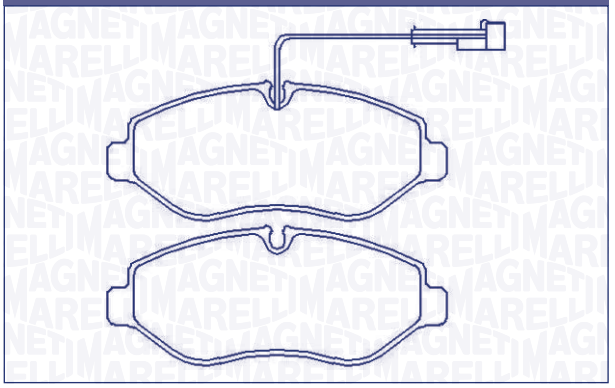

F/R	WVA	W×H×Th (mm)	SiS	Nr. Pz	W.i.	i	Extra kit [Opt]
F	29229 29230	163,2×67,1×20	BR	2x 2x	2x	w.i. L=145mm	OK060/ OK090

NISSAN	
Cabstar	10/06 →
RENAULT	
Maxity	03/07 →

PF0653

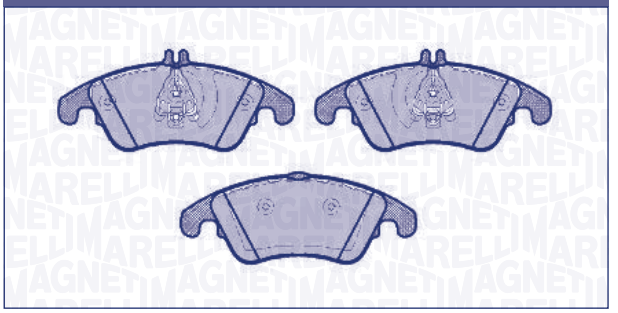

F/R	WVA	W×H×Th (mm)	SiS	Nr. Pz	W.i.	i	Extra kit [Opt]
F	24208 24310 24311 24456	188,1×73,7×19 188,1×80,8×19	ATE	2x 2x	[-]	–	

MERCEDES	
C (W204)	01/07 →
C (S204) SW	08/07 →
CLS (C218)	01/11 →
E (W212)	01/09 →
E T.Model (S212)	11/09 →
E Cabriolet (A207)	01/10 →
E Coupé (C207)	01/09 →
SLK (R176)	02/11 →

PF0654

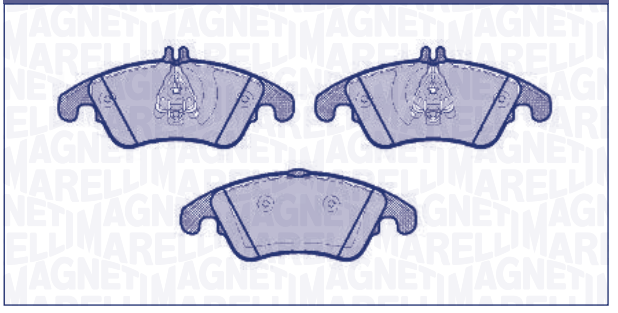

F/R	WVA	W×H×Th (mm)	SiS	Nr. Pz	W.i.	i	Extra kit [Opt]
F	24208 24310 24311 24456	188,1×73,7×19 188,1×80,8×19	ATE	2x 2x	1x	–	

MERCEDES	
C (W204)	01/07 →
C (S204) SW	08/07 →
CLS (C218)	01/11 →
E (W212)	01/09 →
E T.Model (S212)	11/09 →
E Cabriolet (A207)	01/10 →
E Coupé (C207)	01/09 →
SLK (R176)	02/11 →

PF0655

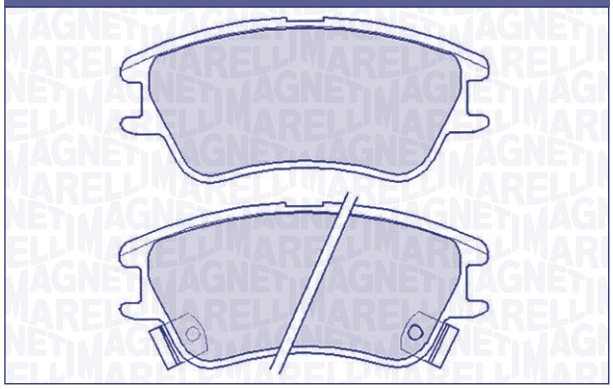

F/R	WVA	W×H×Th (mm)	SiS	Nr. Pz	W.i.	i	Extra kit [Opt]
F	24277 24397 24398	104,7×47×16	MN	2x 1x 1x	2x	–	

HYUNDAI	
Atos Prime (MX) (D.234)	08/99 →

PF0656

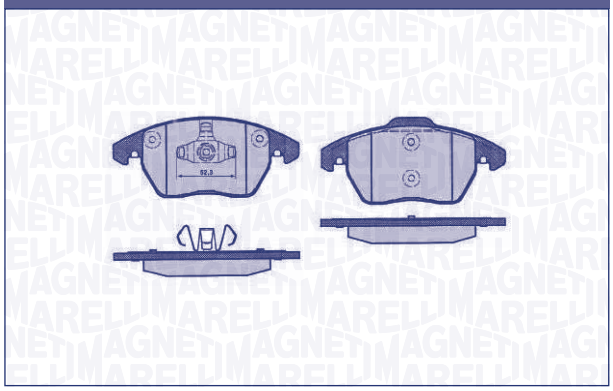

F/R	WVA	W×H×Th (mm)	SiS	Nr. Pz	W.i.	i	Extra kit [Opt]
F	24696	155,2×66×18,8 155,2×71,3×18,8	ATE	2x 2x	[-]	–	

PEUGEOT	
307 CC II	03 →
308	07 →
308 SW	09/07 →

PF0657

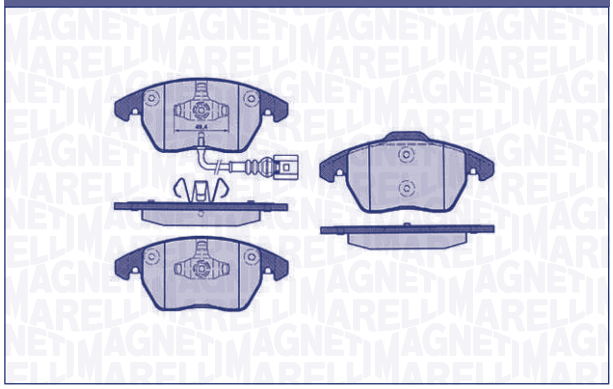

F/R	WVA	W×H×Th (mm)	SiS	Nr. Pz	W.i.	i	Extra kit [Opt]
F	24696	155,2×66×20,1 155,2×71,3×20,1	ATE	2x 1x 1x	1x	w.i. L=165mm	

AUDI	
TT (8J) II	06 →
TT (8J) II Roadster	02/07 →
VOLKSWAGEN	
Golf VI Cabriolet (517)	11 →
Passat BN (362)	10 →
Passat SW (365)	10 →
Passat Passat AllTrack (365)	01/12 →

PF0658

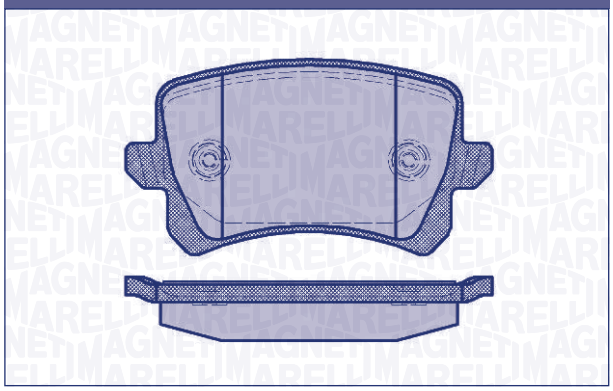

F/R	WVA	W×H×Th (mm)	SiS	Nr. Pz	W.i.	i	Extra kit [Opt]
R	24483	105,3×56,3×17	LG	4x	[-]	–	OK039

AUDI	
Q3	06/11 →
SEAT	
Alhambra (710)	06/10 →
VOLKSWAGEN	
Passat CC	06/08 →
Passat AllTrack (365)	01/12 →
Tiguan (5N)	11/07 →

PF0659

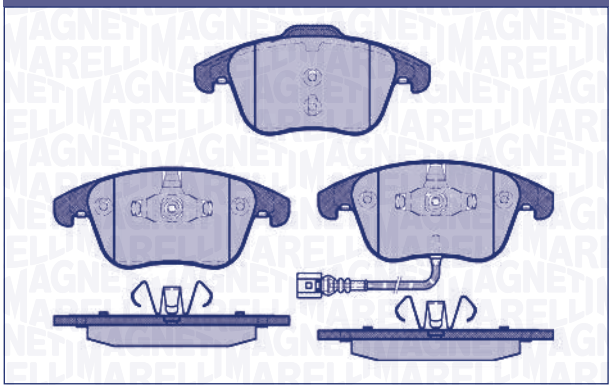

F/R	WVA	W×H×Th (mm)	SiS	Nr. Pz	W.i.	i	Extra kit [Opt]
F	24332 24333 24334	155,1×66,6×19,5 155,1×71,9×20,6	ATE	2x 1x 1x	1x	w.i. L=155mm	

AUDI	
Q3	06/11 →
SEAT	
Alhambra (710)	06/10 →
VOLKSWAGEN	
Sharan III (7N)	05/10 →
Tiguan (5N)	11/07 →

PF0660

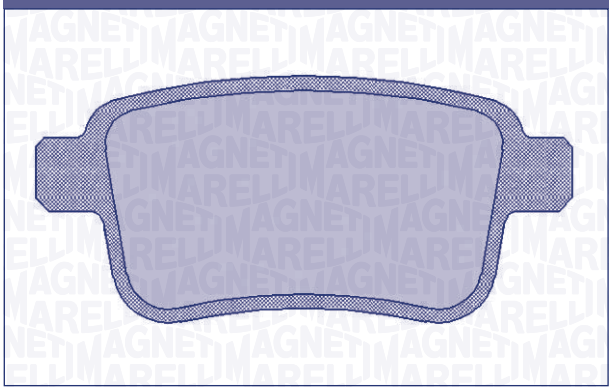

F/R	WVA	W×H×Th (mm)	SiS	Nr. Pz	W.i.	i	Extra kit [Opt]
R	24692	95,5×44,1×16	LG	4x	[-]	–	OK030/ OK081

MERCEDES	
Citan (415)	11/12 →
RENAULT	
Kangoo Be Bop	02/08 →
Kangoo III	02/08 →
Kangoo III Express	02/08 →

PF0661

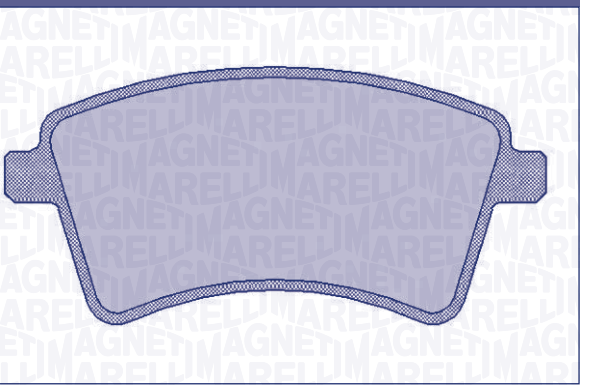

F/R	WVA	W×H×Th (mm)	SiS	Nr. Pz	W.i.	i	Extra kit [Opt]
F	24693	131,2×62,3×18,6	LG	4x	[-]	–	OK030/ OK044

MERCEDES	
Citan (415)	11/12 →
RENAULT	
Kangoo Be Bop	02/08 →
Kangoo III	02/08 →
Kangoo III Express	02/08 →

PF0662

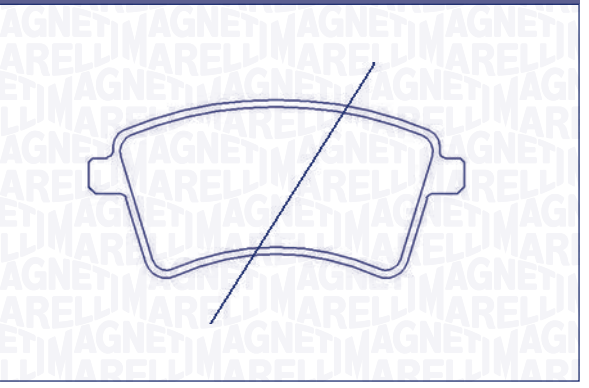

F/R	WVA	W×H×Th (mm)	SiS	Nr. Pz	W.i.	i	Extra kit [Opt]
F	24693	131,2×62,3×18,6	LG	3x 1x	1x	w.i. L=220mm	OK030/ OK044

RENAULT	
Kangoo III	01/08 →

PF0663

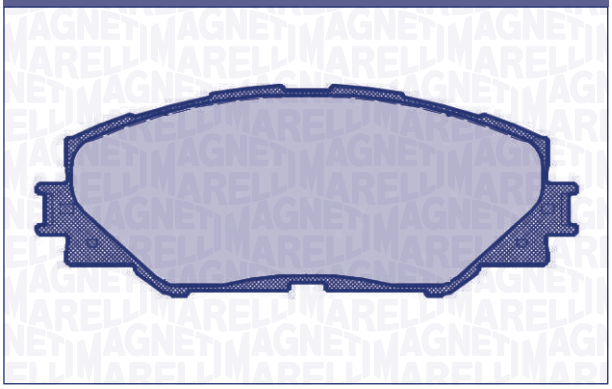

F/R	WVA	W×H×Th (mm)	SiS	Nr. Pz	W.i.	i	Extra kit [Opt]
F	24336	139,1×55,6×17,5	AK	4x	[-]	4 antirumore in confezione / 4 antinoise in the box	

SUBARU	
Trezia 1.3	03/11 →
Trezia 1.4 D	03/11 →
TOYOTA	
Auris (E15)	03/07 →
Rav4 III (AC_)	11/05 →
Urban Cruiser	09 →
Verso S	11/10 →

PF0664

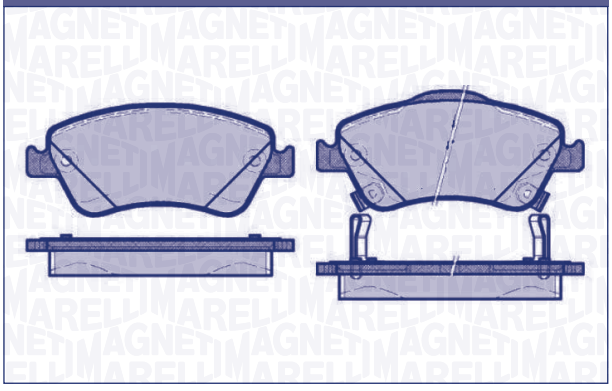

F/R	WVA	W×H×Th (mm)	SiS	Nr. Pz	W.i.	i	Extra kit [Opt]
F	24590 24591	136,8×57,9×19,2 136,8×61,5×19,2	AK	2x 1x 1x	2x	–	OK079

TOYOTA	
Auris (E15)	03/07 →
Auris (ZE15/RE_)	10/12 →

PF0665

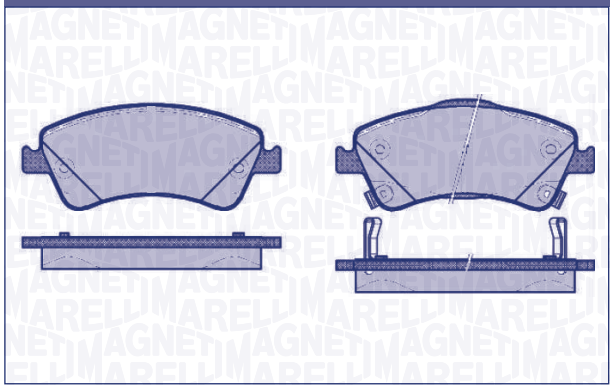

F/R	WVA	W×H×Th (mm)	SiS	Nr. Pz	W.i.	i	Extra kit [Opt]
F	24204 24690 24691 24669	150,9×62,5×19 150,9×65,4×19	AK	2x 1x 1x	2x	–	OK079

TOYOTA	
Avensis III (T27)	02/09 →
Auris (E15)	03/07 →
Auris Touring Sport	07/13 →
Verso	09 →

PF0666

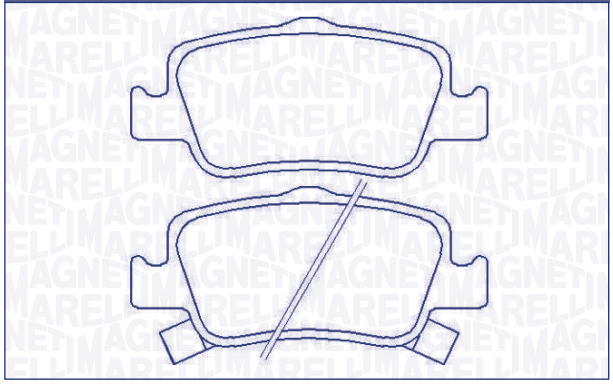

F/R	WVA	W×H×Th (mm)	SiS	Nr. Pz	W.i.	i	Extra kit [Opt]
R	24664 24665 24666	102,3×45,6×16,1	AK	2x 1x 1x	2x	–	OK040

TOYOTA	
Auris	03/07 →
Auris Touring Sport	07/13 →

PF0667

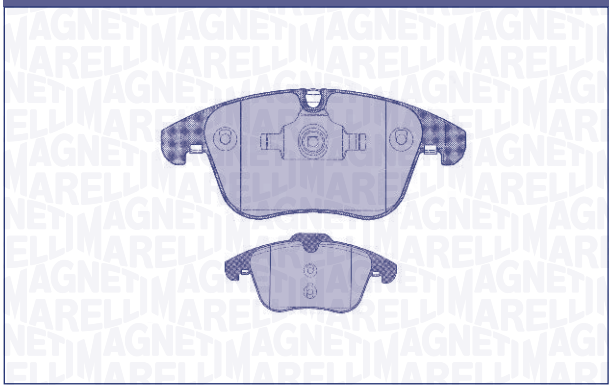

F/R	WVA	W×H×Th (mm)	SiS	Nr. Pz	W.i.	i	Extra kit [Opt]
F	24084 24332	155,2×66,6×18 155,2×72×18	ATE	2x 2x	[o]	–	

CITROËN	
C5 III	02/08 →

PF0668



F/R	WVA	W×H×Th (mm)	SiS	Nr. Pz	W.i.	i	Extra kit [Opt]
F	24084 24332	155,2×66,6×18 155,2×72×18	ATE	2x 2x	2x	w.i. L=310mm	

CITROËN	
C5 III	02/08 →

PF0669

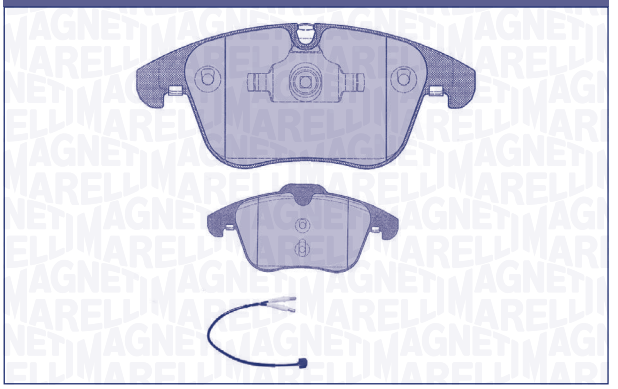

F/R	WVA	W×H×Th (mm)	SiS	Nr. Pz	W.i.	i	Extra kit [Opt]
F	24084 24332	155,2×66,6×18 155,2×72×18	ATE	2x 2x	1x	w.i. L=310mm	

PEUGEOT	
407	04 →
508	11/10 →

PF0670

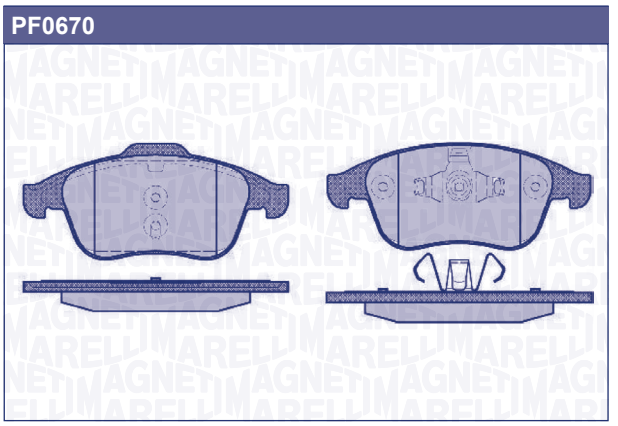

F/R	WVA	W×H×Th (mm)	SiS	Nr. Pz	W.i.	i	Extra kit [Opt]
F	24710 24709	155,2×63,0×18 156,4×68,6×18	ATE	2x 2x	[-]	–	

RENAULT	
Laguna IV	10/07 →
Latitude	08 →
Megane BN/SW III	11/08 →
Megane III Coupè	11/08 →
Scenic III	09 →

PF0671

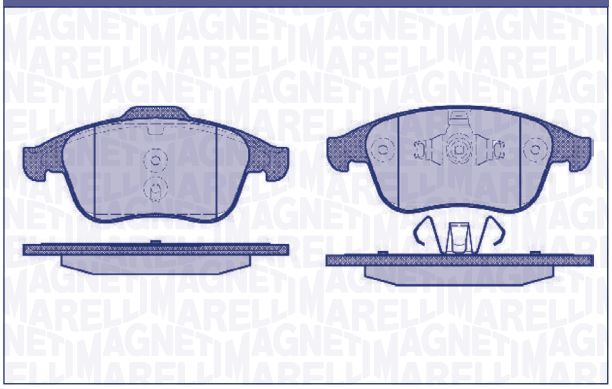

F/R	WVA	W×H×Th (mm)	SiS	Nr. Pz	W.i.	i	Extra kit [Opt]
F	24870 24709	155,2×63,0×18 156,4×68,6×18	ATE	2x 2x	[-]	–	

RENAULT	
Laguna IV	03/08 →
Laguna Coupé (DT0)	03/08 →

PF0672

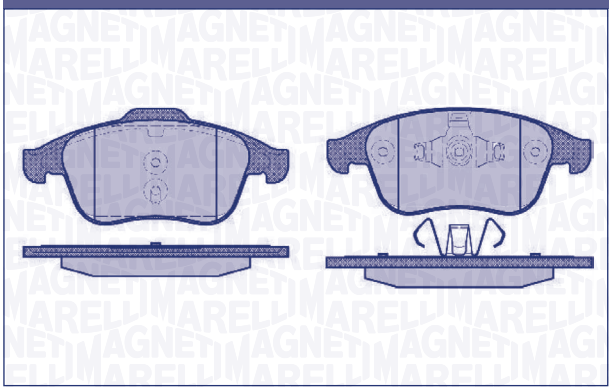

F/R	WVA	W×H×Th (mm)	SiS	Nr. Pz	W.i.	i	Extra kit [Opt]
F	24710 24826	155,2×63,0×18 155,2×68,6×18	ATE	2x 2x	[-]	–	

RENAULT	
Megane BN/SW III	11/08 →
Megane III Coupè (DZ0)	11/08 →
Megane CC III (EZ0)	10 →

PF0673

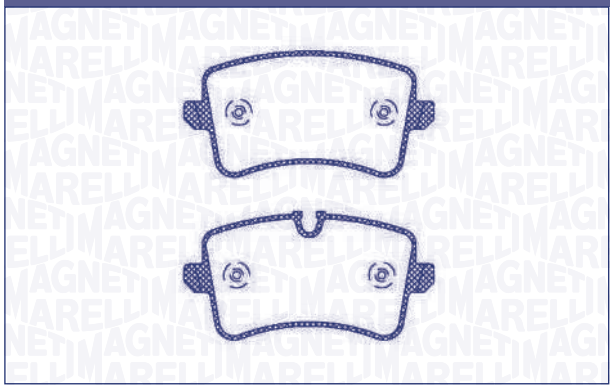

F/R	WVA	W×H×Th (mm)	SiS	Nr. Pz	W.i.	i	Extra kit [Opt]
R	24606 25214	116,4×58,5×17,5 116,4×59,8×17,5	LG	2x 2x	[-]	–	OK030

AUDI	
A 6 (4G_)	11 →
A 6 Allroad	12 →
A 7	10 →

PF0674

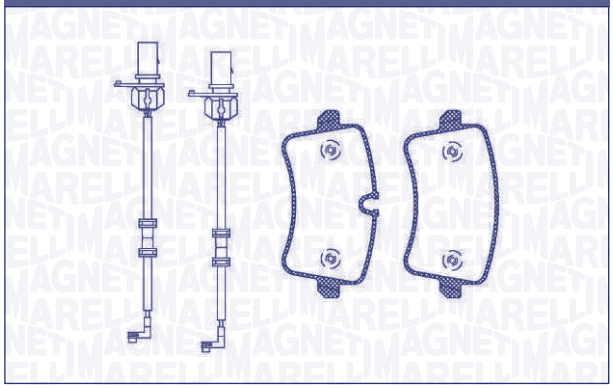

F/R	WVA	W×H×Th (mm)	SiS	Nr. Pz	W.i.	i	Extra kit [Opt]
R	24606 25214	116,4×58,5×17,5 116,4×59,8×17,5	LG	2x 2x	2x	w.i. L=250mm	OK030

AUDI	
A 8 (4H_) 1KY/1KZ	10 →

PF0675

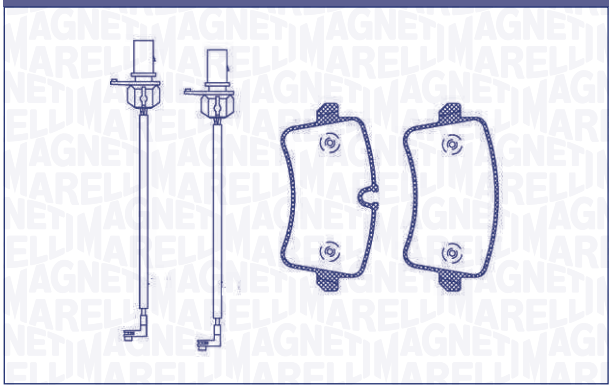

F/R	WVA	W×H×Th (mm)	SiS	Nr. Pz	W.i.	i	Extra kit [Opt]
R	24606 25214	116,4×58,5×17,5 116,4×59,8×17,5	LG	2x 2x	2x	w.i. L=295mm	OK030

AUDI	
A 8 (4H_) 1KW	10 →

PF0676

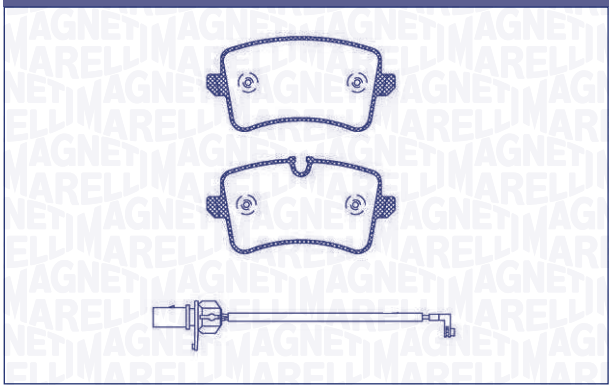

F/R	WVA	W×H×Th (mm)	SiS	Nr. Pz	W.i.	i	Extra kit [Opt]
R	24606 25214	116,4×58,5×17,5 116,4×59,8×17,5	LG	2x 2x	1x	w.i. L=215mm	OK030

AUDI	
A 6 (4G_)	11 →
A 6 Allroad	12 →
A 7	10 →

PF0677

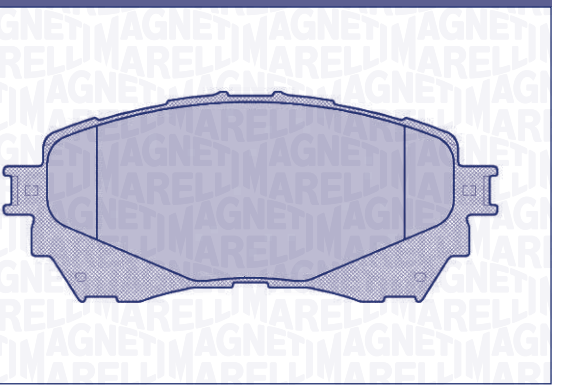

F/R	WVA	W×H×Th (mm)	SiS	Nr. Pz	W.i.	i	Extra kit [Opt]
F	25725	140,3×59,6×15,5		4x	4x	–	

MAZDA	
6 (GJ) SW III	12/12 →

PF0678

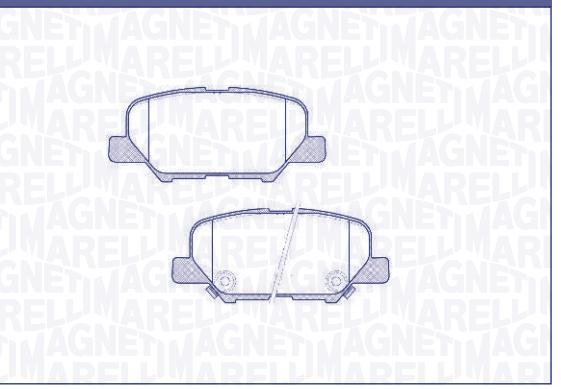

F/R	WVA	W×H×Th (mm)	SiS	Nr. Pz	W.i.	i	Extra kit [Opt]
R	25688 25689 25690	101,5×44,4×14,3	AK	2x 1x 1x	2x	–	

CITROËN	
C4 Aircross	04/12 →
MAZDA	
6 (GJ) SW III	12/12 →
MITSUBISHI	
ASX (GA_W)	10/12 →
Outlander II (CW,W)	11/06 →
Outlander III (GG,W)(GF,W)	08/12 →
PEUGEOT	
4008 nr. org 13115 →	05/12 →

PF0679

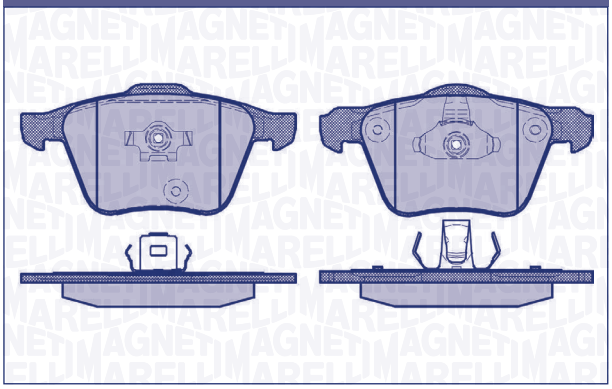

F/R	WVA	W×H×Th (mm)	SiS	Nr. Pz	W.i.	i	Extra kit [Opt]
F	24141 24142	155,1×75,1×19 156,6×74,2×20,5	ATE	2x 2x	[-]	–	

VOLVO	
XC90	10/02 →

PF0681

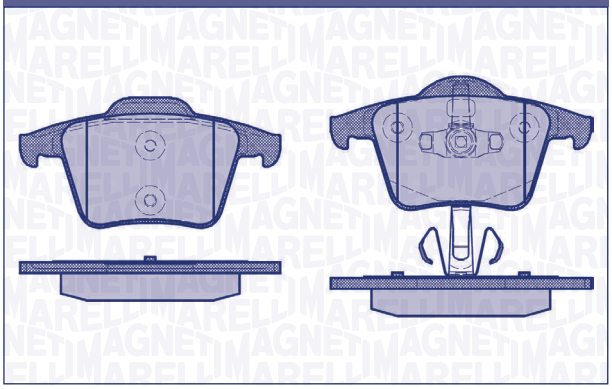

F/R	WVA	W×H×Th (mm)	SiS	Nr. Pz	W.i.	i	Extra kit [Opt]
R	24011 24012	123×61,8×18,6 123×63,6×18,6	ATE	2x 2x	[-]	–	

VOLVO	
XC90	10/02 →
XC90	10/02 →

PF0683

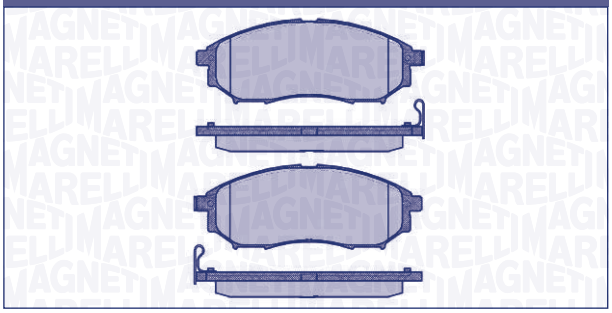

F/R	WVA	W×H×Th (mm)	SiS	Nr. Pz	W.i.	i	Extra kit [Opt]
F	23698 24497	157,1×58,3×18	LG	2x 2x	4x	4 antirumore in confezione / 4 antinoise in the box	

INFINITI	
EX 30d	04/10 →
EX 37	10/08 →
FX	04/10 →
FX 35-37-45	01/03 →
M35	05 →
NISSAN	
Murano (Z51)	07 →
M35	05 →
Q45	93 →
RENAULT	
Koleos	07 →

PF0684

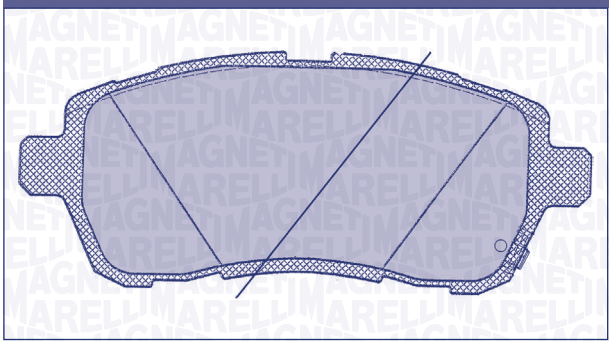

F/R	WVA	W×H×Th (mm)	SiS	Nr. Pz	W.i.	i	Extra kit [Opt]
F	24283 24284	125,7×51.4×16,5	LG	3x 1x	1x	4 antirumore in confezione / 4 antinoise in the box	OK033/ OK084

DAIHATSU	
Coo	10/06 →
Materia (M4)	10/06 →
MAZDA	
2 II	10/07 →

PF0686

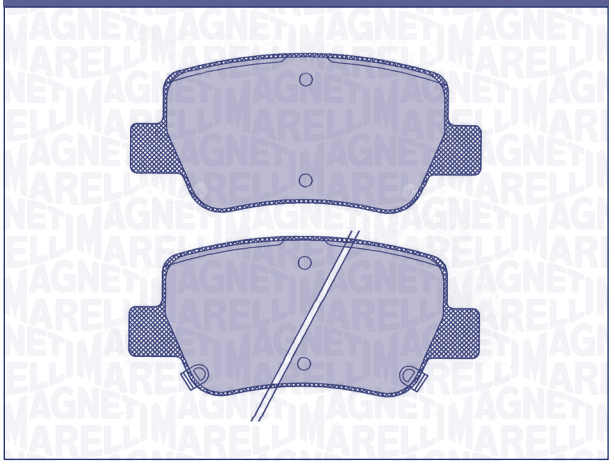

F/R	WVA	W×H×Th (mm)	SiS	Nr. Pz	W.i.	i	Extra kit [Opt]
R	24885 24886 24887	109×49,9×16,5 109×50×16,5	BSC	2x 1x 1x	2x	–	OK040

TOYOTA

Avensis III (T27)	02/09 →

PF0687

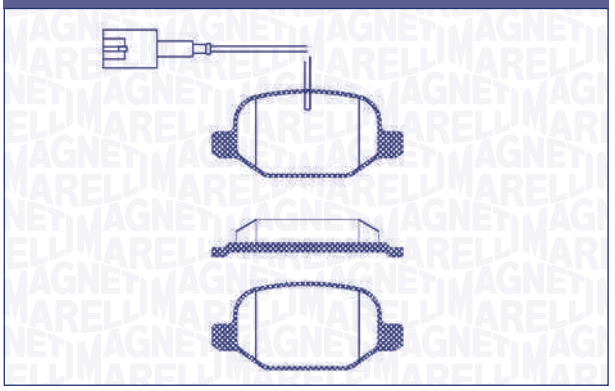

F/R	WVA	W×H×Th (mm)	SiS	Nr. Pz	W.i.	i	Extra kit [Opt]
R	25237	95,8×43,9×17,2	LG	2x 2x	2x	w.i. L=180mm	OK039

ALFA ROMEO

Mito (937)	05/10 →

PF0688

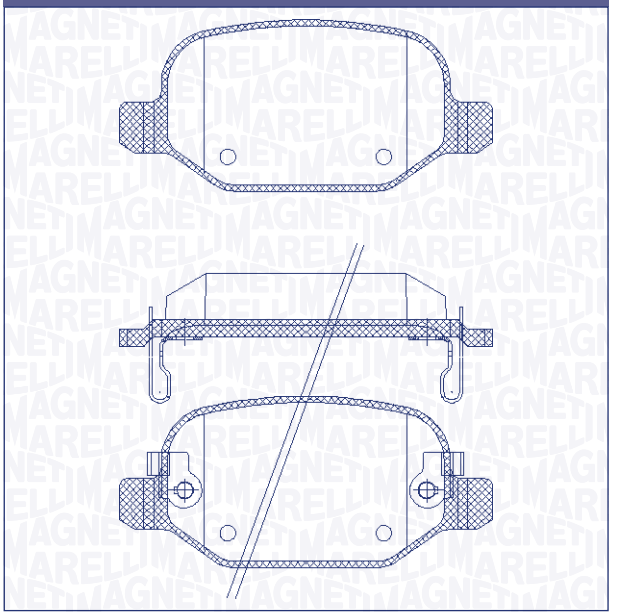

F/R	WVA	W×H×Th (mm)	SiS	Nr. Pz	W.i.	i	Extra kit [Opt]
R	25652 25653 25654	95,8×43,9×17	LG	2x 1x 1x	2x	–	OK039/ OK069

FIAT

500L	10/12 →

PF0689

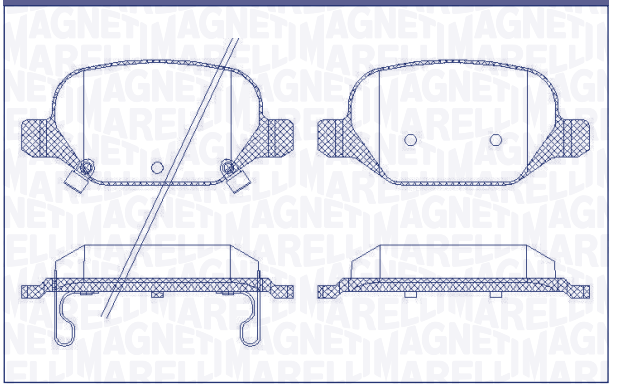

F/R	WVA	W×H×Th (mm)	SiS	Nr. Pz	W.i.	i	Extra kit [Opt]
R	25410 25411 25412	95,8×43,9×14,3	LG	2x 1x 1x	2x	–	OK039/ OK069

FIAT

Panda 4x4 III (312)	11/12 →

PF0690

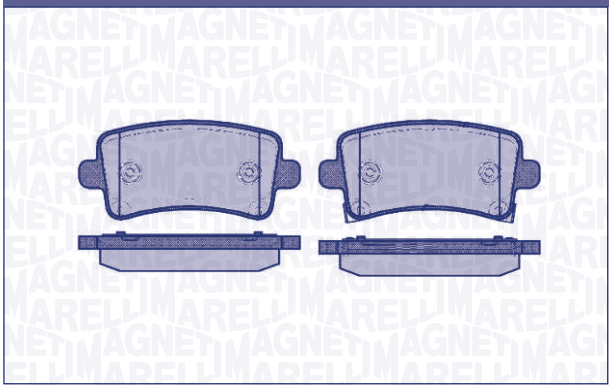

F/R	WVA	W×H×Th (mm)	SiS	Nr. Pz	W.i.	i	Extra kit [Opt]
R	24421 24422	106,5×47,1×17,2	LG	2x 2x	4x	–	OK071/ OK075/ OK096

OPEL	
Insignia BN-SW	08 →
Insignia Sports Tourer	08 →
SAAB	
9-5 II (YS3G)	05/10 →
VAUXHALL	
Insignia BN-SW	08 →
Insignia Sports Tourer (POCJ_61) 17"	08 →

PF0691

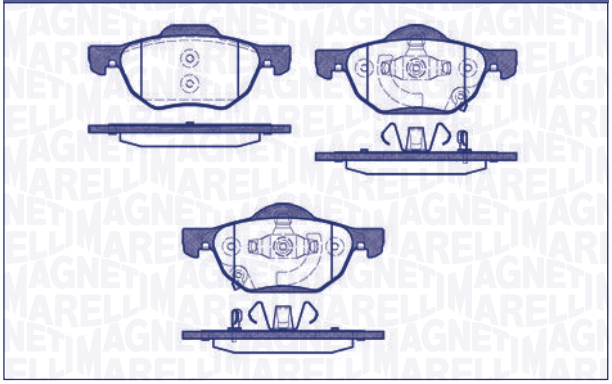

F/R	WVA	W×H×Th (mm)	SiS	Nr. Pz	W.i.	i	Extra kit [Opt]
F	23719 23720 23721 24213	155,1×64,6×17,2 155,1×68,3×17,2	ATE	2x 2x	2x	–	

HONDA	
Accord VII	03 →

PF0693

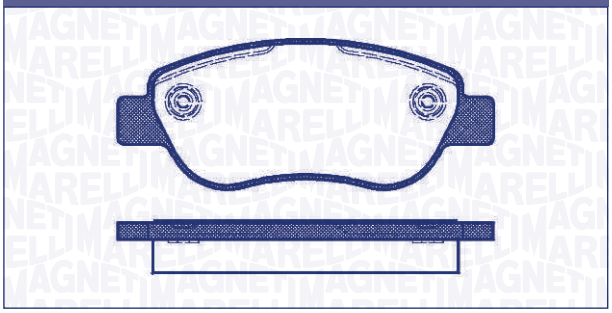

F/R	WVA	W×H×Th (mm)	SiS	Nr. Pz	W.i.	i	Extra kit [Opt]
F	24393	123,3×49,3×17,8	BSC	4x	[-]	–	OK033/ OK040

FIAT	
Palio Turchia 1.2	01/03 →
RENAULT	
Megane BN II	10/03 →
Megane SW II	10/03 →
Megane 3 Volumi	03 →

PF0694

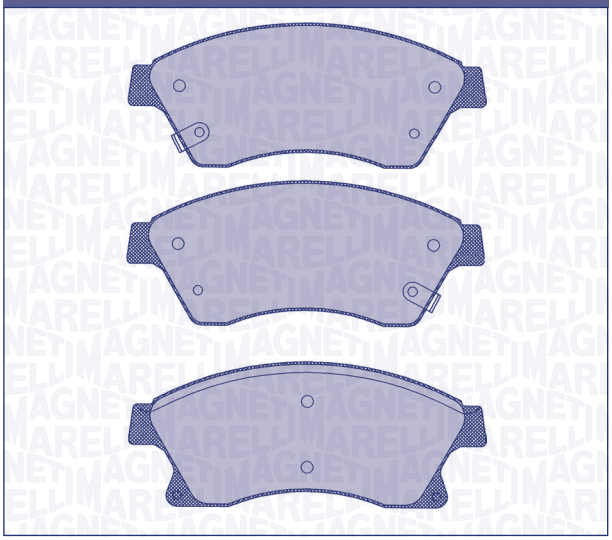

F/R	WVA	W×H×Th (mm)	SiS	Nr. Pz	W.i.	i	Extra kit [Opt]
F	25031 25032 25033	148×60,3×18,8	ATE	2x 1x 1x	2x	–	

CHEVROLET (DAEWOO)	
Cruze (J_)	09 →
Orlando	02/11 →
OPEL	
Astra J	09 →
Astra J GTC	11 →
Astra J 3 Volumi	12 →
VAUXHALL	
Astra J (MKVI)	09 →

PF0695

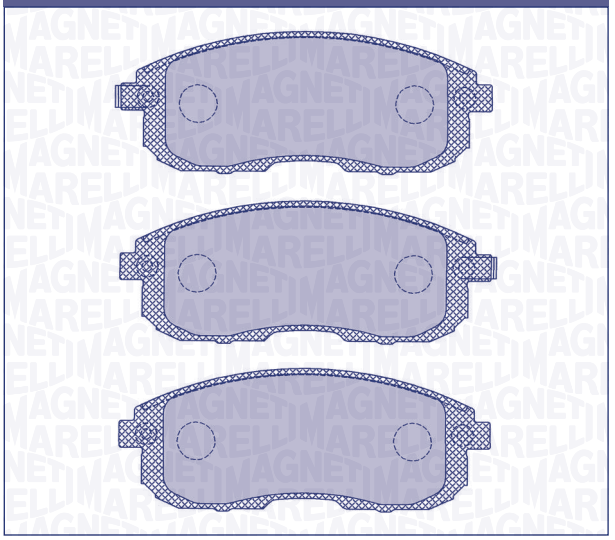

F/R	WVA	W×H×Th (mm)	SiS	Nr. Pz	W.i.	i	Extra kit [Opt]
F	24280 24281 24282	137×53×16,8	ST	3x 1x	1x	–	

FIAT	
Sedici	03/06 →
SUZUKI	
SX4 (GY)	05/06 →
SX4	08/13 →

PF0696

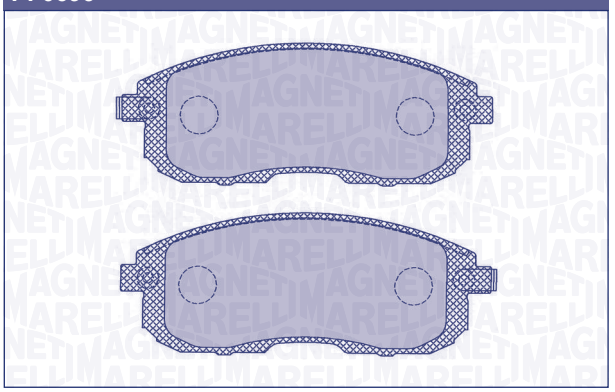

F/R	WVA	W×H×Th (mm)	SiS	Nr. Pz	W.i.	i	Extra kit [Opt]
F	24281 24282	137×53×16,8	ST	2x 2x	4x	–	

NISSAN	
Cube (Z12)	10 →
Tiida	07 →
Tiida 3 volumi	07 →
Juke	10 →

PF0697

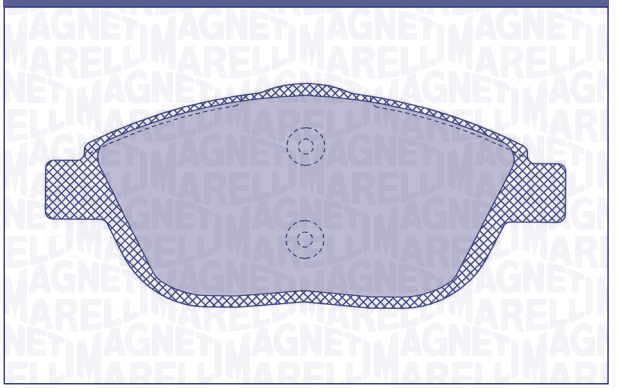

F/R	WVA	W×H×Th (mm)	SiS	Nr. Pz	W.i.	i	Extra kit [Opt]
F	24883	136,7×59,3×18,5	BSC	4x	[-]	–	OK033/ OK079

CITROËN	
C3 Picasso	02/09 →
DS3	04/10 →
DS3 Cabriolet	13 →
PEUGEOT	
2008	03/13 →

PF0698

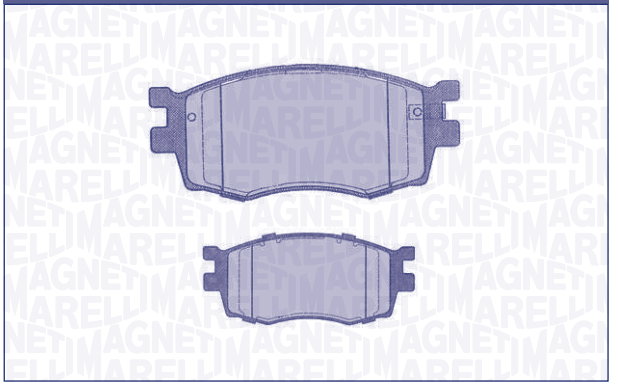

F/R	WVA	W×H×Th (mm)	SiS	Nr. Pz	W.i.	i	Extra kit [Opt]
F	24317 24318 24319	129,8×56×17,5	MN	2x 1x 1x	[-]	antirumore in confezione / antinoise in the box	

HYUNDAI	
Accent II (MC)	11/05 →
i20	08 →
KIA	
Rio II (JB)	03/05 →

PF0699

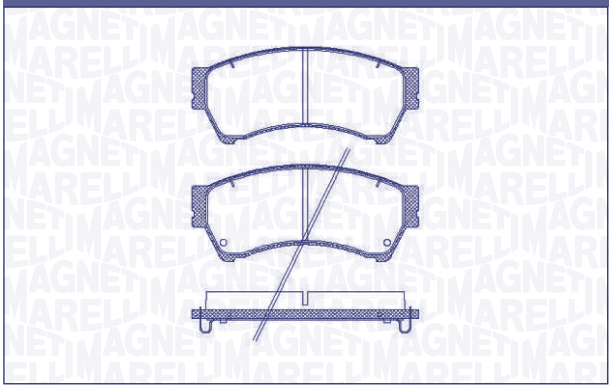

F/R	WVA	W×H×Th (mm)	SiS	Nr. Pz	W.i.	i	Extra kit [Opt]
F	24582 24629 24630	136,9×58,8×16,4	AK	2x 1x 1x	2x	antirumore in confezione / antinoise in the box	

MAZDA	
6 II (GH)	08/07 →

PF0700

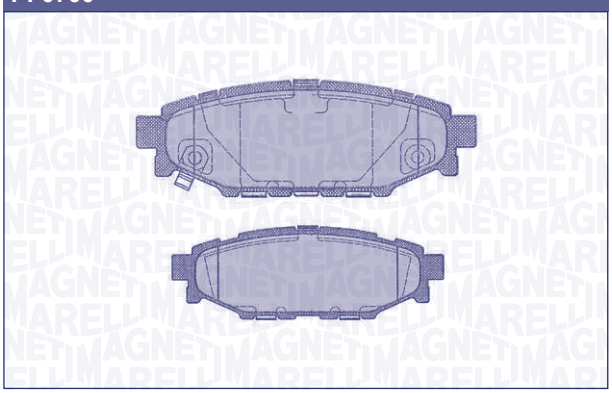

F/R	WVA	W×H×Th (mm)	SiS	Nr. Pz	W.i.	i	Extra kit [Opt]
R	24271 24272	110,3×37,4×14	AK	2x 2x	2x	–	

SUBARU	
Forester III (SH)	01/08 →
Forester IV (SJ)	03/13 →
Impreza III BN/SW	08 →
Legacy BN IV	03 →
Legacy SW IV	03 →
Outback III	00 →
Outback IV	03 →
XV	03/12 →

PF0701

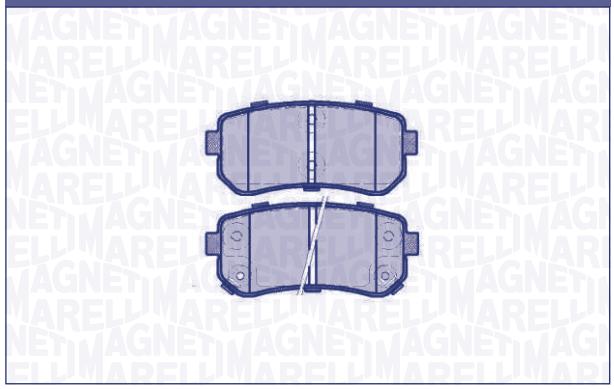

F/R	WVA	W×H×Th (mm)	SiS	Nr. Pz	W.i.	i	Extra kit [Opt]
R	24320 24321 24322	93,1×41×14,9	MN	2x 1x 1x	2x	–	

HYUNDAI	
i20 (PB_)	08 →
i30 (FD_)	10/07 →
i30 (GD_)	12 →
ix35 (LM)	10 →
KIA	
Cee'D BN (ED)	07 →
Cee'D SW (ED)	07 →
Pro Cee'd (ED)	02/08 →
Rio II (JB)	03/05 →
Sportage IV (SL)	10 →

PF0702

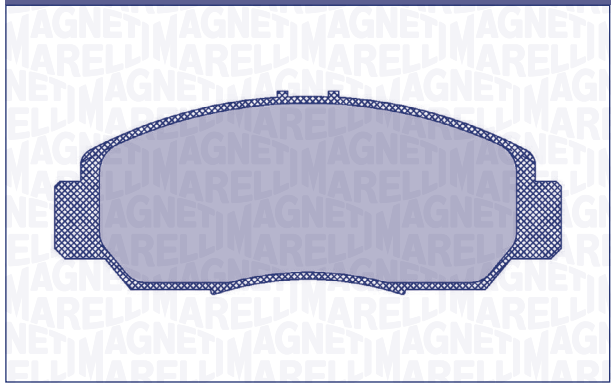

F/R	WVA	W×H×Th (mm)	SiS	Nr. Pz	W.i.	i	Extra kit [Opt]
F	23729 24090 24091	148,7×59×16,4	ST	2x 1x 1x	2x	–	

HONDA	
FR-V	05 →
Stream (RN)	01 →

PF0703

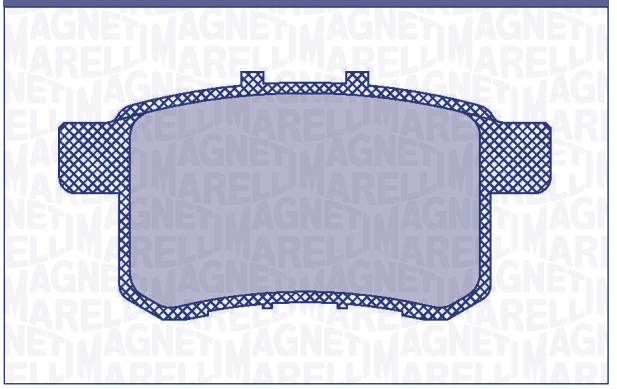

F/R	WVA	W×H×Th (mm)	SiS	Nr. Pz	W.i.	i	Extra kit [Opt]
R	24387 24435 24661 24662	93,5×46,8×14,7	NI	2x 1x 1x	2x	–	

HONDA	
Accord BN VIII	07/08 →
Accord SW VIII	07/08 →

PF0704

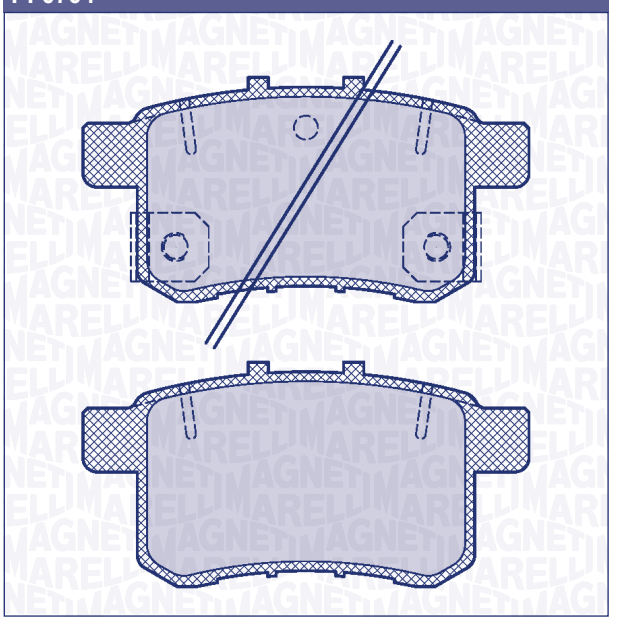

F/R	WVA	W×H×Th (mm)	SiS	Nr. Pz	W.i.	i	Extra kit [Opt]
R	-	93,5×46,8×15,1	NI	2x 1x 1x	2x	–	

HONDA	
Accord BN VIII U.S.A./Jappone	11 →
Accord SW VIII U.S.A./Jappone	11 →

PF0705

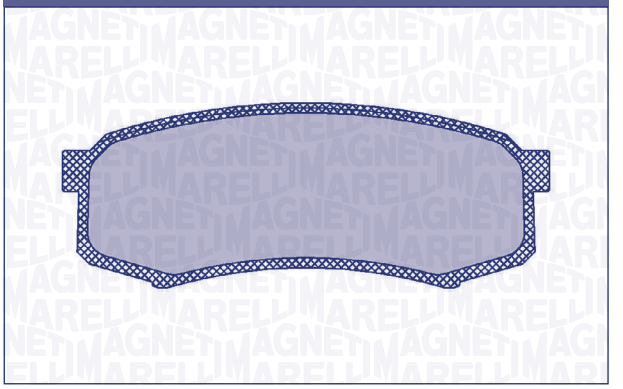

F/R	WVA	W×H×Th (mm)	SiS	Nr. Pz	W.i.	i	Extra kit [Opt]
R	21947	116,1×44×15,3	ST	4x	[-]	–	

TOYOTA	
Land Cruiser 80	92 →
Land Cruiser 80 (J8)	90 →
Land Cruiser 90 (J9)	04/96 →
Land Cruiser (J12)	02 →

PF0706

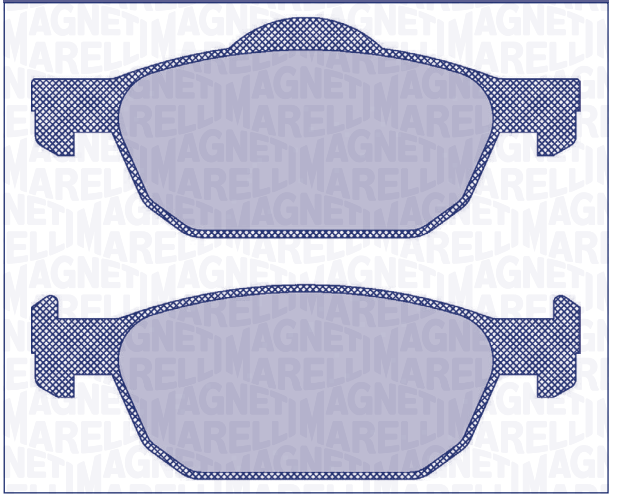

F/R	WVA	W×H×Th (mm)	SiS	Nr. Pz	W.i.	i	Extra kit [Opt]
F	24796 24797 24798	154,8×55,2×17,7 154,8×62,4×17,7	ATE	2x 1x 1x	2x	–	

HONDA	
Accord BN VIII	07/08 →
Accord SW VIII	07/08 →
Civic IX (FK)	02/12 →

PF0707

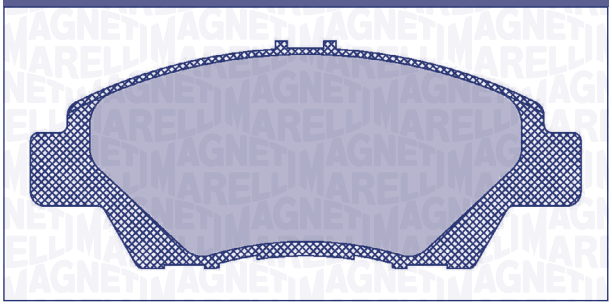

F/R	WVA	W×H×Th (mm)	SiS	Nr. Pz	W.i.	i	Extra kit [Opt]
F	24979 24980 24981	136,3×56,3×15,8	AK	2x 1x 1x	2x	–	

HONDA	
CR-Z (ZF1)	10 →
Insight	09 →
Jazz III (GE)	07/08 →

PF0708

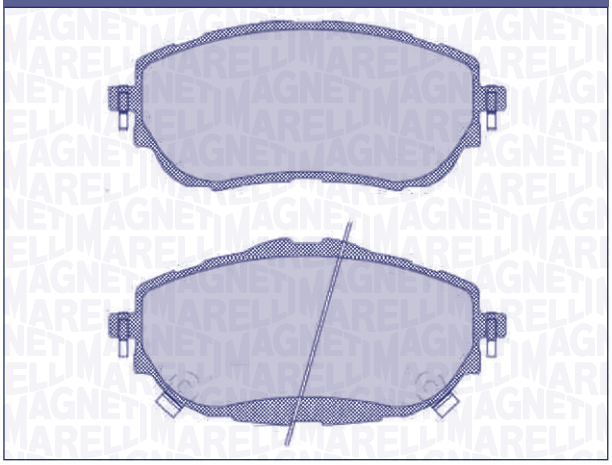

F/R	WVA	W×H×Th (mm)	SiS	Nr. Pz	W.i.	i	Extra kit [Opt]
F	25698 25699 25700	134,2×57,1×18,7 134,2×63,3×18,7	BSC	2x 1x 1x	2x	kit 8 molle / Kit 8 springs	

TOYOTA	
Auris (NZE18_, ZRE18_)	10/12
Corolla (NRE18_, ZRE18_, NDE18_)	13 →

PF0710

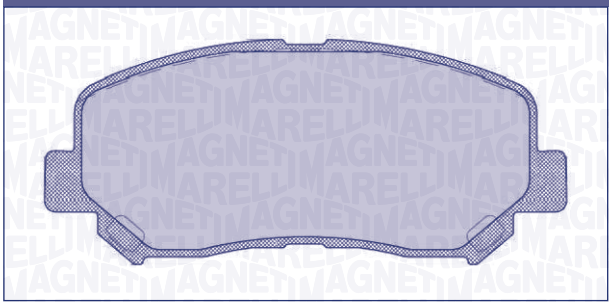

F/R	WVA	W×H×Th (mm)	SiS	Nr. Pz	W.i.	i	Extra kit [Opt]
F	25564	141,9×61,2×15,8	AK	4x	2x	–	

MAZDA	
CX-5 (KE)	11/11 →

PF0711

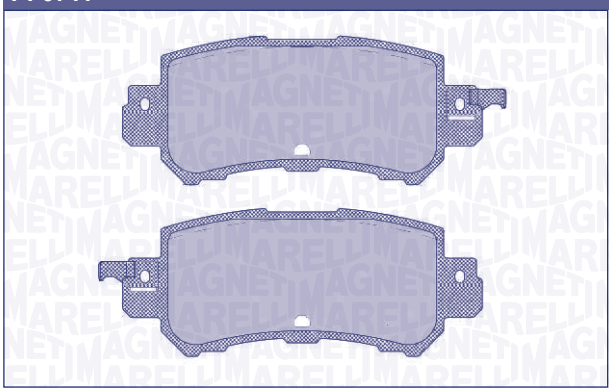

F/R	WVA	W×H×Th (mm)	SiS	Nr. Pz	W.i.	i	Extra kit [Opt]
R	25540 24541	104,6×43,1×14,4	AK	2x 2x	4x	–	

MAZDA	
CX-5 (KE)	11/11 →

PF0712

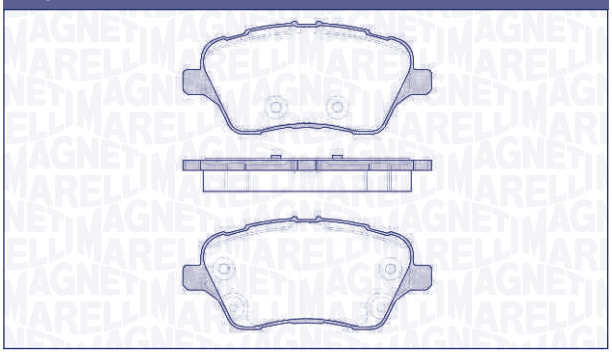

F/R	WVA	W×H×Th (mm)	SiS	Nr. Pz	W.i.	i	Extra kit [Opt]
F	25134 25135	131,7×60,1×17,6	LG	2x 2x	[-]	–	OK030

FORD	
B-Max	10/12 →

PF0713

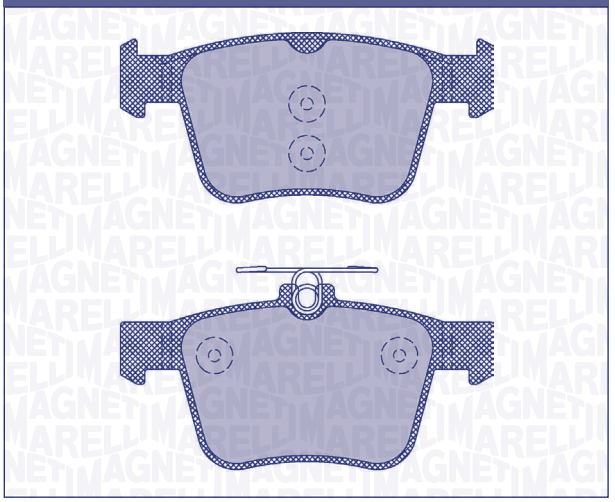

F/R	WVA	W×H×Th (mm)	SiS	Nr. Pz	W.i.	i	Extra kit [Opt]
R	25009 25011	123×61,2×16 123×56,2×16	ATE	2x 2x	[-]	–	

AUDI	
A3 (8VO)	10/12→
A3 2 Volumi (8VA)	10/12→
A3 Limousine (8VS)	13→
VOLKSWAGEN	
Golf VII	11/12→
Golf VII SW	11/12→

PF0714

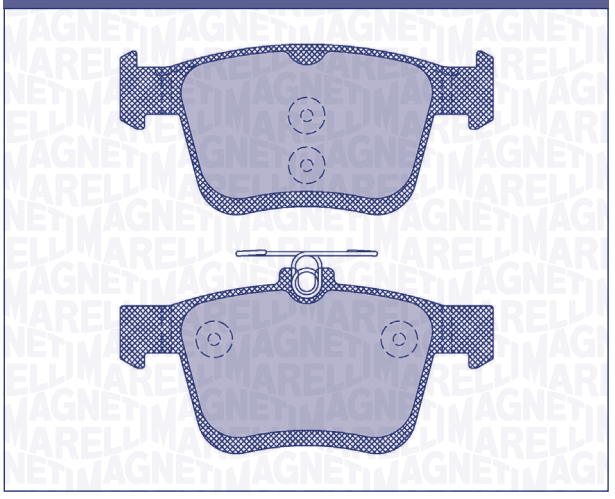

F/R	WVA	W×H×Th (mm)	SiS	Nr. Pz	W.i.	i	Extra kit [Opt]
R	25008 25010	123×61,2×16 123×56,2×16	ATE	2x 2x	[-]	–	

AUDI	
A3 (8VO)	10/12→
A3 2 Volumi (8VA)	10/12→
A3 Limousine (8VS)	13→
A3 Cabriolet (8V7)	13→

PF0714

SEAT	
Leon III (5F)	11/12→
VOLKSWAGEN	
Golf VII	11/12→
Golf VII SW	11/12→

PF0715

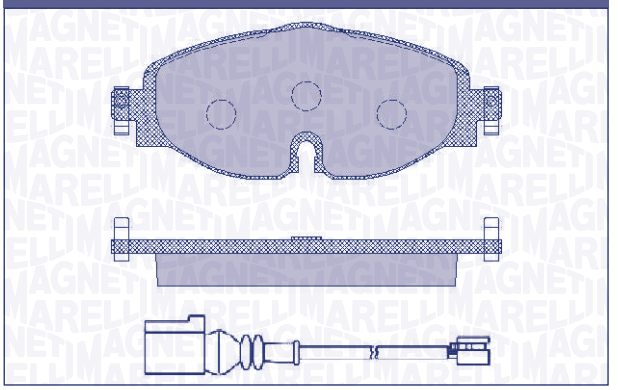

F/R	WVA	W×H×Th (mm)	SiS	Nr. Pz	W.i.	i	Extra kit [Opt]
F	25086	160×64,5×20,3	LG	4x	1x	w.i. L=170mm	OK088

AUDI	
A3 (8VO)	10/12→
A3 2 Volumi (8VA)	10/12→
A3 Limousine (8VS)	13→
A3 Cabriolet (8V7)	13→
SEAT	
Leon III (5F)	11/12→
SKODA	
Octavia IV	11/12→
VOLKSWAGEN	
Golf VII	11/12→
Golf Sportvan	11/12→

PF0716

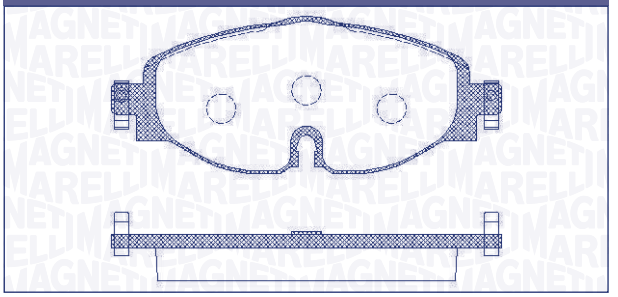

F/R	WVA	W×H×Th (mm)	SiS	Nr. Pz	W.i.	i	Extra kit [Opt]
F	25086	160,2×64,5×20,3	LG	4x	[o]	–	OK088

AUDI	
A3 (8VO)	10/12→
A3 2 Volumi (8VA)	10/12→

PF0716

SEAT	
Leon III (5F)	11/12 →
SKODA	
Octavia IV	11/12 →
VOLKSWAGEN	
Golf VII	11/12 →
Golf Sportvan	11/12 →

PF0717

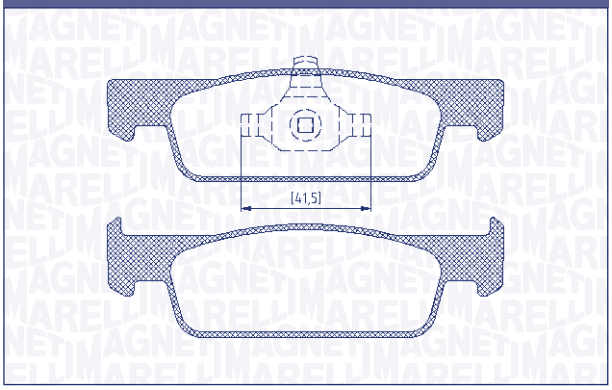

F/R	WVA	W×H×Th (mm)	SiS	Nr. Pz	W.i.	i	Extra kit [Opt]
F	25702 25703	140,2×40×18,1	ATE	2x 2x	[-]	–	

RENAULT	
Clio IV	11/12 →
Clio IV Grandtour	13 →

PF0718

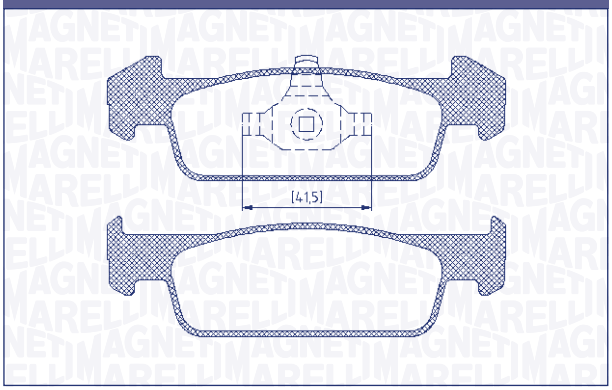

F/R	WVA	W×H×Th (mm)	SiS	Nr. Pz	W.i.	i	Extra kit [Opt]
F	25728 25738	140,2×40×18,1 140,2×44×18,1	ATE	2x 2x	[-]	–	

DACIA	
Logan II	11/12 →
Logan MCV II	02/13 →
Sandero II	01/13 →

PF0723

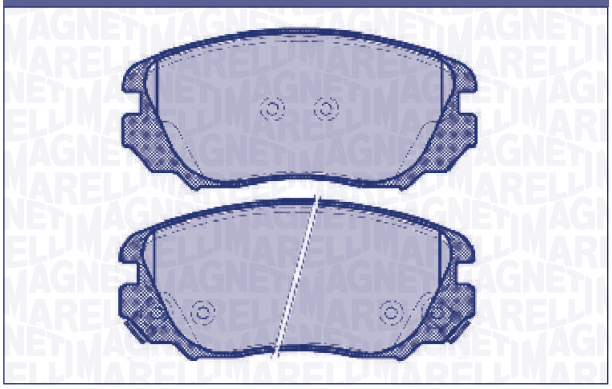

F/R	WVA	W×H×Th (mm)	SiS	Nr. Pz	W.i.	i	Extra kit [Opt]
F	24415 24416 24417	131,5×59,6×19	MN	2x 1x 1x	2x	–	

OPEL	
Insignia BN	08 →
Insignia Sports Tourer	08 →
SAAB	
9-5 II (YS_)	05/10 →
VAUXHALL	
Insignia BN	08 →
Insignia Sports Tourer	08 →

PF0724

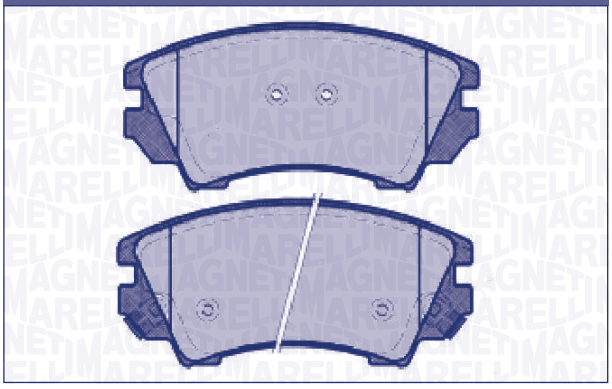

F/R	WVA	W×H×Th (mm)	SiS	Nr. Pz	W.i.	i	Extra kit [Opt]
F	24412 24413 24414	142×66,7×18,8	MN	2x 1x 1x	2x	–	

OPEL	
Cascada (W13)	03/13 →
Insignia SW	08 →
Insignia Sports Tourer	08 →
Zafira (P12)	10/11 →
SAAB	
9-5 II (YS_)	05/10 →

PF0724

VAUXHALL	
Insignia SW	08→
Insignia Sports Tourer	08→

PF0725

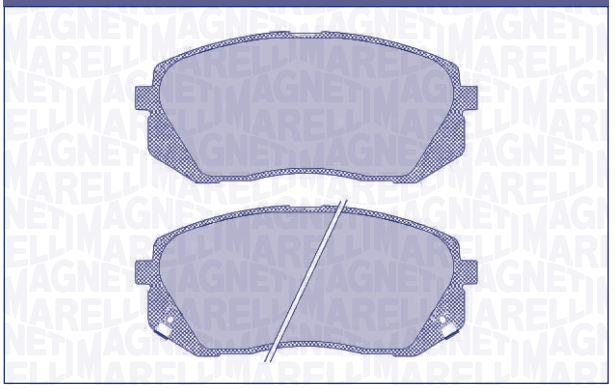

F/R	WVA	W×H×Th (mm)	SiS	Nr. Pz	W.i.	i	Extra kit [Opt]
F	24501 24502 24503	137,8×61×17,6	ST	2x 1x 1x	2x	–	

KIA	
Sportage IV (UN)	07/10→

PF0727

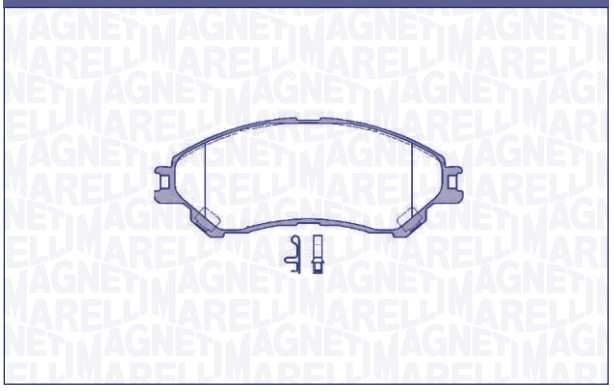

F/R	WVA	W×H×Th (mm)	SiS	Nr. Pz	W.i.	i	Extra kit [Opt]
F	25979	141,9×55,1×15,7	ST	4x	4x	–	

SUZUKI	
S-Cross	13→

PF0735

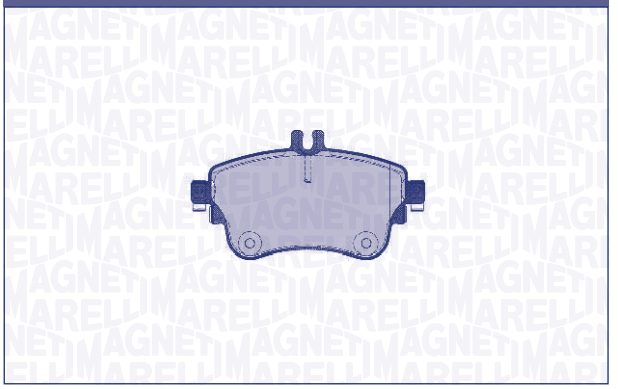

F/R	WVA	W×H×Th (mm)	SiS	Nr. Pz	W.i.	i	Extra kit [Opt]
F	25326	129,1×71,5×19,3	TRW	4x	[o]	–	OK030

MERCEDES	
A (W176)	06/12→
B (W246)	11/11→

PF0734

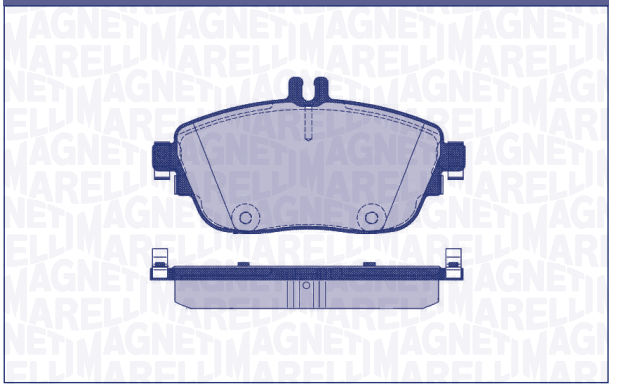

F/R	WVA	W×H×Th (mm)	SiS	Nr. Pz	W.i.	i	Extra kit [Opt]
F	24869	144,1×71,7×19,3	TRW	4x	[o]	–	OK030

MERCEDES	
A (W176)	06/12→
B (W246)	11/11→
CLA Coupé (C117)	13→
GLA (X156)	13→

PF0736

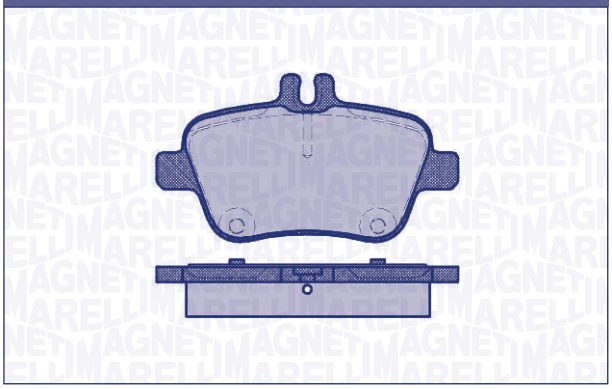

F/R	WVA	W×H×Th (mm)	SiS	Nr. Pz	W.i.	i	Extra kit [Opt]
R	24848	106,4×59,1×18,4	TRW	4x	[o]	–	OK039

MERCEDES	
A (W176)	06/12 →
B (W246)	11/11 →
CLA Coupé (C117)	13 →
GLA (X156)	13 →
SLK (R172)	02/11 →

PF0737

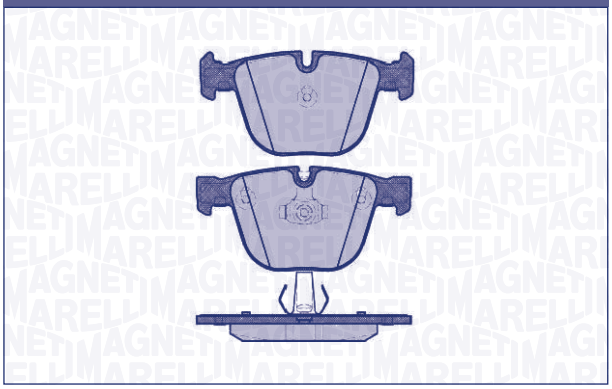

F/R	WVA	W×H×Th (mm)	SiS	Nr. Pz	W.i.	i	Extra kit [Opt]
R	23730 23731	139,7×68×16,8	ATE	2x 2x	[o]	–	

BMW	
5 (E60)	10/03 →
5 Touring (F11)	03/10 →
6 (E63-64)	12/03 →
7 (E65) (E66)	10/02 →
X5 (E70)	02/07 →

PF0738

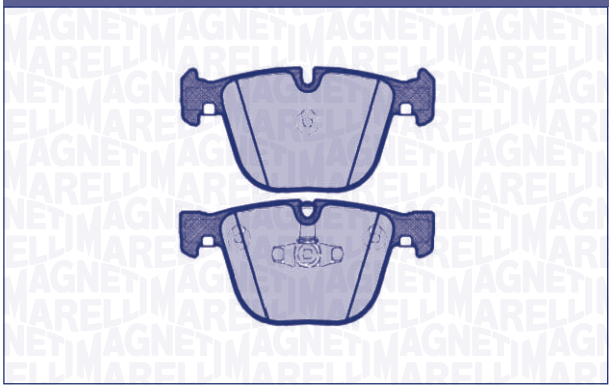

F/R	WVA	W×H×Th (mm)	SiS	Nr. Pz	W.i.	i	Extra kit [Opt]
R	23731 24695	139,7×68×16,8	ATE	2x 2x	[-]	–	

BMW	
5 Touring (F07)	09 →
5 Touring (F11)	03/10 →
7 (F01, F02, F03, F04)	08 →

PF0740

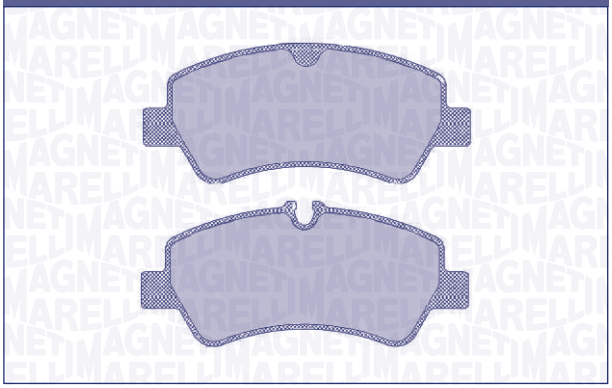

F/R	WVA	W×H×Th (mm)	SiS	Nr. Pz	W.i.	i	Extra kit [Opt]
R	25603 25604	139,9×58,4×17,8	BR	2x 2x	[o]	–	OK033

FORD	
Transit Custom	12 →

PF0741

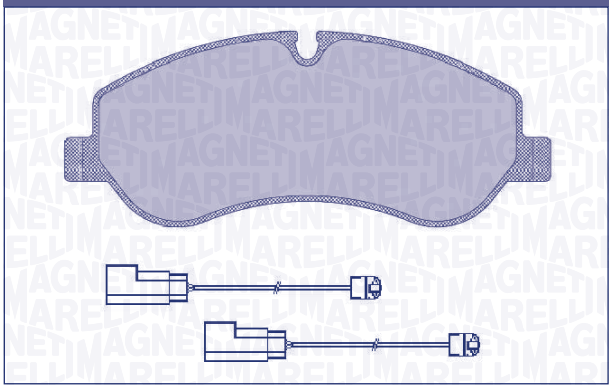

F/R	WVA	W×H×Th (mm)	SiS	Nr. Pz	W.i.	i	Extra kit [Opt]
F	25602	171,7×68,7×17	BR	4x	2x	w.i. L=310mm	

FORD	
Transit Custom	12 →

PF0742

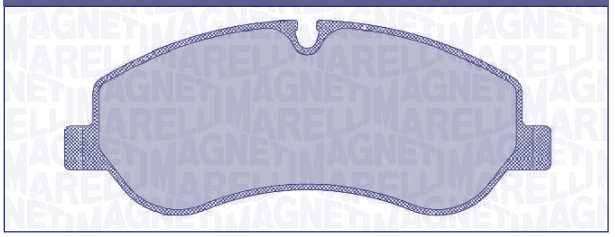

F/R	WVA	W×H×Th (mm)	SiS	Nr. Pz	W.i.	i	Extra kit [Opt]
F	25602	171,7×68,7×17	BR	4x	[o]	–	

FORD	
Transit Custom	12 →

PF0743

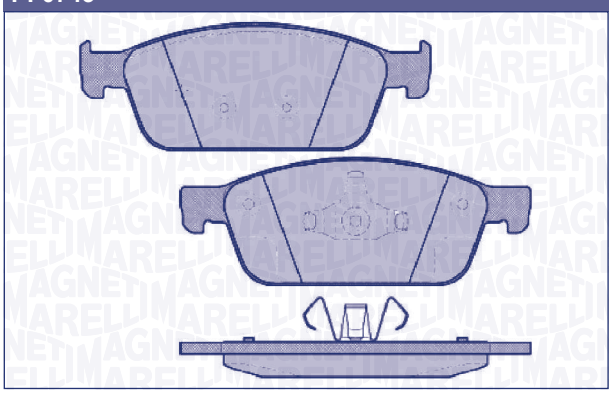

F/R	WVA	W×H×Th (mm)	SiS	Nr. Pz	W.i.	i	Extra kit [Opt]
F	25736 25737	180,1×54,4×17,4	ATE	2x 2x	[-]	–	

FORD	
Focus III ST	07/12 →
Focus III SW ST	07/12 →
Kuga II 4x4	07/12 →

PF0745

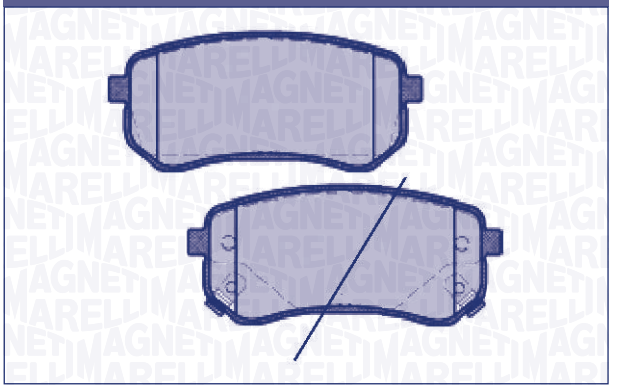

F/R	WVA	W×H×Th (mm)	SiS	Nr. Pz	W.i.	i	Extra kit [Opt]
R	24276 24479 24480	92,4×41×14,8	MN	2x 1x 1x	2x	–	

HYUNDAI	
i10	01/08 →
KIA	
Picanto (BA)	07/04 →
Picanto (TA)	05/11 →

PF0749

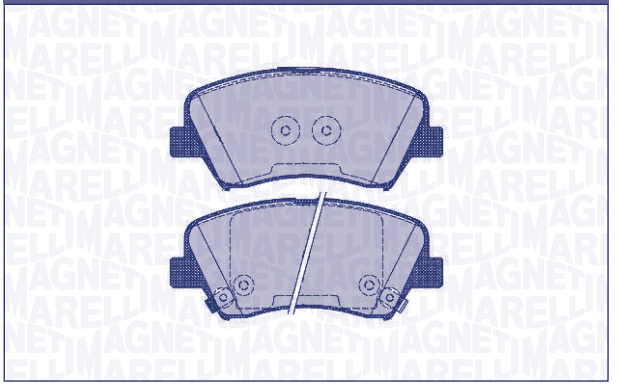

F/R	WVA	W×H×Th (mm)	SiS	Nr. Pz	W.i.	i	Extra kit [Opt]
F	25692 25693 25694	132,9×60×17,5	AK	2x 1x 1x	2x	–	

HYUNDAI	
Accent IV (RB)	11/10 →
Elantra (MD,UD)	06/11 →
Veloster	11 →
KIA	
Cee'D II	11/10 →
Pro Cee'D II	13 →

PF0750

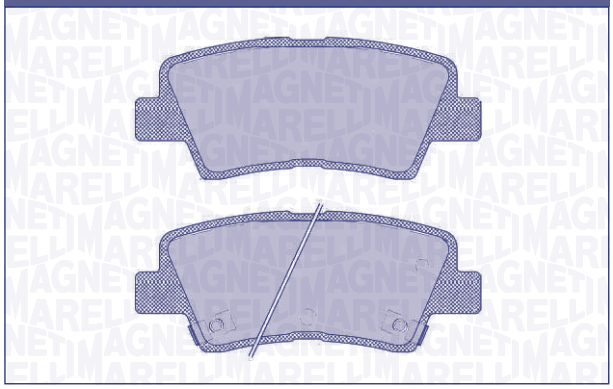

F/R	WVA	W×H×Th (mm)	SiS	Nr. Pz	W.i.	i	Extra kit [Opt]
R	25337 25338 25339	99,7×40,9×15,7	AK	2x 1x 1x	2x	–	

HYUNDAI	
i40 CW (VF) +ABS	07/11 →
KIA	
Carens IV	03/13 →
Cee'D II	05/12 →
Rio III (UB)	09/11 →

PF0751

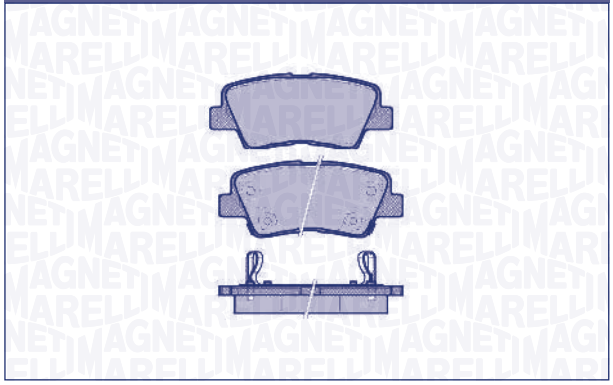

F/R	WVA	W×H×Th (mm)	SiS	Nr. Pz	W.i.	i	Extra kit [Opt]
R	24923 24934 24935 24936	99,9×41×15,5	AK	2x 1x 1x	2x	–	

KIA	
Soul	02/09 →
HYUNDAI	
i40 cw	07/11 →
Sonata VI	01/09 →
Veloster	11 →
SSANGYONG	
Korando	11/10 →

PF0753

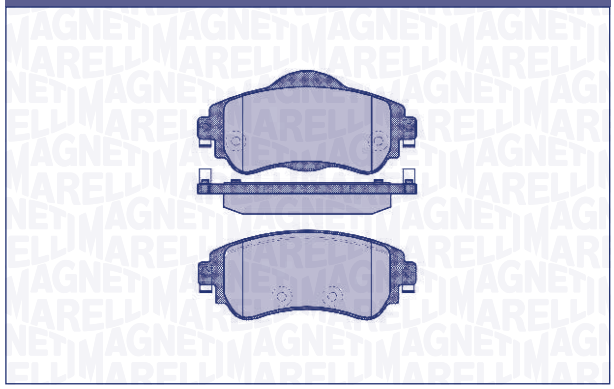

F/R	WVA	W×H×Th (mm)	SiS	Nr. Pz	W.i.	i	Extra kit [Opt]
F	25220 25221	129×53×18,5 129×61×18,5	LG	2x 2x	[-]	–	OK088

CITROËN	
C4 (B7)	11/09 →
DS4	11 →

PF0754

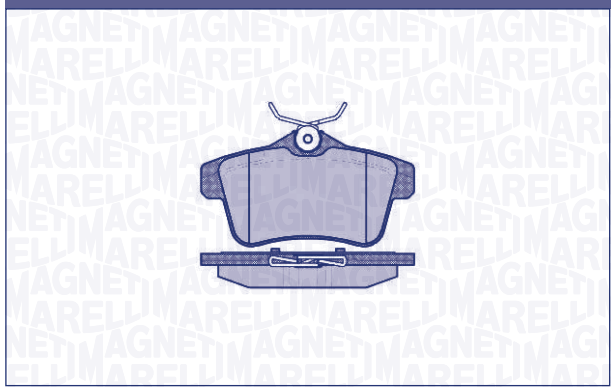

F/R	WVA	W×H×Th (mm)	SiS	Nr. Pz	W.i.	i	Extra kit [Opt]
R	24922	103,8×55,9×17,3	LG	4x	[-]	–	OK039

CITROËN	
C4 (B7)	11/09 →
DS4	11 →
DS5	11 →
PEUGEOT	
3008	06/09 →
5008	09/09 →
RCZ	10 →

PF0756

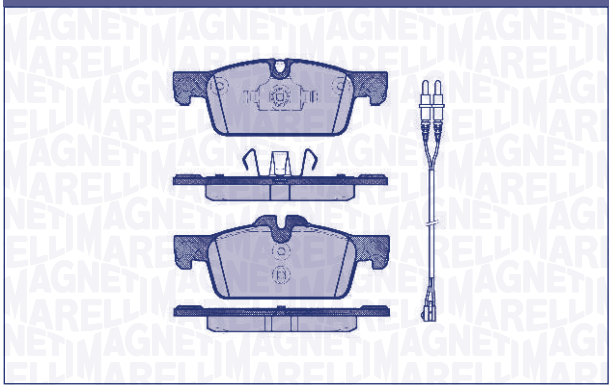

F/R	WVA	W×H×Th (mm)	SiS	Nr. Pz	W.i.	i	Extra kit [Opt]
F	25222 25223	155,1×55×17,3 155,1×60,3×17,3	ATE	2x 2x	2x	w.i. L=310mm	

PEUGEOT	
508	11/10 →

PF0760

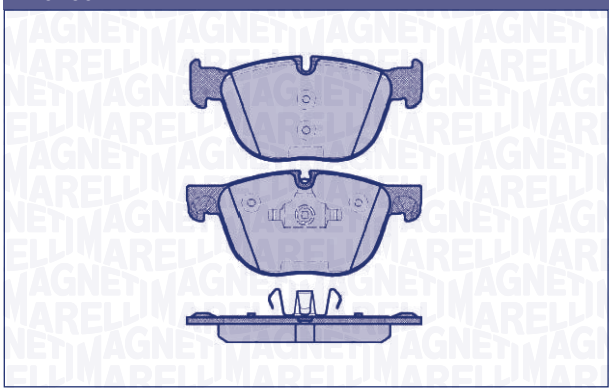

F/R	WVA	W×H×Th (mm)	SiS	Nr. Pz	W.i.	i	Extra kit [Opt]
F	24170 24171	171,3×76,8×19,7 170,3×76,8×19,7	ATE	2x 2x	[o]	–	

BMW	
X5 (E70)	02/07 →
X6 (E71)(E72)	05/08 →

PF0766

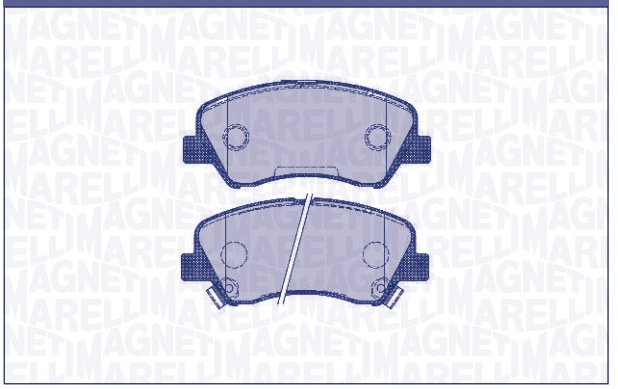

F/R	WVA	W×H×Th (mm)	SiS	Nr. Pz	W.i.	i	Extra kit [Opt]
F	25348 25349 25350	132,7×58,2×17,8	MN	2x 1x 1x	2x	–	

HYUNDAI	
Accent IV (RB)	11/10 →
KIA	
Rio III (UB)	09/11 →

PF0767

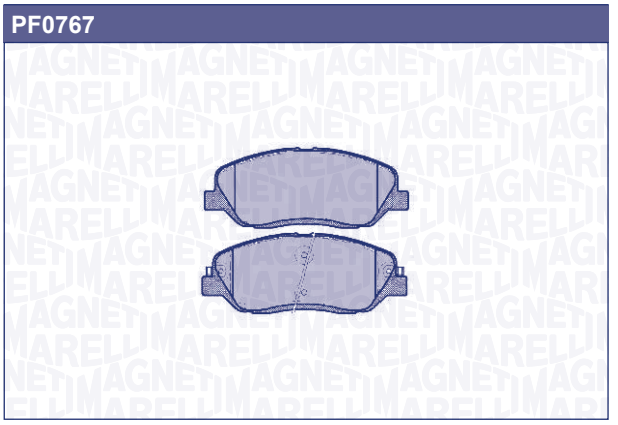

F/R	WVA	W×H×Th (mm)	SiS	Nr. Pz	W.i.	i	Extra kit [Opt]
F	24351 24568 24568	156,8×60,7×17	MN	2x 1x 1x	2x	–	

HYUNDAI	
Santa Fe II (CM)	03/06 →
Santa Fe III	12 →
KIA	
Sorento (XM)	11/09 →
SSANGYONG	
Korando	11/10 →

PF0781

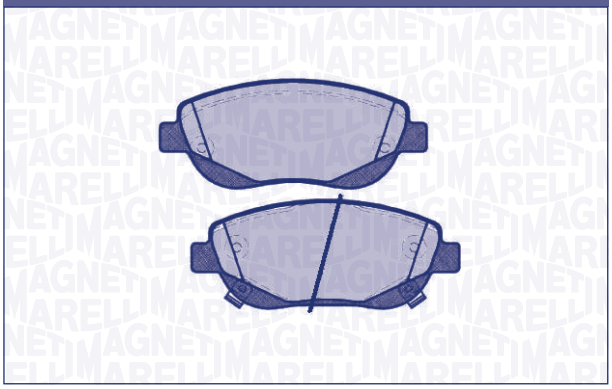

F/R	WVA	W×H×Th (mm)	SiS	Nr. Pz	W.i.	i	Extra kit [Opt]
F	24946 24947 24948	151×61×19	BSC	2x 1x 1x	2x	–	OK079

TOYOTA	
Avensis III BN/SW (T27)	02/09 →

PF0782

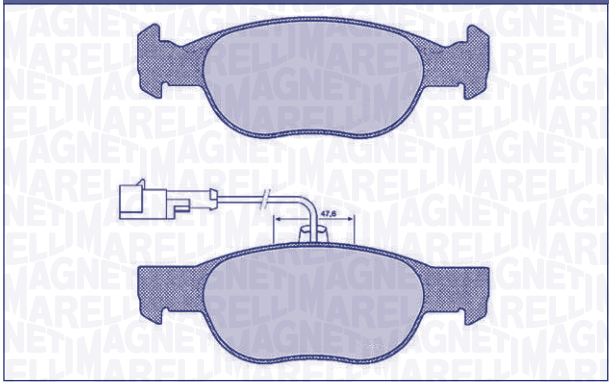

F/R	WVA	W×H×Th (mm)	SiS	Nr. Pz	W.i.	i	Extra kit [Opt]
F	21930 21932	151,4×52×18	ATE	2x 2x	2x	w.i. L=200mm	

ALFA ROMEO	
145	97 →
146	97 →
FIAT	
Brava/Bravo	95 →
Marea	96 →
LANCIA	
Dedra	96 →

PF0783

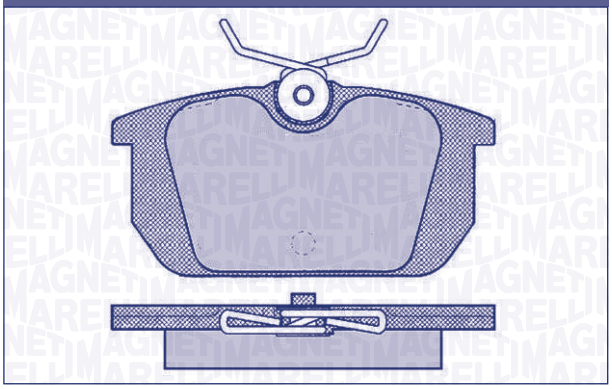

F/R	WVA	W×H×Th (mm)	SiS	Nr. Pz	W.i.	i	Extra kit [Opt]
R	21103	87,2×44,5×14,3	LG	4x	[-]	–	OK032

ALFA ROMEO	
145/146	94 →
155	92 →
GTV	05/95 →
Spider	05/95 →
AUTOBIANCHI	
Y10	89 →
FIAT	
Barchetta (183)	95 →
Brava/Bravo	95 →
Coupé (175)	94 →
Punto (176)	93 →
Tempra	90 →
Tipo	88 →
Uno	89 →
LANCIA	
Dedra	89 →
Delta	93 →

PF0784

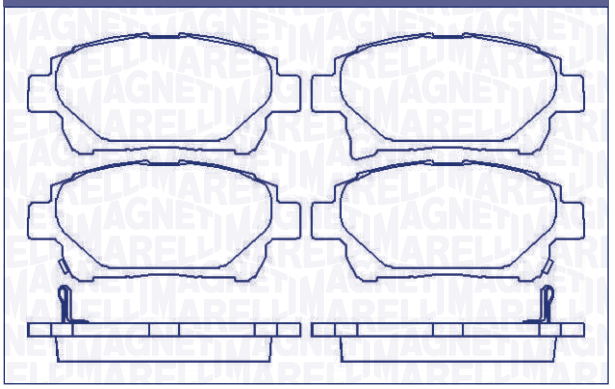

F/R	WVA	W×H×Th (mm)	SiS	Nr. Pz	W.i.	i	Extra kit [Opt]
F	24778 24779 24780 24781	116,4×51,1×16,6 116,4×53,7×16,6	AK	1x 1x 1x 1x	2x	–	

ASTON MARTIN	
Cygnet	04/11 →
TOYOTA	
iQ	09 →

PF0785

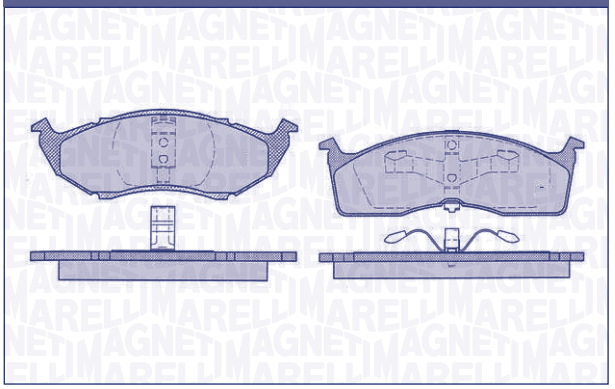

F/R	WVA	W×H×Th (mm)	SiS	Nr. Pz	W.i.	i	Extra kit [Opt]
F	23043 23044	165,2×51,6×17 165,2×54,5×19	KH	2x 2x	[-]	–	

CHRYSLER	
300M	99 →
Grand Voyager II (GS)	01/95 →
LHS	98 →
Neon (PL)	05/94 →
Neon II	11/01 →
New Yorker	04/93 →
Town Country	97 →
Vision	95 →
Voyager II (GS)	01/95 →

PF0785

DODGE	
Caravan (-ABS)	96 →
Grand Caravan (+ABS)	96 →
Intrepid	95 →

PF0786

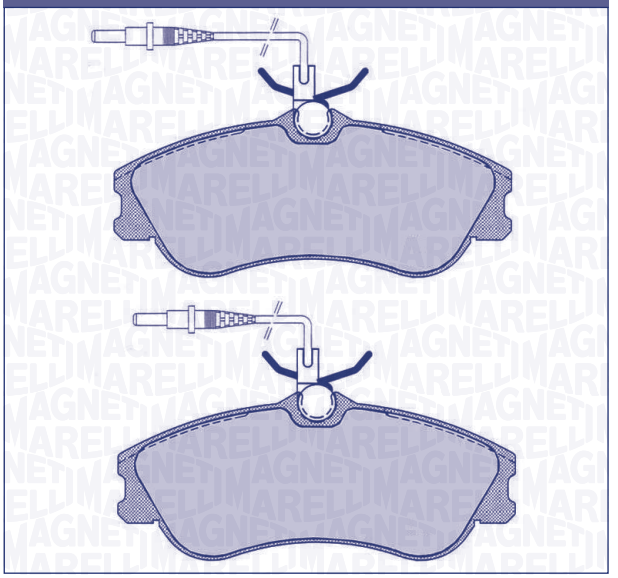

F/R	WVA	W×H×Th (mm)	SiS	Nr. Pz	W.i.	i	Extra kit [Opt]
F	23124 23125	130×56,3×19	LG	2x 2x	4x	w.i. L=2×275/ 2×315mm / 4 antirumore in confezione / 4 antinoise in the box	OK030

CITROËN	
Berlingo Combi	96 →
Berlingo Multispace	96 →
PEUGEOT	
306	97 →
Partner	96 →
Ranch	96 →

PF0787

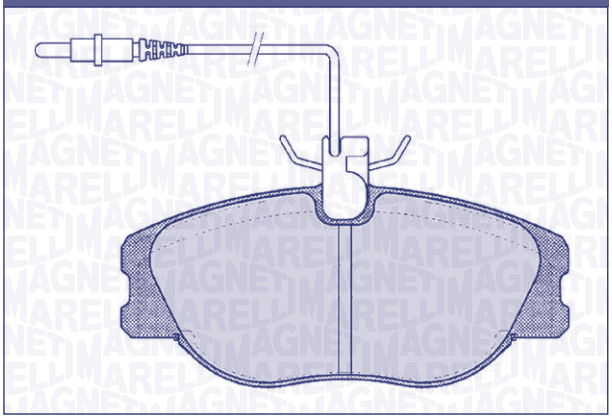

F/R	WVA	W×H×Th (mm)	SiS	Nr. Pz	W.i.	i	Extra kit [Opt]
F	21801 21802	129,9×59×19	LG	4x	4x	w.i. L=240mm	OK030

CITROËN	
Evasion	94 →
Jumpy	95 →
Synergie	94 →
FIAT	
Scudo EL	95 →
Scudo II	04 →
Ulisse (220)	94 →
LANCIA	
Z (220)	95 →
PEUGEOT	
806	96 →

PF0788

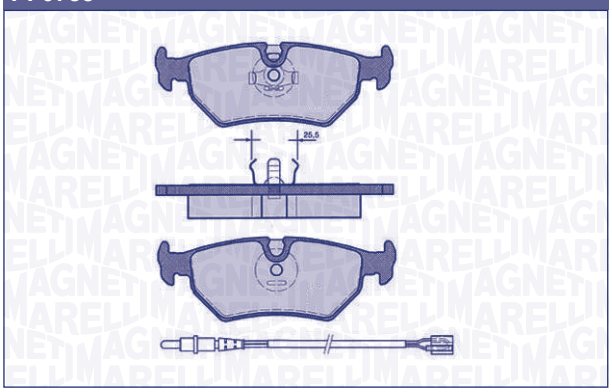

F/R	WVA	W×H×Th (mm)	SiS	Nr. Pz	W.i.	i	Extra kit [Opt]
R	21275 21276	123,1×43,1×17	ATE	2x 2x	2x	w.i. L=300mm	

CITROËN	
Evasion	94 →
Synergie	94 →
FIAT	
Ulisse (220)	94 →

PF0788

LANCIA	
Z (220)	95 →
PEUGEOT	
806	96 →

PF0789

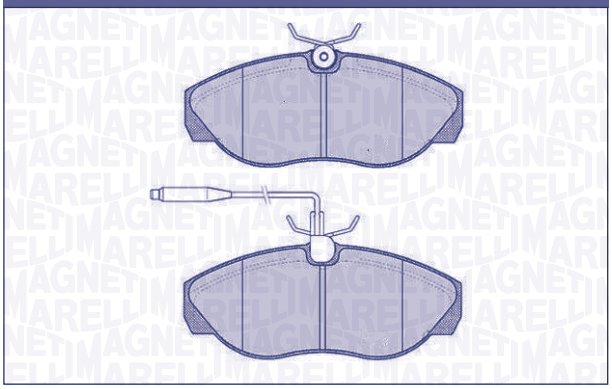

F/R	WVA	W×H×Th (mm)	SiS	Nr. Pz	W.i.	i	Extra kit [Opt]
F	21627 21797 21798	145,1×61×19,5	LG	2x 2x	2x	w.i. L=200mm	OK030

CITROËN	
Jumper (230)	94 →
Relay	02/94 →
FIAT	
Ducato (230)	94 →
PEUGEOT	
Boxer	94 →

PF0790

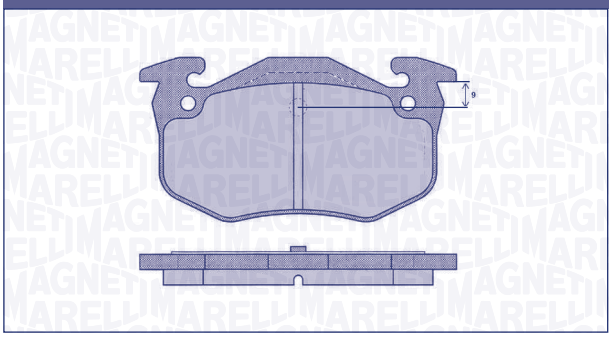

F/R	WVA	W×H×Th (mm)	SiS	Nr. Pz	W.i.	i	Extra kit [Opt]
R	20974	105×56×11	BD	4x	[-]	–	

CITROËN	
Saxo	96 →
Xsara	97 →
PEUGEOT	
206	99 →
306	97 →

PF0790

RENAULT	
Clio	90 →
Megane Classic	95 →
Megane Cabrio (EA)	02/97 →
Megane Coach	95 →

PF0791

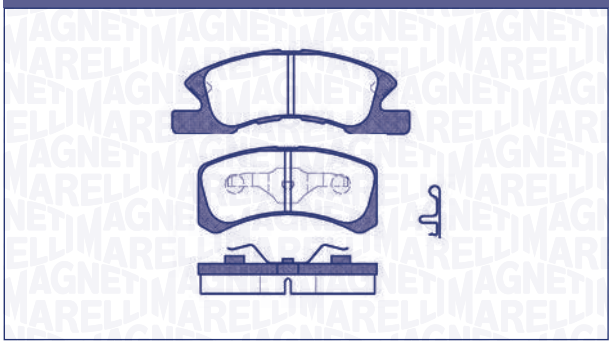

F/R	WVA	W×H×Th (mm)	SiS	Nr. Pz	W.i.	i	Extra kit [Opt]
F	24229 24230	122,1×43,4×15,3 92×44,4×15,3	AK	2x 2x	2x	–	

DAIHATSU	
Charade V (L2)	03/03 →
Cuore VII	05/03 →
Trevis	06/06 →
MITSUBISHI	
Space Star (A0_)	05/12 →

PF0792

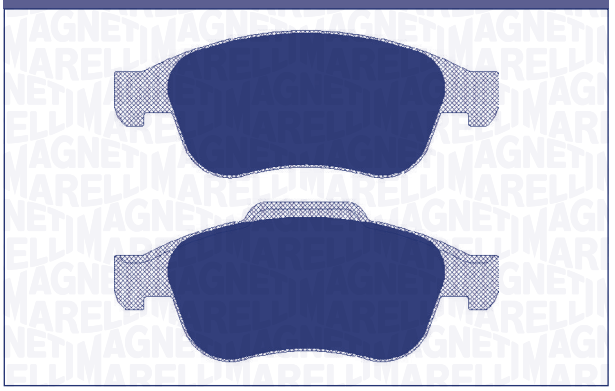

F/R	WVA	W×H×Th (mm)	SiS	Nr. Pz	W.i.	i	Extra kit [Opt]
F		155,3×64,5×19,2 155,1×59,2×19,2	ATE	2x 1x 1x	2x	–	

FIAT	
500X 1.4 M-AIR 140cv	14 →
500X 1.6D 120cv	14 →
JEEP	
Renegade 1.4 M-AIR 140cv	14 →
Renegade 1.6 MJET 120cv	14 →

PF0793

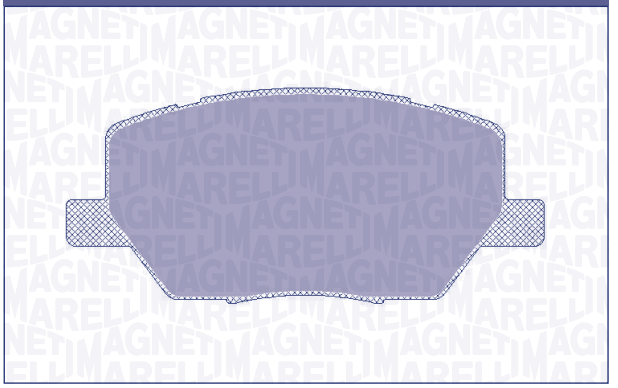

F/R	WVA	W×H×Th (mm)	SiS	Nr. Pz	W.i.	i	Extra kit [Opt]
F		140,9×63,3×20,5	MN	2x 1x 1x	2x	–	

FIAT	
500X 1.6 81Kw	14 →
500X 2.0D	14 →
JEEP	
Renegade 1.4 M-AIR	14 →
Renegade 1.6 BZ 110cv	14 →
Renegade 2.0 MJET	14 →

PF0794

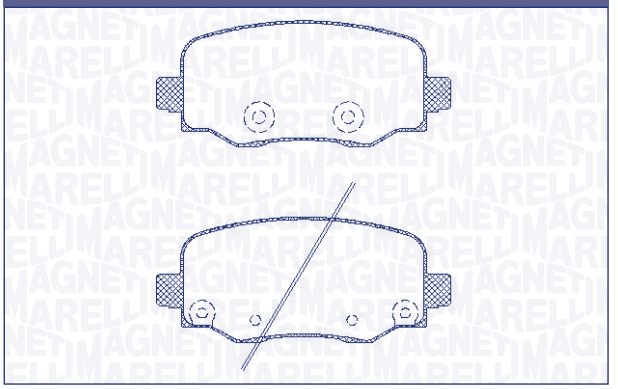

F/R	WVA	W×H×Th (mm)	SiS	Nr. Pz	W.i.	i	Extra kit [Opt]
R	25733 25734 25735	115,5×49,5×17,2	TRW	2x 1x 1x	2x	–	OK039

FIAT	
500X	14 →
JEEP	
Renegade	14 →

PF0796

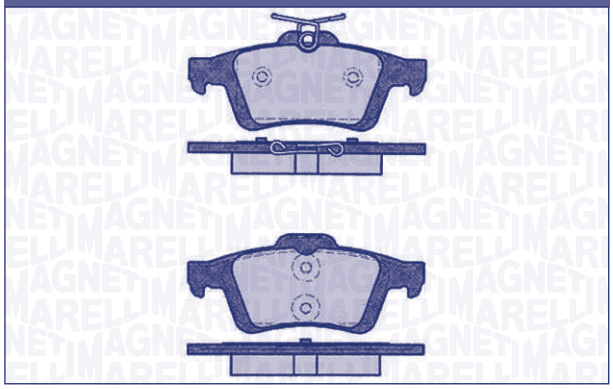

F/R	WVA	W×H×Th (mm)	SiS	Nr. Pz	W.i.	i	Extra kit [Opt]
R	25212 25213	123,1×52×15,3	ATE	2x 2x	[-]	–	

FORD	
Kuga II	07/12 →

PF0797

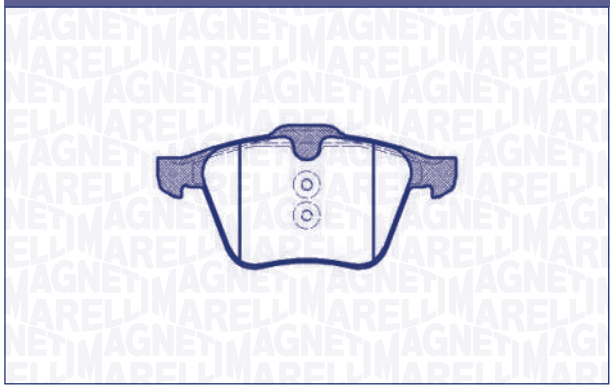

F/R	WVA	W×H×Th (mm)	SiS	Nr. Pz	W.i.	i	Extra kit [Opt]
F	24079	155,2×74,9×19,8 156,4×74,2×18,5	ATE	2x 2x	[-]	–	

FORD	
S-Max	05/06 →

VOLVO	
S60 II	04/10 →
V60	09/10 →
V70 III	07 →
S80 II (AS)	03/06 →

PF0798

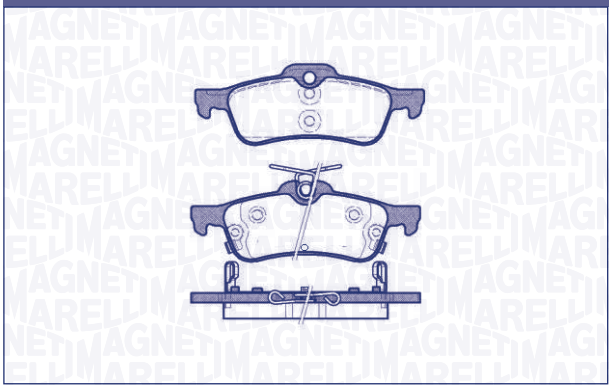

F/R	WVA	W×H×Th (mm)	SiS	Nr. Pz	W.i.	i	Extra kit [Opt]
R	24574 25054 25055	123,1×43,7×14,5	ATE	2x 1x 1x	[-]	–	

HONDA	
Civic IX (FK)	02/12 →

PF0799

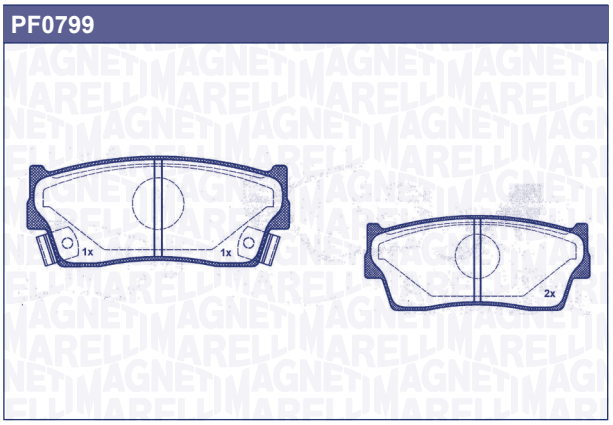

F/R	WVA	W×H×Th (mm)	SiS	Nr. Pz	W.i.	i	Extra kit [Opt]
F	24638 24639 24640	151×60,3×19	BSC	2x 1x 1x	2x	–	OK038

HONDA	
CR-V III	07 →
CR-V IV	12 →

PF0800

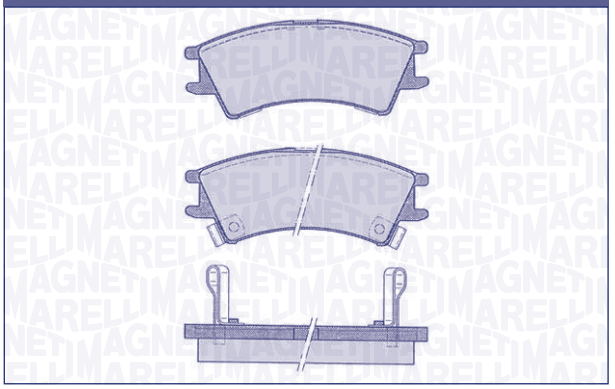

F/R	WVA	W×H×Th (mm)	SiS	Nr. Pz	W.i.	i	Extra kit [Opt]
F	23238 23239 23240	104,6×41,7×16	MN	2x 1x 1x	2x	–	

HYUNDAI	
Amica	99 →
Atos	96 →

PF0801

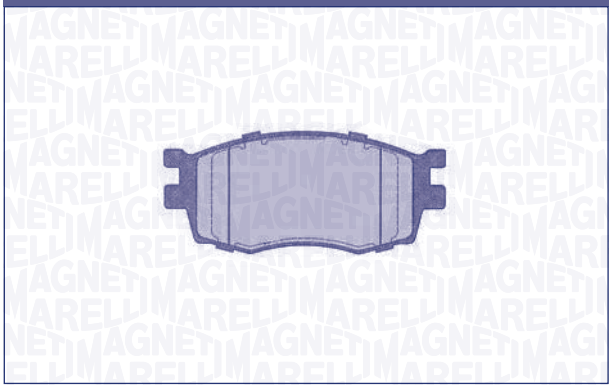

F/R	WVA	W×H×Th (mm)	SiS	Nr. Pz	W.i.	i	Extra kit [Opt]
F	25019 25020 25023	129,8×56×17,5	MN	2x 1x 1x	2x	antirumore in confezione / antinoise in the box	

HYUNDAI	
i20 +ESP	08 →

PF0802

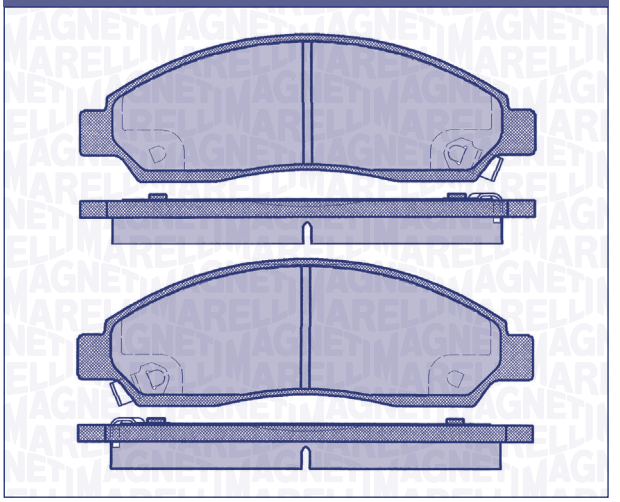

F/R	WVA	W×H×Th (mm)	SiS	Nr. Pz	W.i.	i	Extra kit [Opt]
F	24593 24594 24370	167,4×54,1×17	ST	2x 2x	4x	–	

ISUZU	
D-Max	02 →

PF0803

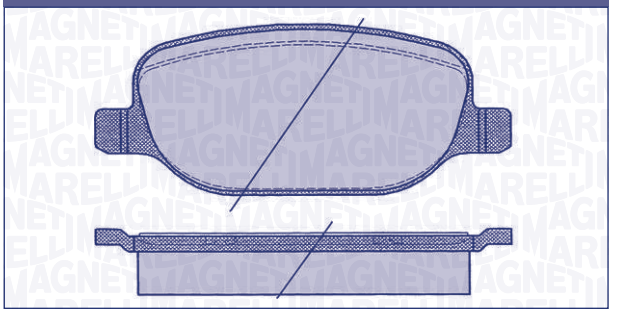

F/R	WVA	W×H×Th (mm)	SiS	Nr. Pz	W.i.	i	Extra kit [Opt]
R	23760	116,7×49,9×17,8	LG	2x 2x	2x	w.i. L=260mm	OK039

ALFA ROMEO	
4C	13 →

PF0804

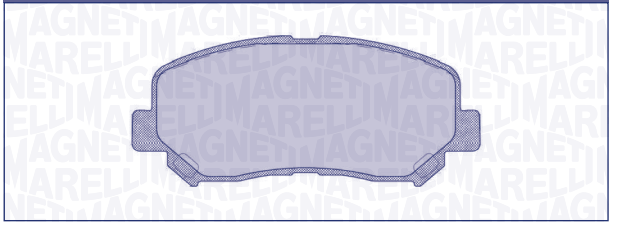

F/R	WVA	W×H×Th (mm)	SiS	Nr. Pz	W.i.	i	Extra kit [Opt]
F	25564	141,9×61,2×21	AK	4x	2x	–	

JEEP	
Cherokee (KL)	13 →

PF0805

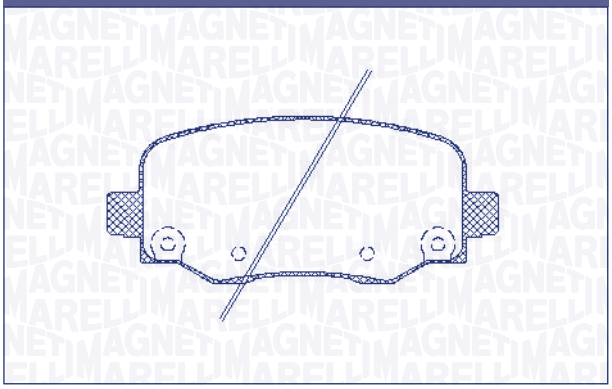

F/R	WVA	W×H×Th (mm)	SiS	Nr. Pz	W.i.	i	Extra kit [Opt]
R	25733 25734 25735	115,5×49,5×16,9	TRW	2x 2x	4x	–	

JEEP	
Cherokee (KL)	13 →

PF0806

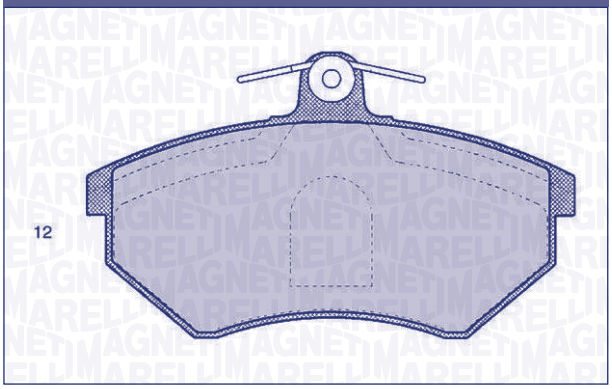

F/R	WVA	W×H×Th (mm)	SiS	Nr. Pz	W.i.	i	Extra kit [Opt]
F	20168	119×69,7×16	LG	4x	[-]	–	OK030

AUDI	
80 Quattro	82 →
90	84 →
SEAT	
Cordoba	93 →
Toledo (+ABS)	91 →
VOLKSWAGEN	
Corrado	87 →
Golf II	83 →
Golf III	91 →
Jetta GT	86 →
Passat	86 →
Scirocco GTI	→ 83
Vento GT	92 →

PF0807

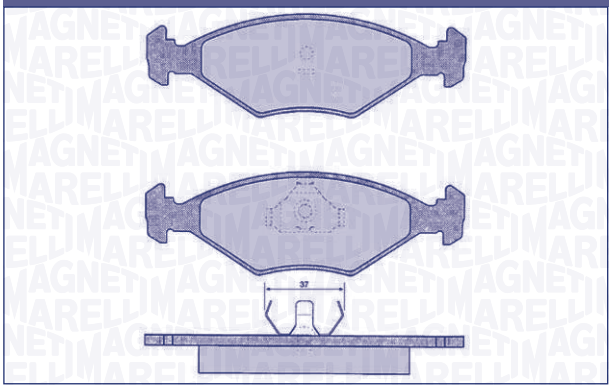

F/R	WVA	W×H×Th (mm)	SiS	Nr. Pz	W.i.	i	Extra kit [Opt]
F	21193 21194	151,5×49×17,8	ATE	2x 2x	[-]	–	

FIAT	
Fiorino	88 →
Fiorino I Pick-up	93 →
Palio	96 →
Penny	89 →
INNOCENTI	
Elba	92 →
Mille	94 →

PF0808

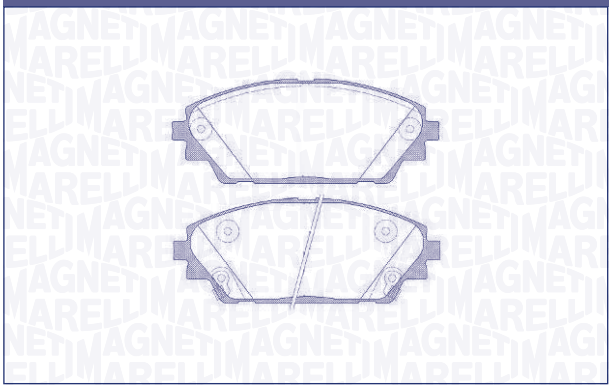

F/R	WVA	W×H×Th (mm)	SiS	Nr. Pz	W.i.	i	Extra kit [Opt]
F	25875 25876 25877	142×55,7×15,8	AK	2x 1x 1x	2x	–	

MAZDA	
3 Skyaktiv (BM)	13 →

PF0809

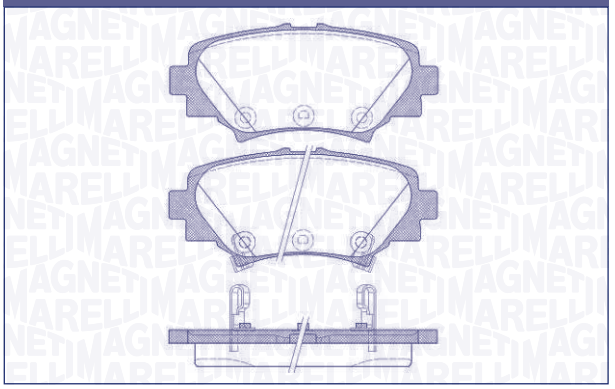

F/R	WVA	W×H×Th (mm)	SiS	Nr. Pz	W.i.	i	Extra kit [Opt]
R	25878 25879 25880	101,4×44,6×13,8	AK	2x 1x 1x	2x	–	

MAZDA

3 Skyaktiv (BM) 13 →

PF0810

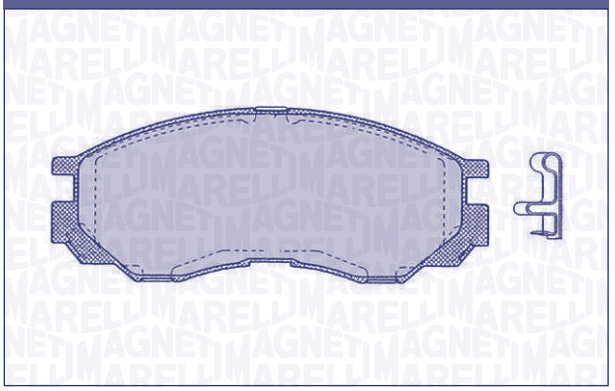

F/R	WVA	W×H×Th (mm)	SiS	Nr. Pz	W.i.	i	Extra kit [Opt]
F	23290	137,8×55×15,7	AK	4x	2x	2 segnalatori acustici / 2 acoustic sensors	

MITSUBISHI

L 200 (K6T) 96 →

Space Gear 95 →

PF0811

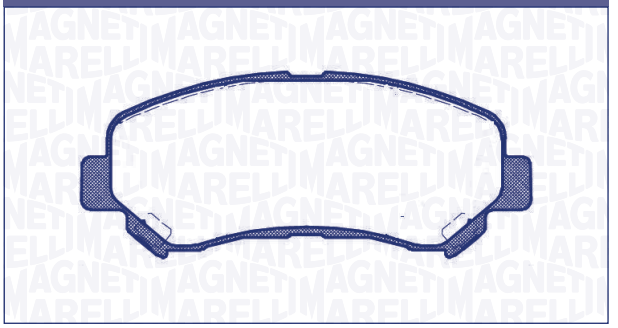

F/R	WVA	W×H×Th (mm)	SiS	Nr. Pz	W.i.	i	Extra kit [Opt]
F		141.9×59,7×17,8	ST	4x	2x	–	

NISSAN

Qashqai II 14 →

PF0812

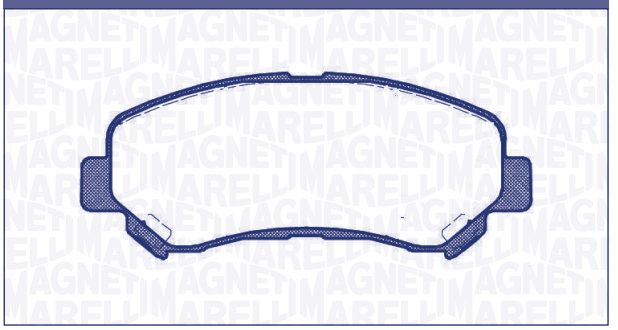

F/R	WVA	W×H×Th (mm)	SiS	Nr. Pz	W.i.	i	Extra kit [Opt]
F		141.9×59,7×16,8	ST	4x	2x	–	

NISSAN

X-Trail (T32) 13 →

PF0813

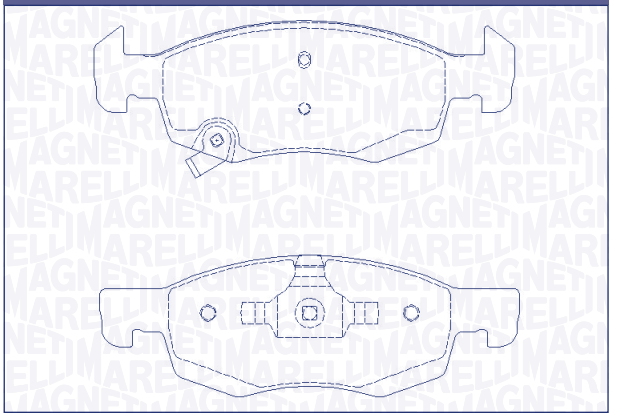

F/R	WVA	W×H×Th (mm)	SiS	Nr. Pz	W.i.	i	Extra kit [Opt]
F		155,1×52,5×17,4	ATE	2x 1x 1x	2x	–	

OPEL

Corsa 14" 14 →

PF0814

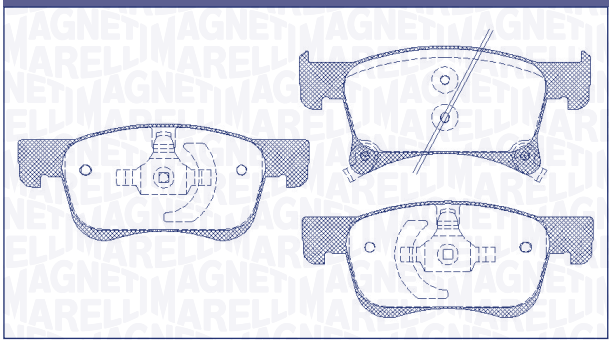

F/R	WVA	W×H×Th (mm)	SiS	Nr. Pz	W.i.	i	Extra kit [Opt]
F		155,1×68×18,2 155,1×61,9×18,2	ATE	1x 1x 1x 1x	2x	–	

OPEL	
Corsa 15"	14 →

PF0815



F/R	WVA	W×H×Th (mm)	SiS	Nr. Pz	W.i.	i	Extra kit [Opt]
F	20780	78,7×63,5×13,4	ST	4x	[-]	–	

BEDFORD	
Rascal Furgone	85 →
DAIHATSU	
850	83 →
1000 DLX	85 →
Bus Wide	83 →
Bus Wide 4x4	86 →
Cab	82 →
Cuore	85 →
Domino	85 →
Dumbo	90 →
Hijet	86 →
Hiset	86 →
S75	83 →
Sneaker	90 →
PIAGGIO	
Porter	93 →
VAUXHALL	
Rascal	90 →

PF0816

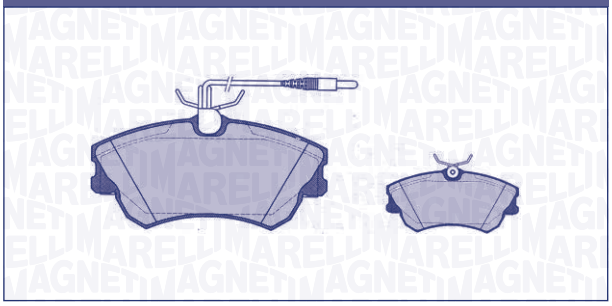

F/R	WVA	W×H×Th (mm)	SiS	Nr. Pz	W.i.	i	Extra kit [Opt]
F	21887 21888 21889	130×63×17,7	LG	2x 2x	2x	4 antirumore in confezione / 4 antinoise in the box	

RENAULT	
Espace	96 →

PF0817

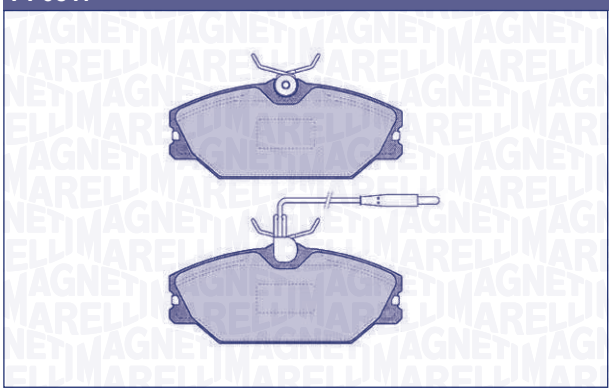

F/R	WVA	W×H×Th (mm)	SiS	Nr. Pz	W.i.	i	Extra kit [Opt]
F	20919 21388	130×55,6×18	LG	2x 2x	2x	w.i. L=280mm	OK032

RENAULT	
Alpine	92 →
Espace	96 →
Laguna	11/97 →
Megane	95 →
Safrane	92 →
Spider	95 →

PF0818

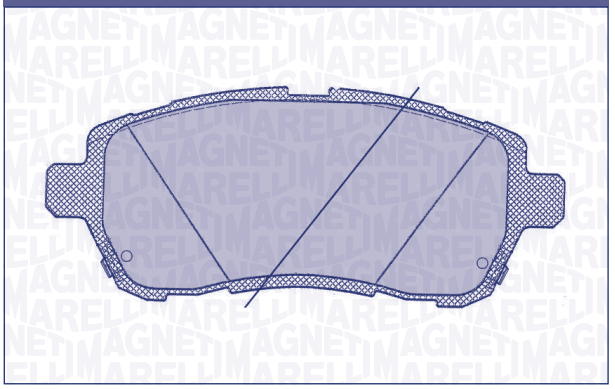

F/R	WVA	W×H×Th (mm)	SiS	Nr. Pz	W.i.	i	Extra kit [Opt]
F	24283 24284 24285	125,7×51.4×15,5	LG	2x 1x 1x	2x	4 antirumore in confezione / 4 antinoise in the box	

SUZUKI	
Swift IV	10/10 →

PF0819

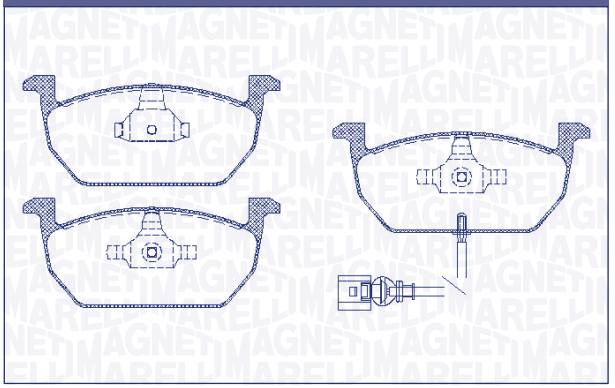

F/R	WVA	W×H×Th (mm)	SiS	Nr. Pz	W.i.	i	Extra kit [Opt]
F		146,1×62,5×17,5	ATE	2x 1x 1x	1x	w.i. L=155mm	

VOLKSWAGEN	
Golf VII Ø Disc 276/15"	11/12 →

PF0820

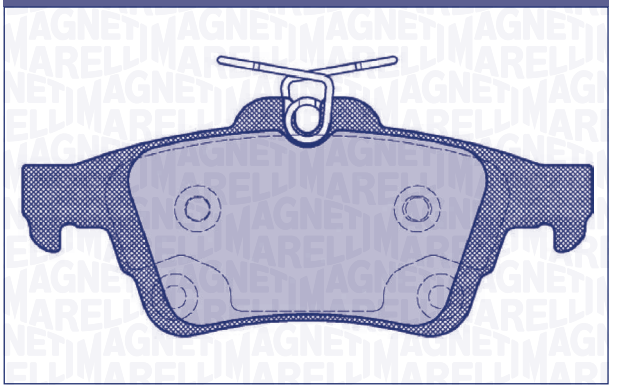

F/R	WVA	W×H×Th (mm)	SiS	Nr. Pz	W.i.	i	Extra kit [Opt]
R	25212 25213	123,1×52×16,4	ATE	2x 2x	[-]	–	

VOLVO	
C30 U.S.A./Canada/Giappone	10/06 →
V50 (MW) U.S.A./Canada/Giappone	04 →

PF0821



F/R	WVA	W×H×Th (mm)	SiS	Nr. Pz	W.i.	i	Extra kit [Opt]
R	24137 23482	123,1×52×15,3	ATE	2x 2x	[-]	–	

VOLVO	
V40 II D2 114cv	3 →Dec

PF0822

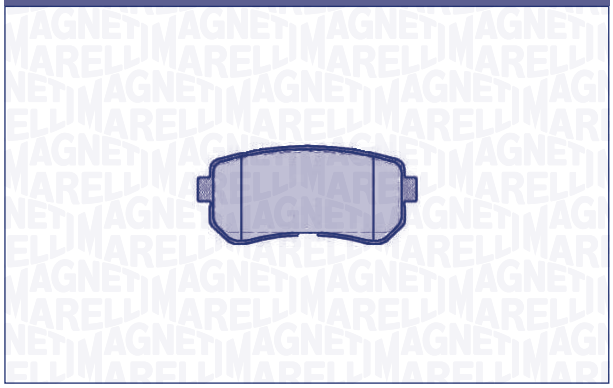

F/R	WVA	W×H×Th (mm)	SiS	Nr. Pz	W.i.	i	Extra kit [Opt]
R	25677 25678 25679	93,1×41×15,4	MN	2x 1x 1x	2x	–	

KIA	
Picanto II (TA)	5/11 →

PF0823

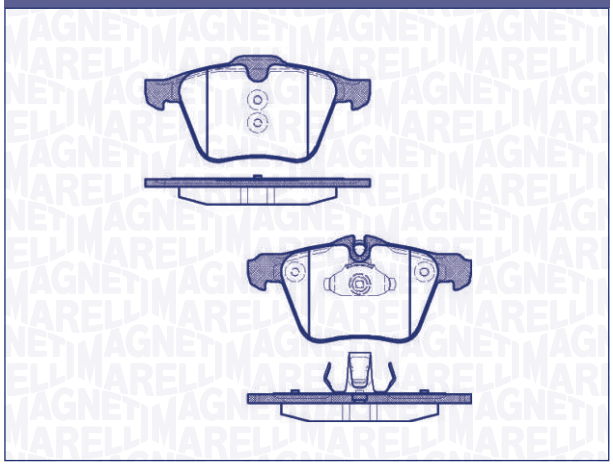

F/R	WVA	W×H×Th (mm)	SiS	Nr. Pz	W.i.	i	Extra kit [Opt]
F	24079 24080 25083	155,2×75,1×18,8 155,8×74,2×20,2	ATE	2x 2x	[o]	–	

JAGUAR	
F-Type Cabriolet	12 →
F-Type	12 →
XJ (X35_)	11 →

PF0824

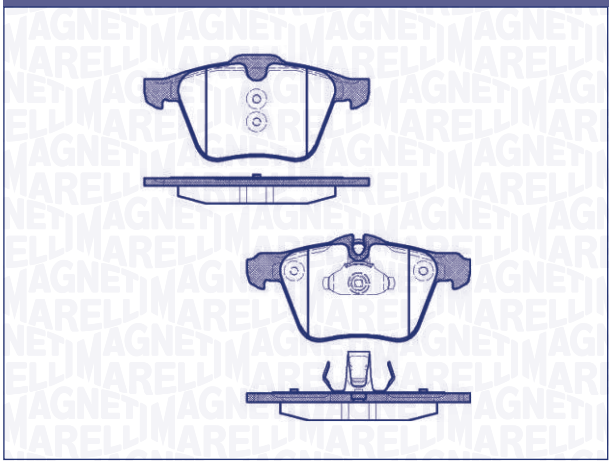

F/R	WVA	W×H×Th (mm)	SiS	Nr. Pz	W.i.	i	Extra kit [Opt]
F	24521	155,2×75,1×18,8 156,4×74,2×20,2	ATE	2x 2x	[o]	–	

JAGUAR	
XF (_J05_, CC9)	08 →

Optional Kit

MAGNETI MARELLI

OK010 78 mm

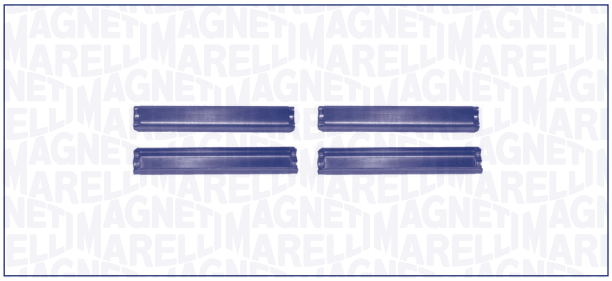

OK011 65,5 mm

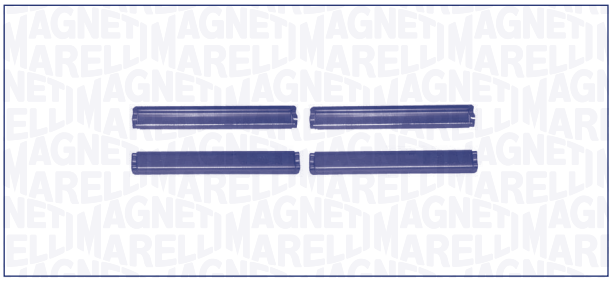

OK012 M8×1,0 mm

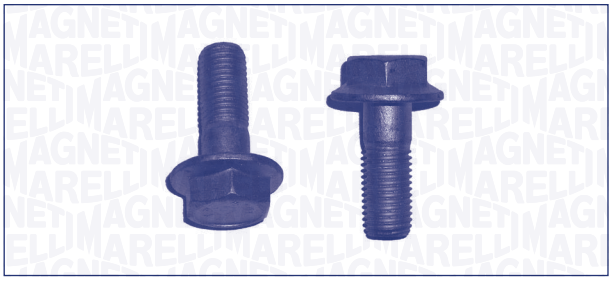

OK013 68,7 mm

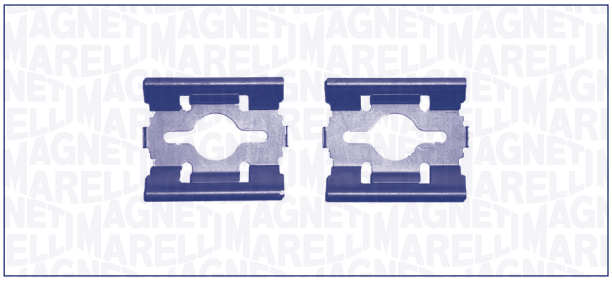

OK014 62,5 mm

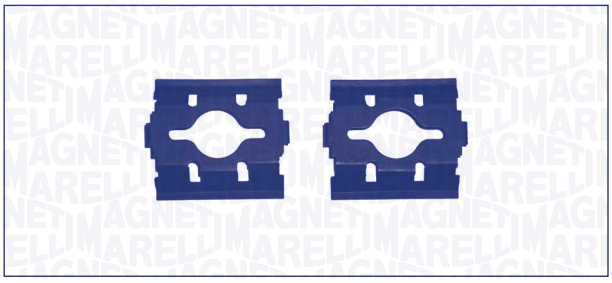

MAGNETI MARELLI

OK015 77/M8×1,25 mm

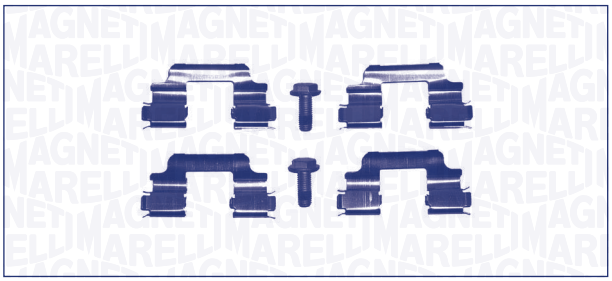

OK016 67,7/M8×1,25 mm

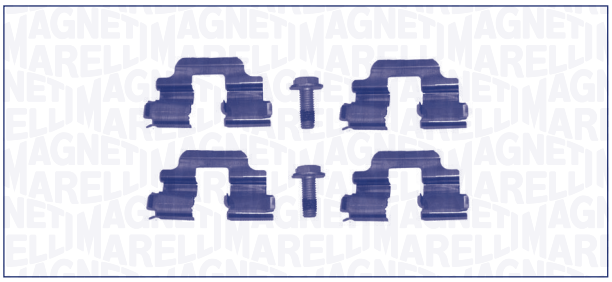

OK017 82,9 mm

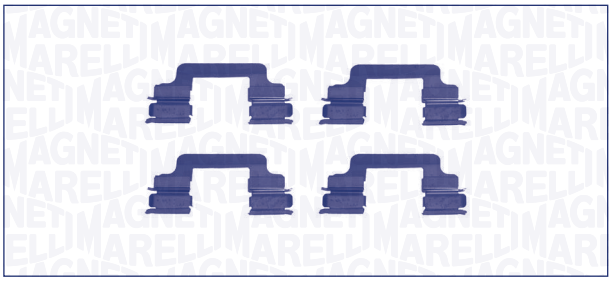

OK018 775 mm

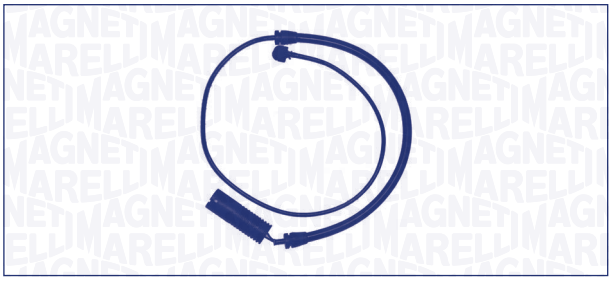

OK019 605 mm

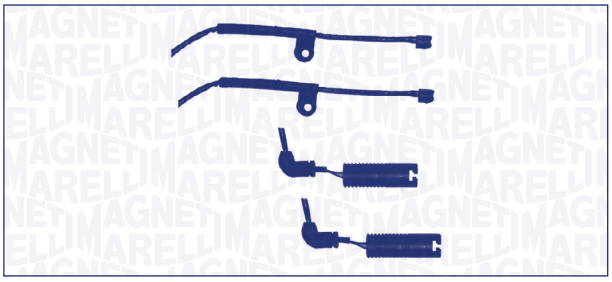

MAGNETI MARELLI

OK020	95 mm

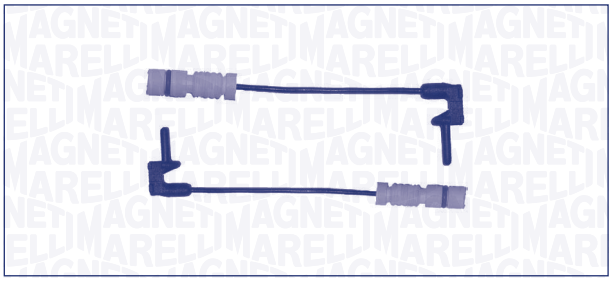

OK021	210 mm

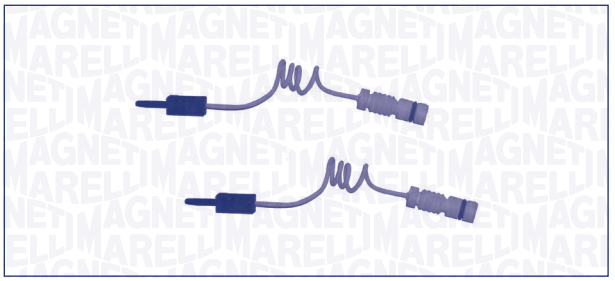

OK022	1340 mm

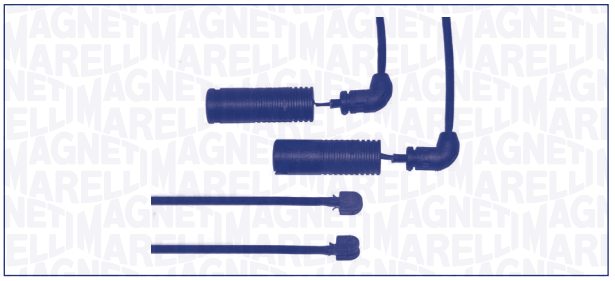

OK023	210 mm

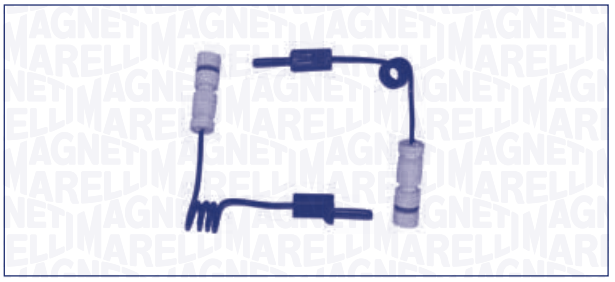

OK024	95 mm

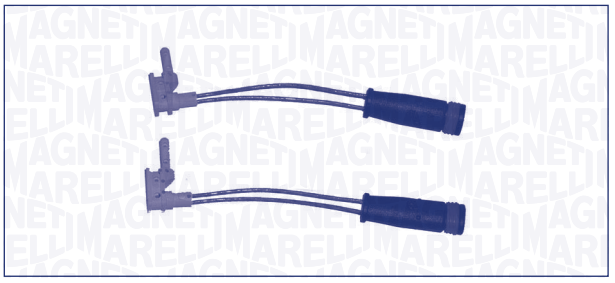

MAGNETI MARELLI

OK025	680 mm

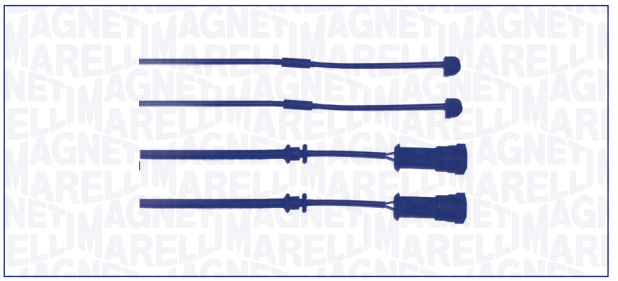

OK026	95mm

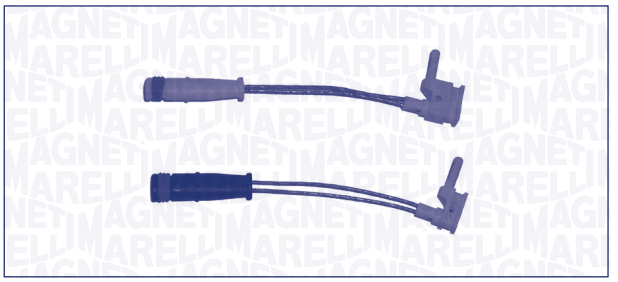

OK027	95 mm

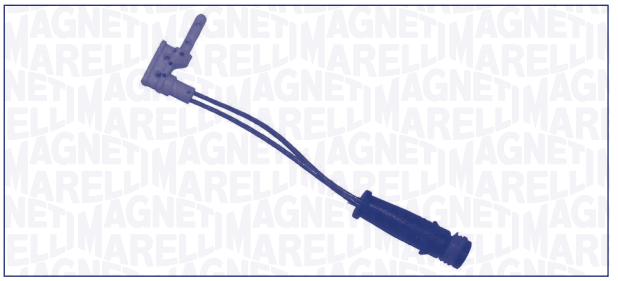

OK028	-

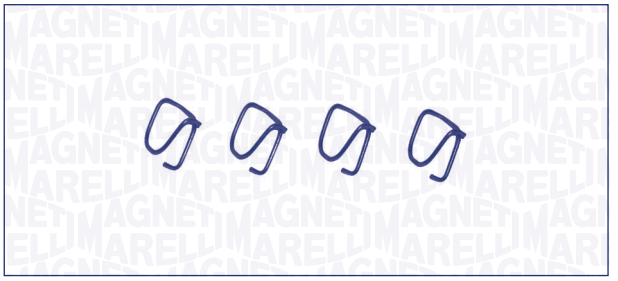

OK029	12,9×8×56 mm

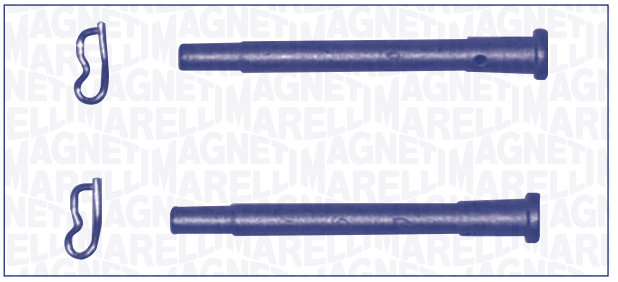

OK030	M8×1,25 mm

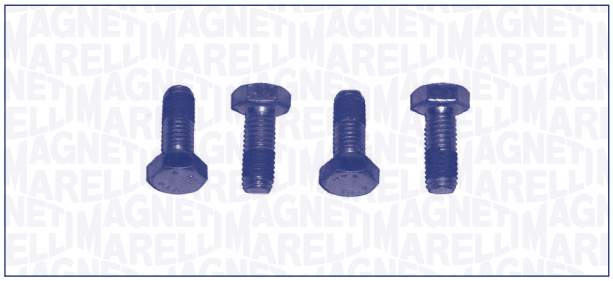

OK031	M8×1,25×90 mm



OK032	M8×1,25 mm

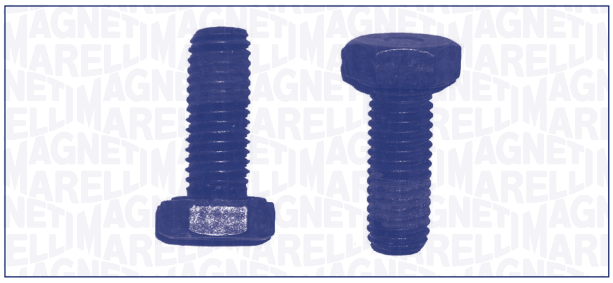

OK033	M8×1,0 mm



OK034	M8×1,0 mm

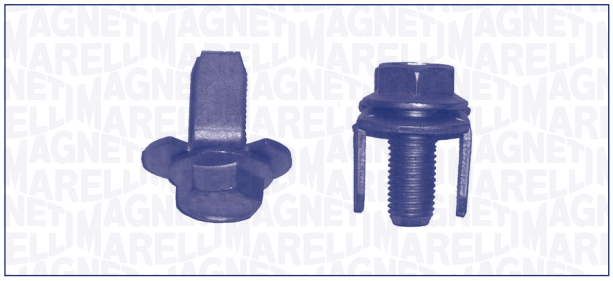

OK035	21,1 mm

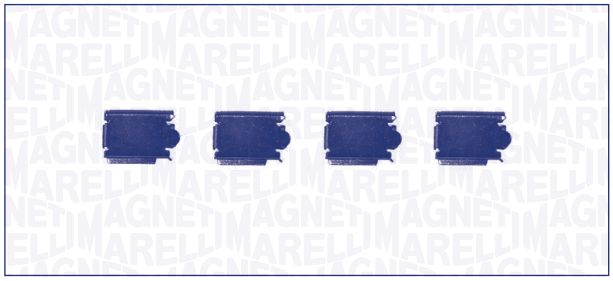

OK036	21,1 mm

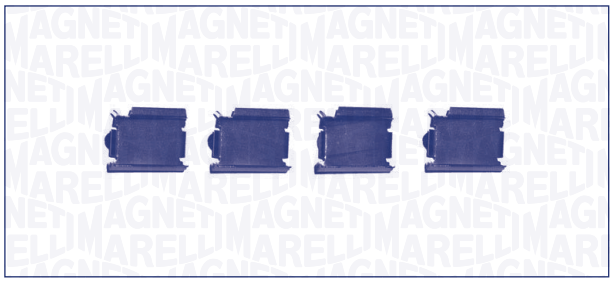

OK037	M8×1,0 mm

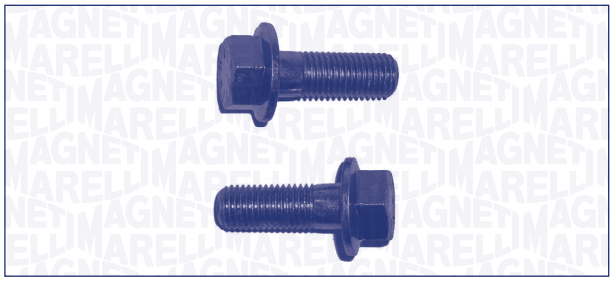

OK038	27 mm

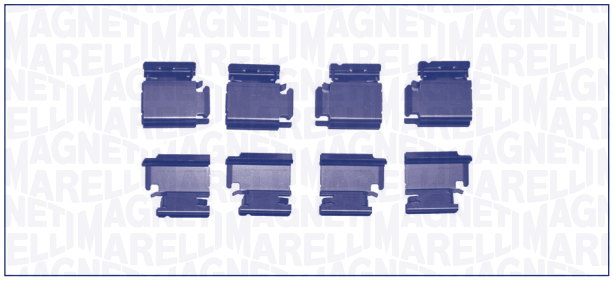

OK039	M8×1,25 mm

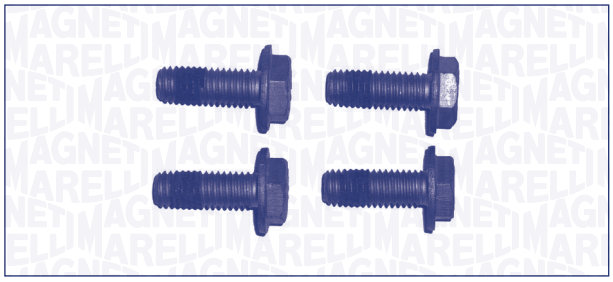

MAGNETI MARELLI

OK040 22,5 mm

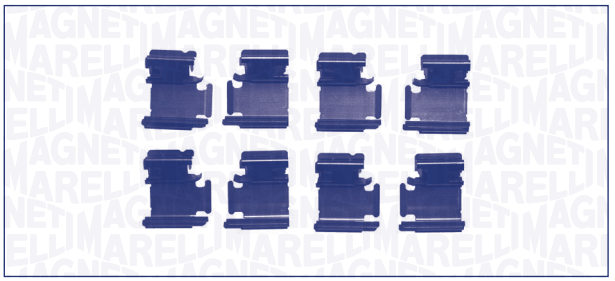

OK041 52 mm

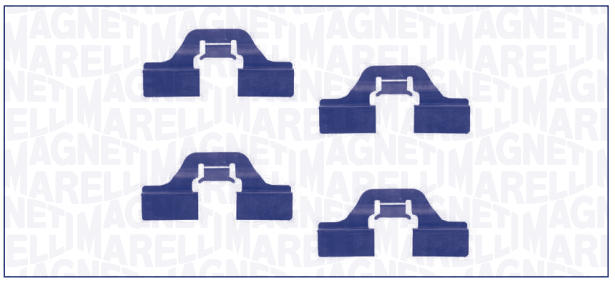

OK042 95 mm

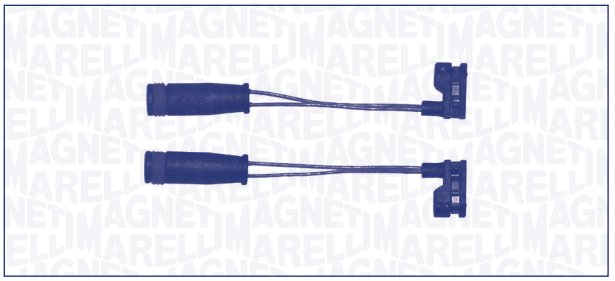

OK043 65,2 mm

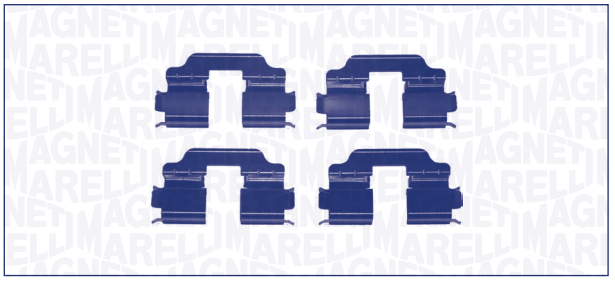

OK044 77,8 mm

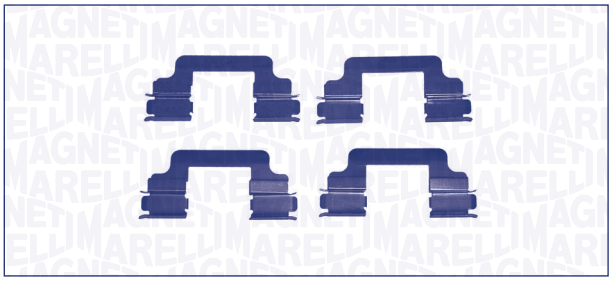

MAGNETI MARELLI

OK045 56,8/M8×1,25 mm

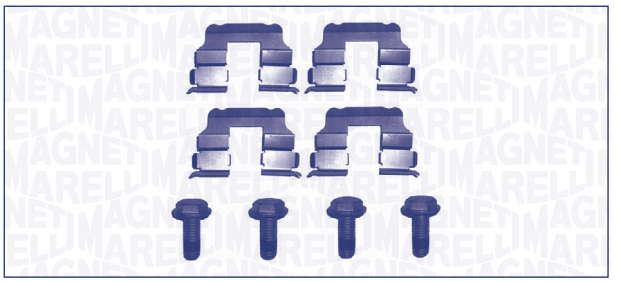

OK046 65,7/M8×1,25 mm

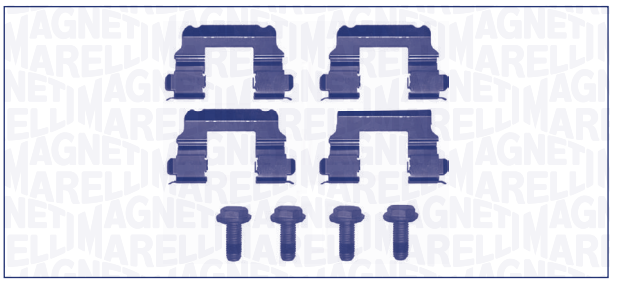

OK047 670 mm

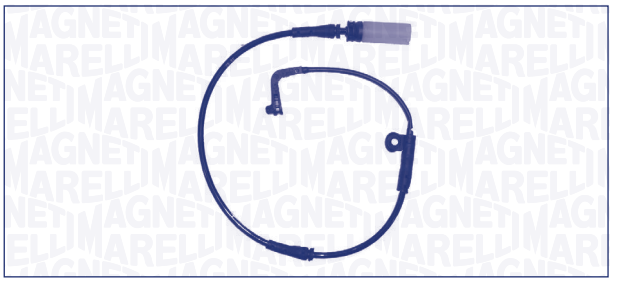

OK048 635 mm

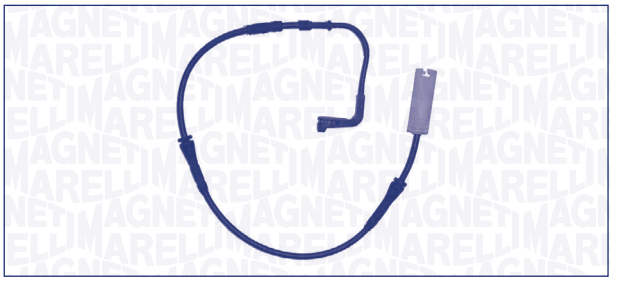

OK049 300 mm

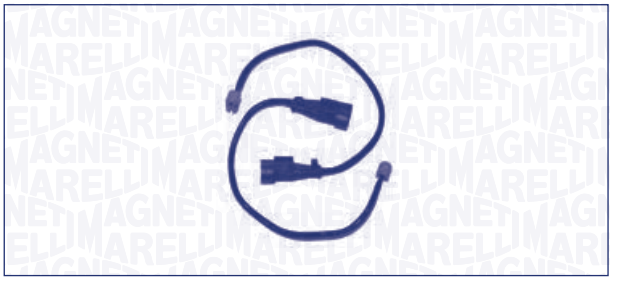

MAGNETI MARELLI

OK050 130 mm

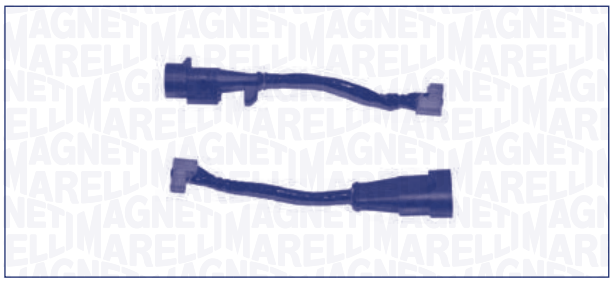

OK051 77,5 mm



OK052 74 mm

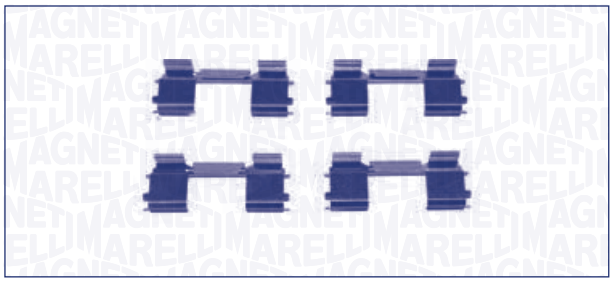

OK053 78 mm

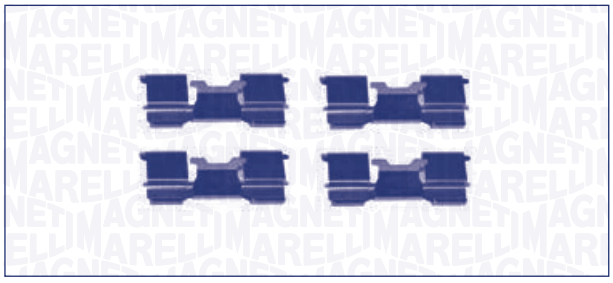

OK054 76,5 mm

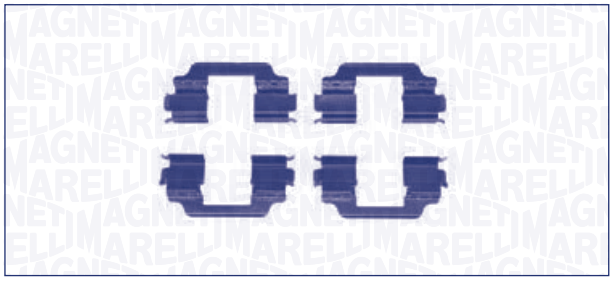

MAGNETI MARELLI

OK055 880 mm

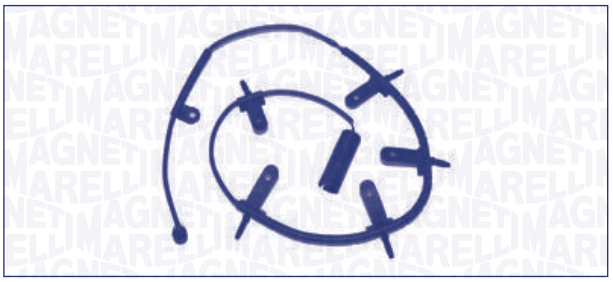

OK056 300 mm

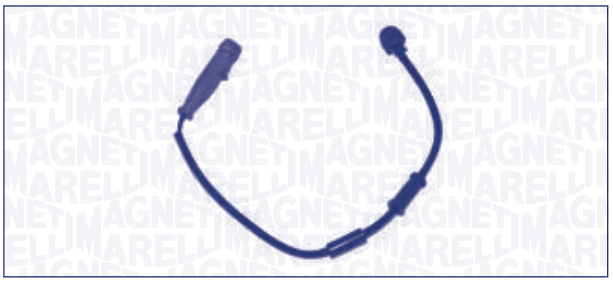

OK057 1130 mm

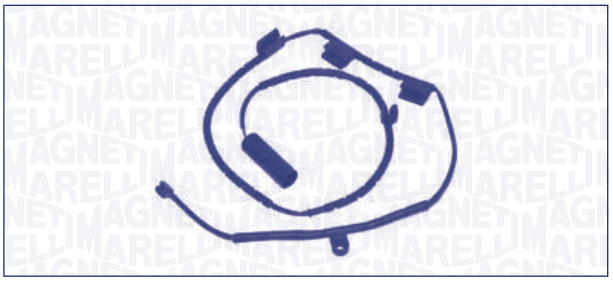

OK058 74,7 mm

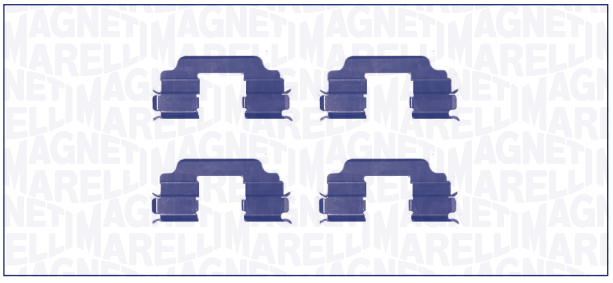

OK059 82,3 mm

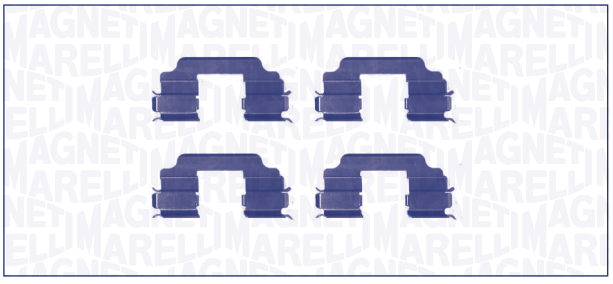

OK060	M8×1,25×90 mm

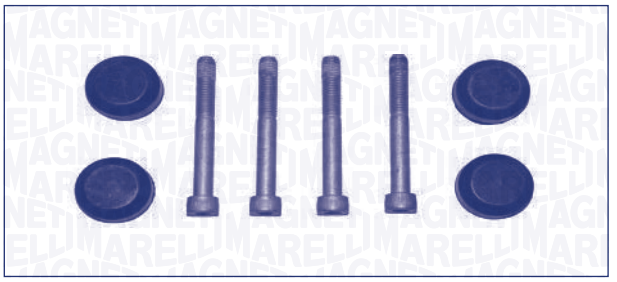

OK061	62 mm

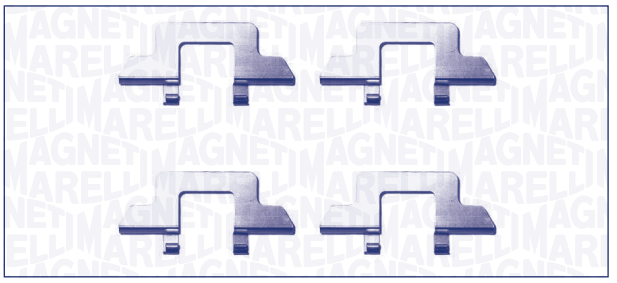

OK062	57,7 mm

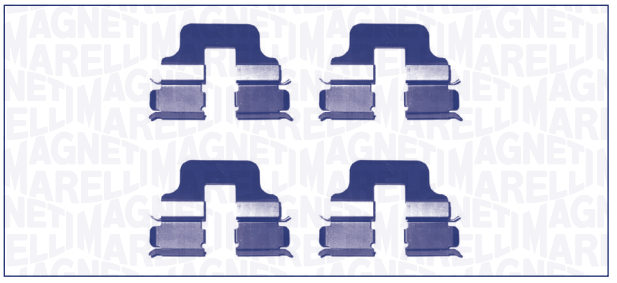

OK063	77 mm

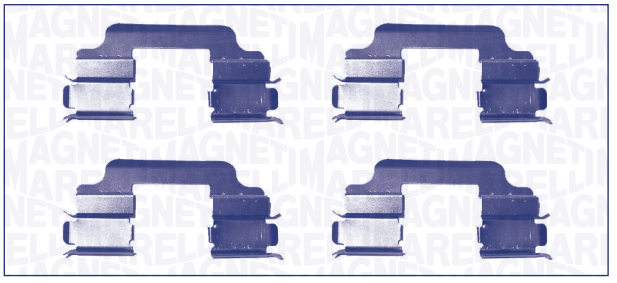

OK064	61,2 mm

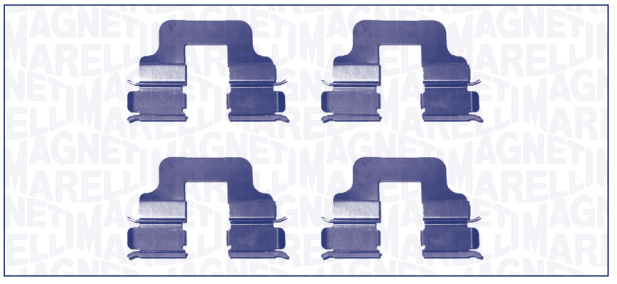

OK065	57,8 mm

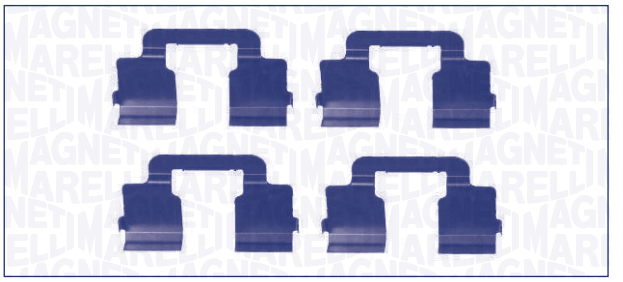

OK066	85,5 mm

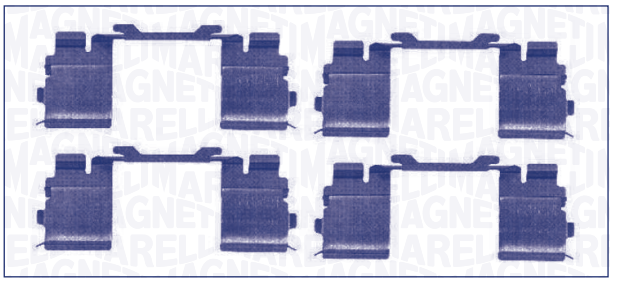

OK067	58 mm

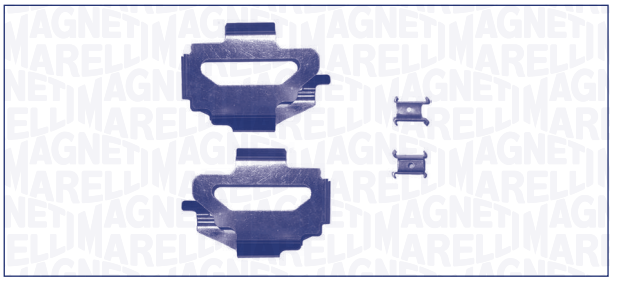

OK068	310/220 mm

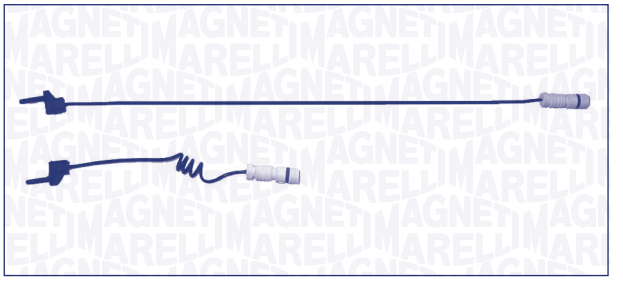

OK069	61,2 mm

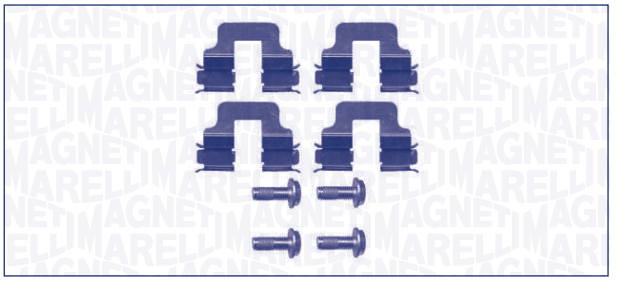

MAGNETI MARELLI

OK070	75,2 mm

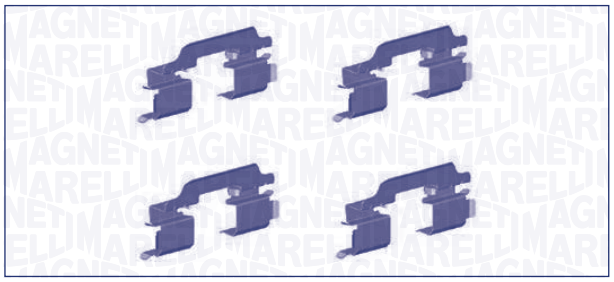

OK071	53 mm

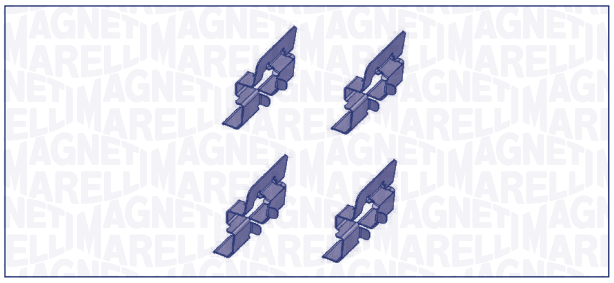

OK072	M10×1,25×38 mm

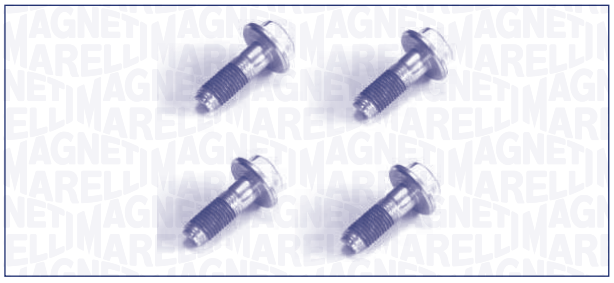

OK073	79 mm

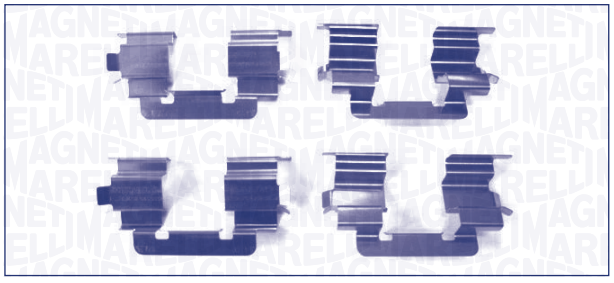

OK074	M8×1,0×42 mm

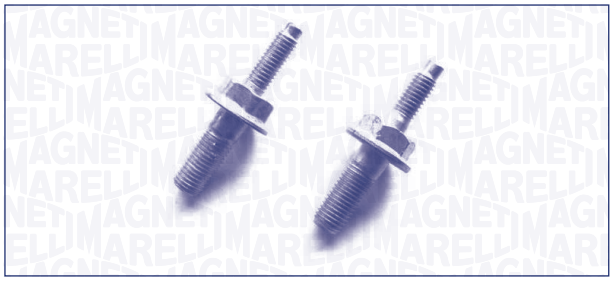

MAGNETI MARELLI

OK075	61,5 mm



OK076	67 mm

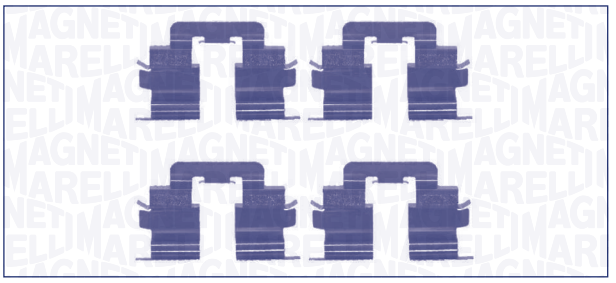

OK077	80 mm

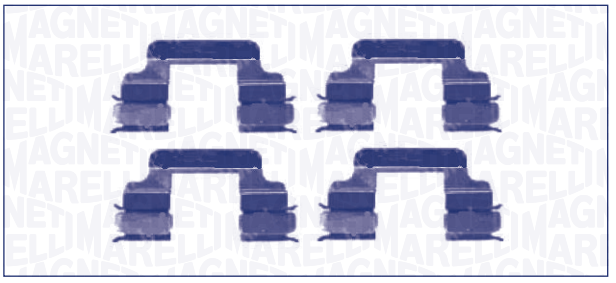

OK078	79,5/M8×1,0 mm

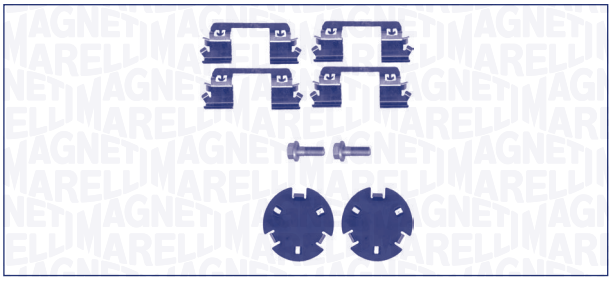

OK079	27 mm

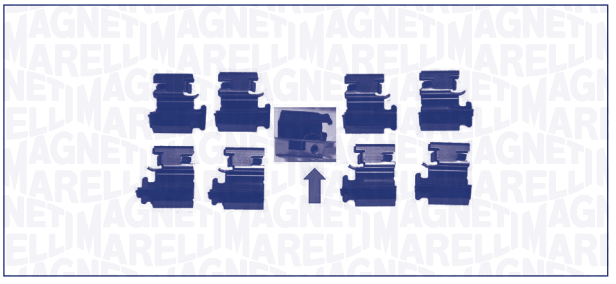

MAGNETI MARELLI

OK080 59 mm

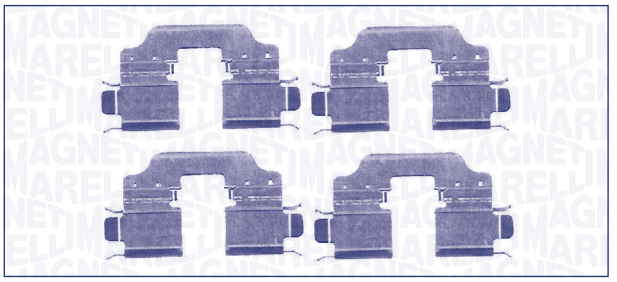

OK081 60 mm

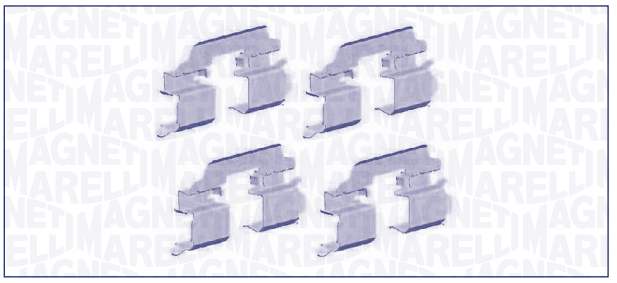

OK082 62 mm

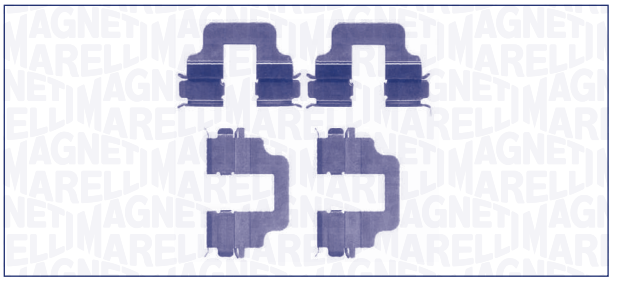

OK083 62/66 mm

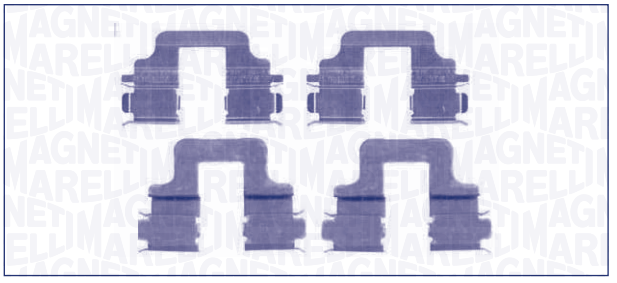

OK084 86,4 mm

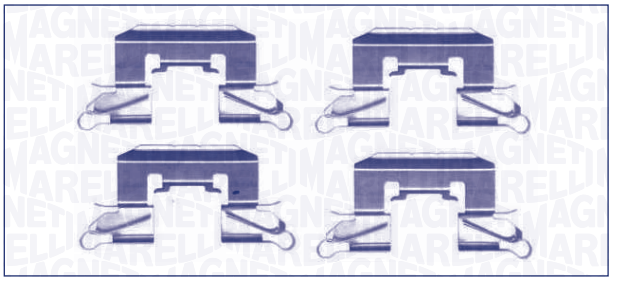

MAGNETI MARELLI

OK085 66 mm

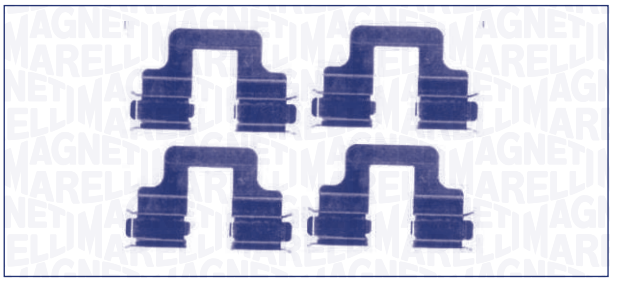

OK086 76,7 mm

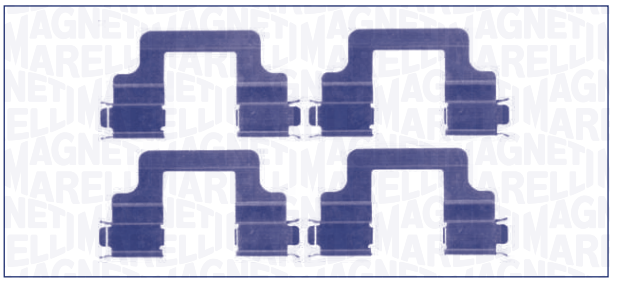

OK087 147 mm

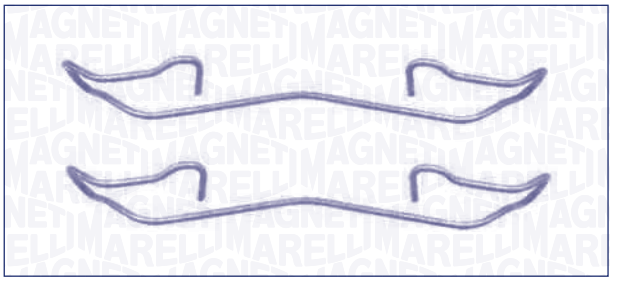

OK088 M8×1,25

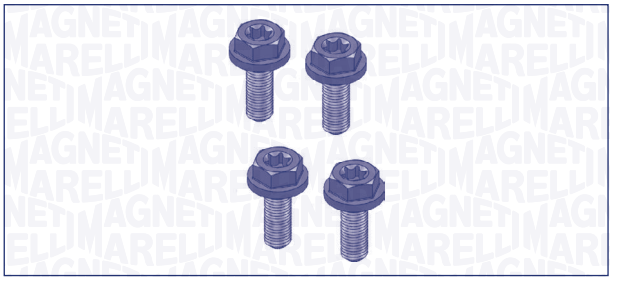

OK089 93,5 mm

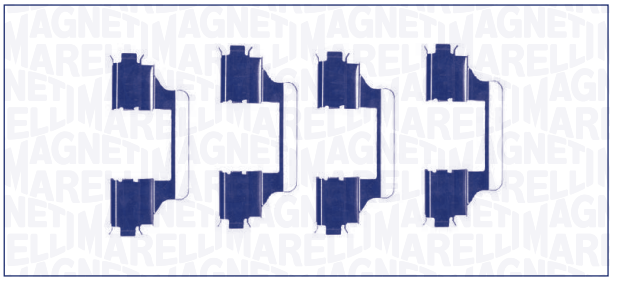

MAGNETI MARELLI

OK090 81,8 mm



OK091 76,3 mm

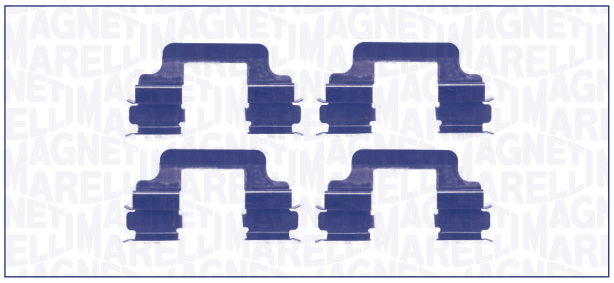

OK092 61,2 mm

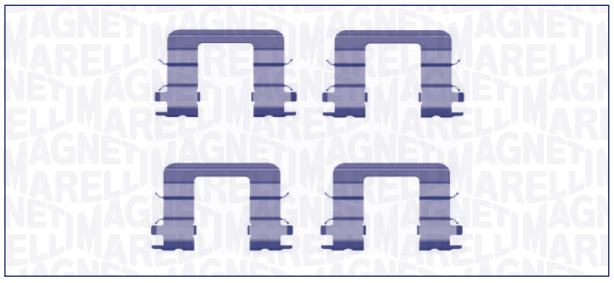

OK093 62,7 mm

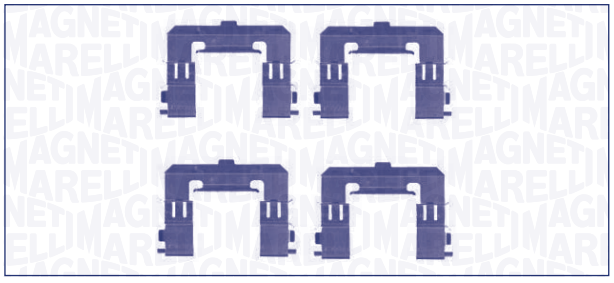

MAGNETI MARELLI

OK094 left/right

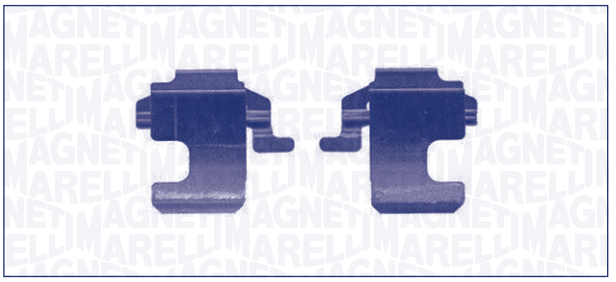

OK095 50 mm

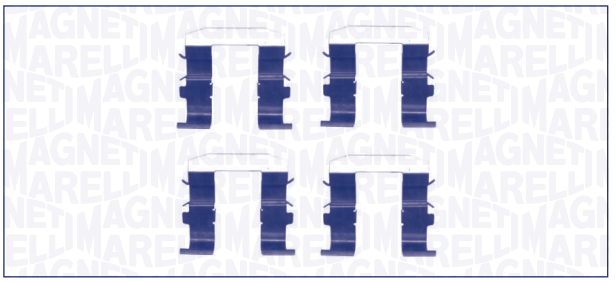

OK096 77 mm

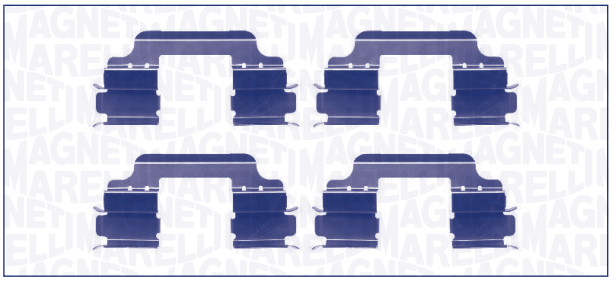

Tavole di comparazione OE
OE cross reference guide
Gegenüberstellung OE
Table de correspondance OE
Tabla de equivalencias OE
Tabela de equivalências OE
Πίνακας αντιστοιχιών OE
Tabela porównawcza OE
Кросс-таблица с OE номерами
OE çapraz referans tablosu

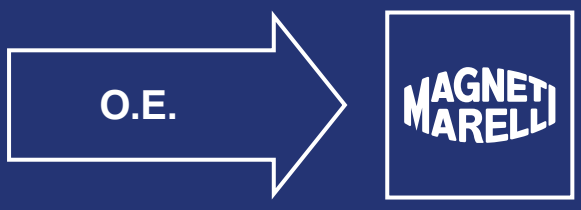

OE	MAGNETI MARELLI
ABARTH	
425408	PF0214
425409	PF0214
1605230	PF0230
1605356	PF0230
5741889	PF0127
9948417	PF0216
9949276	PF0214
9949335	PF0216
51934099	PF0591
71752988	PF0216
71753265	PF0127
71765466	PF0591
77362195	PF0214
77362270	PF0216
77362452	PF0216
77362712	PF0214
77363420	PF0214
77363445	PF0216
77363958	PF0214
77363959	PF0230
77364024	PF0216
77364281	PF0214
77364599	PF0214
77364716	PF0127
77364897	PF0214
77364961	PF0216
77365464	PF0446
77365672	PF0591
77365754	PF0503
77365830	PF0591
77365886	PF0446
77366718	PF0591
93169177	PF0230
93189823	PF0230
ALFA ROMEO	
424833	PF0175
425054	PF0175
425106	PF0175
425407	PF0126
793385	PF0105
794080	PF0783
794089	PF0783
5741889	PF0127
5892481	PF0105

OE	MAGNETI MARELLI
ALFA ROMEO	
5892549	PF0105
5892727	PF0105
5892728	PF0105
5892730	PF0105
5892733	PF0105
5892734	PF0105
5892735	PF0105
5895983	PF0226
7736518	PF0125
9938205	PF0175
9939028	PF0175
9939503	PF0116
9939966	PF0106
9940092	PF0175
9940969	PF0116
9941175	PF0117
9941207	PF0175
9941211	PF0116
9941605	PF0783
9941872	PF0122
9941873	PF0116
9942904	PF0783
9944329	PF0122
9944678	PF0122
9944814	PF0226
9945070	PF0175
9945496	PF0783
9945629	PF0116
9945775	PF0111
9945815	PF0117
9945816	PF0117
9945821	PF0106
9945823	PF0783
9946023	PF0226
9946568	PF0111
9946750	PF0122
9947124	PF0102
9947156	PF0101
9947629	PF0782
9947630	PF0102
9947643	PF0107
9947776	PF0104
9947935	PF0101
9947938	PF0106
9948030	PF0113

OE	MAGNETI MARELLI
ALFA ROMEO	
9948092	PF0118
9948095	PF0101
9948095	PF0101
9948222	PF0102
9948334	PF0101
9948335	PF0112
9948337	PF0112
9948338	PF0109
9948476	PF0103
9948845	PF0103
9948887	PF0108
9949048	PF0102
9949203	PF0114
9949273	PF0126
9949279	PF0563
9949280	PF0125
9949332	PF0109
9949334	PF0109
9949340	PF0126
9950479	PF0783
9950550	PF0122
9950637	PF0104
9950778	PF0101
9950812	PF0107
9950865	PF0106
9951050	PF0113
9951067	PF0102
9951101	PF0118
9951155	PF0113
9951217	PF0103
9951222	PF0109
9951226	PF0112
9951243	PF0102
51934099	PF0591
60743417	PF0117
60743563	PF0117
60760106	PF0117
60760121	PF0226
60765018	PF0119
60776098	PF0119
60777601	PF0783
60777621	PF0122
60778676	PF0119
71712910	PF0111
71713143	PF0101

OE	MAGNETI MARELLI
ALFA ROMEO	
71713144	PF0112
71748391	PF0122
71752983	PF0126
71752984	PF0106
71752987	PF0111
71752994	PF0105
71753039	PF0103
71753042	PF0102
71753265	PF0127
71754146	PF0111
71765055	PF0115
71765466	PF0591
71769094	PF0125
71769141	PF0108
71770954	PF0782
77362087	PF0106
77362090	PF0102
77362093	PF0563
77362186	PF0102
77362193	PF0103
77362194	PF0126
77362202	PF0101
77362222	PF0101
77362225	PF0108
77362226	PF0113
77362228	PF0118
77362229	PF0103
77362231	PF0103
77362242	PF0106
77362251	PF0112
77362254	PF0118
77362257	PF0111
77362273	PF0114
77362275	PF0109
77362276	PF0109
77362300	PF0104
77362316	PF0102
77362327	PF0112
77362343	PF0111
77362354	PF0106
77362548	PF0126
77362683	PF0101
77362692	PF0121
77362722	PF0121
77362768	PF0125

OE	MAGNETI MARELLI
ALFA ROMEO	
77363328	PF0121
77363336	PF0110
77363341	PF0109
77363518	PF0125
77363545	PF0113
77363579	PF0114
77363580	PF0114
77363599	PF0115
77363818	PF0114
77363819	PF0114
77363942	PF0126
77364265	PF0113
77364273	PF0114
77364393	PF0126
77364516	PF0110
77364587	PF0113
77364589	PF0563
77364590	PF0125
77364716	PF0127
77364839	PF0109
77364874	PF0126
77364900	PF0423
77365188	PF0124
77365202	PF0423
77365266	PF0113
77365354	PF0128
77365355	PF0426
77365357	PF0129
77365490	PF0501
77365542	PF0425
77365672	PF0591
77365752	PF0687
77365786	PF0109
77365808	PF0563
77365830	PF0591
77366718	PF0591
77366753	PF0803
95667764	PF0175
68240540AA	PF0803
68243338AA	PF0591
ZF09937786	PF0175
ASTON MARTIN	
0446574020	PF0784

OE	MAGNETI MARELLI
AUDI	
1J0615115	PF0134
1J0693151A	PF0515
1J0698151	PF0134
1J0698151A	PF0134
1J0698151B	PF0134
1J0698151C	PF0135
1J0698151F	PF0516
1J0698151H	PF0134
1J0698151J	PF0134
1J0698151M	PF0136
1K0698151	PF0135
1K0698151C	PF0135
1K0698151E	PF0135
1K0698451	PF0133
1K0698451	PF0601
1K0698451A	PF0444
1K0698451D	PF0601
1K0698451E	PF0133
1K0698451F	PF0601
1K0698451G	PF0133
1K0698451H	PF0601
1K0698451K	PF0601
357698151A	PF0806
357698151D	PF0806
357698151H	PF0806
3A0615151	PF0137
3A0698151	PF0137
3A0698151A	PF0137
3C0698151	PF0135
3C0698151A	PF0135
3C0698151C	PF0135
3C0698451	PF0601
3C0698451A	PF0658
3C0698451C	PF0658
3C0698451E	PF0658
3C0698451F	PF0658
3D0698451	PF0603
3D0698451A	PF0603
4A0698151	PF0130
4A0698151A	PF0130
4A0698151C	PF0130
4B0698151	PF0142
4B0698151AB	PF0142
4B0698151AC	PF0607
4B0698151AD	PF0607

OE	MAGNETI MARELLI
AUDI	
4B0698151AF	PF0143
4B0698151B	PF0143
4B0698151E	PF0142
4B0698151H	PF0143
4B0698151J	PF0142
4B0698151K	PF0143
4B0698151M	PF0142
4B0698151N	PF0142
4B0698151Q	PF0607
4B0698151R	PF0607
4B0698451	PF0131
4B3698451	PF0602
4BO698151K	PF0142
4E0698451A	PF0602
4E4698451A	PF0602
4F0698151	PF0143
4F0698151A	PF0605
4F0698151D	PF0609
4F0698451	PF0602
4F0698451A	PF0601
4F0698451D	PF0601
4F0698451F	PF0602
4F0698451H	PF0602
4G0698151	PF0140
4G0698151D	PF0140
4G0698451	PF0673
4G0698451A	PF0676
4G0698451A	PF0673
4H0698451A	PF0675
4H0698451C	PF0674
4H0698451D	PF0674
533698151A	PF0806
5C0698151A	PF0134
5K0698151	PF0135
5K0698451	PF0441
5K0698451A	PF0441
5N0698151	PF0659
5N0698151A	PF0659
5N0698451	PF0658
5Q0698151B	PF0715
5Q0698151B	PF0716
5Q0698451	PF0713
5Q0698451C	PF0714
6Q0698151	PF0134
6Q0698451	PF0442

OE	MAGNETI MARELLI
AUDI	
6Q0698451B	PF0442
6R0698151A	PF0134
7H0698451A	PF0602
7M0698151	PF0260
7M0698151A	PF0260
7M0698151B	PF0260
7M0698151B	PF0260
7M3698151	PF0261
7N0698151	PF0659
8D0698451A	PF0443
8E0698151	PF0145
8E0698151A	PF0145
8E0698151B	PF0138
8E0698151C	PF0609
8E0698151F	PF0142
8E0698151G	PF0609
8E0698151J	PF0142
8E0698151K	PF0143
8E0698151L	PF0609
8E0698151M	PF0138
8E0698151N	PF0145
8E0698451A	PF0131
8E0698451C	PF0602
8E0698451F	PF0133
8E0698451J	PF0133
8E0698451N	PF0602
8E0698451P	PF0603
8EA698451	PF0444
8J0698151	PF0135
8J0698151A	PF0610
8J0698151C	PF0657
8J0698151F	PF0610
8K0698151	PF0140
8K0698151A	PF0139
8K0698151B	PF0140
8K0698151D	PF0140
8K0698151E	PF0140
8K0698151F	PF0139
8K0698151J	PF0140
8K0698151L	PF0140
8K0698451	PF0141
8K0698451A	PF0141
8K0698451B	PF0141
8K0698451C	PF0141
8K0698451D	PF0141

OE	MAGNETI MARELLI
AUDI	
8N0698151	PF0137
8N0698151	PF0137
8N0698151A	PF0136
8N0698151C	PF0136
8P0698151	PF0610
8R0698151	PF0140
8R0698151A	PF0140
8V0698151	PF0715
8V0698151	PF0716
8V0698151B	PF0715
8V0698151B	PF0716
8V0698151D	PF0715
8V0698151D	PF0716
8V0698451	PF0714
8V0698451A	PF0713
8Z0698151	PF0535
8Z0698151	PF0536
AUTOBIANCHI	
791235	PF0212
791906	PF0212
792538	PF0212
792539	PF0212
792552	PF0212
793322	PF0212
793323	PF0212
793385	PF0105
794080	PF0783
794089	PF0783
5892309	PF0212
5892310	PF0212
5892481	PF0105
5892549	PF0105
5892727	PF0105
5892728	PF0105
5892730	PF0105
5892733	PF0105
5892734	PF0105
5892735	PF0105
5951671	PF0212
9941605	PF0783
9942904	PF0783
9945496	PF0783
9945823	PF0783
9950479	PF0783

OE	MAGNETI MARELLI
AUTOBIANCHI	
60777601	PF0783
71752994	PF0105
BEDFORD	
449187	PF0815
1605496	PF0354
1605544	PF0354
1605586	PF0354
1605670	PF0354
1605795	PF0354
1605870	PF0354
90167765	PF0354
90398758	PF0354
90398759	PF0354
90443902	PF0354
0449187211	PF0815
449187503	PF0815
0449187504	PF0815
0449187511	PF0815
0449187503000	PF0815
BMW	
34111161437	PF0155
34111161445	PF0155
34111163307	PF0579
34111163850	PF0155
34111164330	PF0159
34111164627	PF0159
34111164737	PF0155
34111165555	PF0155
34111165556	PF0155
34111165557	PF0155
34111763089	PF0151
34113404362	PF0153
34113427503	PF0579
34114074370	PF0760
34116750148	PF0153
34116752482	PF0155
34116752731	PF0155
34116753668	PF0151
34116754705	PF0153
34116761243	PF0153
34116761252	PF0579
34116761278	PF0159
34116761279	PF0159

OE	MAGNETI MARELLI
BMW	
34116761280	PF0159
34116761283	PF0151
34116763617	PF0160
34116763618	PF0160
34116764540	PF0151
34116767143	PF0147
34116767144	PF0147
34116767191	PF0151
34116767580	PF0151
34116769099	PF0160
34116769100	PF0156
34116769763	PF0622
34116769951	PF0622
34116771837	PF0147
34116771868	PF0156
34116771972	PF0507
34116772892	PF0147
34116774050	PF0147
34116775310	PF0508
34116775314	PF0582
34116776161	PF0583
34116777772	PF0507
34116778403	PF0760
34116779293	PF0760
34116779652	PF0153
34116780711	PF0150
34116781873	PF0151
34116794056	PF0147
34116794711	PF0150
34116794915	PF0151
34116794916	PF0151
34116794917	PF0581
34116794918	PF0151
34116798190	PF0582
34116799166	PF0156
34116850885	PF0582
34116850886	PF0582
34116852253	PF0760
34116856591	PF0508
34116857096	PF0760
34116858047	PF0508
34119070047	PF0155
34211160340	PF0154
34211160341	PF0154
34211160533	PF0154

OE	MAGNETI MARELLI
BMW	
34211161455	PF0154
34211161456	PF0154
34211164499	PF0157
34211164501	PF0158
34211164501	PF0157
34211164581	PF0485
34211164582	PF0152
34211165233	PF0154
34212227325	PF0485
34213403241	PF0152
34214398213	PF0157
34216750190	PF0157
34216761238	PF0154
34216761239	PF0154
34216761240	PF0152
34216761241	PF0154
34216761248	PF0152
34216761250	PF0152
34216761251	PF0152
34216761281	PF0158
34216761286	PF0737
34216763043	PF0161
34216763044	PF0161
34216767145	PF0148
34216767146	PF0148
34216767150	PF0149
34216768471	PF0738
34216769105	PF0486
34216773161	PF0149
34216774417	PF0148
34216774692	PF0624
34216775342	PF0738
34216775678	PF0486
34216776937	PF0487
34216777240	PF0148
34216778168	PF0157
34216779294	PF0148
34216788183	PF0148
34216790071	PF0152
34216790966	PF0738
34216791938	PF0486

OE	MAGNETI MARELLI
CADILLAC	
1605100	PF0502
1605175	PF0502
13329562	PF0502
13411116	PF0502
22791925	PF0502
CHEVROLET (DAEWOO)	
542039	PF0433
542040	PF0433
542115	PF0424
542120	PF0694
1605169	PF0694
1605176	PF0433
1605178	PF0424
1605180	PF0433
1605180	PF0433
1605180	PF0433
13300867	PF0433
13301207	PF0694
13301234	PF0424
13301234	PF0694
13319293	PF0433
13319294	PF0433
13374966	PF0694
13411380	PF0433
13411383	PF0433
13412272	PF0694
13412810	PF0424
94566892	PF0511
96245178	PF0206
96245178	PF0207
96253367	PF0207
96273708	PF0164
96281937	PF0510
96281945	PF0164
96288629	PF0164
96316582	PF0164
96391891	PF0207
96405129	PF0207
96426043	PF0164
96446176	PF0164
96446176	PF0164
96446176	PF0164
96495227	PF0207
96495227	PF0207

OE	MAGNETI MARELLI
CHEVROLET (DAEWOO)	
96495227	PF0207
96534653	PF0163
S4510004	PF0164
S4510005	PF0207
S4510011	PF0207
S4510017	PF0164
S4510019	PF0510
CHRYSLER	
004200720	PF0315
0024205020	PF0315
0024207420	PF0311
34202720	PF0311
0034202920	PF0315
0034208320	PF0315
0044200320	PF0315
0044200720	PF0315
0044201720	PF0311
044209120	PF0311
77365927	PF0428
77365945	PF0428
77366212	PF0428
77366274	PF0428
77366378	PF0428
05011067AA	PF0785
05114555AA	PF0315
05139218AA	PF0315
4605A261	PF0338
4605A486	PF0338
4605A491	PF0338
4605A557	PF0338
4605A795	PF0338
4605A879	PF0338
68003701AA	PF0211
68028671AA	PF0445
68029263AA	PF0211
68029264AA	PF0211
68029887AA	PF0210
68029887AB	PF0210
68044761AA	PF0210
68044866AA	PF0211
68044866AC	PF0211
68053152AA	PF0211
68068762AA	PF0211
68093323AB	PF0211

OE	MAGNETI MARELLI
CHRYSLER	
68102483AA	PF0428
A0024205020	PF0315
A0024207120	PF0311
K68028671AA	PF0445
MN102618	PF0338
MR527674	PF0338
MR527675	PF0338
MR569403	PF0338
CITROËN	
424833	PF0175
424862	PF0372
424874	PF0372
425017	PF0372
425018	PF0372
425051	PF0372
425054	PF0175
425069	PF0372
425071	PF0197
425072	PF0372
425082	PF0167
425090	PF0165
425097	PF0372
425104	PF0197
425106	PF0175
425108	PF0131
425109	PF0787
425110	PF0787
425111	PF0788
425112	PF0788
425114	PF0198
425116	PF0789
425117	PF0789
425118	PF0184
425119	PF0184
425126	PF0192
425128	PF0166
425128	PF0166
425132	PF0202
425134	PF0196
425137	PF0372
425138	PF0196
425139	PF0196
425142	PF0196
425143	PF0202

OE	MAGNETI MARELLI
CITROËN	
425144	PF0202
425146	PF0197
425147	PF0372
425148	PF0790
425148	PF0197
425150	PF0192
425151	PF0192
425152	PF0537
425154	PF0786
425155	PF0786
425156	PF0198
425160	PF0202
425164	PF0166
425165	PF0168
425165	PF0168
425166	PF0200
425167	PF0196
425169	PF0200
425170	PF0196
425191	PF0200
425196	PF0197
425197	PF0197
425203	PF0537
425204	PF0200
425205	PF0200
425206	PF0202
425207	PF0498
425209	PF0201
425212	PF0201
425213	PF0199
425214	PF0565
425215	PF0181
425216	PF0564
425217	PF0180
425218	PF0170
425220	PF0182
425221	PF0170
425222	PF0176
425223	PF0131
425224	PF0183
425225	PF0185
425226	PF0183
425227	PF0185
425228	PF0201
425229	PF0537

OE	MAGNETI MARELLI
CITROËN	
425231	PF0182
425232	PF0131
425233	PF0131
425234	PF0199
425235	PF0176
425236	PF0173
425237	PF0587
425238	PF0174
425239	PF0170
425240	PF0170
425241	PF0131
425242	PF0186
425243	PF0186
425244	PF0187
425245	PF0187
425246	PF0188
425247	PF0188
425248	PF0181
425249	PF0564
425252	PF0176
425254	PF0498
425258	PF0173
425259	PF0170
425260	PF0178
425263	PF0168
425274	PF0790
425276	PF0174
425278	PF0615
425279	PF0616
425287	PF0565
425288	PF0181
425289	PF0564
425290	PF0180
425291	PF0198
425294	PF0615
425302	PF0201
425305	PF0201
425320	PF0201
425322	PF0179
425323	PF0178
425325	PF0179
425326	PF0616
425327	PF0172
425328	PF0172
425330	PF0170

OE	MAGNETI MARELLI
CITROËN	
425331	PF0176
425333	PF0199
425334	PF0180
425336	PF0615
425337	PF0615
425338	PF0174
425339	PF0176
425340	PF0179
425341	PF0170
425342	PF0174
425344	PF0178
425345	PF0173
425346	PF0181
425348	PF0615
425355	PF0189
425356	PF0189
425357	PF0189
425358	PF0189
425359	PF0191
425360	PF0191
425361	PF0169
425362	PF0644
425363	PF0193
425364	PF0193
425365	PF0193
425366	PF0193
425367	PF0194
425368	PF0194
425369	PF0173
425370	PF0176
425371	PF0177
425372	PF0587
425373	PF0190
425374	PF0190
425375	PF0190
425376	PF0190
425378	PF0199
425383	PF0615
425384	PF0173
425388	PF0496
425391	PF0340
425397	PF0644
425401	PF0179
425403	PF0667
425404	PF0616

OE	MAGNETI MARELLI
CITROËN	
425405	**PF0243**
425407	**PF0126**
425410	**PF0615**
425411	**PF0615**
425412	**PF0169**
425413	**PF0169**
425414	**PF0171**
425415	**PF0171**
425418	**PF0176**
425419	**PF0179**
425421	**PF0616**
425424	**PF0668**
425425	**PF0169**
425429	**PF0171**
425431	**PF0697**
425432	**PF0177**
425433	**PF0171**
425435	**PF0754**
425440	**PF0179**
425442	**PF0790**
425444	**PF0754**
425446	**PF0754**
425448	**PF0340**
425448	**PF0340**
425451	**PF0789**
425452	**PF0184**
425453	**PF0787**
425454	**PF0192**
425455	**PF0183**
425456	**PF0185**
425457	**PF0182**
425458	**PF0186**
425459	**PF0187**
425461	**PF0189**
425462	**PF0189**
425463	**PF0190**
425464	**PF0190**
425466	**PF0788**
425468	**PF0188**
425469	**PF0191**
425471	**PF0176**
425474	**PF0172**
425475	**PF0170**
425476	**PF0179**
425477	**PF0644**

OE	MAGNETI MARELLI
CITROËN	
425478	**PF0615**
425480	**PF0615**
425482	**PF0196**
425485	**PF0786**
425486	**PF0174**
425487	**PF0201**
425488	**PF0178**
425489	**PF0176**
425491	**PF0616**
425492	**PF0176**
425493	**PF0166**
425494	**PF0201**
425497	**PF0194**
425498	**PF0168**
525251	**PF0192**
795915	**PF0192**
1001096	**PF0131**
1027650	**PF0131**
1360304	**PF0243**
1763677	**PF0243**
95619550	**PF0165**
95646300	**PF0165**
95647733	**PF0167**
95650935	**PF0165**
95650936	**PF0165**
95650937	**PF0165**
95650938	**PF0165**
95658617	**PF0165**
95659340	**PF0168**
95659341	**PF0197**
95659353	**PF0167**
95666970	**PF0168**
95666971	**PF0197**
95667764	**PF0175**
95667786	**PF0198**
1607083180	**PF0697**
1607083280	**PF0432**
1608520480	**PF0171**
1608520680	**PF0754**
1608681680	**PF0754**
1609899680	**PF0678**
1610489680	**PF0174**
1611293980	**PF0170**
1612433780	**PF0643**
6025371650	**PF0432**

OE	MAGNETI MARELLI
CITROËN	
9404251518	**PF0192**
9404252328	**PF0131**
044650H020	**PF0172**
4254A9	**PF0753**
4254C0	**PF0169**
4254C5	**PF0432**
4254C6	**PF0555**
4254C8	**PF0560**
440600002R	**PF0243**
440601689R	**PF0243**
44650H020	**PF0172**
4605A261	**PF0338**
4605A447	**PF0340**
4605A448	**PF0340**
4605A486	**PF0338**
4605A491	**PF0338**
4605A557	**PF0338**
4605A795	**PF0338**
4605A879	**PF0338**
4605A998	**PF0678**
4605B070	**PF0678**
4605B071	**PF0678**
4B0698451	**PF0131**
6KL698151	**PF0555**
8E0698451A	**PF0131**
C2C27271	**PF0243**
C2P17595	**PF0243**
E172039	**PF0787**
E172232	**PF0182**
E172285	**PF0173**
E172592	**PF0182**
GHY92648Z	**PF0678**
K68028671AA	**PF0340**
MN102618	**PF0338**
MR389549	**PF0496**
MR527674	**PF0338**
MR527675	**PF0338**
MR569403	**PF0338**
MXD2750AA	**PF0555**
MZ690346	**PF0340**
ZF09937786	**PF0175**

OE	MAGNETI MARELLI
DACIA	
4154210510	PF0347
6001549803	PF0545
7701201669	PF0203
7701201773	PF0203
7701202289	PF0203
7701202516	PF0203
7701202540	PF0203
7701202894	PF0203
7701203775	PF0203
7701208422	PF0347
7711130036	PF0203
7711130071	PF0203
410604076R	PF0347
410605961R	PF0429
410607115R	PF0429
410608481R	PF0347
410609646R	PF0718
41060AX601	PF0347
41060AX625	PF0347
440603905R	PF0429
A4154210510	PF0347
D1060AX60A	PF0347
D1060AX60F	PF0347
D1060AX61A	PF0347
DAEWOO	
94566892	PF0511
96245178	PF0206
96245178	PF0207
96253367	PF0207
96273708	PF0164
96281937	PF0510
96281945	PF0164
96288629	PF0164
96316582	PF0164
96391891	PF0207
96405129	PF0207
96426043	PF0164
96446175	PF0164
96446176	PF0164
96495227	PF0207
96534653	PF0163
S4510004	PF0164
S4510005	PF0207
S4510011	PF0207

OE	MAGNETI MARELLI
DAEWOO	
S4510017	PF0164
S4510019	PF0510
DAIHATSU	
449187	PF0815
1550219	PF0254
1676630	PF0254
1719275	PF0254
1749322	PF0254
1788734	PF0254
1788734	PF0254
0449187211	PF0815
449187401	PF0333
449187503	PF0815
0449187504	PF0815
0449187511	PF0815
449197201	PF0209
449197214	PF0791
449187401000	PF0333
0449187503000	PF0815
449197000000	PF0209
449197201000	PF0209
449197205000	PF0209
449197401000	PF0209
04465B1010	PF0471
04465B1020	PF0471
04465B1050	PF0471
04465B1110	PF0471
04465B1320	PF0254
04465B1380	PF0471
04465B2030	PF0791
04465B2040	PF0791
04465B4040	PF0333
0465B1120	PF0254
0465B1190	PF0254
410604A00B	PF0471
4605B281	PF0791
5581068L00	PF0684
55810M79F10	PF0471
8V512K021BA	PF0254
DFY13328Z	PF0684
DFY13328ZA	PF0684
MB699464	PF0333
MB699473	PF0333
MB928816	PF0333

OE	MAGNETI MARELLI
DAIHATSU	
MB928817	PF0333
MB950555	PF0333
MR389508	PF0333
PW891172	PF0333
DODGE	
449187401	PF0333
04465B4040	PF0333
05011067AA	PF0785
425391	PF0340
425448	PF0340
425448	PF0340
449187401000	PF0333
4605A261	PF0338
4605A336	PF0285
4605A337	PF0285
4605A447	PF0340
4605A448	PF0340
4605A479	PF0285
4605A486	PF0338
4605A491	PF0338
4605A493	PF0285
4605A557	PF0338
4605A558	PF0285
4605A795	PF0338
4605A879	PF0338
5191271AA	PF0285
5191271AB	PF0285
5191271AC	PF0285
68003701AA	PF0211
68029263AA	PF0211
68029264AA	PF0211
68029887AA	PF0210
68029887AB	PF0210
68044761AA	PF0210
68044866AA	PF0211
68044866AC	PF0211
68053152AA	PF0211
68068762AA	PF0211
68093323AB	PF0211
K68028671AA	PF0340
MB699464	PF0333
MB699473	PF0333
MB928816	PF0333
MB928817	PF0333

OE	MAGNETI MARELLI
DODGE	
MB950555	PF0333
MN102618	PF0338
MN116929	PF0285
MR389508	PF0333
MR527674	PF0338
MR527675	PF0338
MR569403	PF0338
MR955068	PF0285
MZ690346	PF0340
PW891172	PF0333
DR	
0446642010	PF0578
0446642020	PF0578
0446642030	PF0578
0446642040	PF0578
0446642050	PF0578
5581075F10	PF0534
T113501080	PF0599
T11BJ3501080	PF0578
FERRARI	
PF0107	9950812
PF0107	9947643
FIAT	
424833	PF0175
425054	PF0175
425106	PF0175
425108	PF0131
425109	PF0787
425110	PF0787
425111	PF0788
425112	PF0788
425116	PF0789
425117	PF0789
425118	PF0184
425119	PF0184
425126	PF0192
425150	PF0192
425151	PF0192
425220	PF0182
425223	PF0131
425224	PF0183
425225	PF0185

OE	MAGNETI MARELLI
FIAT	
425226	PF0183
425227	PF0185
425231	PF0182
425232	PF0131
425233	PF0131
425241	PF0131
425242	PF0186
425243	PF0186
425244	PF0187
425245	PF0187
425246	PF0188
425247	PF0188
425255	PF0500
425355	PF0189
425356	PF0189
425357	PF0189
425358	PF0189
425359	PF0191
425360	PF0191
425363	PF0193
425364	PF0193
425365	PF0193
425366	PF0193
425367	PF0194
425368	PF0194
425373	PF0190
425374	PF0190
425375	PF0190
425376	PF0190
425407	PF0126
425408	PF0214
425409	PF0214
425451	PF0789
425452	PF0184
425453	PF0787
425454	PF0192
425455	PF0183
425456	PF0185
425457	PF0182
425458	PF0186
425459	PF0187
425460	PF0500
425461	PF0189
425462	PF0189
425463	PF0190

OE	MAGNETI MARELLI
FIAT	
425464	PF0190
425466	PF0788
425468	PF0188
425469	PF0191
425497	PF0194
525251	PF0192
791235	PF0212
791906	PF0212
792538	PF0212
792539	PF0212
792552	PF0212
792589	PF0237
793322	PF0212
793323	PF0212
793325	PF0237
793385	PF0105
794080	PF0783
794089	PF0783
795915	PF0192
1001096	PF0131
1027650	PF0131
1559697	PF0215
1559698	PF0454
1605139	PF0588
1605164	PF0288
1605230	PF0230
1605356	PF0230
1669578	PF0454
1675620	PF0454
1731172	PF0453
1778385	PF0453
5741889	PF0127
5882984	PF0807
5888528	PF0807
5892309	PF0212
5892310	PF0212
5892481	PF0105
5892549	PF0105
5892727	PF0105
5892728	PF0105
5892730	PF0105
5892733	PF0105
5892734	PF0105
5892735	PF0105
5892736	PF0218

OE	MAGNETI MARELLI
FIAT	
5892737	PF0219
5892786	PF0223
5894112	PF0229
5951671	PF0212
7076375	PF0807
7076376	PF0807
7078947	PF0235
7078947	PF0235
7083789	PF0807
7736518	PF0125
9938205	PF0175
9939028	PF0175
9939503	PF0116
9939966	PF0106
9940092	PF0175
9940969	PF0116
9941207	PF0175
9941211	PF0116
9941605	PF0783
9941872	PF0122
9941873	PF0116
9942904	PF0783
9944329	PF0122
9944678	PF0122
9945045	PF0219
9945070	PF0175
9945496	PF0783
9945629	PF0116
9945788	PF0789
9945810	PF0184
9945821	PF0106
9945823	PF0783
9946016	PF0787
9946750	PF0122
9947118	PF0222
9947124	PF0102
9947156	PF0101
9947468	PF0219
9947629	PF0782
9947629	PF0222
9947630	PF0102
9947776	PF0104
9947834	PF0239
9947917	PF0235
9947934	PF0239

OE	MAGNETI MARELLI
FIAT	
9947935	PF0101
9947938	PF0106
9947954	PF0232
9947996	PF0234
9948045	PF0219
9948054	PF0219
9948095	PF0101
9948095	PF0101
9948131	PF0233
9948222	PF0102
9948334	PF0101
9948338	PF0109
9948408	PF0240
9948410	PF0240
9948417	PF0216
9948476	PF0103
9948623	PF0238
9948623	PF0238
9948626	PF0183
9948629	PF0185
9948845	PF0103
9948870	PF0227
9949048	PF0102
9949125	PF0233
9949273	PF0126
9949276	PF0214
9949279	PF0563
9949280	PF0125
9949332	PF0109
9949334	PF0109
9949335	PF0216
9949340	PF0126
9949407	PF0188
9949482	PF0187
9949516	PF0186
9949517	PF0187
9949552	PF0182
9949556	PF0558
9950479	PF0783
9950550	PF0122
9950637	PF0104
9950778	PF0101
9950865	PF0106
9951067	PF0102
9951217	PF0103

OE	MAGNETI MARELLI
FIAT	
9951222	PF0109
9951243	PF0102
46565733	PF0223
51934099	PF0591
60777601	PF0783
60777621	PF0122
71711135	PF0192
71713143	PF0101
71737178	PF0218
71738134	PF0223
71738151	PF0232
71738152	PF0233
71738153	PF0807
71738154	PF0229
71738155	PF0235
71738156	PF0234
71742853	PF0241
71748384	PF0237
71748391	PF0122
71750033	PF0241
71750931	PF0464
71752978	PF0187
71752979	PF0186
71752980	PF0789
71752981	PF0239
71752982	PF0240
71752983	PF0126
71752984	PF0106
71752985	PF0188
71752986	PF0238
71752988	PF0216
71752989	PF0222
71752992	PF0787
71752993	PF0185
71752994	PF0105
71753039	PF0103
71753040	PF0185
71753042	PF0102
71753265	PF0127
71765466	PF0591
71767140	PF0238
71769053	PF0788
71769094	PF0125
71770028	PF0191
71770070	PF0187

OE	MAGNETI MARELLI
FIAT	
71770074	PF0186
71770953	PF0222
71770954	PF0782
71770965	PF0228
71770974	PF0787
71770983	PF0237
71772213	PF0182
71773147	PF0241
77362084	PF0222
77362087	PF0106
77362090	PF0102
77362093	PF0563
77362149	PF0238
77362170	PF0240
77362177	PF0233
77362178	PF0232
77362179	PF0558
77362180	PF0233
77362185	PF0219
77362186	PF0102
77362190	PF0239
77362193	PF0103
77362194	PF0126
77362195	PF0214
77362199	PF0222
77362202	PF0101
77362205	PF0227
77362209	PF0184
77362212	PF0789
77362216	PF0187
77362219	PF0186
77362222	PF0101
77362229	PF0103
77362231	PF0103
77362233	PF0185
77362235	PF0183
77362236	PF0182
77362237	PF0787
77362238	PF0192
77362242	PF0106
77362245	PF0219
77362248	PF0219
77362267	PF0219
77362269	PF0238
77362270	PF0216

OE	MAGNETI MARELLI
FIAT	
77362274	PF0188
77362275	PF0109
77362276	PF0109
77362300	PF0104
77362310	PF0234
77362311	PF0235
77362315	PF0229
77362316	PF0102
77362351	PF0222
77362354	PF0106
77362452	PF0216
77362479	PF0219
77362548	PF0126
77362683	PF0101
77362689	PF0236
77362691	PF0236
77362712	PF0214
77362743	PF0228
77362768	PF0125
77363035	PF0558
77363321	PF0238
77363321	PF0238
77363341	PF0109
77363420	PF0214
77363445	PF0216
77363496	PF0227
77363518	PF0125
77363601	PF0225
77363607	PF0225
77363610	PF0225
77363627	PF0224
77363782	PF0693
77363942	PF0126
77363956	PF0182
77363958	PF0214
77363959	PF0230
77363974	PF0123
77363992	PF0558
77364014	PF0189
77364015	PF0190
77364016	PF0191
77364024	PF0216
77364160	PF0189
77364161	PF0190
77364168	PF0225

OE	MAGNETI MARELLI
FIAT	
77364169	PF0225
77364224	PF0588
77364281	PF0214
77364318	PF0190
77364319	PF0190
77364393	PF0126
77364394	PF0123
77364447	PF0182
77364477	PF0123
77364511	PF0193
77364512	PF0193
77364513	PF0194
77364589	PF0563
77364590	PF0125
77364599	PF0214
77364635	PF0454
77364636	PF0215
77364637	PF0430
77364716	PF0127
77364798	PF0430
77364839	PF0109
77364859	PF0187
77364862	PF0186
77364874	PF0126
77364893	PF0558
77364897	PF0214
77364919	PF0558
77364929	PF0288
77364961	PF0216
77365026	PF0221
77365113	PF0228
77365188	PF0124
77365191	PF0454
77365306	PF0455
77365311	PF0288
77365337	PF0456
77365396	PF0288
77365464	PF0446
77365468	PF0221
77365543	PF0560
77365651	PF0430
77365672	PF0591
77365716	PF0221
77365729	PF0427
77365786	PF0109

OE	MAGNETI MARELLI
FIAT	
77365808	PF0563
77365809	PF0568
77365810	PF0221
77365811	PF0427
77365816	PF0453
77365830	PF0591
77365865	PF0562
77365865	PF0221
77365886	PF0446
77365927	PF0428
77365945	PF0428
77366017	PF0642
77366018	PF0642
77366019	PF0642
77366021	PF0643
77366022	PF0643
77366023	PF0643
77366024	PF0643
77366134	PF0560
77366212	PF0428
77366270	PF0440
77366274	PF0428
77366378	PF0428
77366388	PF0689
77366456	PF0688
77366457	PF0688
77366481	PF0562
77366534	PF0562
77366537	PF0440
77366538	PF0427
77366602	PF0560
77366718	PF0591
77367090	PF0643
77367091	PF0642
77367092	PF0642
77367145	PF0794
77367213	PF0792
77367214	PF0793
77367369	PF0792
77694859	PF0188
93169177	PF0230
93189823	PF0230
95511378	PF0288
95515028	PF0288
95667764	PF0175

OE	MAGNETI MARELLI
FIAT	
98845078	PF0558
98845340	PF0693
1612433780	PF0643
9404251248	PF0242
9404251518	PF0192
9404252328	PF0131
9404252548	PF0500
9467548887	PF0193
9467548887	PF0193
9467548987	PF0193
9467548987	PF0193
9467549087	PF0194
68003701AA	PF0211
68029263AA	PF0211
68029264AA	PF0211
68029887AA	PF0210
68029887AB	PF0210
68044761AA	PF0210
68044866AA	PF0211
68044866AC	PF0211
68053152AA	PF0211
68068762AA	PF0211
68088919AA	PF0689
68093323AB	PF0211
68102483AA	PF0428
68243338AA	PF0591
FORD	
425108	PF0131
425223	PF0131
425232	PF0131
425233	PF0131
425241	PF0131
1001095	PF0260
1001096	PF0131
1010503	PF0248
1013843	PF0250
1027650	PF0131
1027703	PF0260
1030602	PF0246
1030602	PF0248
1031781	PF0247
1031843	PF0260
1042687	PF0250
1042688	PF0248

OE	MAGNETI MARELLI
FORD	
1048308	PF0247
1048308	PF0246
1048309	PF0247
1048310	PF0247
1064762	PF0250
1064763	PF0248
1073731	PF0245
1074971	PF0268
1075558	PF0255
1075565	PF0253
1075565	PF0253
1079347	PF0245
1079919	PF0250
1079920	PF0248
1090276	PF0250
1095201	PF0245
1096942	PF0245
1101462	PF0252
1101464	PF0252
1107697	PF0255
1107698	PF0253
1111857	PF0251
1121892	PF0265
1121894	PF0266
1121894	PF0550
1121895	PF0265
1126718	PF0266
1126718	PF0550
1128463	PF0252
1130120	PF0265
1130715	PF0251
1130751	PF0247
1133447	PF0259
1133448	PF0258
1133750	PF0247
1134158	PF0268
1134159	PF0270
1135167	PF0556
1136519	PF0255
1144288	PF0556
1151049	PF0255
1151377	PF0262
1152316	PF0265
1201124	PF0262
1204843	PF0266

OE	MAGNETI MARELLI
FORD	
1204843	PF0550
1204845	PF0265
1206062	PF0251
1206064	PF0252
1207104	PF0265
1207519	PF0259
1219892	PF0265
1219894	PF0265
1219897	PF0265
1223682	PF0244
1233679	PF0569
1236880	PF0252
1250688	PF0266
1250688	PF0550
1301589	PF0268
1301592	PF0270
1318139	PF0556
1318147	PF0271
1321517	PF0244
1324300	PF0569
1343513	PF0259
1345339	PF0258
1356392	PF0267
1356600	PF0439
1360254	PF0431
1360290	PF0439
1360303	PF0256
1360306	PF0431
1368558	PF0608
1371402	PF0272
1371403	PF0648
1371454	PF0273
1379971	PF0263
1405511	PF0797
1415166	PF0556
1423389	PF0797
1425406	PF0255
1425407	PF0253
1426143	PF0264
1426144	PF0264
1431178	PF0797
1433952	PF0272
1433954	PF0648
1433958	PF0273
1436498	PF0263

OE	MAGNETI MARELLI
FORD	
1437761	PF0263
1439866	PF0264
1458247	PF0263
1459408	PF0257
1459450	PF0264
1464435	PF0608
1465126	PF0250
1465166	PF0556
1465167	PF0556
1465168	PF0271
1477803	PF0257
1488962	PF0272
1501265	PF0474
1503969	PF0264
1519528	PF0244
1521326	PF0245
1521328	PF0252
1521531	PF0266
1521531	PF0550
1522062	PF0266
1522062	PF0550
1522073	PF0267
1530602	PF0273
1550219	PF0254
1553797	PF0272
1554523	PF0648
1554524	PF0273
1559697	PF0215
1559698	PF0454
1560014	PF0272
1560014	PF0272
1560023	PF0648
1560026	PF0273
1566232	PF0263
1566234	PF0257
1605973	PF0349
1647730	PF0249
1652285	PF0245
1669578	PF0454
1675620	PF0454
1676630	PF0254
1682005	PF0257
1682498	PF0255
1719275	PF0254
1721086	PF0648

OE	MAGNETI MARELLI
FORD	
1721087	PF0272
1731172	PF0453
1749322	PF0254
1756395	PF0257
1763301	PF0255
1763678	PF0256
1763915	PF0741
1763916	PF0740
1775091	PF0743
1778385	PF0453
1783839	PF0252
1785193	PF0712
1788734	PF0254
1788734	PF0254
1797211	PF0604
1809259	PF0796
1809458	PF0796
1819638	PF0273
1842632	PF0741
1956495	PF0352
1957042	PF0352
4077636	PF0556
4095132	PF0271
4114749	PF0271
4346371	PF0256
4387361	PF0256
4427737	PF0256
4432201	PF0439
4432234	PF0439
5018899	PF0248
5020817	PF0249
5023998	PF0249
5023998	PF0249
5023998	PF0249
5025948	PF0246
5026661	PF0247
5027604	PF0247
5028763	PF0269
5029147	PF0245
6180371	PF0246
6197738	PF0269
6197739	PF0270
6500951	PF0249
6500952	PF0246
6500953	PF0246

OE	MAGNETI MARELLI
FORD	
6500954	**PF0246**
6704269	**PF0249**
6704271	**PF0246**
6877836	**PF0245**
6877836	**PF0245**
6882584	**PF0245**
6965579	**PF0269**
7018202	**PF0269**
7075050	**PF0246**
12799240	**PF0349**
30671574	**PF0264**
30683274	**PF0608**
30683554	**PF0244**
30714791	**PF0608**
30736322	**PF0797**
30736610	**PF0431**
30742029	**PF0608**
30742030	**PF0244**
30742031	**PF0244**
30742491	**PF0264**
30742516	**PF0264**
30793107	**PF0263**
30793539	**PF0797**
30793540	**PF0257**
30793540	**PF0263**
30793857	**PF0797**
30793941	**PF0263**
30793941	**PF0263**
30794553	**PF0257**
30794554	**PF0264**
30794555	**PF0264**
31200229	**PF0797**
77364635	**PF0454**
77364636	**PF0215**
77365191	**PF0454**
77365816	**PF0453**
93176116	**PF0431**
93183140	**PF0431**
93188031	**PF0608**
93190338	**PF0431**
93195754	**PF0608**
7701206609	**PF0349**
7701207968	**PF0349**
9404252328	**PF0131**
04465B1320	**PF0254**

OE	MAGNETI MARELLI
FORD	
0465B1120	**PF0254**
0465B1190	**PF0254**
1439867	**PF0257**
1E033323Z	**PF0250**
1E063323Z	**PF0248**
1E063323ZA	**PF0248**
1E103323Z	**PF0252**
1E123323Z	**PF0251**
1M2J2K021AA	**PF0262**
1M2JK021BA	**PF0540**
1S712K021AB	**PF0266**
1S712K021AB	**PF0550**
2M342001CA	**PF0439**
2M5V2K021AA	**PF0256**
2M5Z2001AB	**PF0256**
2T142K021AC	**PF0256**
2T1J2K021AA	**PF0256**
2T1J2M008AA	**PF0349**
2T1Z2001A	**PF0256**
3M512M008AC	**PF0431**
3M5J2K021AA	**PF0244**
3M5J2M008AA	**PF0431**
410600F025	**PF0352**
410602X825	**PF0352**
410602X825	**PF0352**
410609C125	**PF0352**
410609C525	**PF0352**
410609C526	**PF0352**
44060AV625	**PF0349**
44060AV725	**PF0349**
4B0698451	**PF0131**
6C112K021AB	**PF0272**
6C112K021AD	**PF0272**
6C112K021BC	**PF0648**
6C112M008AB	**PF0273**
6C112M008AC	**PF0273**
6C112M008AD	**PF0273**
6G912M008GC	**PF0257**
6G91ZK021A2A	**PF0263**
7D0698451F	**PF0258**
7D0698451G	**PF0258**
7D069845B	**PF0258**
7M0698151	**PF0260**
7M0698151A	**PF0260**
7M0698151B	**PF0260**

OE	MAGNETI MARELLI
FORD	
7M0698151B	**PF0260**
7M3698151B	**PF0262**
7M3698451	**PF0259**
7M3698451B	**PF0259**
7M3698451C	**PF0259**
7M3698451D	**PF0258**
7M3698451E	**PF0259**
7M3698451F	**PF0258**
8C1V2MM008AA	**PF0474**
8E0698451A	**PF0131**
8V512K021BA	**PF0254**
91AB2K021JA	**PF0246**
93VX2K021AB	**PF0268**
95VW2K021AA	**PF0260**
96FB2K021AA	**PF0250**
97FB2K021BA	**PF0248**
97FU2K021CA	**PF0250**
98AB2K021AD	**PF0255**
98AB2M008BA	**PF0253**
98AX2K021AF	**PF0255**
98AX2K021AG	**PF0255**
98AX2M008BA	**PF0253**
98FB2K021AA	**PF0250**
9C112K021AA	**PF0272**
9C112K021BA	**PF0648**
9S512K021A	**PF0215**
9S512K021BC	**PF0454**
AV612M008AB	**PF0796**
AY112K021BD	**PF0712**
B3YF3323Z	**PF0608**
B3YH3323Z	**PF0244**
BK212K021AA	**PF0741**
BK212K021AB	**PF0741**
BK212M008AA	**PF0740**
BPYK2648Z	**PF0569**
BPYK2648ZB	**PF0431**
BPYK3323ZA	**PF0244**
BS512K021BA	**PF0453**
BV612K021AC	**PF0743**
C2S12638	**PF0266**
C2S12638	**PF0550**
C2S17129	**PF0266**
C2S17129	**PF0550**
C2S48022	**PF0266**
C2S48022	**PF0550**

OE	MAGNETI MARELLI
FORD	
C2Y32648ZA	**PF0431**
C2Y33323ZA	**PF0244**
CV612K021BA	**PF0604**
D10602X80A	**PF0352**
DDY23328Z	**PF0252**
DDY23328Z9C	**PF0252**
LR003655	**PF0257**
M6107E01	**PF0265**
ME9S5J2K021BB	**PF0453**
MEAV6J2M008AA	**PF0796**
UMY13328ZA	**PF0439**
UMY43323Z	**PF0439**
UMY43328Z	**PF0439**
YC152K021AC	**PF0556**
YC1J2K021AA	**PF0556**
YC1J2K021AB	**PF0556**
YM212M008DA	**PF0259**
YM2J2M008AA	**PF0259**
YS612K021AA	**PF0251**
HONDA	
06022SP8000	**PF0457**
06450S0KJ01	**PF0702**
06450S2HJ00	**PF0274**
06450S3NJ00	**PF0702**
06450SEAJ10	**PF0702**
06450SFEJ20	**PF0702**
410604U125	**PF0567**
410604U126	**PF0567**
410604U127	**PF0567**
41060AV125	**PF0567**
41060AV126	**PF0567**
43022S5AE50	**PF0462**
43022S6DE50	**PF0462**
43022S9A010	**PF0463**
43022S9AE00	**PF0463**
43022S9AE52	**PF0461**
43022SAAE50	**PF0457**
43022SD2307	**PF0457**
43022SD2930	**PF0457**
43022SE0930	**PF0457**
43022SE0931	**PF0457**
43022SE0N50	**PF0457**
43022SE0S00	**PF0457**
43022SG0G00	**PF0462**

OE	MAGNETI MARELLI
HONDA	
43022SG0G01	**PF0462**
43022SH3305	**PF0457**
43022SL5000	**PF0462**
43022SM4G00	**PF0462**
43022SMGE00	**PF0621**
43022SMGE01	**PF0621**
43022SMGE02	**PF0621**
43022SMGE03	**PF0621**
43022SO4E02	**PF0460**
43022SR2010	**PF0460**
43022SR2030	**PF0460**
43022SR3G00	**PF0460**
43022SR3G01	**PF0460**
43022SY8A01	**PF0274**
43022TA0A80	**PF0704**
43022TF0305	**PF0460**
43022TL0G50	**PF0463**
43022TL0G51	**PF0463**
43022TL0G52	**PF0463**
43022TL1G00	**PF0703**
43022TL1G01	**PF0703**
43022TL1G02	**PF0703**
43022TV0E00	**PF0798**
43022TV0E01	**PF0798**
43224SMGE01	**PF0621**
45022S04505	**PF0276**
45022S04E60	**PF0276**
45022S04G00	**PF0276**
45022S04G01	**PF0276**
45022S04J02	**PF0276**
45022S04V10	**PF0275**
45022S04V11	**PF0275**
45022S0KA01	**PF0702**
45022S10A00	**PF0274**
45022S10G01	**PF0274**
45022S1AE02	**PF0567**
45022S1AE02	**PF0567**
45022S1AE50	**PF0567**
45022S30A00	**PF0274**
45022S5AG00	**PF0275**
45022S6DE01	**PF0484**
45022S6DE50	**PF0484**
45022S74E10	**PF0484**
45022S7AE00	**PF0702**
45022SAAE51	**PF0276**

OE	MAGNETI MARELLI
HONDA	
45022SEAE01	**PF0691**
45022SEAJ11	**PF0702**
45022SHJA00	**PF0799**
45022SK3E00	**PF0484**
45022SM5A00	**PF0274**
45022SMGE00	**PF0620**
45022SMGE01	**PF0620**
45022SMGE50	**PF0620**
45022SMGE51	**PF0620**
45022SNCE00	**PF0707**
45022SR3V00	**PF0275**
45022SR3V01	**PF0275**
45022SR3V11	**PF0275**
45022SR3V12	**PF0275**
45022SS0G00	**PF0274**
45022ST7J00	**PF0276**
45022ST7J01	**PF0276**
45022ST7J02	**PF0276**
45022ST7R00	**PF0274**
45022SWWG01	**PF0799**
45022SWWG02	**PF0799**
45022SZ3G00	**PF0702**
45022SZTG00	**PF0707**
45022T1EG00	**PF0799**
45022TF0G01	**PF0707**
45022TF0G02	**PF0707**
45022TK6A00	**PF0707**
45022TL1G00	**PF0706**
45022TLG1600	**PF0706**
45022TLG1601	**PF0706**
45022TM8G00	**PF0707**
45022TV0E01	**PF0706**
45022TV0E02	**PF0706**
HYUNDAI	
4813005011	**PF0467**
4813008260	**PF0282**
4813008260	**PF0282**
5810107A20	**PF0280**
0K2JA3328Z	**PF0281**
0K2JA3328ZA	**PF0281**
1GE0058101	**PF0698**
4813008BA0	**PF0282**
48130091A0	**PF0282**
48130341A0	**PF0767**

OE	MAGNETI MARELLI
HYUNDAI	
551011WA35	**PF0766**
571012VA70	**PF0749**
58101-02A00	**PF0800**
5810102A10	**PF0655**
5810105A30	**PF0655**
5810107A10	**PF0280**
581010XA01	**PF0280**
581010XA10	**PF0280**
5810117A00	**PF0469**
581011CA10	**PF0459**
581011FE01	**PF0277**
581011GA00	**PF0698**
581011GE00	**PF0698**
581011HA00	**PF0281**
581011HA10	**PF0281**
581011HA20	**PF0281**
581011JA10	**PF0801**
581011WA05	**PF0766**
5810122A00	**PF0459**
5810122A10	**PF0459**
5810124A00	**PF0459**
5810124B00	**PF0459**
5810126A10	**PF0282**
5810126A30	**PF0282**
5810128A00	**PF0468**
5810128A20	**PF0468**
5810129A10	**PF0468**
5810129A50	**PF0459**
5810129B00	**PF0468**
581012BA10	**PF0767**
581012CA20	**PF0277**
581012DA20	**PF0467**
581012DA40	**PF0469**
581012EA10	**PF0277**
581012EA11	**PF0277**
581012EA21	**PF0277**
581012HA10	**PF0277**
581012KA10	**PF0277**
581012PA70	**PF0767**
581012VA00	**PF0749**
581012VA50	**PF0749**
581012WA00	**PF0767**
581012WA70	**PF0767**
5810133C00	**PF0468**
5810134A20	**PF0467**

OE	MAGNETI MARELLI
HYUNDAI	
5810139A40	**PF0282**
581013AA20	**PF0282**
581013CA80	**PF0468**
58101-3CA80	**PF0277**
581013KA40	**PF0277**
581013XA00	**PF0749**
581013XA20	**PF0749**
581014AA00	**PF0279**
581014AA26	**PF0282**
581014AA61	**PF0279**
581014LA00	**PF0766**
58101A6A00	**PF0749**
58101A6A01	**PF0749**
58101H1A00	**PF0472**
58101H1A01	**PF0472**
58101H1A10	**PF0472**
58101M2A02	**PF0468**
5830207A00	**PF0745**
5830207A10	**PF0745**
583020AA10	**PF0751**
583020XA00	**PF0745**
583020ZA00	**PF0701**
583020ZA00	**PF0701**
5830217A00	**PF0278**
583021CA00	**PF0278**
583021FE00	**PF0278**
583021GA00	**PF0701**
583021GA00	**PF0701**
583021HA00	**PF0701**
583021MA40	**PF0701**
583021WA35	**PF0750**
583021XA30	**PF0701**
583021XA30	**PF0701**
583021YA30	**PF0701**
5830226A00	**PF0278**
583022EA30	**PF0278**
583022EA31	**PF0751**
583022GA00	**PF0278**
583022HA51	**PF0751**
583022KA00	**PF0751**
583022KA10	**PF0751**
5830238A10	**PF0278**
5830239A40	**PF0278**
583023AA20	**PF0278**
583023CA10	**PF0278**

OE	MAGNETI MARELLI
HYUNDAI	
583023FA11	**PF0751**
583023KA31	**PF0751**
583023KA62	**PF0751**
583023LA10	**PF0751**
583023RA70	**PF0750**
583023ZA10	**PF0750**
58302A4B10	**PF0750**
58302A4B60	**PF0750**
58302A6A20	**PF0750**
583223FA01	**PF0751**
INFINITI	
410600023R	**PF0683**
410603072R	**PF0683**
41060CC090	**PF0683**
41060EB325	**PF0683**
440608H385	**PF0350**
44060CB10J	**PF0473**
44060EG085	**PF0473**
D10601MF0A	**PF0683**
D10605X00A	**PF0683**
D40601BN0A	**PF0473**
D40601MB0A	**PF0473**
D40609N00B	**PF0473**
D4060CY025	**PF0473**
D4060JA00J	**PF0350**
D4M609N00B	**PF0350**
D4M60EG50C	**PF0473**
INNOCENTI	
791235	**PF0212**
791906	**PF0212**
792538	**PF0212**
792539	**PF0212**
792552	**PF0212**
793322	**PF0212**
793323	**PF0212**
793385	**PF0105**
5882984	**PF0807**
5888528	**PF0807**
5892309	**PF0212**
5892310	**PF0212**
5892481	**PF0105**
5892549	**PF0105**
5892727	**PF0105**

OE	MAGNETI MARELLI
INNOCENTI	
5892728	PF0105
5892730	PF0105
5892733	PF0105
5892734	PF0105
5892735	PF0105
5951671	PF0212
7076375	PF0807
7076376	PF0807
7083789	PF0807
71738153	PF0807
71752994	PF0105
ISUZU	
1605010	PF0497
1605851	PF0497
89040317	PF0802
97039269	PF0497
8973682520	PF0802
8980791040	PF0449
IVECO	
1906158	PF0475
1906183	PF0547
1906401	PF0283
1906416	PF0530
1906427	PF0546
1906428	PF0476
2992339	PF0283
2994086	PF0526
2995632	PF0477
2995633	PF0526
2995693	PF0283
2996535	PF0283
2996605	PF0526
42470835	PF0526
42470841	PF0434
42535791	PF0283
42536101	PF0477
42555406	PF0434
42555669	PF0530
42555881	PF0649
42555917	PF0284
42561101	PF0434
42561355	PF0649
5001844748	PF0477

OE	MAGNETI MARELLI
JAGUAR	
C2C27271	PF0243
C2C27291	PF0824
C2C35440	PF0824
C2C36974	PF0824
C2C40926	PF0824
C2D23150	PF0823
C2D31788	PF0823
C2P17595	PF0243
C2S12638	PF0266
C2S17129	PF0266
C2S48022	PF0266
C2Z14096	PF0824
M6107E01	PF0265
MXD2750AA	PF0555
T2R7247	PF0823
T2R10202	PF0823
JEEP	
77367145	PF0794
77367213	PF0792
77367214	PF0793
77367369	PF0792
5191271AA	PF0285
5191271AB	PF0285
5191271AC	PF0285
68003701AA	PF0211
68029263AA	PF0211
68029264AA	PF0211
68029887AA	PF0210
68029887AB	PF0210
68044761AA	PF0210
68044866AA	PF0211
68044866AC	PF0211
68053152AA	PF0211
68068762AA	PF0211
68093323AB	PF0211
K68225170AB	PF0804
K68225327AB	PF0805
K68225327AC	PF0805

OE	MAGNETI MARELLI
KIA	
0K2A33323ZA	PF0287
0K2JA3328Z	PF0281
0K2JA3328ZA	PF0281
0K2N13328Z	PF0458
0K2N13328ZA	PF0458
0K30A3328Z	PF0286
0K9D03328Z	PF0458
1GE0058101	PF0698
551011WA35	PF0766
571012VA70	PF0749
5810107A10	PF0280
5810107A20	PF0280
581010XA01	PF0280
581010XA10	PF0280
581010ZA00	PF0725
581011DE00	PF0725
581011FE01	PF0277
581011GA00	PF0698
581011GE00	PF0698
581011HA00	PF0281
581011HA10	PF0281
581011HA20	PF0281
581011WA05	PF0766
581012BA10	PF0767
581012CA20	PF0277
581012DA20	PF0467
581012EA10	PF0277
581012EA11	PF0277
581012EA21	PF0277
581012HA10	PF0277
581012KA10	PF0277
581012PA70	PF0767
581012SA50	PF0725
581012VA00	PF0749
581012VA50	PF0749
581012WA00	PF0767
581012WA70	PF0767
5810134A20	PF0467
581013CA80	PF0277
581013ED00	PF0447
581013EE00	PF0447
581013KA40	PF0277
581013XA00	PF0749
581013XA20	PF0749
581014LA00	PF0766

OE	MAGNETI MARELLI
KIA	
58101A6A00	**PF0749**
58101A6A01	**PF0749**
58115FDC00	**PF0458**
5830207A00	**PF0745**
5830207A10	**PF0745**
583020AA10	**PF0751**
583020XA00	**PF0745**
583020ZA00	**PF0701**
583020ZA00	**PF0701**
5830217A00	**PF0278**
583021CA00	**PF0278**
583021FE00	**PF0278**
583021GA00	**PF0701**
583021GA00	**PF0701**
583021HA00	**PF0701**
583021MA40	**PF0701**
583021WA35	**PF0750**
583021XA30	**PF0701**
583021XA30	**PF0701**
583021YA30	**PF0701**
583021YA50	**PF0822**
5830226A00	**PF0278**
583022EA30	**PF0278**
583022EA31	**PF0751**
583022GA00	**PF0278**
583022HA51	**PF0751**
583022KA00	**PF0751**
583022KA10	**PF0751**
5830238A10	**PF0278**
5830239A40	**PF0278**
583023AA20	**PF0278**
583023CA10	**PF0278**
583023ED00	**PF0448**
583023ED01	**PF0448**
583023EE00	**PF0448**
583023FA11	**PF0751**
583023KA31	**PF0751**
583023KA62	**PF0751**
583023LA10	**PF0751**
583023RA70	**PF0750**
583023ZA10	**PF0750**
58302A4B10	**PF0750**
58302A4B60	**PF0750**
58302A6A20	**PF0750**
583223FA01	**PF0751**

OE	MAGNETI MARELLI
LANCIA	
793385	**PF0105**
794080	**PF0783**
794089	**PF0783**
5892481	**PF0105**
5892549	**PF0105**
5892727	**PF0105**
5892728	**PF0105**
5892730	**PF0105**
5892733	**PF0105**
5892734	**PF0105**
5892735	**PF0105**
5892736	**PF0218**
7736518	**PF0125**
9939503	**PF0116**
9939966	**PF0106**
9940969	**PF0116**
9941211	**PF0116**
9941605	**PF0783**
9941872	**PF0122**
9941873	**PF0116**
9942904	**PF0783**
9944329	**PF0122**
9944678	**PF0122**
9945496	**PF0783**
9945629	**PF0116**
9945775	**PF0111**
9945821	**PF0106**
9945823	**PF0783**
9946016	**PF0787**
9946568	**PF0111**
9946750	**PF0122**
9947118	**PF0222**
9947156	**PF0101**
9947629	**PF0782**
9947629	**PF0222**
9947776	**PF0104**
9947834	**PF0239**
9947934	**PF0239**
9947935	**PF0101**
9947938	**PF0106**
9948030	**PF0113**
9948092	**PF0118**
9948095	**PF0101**
9948095	**PF0101**
9948334	**PF0101**

OE	MAGNETI MARELLI
LANCIA	
9948335	**PF0112**
9948337	**PF0112**
9948338	**PF0109**
9948476	**PF0103**
9948845	**PF0103**
9949203	**PF0114**
9949273	**PF0126**
9949276	**PF0214**
9949279	**PF0563**
9949280	**PF0125**
9949293	**PF0289**
9949332	**PF0109**
9949334	**PF0109**
9949340	**PF0126**
9949552	**PF0182**
9949556	**PF0558**
9950479	**PF0783**
9950550	**PF0122**
9950637	**PF0104**
9950778	**PF0101**
9950865	**PF0106**
9951050	**PF0113**
9951101	**PF0118**
9951155	**PF0113**
9951217	**PF0103**
9951222	**PF0109**
9951226	**PF0112**
60777601	**PF0783**
60777621	**PF0122**
71712910	**PF0111**
71713143	**PF0101**
71713144	**PF0112**
71737178	**PF0218**
71748391	**PF0122**
71752981	**PF0239**
71752983	**PF0126**
71752984	**PF0106**
71752987	**PF0111**
71752989	**PF0222**
71752992	**PF0787**
71752994	**PF0105**
71753039	**PF0103**
71754146	**PF0111**
71754804	**PF0291**
71769053	**PF0788**

OE	MAGNETI MARELLI
LANCIA	
71769094	PF0125
71770953	PF0222
71770954	PF0782
71770965	PF0228
71770974	PF0787
71772213	PF0182
77362084	PF0222
77362087	PF0106
77362093	PF0563
77362179	PF0558
77362190	PF0239
77362193	PF0103
77362194	PF0126
77362195	PF0214
77362199	PF0222
77362202	PF0101
77362222	PF0101
77362226	PF0113
77362228	PF0118
77362229	PF0103
77362231	PF0103
77362236	PF0182
77362237	PF0787
77362242	PF0106
77362251	PF0112
77362254	PF0118
77362257	PF0111
77362273	PF0114
77362275	PF0109
77362276	PF0109
77362300	PF0104
77362327	PF0112
77362343	PF0111
77362351	PF0222
77362354	PF0106
77362359	PF0291
77362360	PF0291
77362548	PF0126
77362683	PF0101
77362712	PF0214
77362743	PF0228
77362768	PF0125
77363035	PF0558
77363341	PF0109
77363420	PF0214

OE	MAGNETI MARELLI
LANCIA	
77363518	PF0125
77363545	PF0113
77363579	PF0114
77363580	PF0114
77363818	PF0114
77363819	PF0114
77363942	PF0126
77363956	PF0182
77363958	PF0214
77363992	PF0558
77364265	PF0113
77364273	PF0114
77364281	PF0214
77364331	PF0290
77364332	PF0290
77364393	PF0126
77364447	PF0182
77364587	PF0113
77364589	PF0563
77364590	PF0125
77364599	PF0214
77364839	PF0109
77364874	PF0126
77364893	PF0558
77364897	PF0214
77364919	PF0558
77364929	PF0288
77365113	PF0228
77365188	PF0124
77365217	PF0290
77365218	PF0290
77365266	PF0113
77365311	PF0288
77365396	PF0288
77365786	PF0109
77365789	PF0291
77365808	PF0563
77365809	PF0568
77365927	PF0428
77365945	PF0428
77366212	PF0428
77366274	PF0428
77366378	PF0428
95511378	PF0288
95515028	PF0288

OE	MAGNETI MARELLI
LANCIA	
98845078	PF0558
9404251248	PF0242
9404252328	PF0131
4B0698451	PF0131
68003701AA	PF0211
68028671AA	PF0445
68029263AA	PF0211
68029264AA	PF0211
68029887AA	PF0210
68029887AB	PF0210
68044761AA	PF0210
68044866AA	PF0211
68044866AC	PF0211
68053152AA	PF0211
68068762AA	PF0211
68093323AB	PF0211
68102483AA	PF0428
K68028671AA	PF0445
LAND ROVER	
GBP90315	PF0484
GBP90315AF	PF0484
GBP90315AF	PF0484
GBP90325AF	PF0484
GBP90336AF	PF0484
LR003655	PF0257
SFC000010	PF0580
SFC500050	PF0580
SFC500080	PF0580
SFP000120	PF0152
SFP000210	PF0152
SFP100260	PF0484
SFP500230	PF0152
LEXUS	
0446506070	PF0641
0446506100	PF0641
0446506110	PF0641
0446507010	PF0641
0446533440	PF0641
0446533450	PF0641
0446533470	PF0641
0446533471	PF0641
0446548150	PF0634
0446548160	PF0634

OE	MAGNETI MARELLI
LEXUS	
0446548170	PF0634
0446553020	PF0637
0446553040	PF0637
0446606090	PF0633
0446606100	PF0633
0446622190	PF0638
0446630240	PF0638
0446633160	PF0633
0446633180	PF0633
0446633200	PF0637
0446642060	PF0633
0446647070	PF0636
0446648130	PF0636
0446648140	PF0636
0446653010	PF0638
044650E010	PF0634
044660E010	PF0636
04465YZZEG	PF0641
04466YZZE8	PF0633
LEYLAND	
2995632	PF0477
0034204620	PF0477
42536101	PF0477
5001844748	PF0477
LOTUS	
1605496	PF0354
1605544	PF0354
1605586	PF0354
1605670	PF0354
1605795	PF0354
1605870	PF0354
90167765	PF0354
90398758	PF0354
90398759	PF0354
90443902	PF0354
MASERATI	
34211164581	PF0485
34212227325	PF0485

OE	MAGNETI MARELLI
MAZDA	
1101462	PF0252
1101464	PF0252
1111857	PF0251
1128463	PF0252
1130715	PF0251
1206062	PF0251
1206064	PF0252
1223682	PF0244
1236880	PF0252
1321517	PF0244
1360254	PF0431
1360306	PF0431
1368558	PF0608
1464435	PF0608
1519528	PF0244
1676630	PF0254
30683274	PF0608
30683554	PF0244
30714791	PF0608
30736610	PF0431
30742029	PF0608
30742030	PF0244
30742031	PF0244
93176116	PF0431
93183140	PF0431
93188031	PF0608
93190338	PF0431
04465B1320	PF0254
0465B1120	PF0254
0465B1190	PF0254
0K30A3328Z	PF0286
1010503	PF0248
1013843	PF0250
1030602	PF0248
1042687	PF0250
1042688	PF0248
1064762	PF0250
1064763	PF0248
1079919	PF0250
1079920	PF0248
1090276	PF0250
1233679	PF0569
1324300	PF0569
1356600	PF0439
1360290	PF0439

OE	MAGNETI MARELLI
MAZDA	
1465126	PF0250
1521328	PF0252
1550219	PF0254
1609899680	PF0678
1719275	PF0254
1749322	PF0254
1783839	PF0252
1788734	PF0254
1788734	PF0254
1E033323Z	PF0250
1E063323Z	PF0248
1E063323ZA	PF0248
1E103323Z	PF0252
1E123323Z	PF0251
2M342001CA	PF0439
3M512M008AC	PF0431
3M5J2K021AA	PF0244
3M5J2M008AA	PF0431
4432201	PF0439
4432234	PF0439
4605A041	PF0342
4605A998	PF0678
4605B070	PF0678
4605B071	PF0678
5018899	PF0248
5581068L00	PF0684
6E5Z2001B	PF0699
6E5Z2001B	PF0699
8V512K021BA	PF0254
93195754	PF0608
96FB2K021AA	PF0250
97FB2K021BA	PF0248
97FU2K021CA	PF0250
98FB2K021AA	PF0250
B2YD-33-23Z	PF0293
B3YF3323Z	PF0608
B3YH3323Z	PF0244
B4Y02648ZA	PF0809
B4Y03328ZA	PF0808
B4Y63323Z	PF0286
B5Y63323Z	PF0286
B5Y63328Z	PF0286
B5Y63328Z9A	PF0286
B6Y82643Z	PF0294
B6Y82643ZA	PF0294

OE	MAGNETI MARELLI
MAZDA	
B6Y82648Z	**PF0294**
BCYW3323Z	**PF0286**
BHY13328ZA	**PF0808**
BJYD3323Z	**PF0293**
BJYD3328Z	**PF0293**
BJYM3323Z	**PF0293**
BPYK2648Z	**PF0569**
BPYK2648ZB	**PF0431**
BPYK3323ZA	**PF0244**
C2Y32648ZA	**PF0431**
C2Y33323ZA	**PF0244**
CBY43323Z	**PF0466**
CBY43328Z	**PF0466**
CBY53328Z	**PF0466**
DCY03323ZA	**PF0286**
DDY23328Z	**PF0252**
DDY23328Z9C	**PF0252**
DFY13328Z	**PF0684**
DFY13328ZA	**PF0684**
G1YC3323ZA	**PF0466**
G1YN3328Z	**PF0466**
G1YN3328ZA	**PF0466**
G1YN3328ZB	**PF0466**
G2YS3323ZA	**PF0295**
GEYT3328ZA	**PF0296**
GGYB2648Z	**PF0294**
GGYM2643Z	**PF0294**
GHY92648Z	**PF0678**
GHY93328Z	**PF0677**
GHY93328ZA	**PF0677**
GHY93328ZB	**PF0677**
GHY93328ZC	**PF0677**
GJYA2643Z	**PF0294**
GJYB2643Z	**PF0294**
GJYB2648Z	**PF0294**
GJYB2648Z9C	**PF0294**
GJYB2648ZA9C	**PF0294**
GJYB3323ZC	**PF0465**
GJYE3323ZB	**PF0295**
GJYF3323ZB	**PF0295**
GJYG3328Z	**PF0295**
GJYG3328Z9C	**PF0295**
GPYB3323ZD	**PF0699**
GPYB3323ZE	**PF0699**
GPYB3323ZG	**PF0699**

OE	MAGNETI MARELLI
MAZDA	
GPYB3328ZD	**PF0699**
GSYD3323Z	**PF0699**
GSYD3323ZA	**PF0699**
GSYD3328Z	**PF0699**
GSYD3328ZA	**PF0699**
K0BA23328Z	**PF0286**
K0Y12648Z	**PF0711**
K0Y13323Z	**PF0710**
K0Y13328Z	**PF0710**
K0Y13328ZA	**PF0710**
KDY93328Z	**PF0710**
MN116445	**PF0342**
MR407422	**PF0342**
MR510539	**PF0342**
MR527868	**PF0342**
SHY63323Z	**PF0342**
SHY63328Z	**PF0342**
UMY13328ZA	**PF0439**
UMY43323Z	**PF0439**
UMY43328Z	**PF0439**
YS612K021AA	**PF0251**
MCC SMART	
4514210010	**PF0398**
4514210110	**PF0398**
4544200920	**PF0334**
4544201020	**PF0522**
0001431V002	**PF0398**
0001431V003	**PF0398**
A4544201020	**PF0522**
A4544201920	**PF0334**
C0001431V002	**PF0398**
MERCEDES - BENZ	
002403820	**PF0322**
004200720	**PF0315**
0004208820	**PF0304**
0004208920	**PF0305**
0004209020	**PF0304**
0004209120	**PF0305**
004209720	**PF0319**
0004209820	**PF0306**
004214110	**PF0327**
004214120	**PF0327**
0004214210	**PF0328**

OE	MAGNETI MARELLI
MERCEDES - BENZ	
004216110	**PF0329**
004216110	**PF0617**
004216210	**PF0330**
004237110	**PF0525**
0014200120	**PF0304**
0014200220	**PF0307**
0014201020	**PF0305**
0014209520	**PF0307**
0014209620	**PF0305**
0014211010	**PF0330**
0024200220	**PF0305**
0024201620	**PF0303**
24203920	**PF0321**
0024204120	**PF0525**
0024204420	**PF0310**
0024204620	**PF0303**
0024205020	**PF0315**
0024205120	**PF0297**
0024205220	**PF0553**
0024205620	**PF0322**
0024206920	**PF0322**
0024207420	**PF0311**
0024209620	**PF0310**
0024209920	**PF0504**
0034200020	**PF0326**
0034200120	**PF0327**
0034200120	**PF0327**
0034200220	**PF0328**
0034200520	**PF0320**
0034200820	**PF0320**
0034201720	**PF0524**
0034201820	**PF0320**
0034201920	**PF0584**
0034202420	**PF0319**
0034202520	**PF0312**
0034202620	**PF0312**
34202720	**PF0311**
0034202820	**PF0553**
0034202920	**PF0315**
0034204220	**PF0320**
0034204520	**PF0312**
0034204620	**PF0480**
0034204620	**PF0481**
0034204820	**PF0303**
0034204920	**PF0303**

OE	MAGNETI MARELLI
MERCEDES - BENZ	
0034205220	PF0553
0034205420	PF0327
0034205820	PF0585
0034206020	PF0312
0034206420	PF0322
0034207820	PF0329
0034207820	PF0617
0034207910	PF0329
0034207910	PF0617
0034208320	PF0315
0034208920	PF0320
0044200220	PF0310
0044200320	PF0315
0044200420	PF0320
0044200520	PF0585
0044200720	PF0315
0044201420	PF0325
0044201520	PF0524
0044201620	PF0303
0044201720	PF0311
0044202420	PF0324
0044202420	PF0524
0044202720	PF0323
0044204020	PF0639
0044204420	PF0316
0044205220	PF0640
0044205620	PF0322
0044206220	PF0317
0044206720	PF0298
44206820	PF0647
44206920	PF0300
44208120	PF0299
44208220	PF0647
44208320	PF0298
0044209020	PF0585
044209120	PF0311
0054200820	PF0313
0054200920	PF0313
0054201320	PF0653
0054201320	PF0654
0054201520	PF0313
0054201720	PF0307
0054201820	PF0297
0054201920	PF0553
54202120	PF0298

OE	MAGNETI MARELLI
MERCEDES - BENZ	
0054204720	PF0310
0054204920	PF0314
54205220	PF0298
0054206220	PF0312
54207020	PF0298
54207420	PF0299
0054207820	PF0317
0054207920	PF0316
0054209320	PF0316
0064200120	PF0316
0064201220	PF0320
0064202320	PF0736
0064203220	PF0585
0064204420	PF0330
0064206120	PF0314
0064206220	PF0312
0064207920	PF0736
0064208020	PF0736
0064208320	PF0736
0064208420	PF0735
0064208520	PF0734
0074209420	PF0736
0074209520	PF0736
1634200620	PF0320
1634200820	PF0320
1644200820	PF0639
1644201520	PF0640
1644201820	PF0639
1684200020	PF0301
1684200120	PF0301
1684200420	PF0308
1684200720	PF0301
1694200120	PF0309
1694200420	PF0308
1694200720	PF0302
1694200820	PF0309
1694200920	PF0302
1694201020	PF0302
1694201120	PF0308
1694201220	PF0309
1694201320	PF0302
1694201720	PF0308
1694201820	PF0302
002420512037	PF0297
4154210310	PF0661

OE	MAGNETI MARELLI
MERCEDES - BENZ	
4154210410	PF0660
4154210510	PF0347
4154210610	PF0661
4604200020	PF0325
6014207620	PF0325
6014208720	PF0325
6014210208	PF0325
6014210608	PF0325
6694210008	PF0325
7701208422	PF0347
7701209864	PF0661
7701209869	PF0660
7701210110	PF0661
9014210410	PF0321
9014210510	PF0321
9014210610	PF0321
9024210110	PF0525
9064210010	PF0298
0044208020	PF0317
05114555AA	PF0315
05139218AA	PF0315
291698151A	PF0325
A0004236110	PF0327
A0004236210	PF0328
A0014208120	PF0305
A0014210910	PF0329
A0014210910	PF0617
A0014211010	PF0330
A0024203920	PF0321
A0024204120	PF0524
A0024204420	PF0310
A0024205020	PF0315
A0024205120	PF0297
A0024205220	PF0553
A0024205520	PF0321
A0024207120	PF0311
A0024209620	PF0310
A0024209920	PF0504
A0030240220	PF0328
A0034201820	PF0320
A0034201920	PF0584
A0034202820	PF0553
A0034204620	PF0480
A0034205120	PF0316
A0034206520	PF0318

OE	MAGNETI MARELLI
MERCEDES - BENZ	
A0034207820	**PF0329**
A0034207820	**PF0617**
A0034207910	**PF0329**
A0034207910	**PF0617**
A0034208720	**PF0318**
A0034209920	**PF0318**
A0034209920	**PF0318**
A0044200220	**PF0310**
A004420052067	**PF0585**
A0044202420	**PF0324**
A0044202720	**PF0323**
A0044206720	**PF0298**
A0044206920	**PF0300**
A0044208320	**PF0298**
A0044208720	**PF0318**
A0045200920	**PF0653**
A0045200920	**PF0654**
A0054200720	**PF0314**
A0054200820	**PF0313**
A0054200920	**PF0313**
A0054201020	**PF0653**
A0054201020	**PF0654**
A0054201220	**PF0313**
A0054201520	**PF0313**
A0054201620	**PF0653**
A0054201620	**PF0654**
A0054201920	**PF0553**
A0054204220	**PF0314**
A0054204320	**PF0314**
A0054204720	**PF0310**
A0054204920	**PF0314**
A0054208120	**PF0314**
A0054209320	**PF0316**
A0064201320	**PF0314**
A0064202320	**PF0736**
A0064202820	**PF0653**
A0064202820	**PF0654**
A0064204420	**PF0330**
A0064204620	**PF0734**
A0064204820	**PF0735**
A0064206120	**PF0314**
A0064207920	**PF0736**
A0064208020	**PF0736**
A0064208520	**PF0734**
A0074201020	**PF0316**

OE	MAGNETI MARELLI
MERCEDES - BENZ	
A0074205520	**PF0313**
A0074205620	**PF0313**
A0074206720	**PF0316**
A0074208520	**PF0314**
A1684200020	**PF0301**
A1694201220	**PF0309**
A1694201320	**PF0302**
A1694201820	**PF0302**
A1694201920	**PF0309**
A1904200220	**PF0302**
A4144200120	**PF0308**
A4144200220	**PF0517**
A4154210310	**PF0661**
A4154210410	**PF0660**
A4154210510	**PF0347**
A4154210610	**PF0661**
A6014210408	**PF0325**
A9014210410	**PF0321**
A9014210510	**PF0321**
MG	
34211164499	**PF0157**
34211164501	**PF0157**
34214398213	**PF0157**
34216750190	**PF0157**
34216778168	**PF0157**
43022SAAE50	**PF0457**
43022SD2307	**PF0457**
43022SD2930	**PF0457**
43022SE0930	**PF0457**
43022SE0931	**PF0457**
43022SE0N50	**PF0457**
43022SE0S00	**PF0457**
43022SH3305	**PF0457**
45022S6DE01	**PF0484**
45022S74E10	**PF0484**
45022SK3E00	**PF0484**
GBP316AF	**PF0457**
GBP90315	**PF0484**
GBP90315AF	**PF0484**
GBP90315AF	**PF0484**
GBP90325AF	**PF0484**
GBP90336AF	**PF0484**
GBP90341AF	**PF0157**
SFP100260	**PF0484**

OE	MAGNETI MARELLI
MG	
SFP100520	**PF0157**
MINI	
34111503076	**PF0332**
34116761287	**PF0332**
34116765446	**PF0332**
34116767143	**PF0147**
34116767144	**PF0147**
34116770251	**PF0619**
34116770332	**PF0332**
34116771837	**PF0147**
34116772892	**PF0147**
34116774050	**PF0147**
34116778320	**PF0619**
34116794056	**PF0147**
34119804735	**PF0619**
34119808705	**PF0619**
34211503077	**PF0574**
34216761288	**PF0574**
34216762871	**PF0331**
34216770251	**PF0619**
34216770252	**PF0331**
34216778327	**PF0626**
34219804739	**PF0623**
34219808172	**PF0623**
MITSUBISHI	
4605A041	**PF0342**
4605A198	**PF0337**
4605A261	**PF0338**
4605A284	**PF0337**
4605A336	**PF0285**
4605A337	**PF0285**
4605A447	**PF0340**
4605A448	**PF0340**
4605A472	**PF0409**
4605A479	**PF0285**
4605A486	**PF0338**
4605A491	**PF0338**
4605A492	**PF0339**
4605A493	**PF0285**
4605A557	**PF0338**
4605A558	**PF0285**
4605A717	**PF0339**
4605A730	**PF0339**

OE	MAGNETI MARELLI
MITSUBISHI	
4605A734	**PF0521**
4605A774	**PF0339**
4605A795	**PF0338**
4605A879	**PF0338**
4605A998	**PF0678**
4605B070	**PF0678**
4605B071	**PF0678**
4605B281	**PF0791**
4813008BA0	**PF0282**
48130091A0	**PF0282**
5191271AA	**PF0285**
5191271AB	**PF0285**
5191271AC	**PF0285**
5810126A10	**PF0282**
A4544201920	**PF0334**
DB521159	**PF0341**
DBP511117	**PF0334**
GHY92648Z	**PF0678**
K68028671AA	**PF0340**
M850976	**PF0335**
M850978	**PF0336**
MB699453	**PF0339**
MB699453	**PF0339**
MB699464	**PF0333**
MB699473	**PF0333**
MB850978	**PF0336**
MB857987	**PF0339**
MB858380	**PF0341**
MB858400	**PF0339**
MB858463	**PF0341**
MB928816	**PF0333**
MB928817	**PF0333**
MB950555	**PF0333**
MN102618	**PF0338**
MN116445	**PF0342**
MN116929	**PF0285**
MR205256	**PF0810**
MR205257	**PF0810**
MR205377	**PF0336**
MR235557	**PF0334**
MR249240	**PF0520**
MR249241	**PF0334**
MR389508	**PF0333**
MR389547	**PF0810**
MR389549	**PF0496**

OE	MAGNETI MARELLI
MITSUBISHI	
MR389550	**PF0810**
MR407376	**PF0499**
MR407422	**PF0342**
MR407946	**PF0334**
MR510539	**PF0342**
MR527656	**PF0335**
MR527674	**PF0338**
MR527675	**PF0338**
MR527868	**PF0342**
MR569403	**PF0338**
MR850978	**PF0336**
MR955068	**PF0285**
MR977117	**PF0521**
MZ690336	**PF0334**
MZ690339	**PF0335**
MZ690345	**PF0336**
MZ690346	**PF0340**
MZ690356	**PF0337**
PW891172	**PF0333**
SHY63323Z	**PF0342**
SHY63328Z	**PF0342**
X3511007	**PF0334**
X3516005	**PF0336**
NISSAN	
5001844748	**PF0478**
5001868606	**PF0650**
5001868608	**PF0573**
6025371279	**PF0371**
6025371662	**PF0371**
7485116333	**PF0650**
7701050914	**PF0371**
7701050918	**PF0370**
7701054771	**PF0371**
7701054772	**PF0370**
7701205996	**PF0200**
7701206343	**PF0348**
7701206609	**PF0349**
7701206727	**PF0366**
7701206763	**PF0365**
7701206784	**PF0348**
7701207339	**PF0366**
7701207968	**PF0349**
7701208142	**PF0200**
7701208213	**PF0348**

OE	MAGNETI MARELLI
NISSAN	
7701208416	**PF0348**
7701208421	**PF0348**
7701208422	**PF0347**
04465B1010	**PF0471**
04465B1020	**PF0471**
04465B1050	**PF0471**
04465B1110	**PF0471**
04465B1380	**PF0471**
410600023R	**PF0683**
4106000QAD	**PF0366**
4106000QAD	**PF0366**
4106000QAE	**PF0371**
410600F025	**PF0352**
410601F025	**PF0346**
410601N090	**PF0343**
410601N090	**PF0518**
410601N890	**PF0343**
410602F525	**PF0344**
410602F526	**PF0344**
410602X825	**PF0352**
410602X825	**PF0352**
410603072R	**PF0683**
410603N390	**PF0343**
410604076R	**PF0347**
410604A00B	**PF0471**
410604U125	**PF0567**
410604U126	**PF0567**
410604U127	**PF0566**
410604U127	**PF0567**
410605M325	**PF0344**
410605M326	**PF0344**
410606F626	**PF0346**
410608481R	**PF0347**
4106099B25	**PF0346**
4106099B26	**PF0346**
410609C125	**PF0352**
410609C525	**PF0352**
410609C526	**PF0352**
410609F926	**PF0344**
410609X225	**PF0557**
410609X226	**PF0557**
41060AV125	**PF0567**
41060AV126	**PF0566**
41060AV126	**PF0567**
41060AX601	**PF0347**

OE	MAGNETI MARELLI
NISSAN	
41060AX625	PF0347
41060BM525	PF0344
41060CC090	PF0683
41060EB325	PF0683
41060MB225	PF0479
41060MB625	PF0479
4406000QAE	PF0365
4406000QAF	PF0370
440600295R	PF0348
440600M890	PF0519
440603F025	PF0345
440603F085	PF0345
440603FD85	PF0345
440605713R	PF0348
440605839R	PF0348
4406070J25	PF0345
4406070J26	PF0345
440607960R	PF0348
440608H385	PF0350
44060AV625	PF0349
44060AV725	PF0349
44060BM425	PF0345
44060BM426	PF0345
44060CB10J	PF0473
44060EG085	PF0473
45022S1AE02	PF0567
45022S1AE02	PF0567
45022S1AE50	PF0567
5580077K00	PF0473
55810M79F10	PF0471
5810128A00	PF0468
5810128A20	PF0468
5810129A10	PF0468
5810129B00	PF0468
581012DA20	PF0467
5810133C00	PF0468
5810134A20	PF0467
581013CA80	PF0468
58101M2A02	PF0468
A4154210510	PF0347
D10601HA0A	PF0594
D10601HA0B	PF0594
D10601KA1A	PF0696
D10601MF0A	PF0683
D10602X80A	PF0352

OE	MAGNETI MARELLI
NISSAN	
D10604CA0A	PF0812
D10604EA0A	PF0811
D10605X00A	PF0683
D1060AX60A	PF0347
D1060AX60F	PF0347
D1060AX61A	PF0347
D1060BM50A	PF0344
D1060EM10A	PF0696
D1060JD00A	PF0351
D1060JD00J	PF0351
D1060MB600	PF0650
D1060MB60A	PF0650
D1M60JE00A	PF0351
D40601BN0A	PF0473
D40601MB0A	PF0473
D40609N00B	PF0473
D4060BM40A	PF0345
D4060CY025	PF0473
D4060JA00J	PF0350
D4060MA000	PF0573
D4M609N00B	PF0350
D4M60EG50C	PF0473
OPEL	
1305355	PF0618
1360254	PF0431
1360306	PF0431
1604104	PF0690
1605000	PF0355
1605009	PF0523
1605010	PF0497
1605025	PF0357
1605031	PF0368
1605034	PF0355
1605035	PF0523
1605036	PF0360
1605070	PF0355
1605079	PF0612
1605080	PF0364
1605081	PF0362
1605086	PF0356
1605089	PF0205
1605091	PF0355
1605092	PF0362
1605093	PF0357

OE	MAGNETI MARELLI
OPEL	
1605099	PF0364
1605100	PF0502
1605104	PF0690
1605105	PF0357
1605121	PF0355
1605122	PF0356
1605128	PF0356
1605137	PF0369
1605140	PF0433
1605164	PF0288
1605169	PF0694
1605175	PF0502
1605176	PF0433
1605178	PF0424
1605180	PF0433
1605184	PF0559
1605199	PF0370
1605202	PF0363
1605230	PF0230
1605233	PF0356
1605252	PF0364
1605258	PF0361
1605280	PF0813
1605281	PF0814
1605353	PF0361
1605354	PF0561
1605355	PF0618
1605356	PF0230
1605359	PF0361
1605366	PF0690
1605397	PF0552
1605434	PF0724
1605454	PF0205
1605496	PF0354
1605544	PF0354
1605586	PF0354
1605624	PF0723
1605625	PF0356
1605670	PF0354
1605687	PF0368
1605688	PF0367
1605728	PF0359
1605789	PF0205
1605795	PF0354
1605799	PF0368

OE	MAGNETI MARELLI
OPEL	
1605808	PF0205
1605810	PF0208
1605824	PF0208
1605851	PF0497
1605870	PF0354
1605877	PF0359
1605878	PF0367
1605881	PF0208
1605907	PF0208
1605911	PF0205
1605912	PF0360
1605924	PF0368
1605924	PF0368
1605957	PF0523
1605959	PF0355
1605961	PF0357
1605964	PF0551
1605965	PF0552
1605966	PF0360
1605967	PF0356
1605972	PF0162
1605973	PF0349
1605974	PF0362
1605979	PF0544
1605980	PF0366
1605982	PF0365
1605995	PF0358
1605996	PF0364
1605998	PF0364
1777990	PF0360
1805086	PF0356
4402993	PF0366
4403467	PF0365
4404485	PF0366
4404585	PF0366
4404777	PF0544
4414021	PF0371
4414029	PF0370
4414519	PF0371
4414520	PF0370
4467072	PF0359
4501150	PF0544
4502797	PF0544
4704578	PF0548
4708239	PF0353

OE	MAGNETI MARELLI
OPEL	
4711040	PF0353
4837241	PF0368
4839924	PF0386
5055371	PF0386
5057336	PF0368
5062203	PF0386
5062211	PF0386
5064795	PF0386
5232350	PF0360
5581083	PF0548
9110993	PF0366
9111467	PF0365
9112777	PF0544
9117717	PF0357
9161450	PF0544
9162600	PF0544
09192157	PF0523
9193251	PF0357
9193251	PF0357
9194893	PF0548
9195145	PF0523
9195607	PF0355
9195685	PF0357
9198598	PF0357
9198688	PF0360
9199257	PF0371
9199262	PF0370
9200108	PF0362
9200132	PF0552
9201354	PF0368
9214424	PF0548
9317364	PF0371
9949276	PF0214
11046152	PF0205
12759808	PF0360
12799240	PF0349
12802167	PF0612
12803551	PF0162
13237750	PF0723
13237751	PF0724
13237752	PF0363
13237765	PF0690
13237766	PF0690
13237768	PF0690
13300867	PF0433

OE	MAGNETI MARELLI
OPEL	
13301207	PF0694
13301234	PF0424
13301234	PF0694
13319293	PF0433
13319294	PF0433
13329562	PF0502
13343450	PF0690
13343451	PF0690
13374966	PF0694
13411116	PF0502
13411380	PF0433
13411383	PF0433
13412272	PF0694
13412810	PF0424
22791925	PF0502
30736610	PF0431
77362195	PF0214
77362712	PF0214
77363420	PF0214
77363604	PF0162
77363958	PF0214
77363959	PF0230
77364281	PF0214
77364599	PF0214
77364897	PF0214
77364929	PF0288
77365311	PF0288
77365396	PF0288
90167765	PF0354
90273261	PF0367
90278133	PF0359
90279383	PF0367
90297537	PF0359
90297770	PF0205
90374747	PF0208
90374748	PF0208
90398758	PF0354
90398759	PF0354
90398760	PF0205
90442995	PF0208
90443902	PF0354
90485136	PF0359
90485138	PF0368
90510331	PF0208
90510331	PF0208

OE	MAGNETI MARELLI
OPEL	
90512037	PF0360
90540177	PF0368
90544001	PF0523
90544025	PF0355
90544439	PF0360
93166798	PF0162
93166941	PF0612
93167073	PF0361
93169143	PF0356
93169177	PF0230
93169254	PF0361
93170602	PF0356
93172174	PF0162
93172261	PF0362
93173148	PF0548
93173182	PF0365
93173379	PF0355
93173646	PF0370
93176114	PF0362
93176116	PF0431
93176117	PF0552
93176121	PF0162
93176122	PF0205
93176379	PF0612
93176429	PF0364
93179164	PF0358
93179707	PF0364
93181189	PF0364
93183140	PF0431
93183729	PF0162
93184269	PF0362
93184519	PF0355
93186003	PF0162
93186713	PF0364
93188112	PF0162
93189698	PF0364
93189815	PF0361
93189816	PF0561
93189822	PF0618
93189823	PF0230
93189823	PF0618
93190218	PF0552
93190338	PF0431
93191698	PF0361
93191802	PF0360

OE	MAGNETI MARELLI
OPEL	
93192063	PF0371
93192578	PF0364
93192637	PF0205
93192749	PF0386
93192962	PF0353
93196814	PF0353
93267112	PF0531
93370275	PF0362
95507655	PF0356
95511378	PF0288
95513810	PF0559
95515028	PF0288
95515197	PF0365
97039269	PF0497
PEUGEOT	
424833	PF0175
424862	PF0372
424874	PF0372
425017	PF0372
425018	PF0372
425051	PF0372
425054	PF0175
425056	PF0144
425069	PF0372
425071	PF0197
425072	PF0372
425081	PF0375
425097	PF0372
425103	PF0195
425104	PF0197
425106	PF0175
425108	PF0131
425109	PF0787
425110	PF0787
425111	PF0788
425112	PF0788
425116	PF0789
425117	PF0789
425118	PF0184
425119	PF0184
425122	PF0195
425126	PF0192
425128	PF0166
425128	PF0166

OE	MAGNETI MARELLI
PEUGEOT	
425130	PF0375
425131	PF0374
425132	PF0202
425134	PF0196
425137	PF0372
425138	PF0196
425139	PF0196
425142	PF0196
425143	PF0202
425144	PF0202
425146	PF0197
425147	PF0372
425148	PF0790
425148	PF0197
425150	PF0192
425151	PF0192
425152	PF0538
425152	PF0537
425154	PF0786
425155	PF0786
425160	PF0202
425164	PF0166
425165	PF0168
425165	PF0168
425166	PF0200
425167	PF0196
425169	PF0200
425170	PF0196
425188	PF0195
425191	PF0200
425193	PF0375
425196	PF0197
425197	PF0197
425203	PF0537
425204	PF0512
425204	PF0200
425205	PF0200
425206	PF0202
425207	PF0498
425208	PF0482
425209	PF0201
425212	PF0201
425218	PF0170
425220	PF0182
425221	PF0170

OE	MAGNETI MARELLI
PEUGEOT	
425222	PF0176
425223	PF0131
425224	PF0183
425225	PF0185
425226	PF0183
425227	PF0185
425228	PF0201
425228	PF0512
425229	PF0537
425230	PF0482
425231	PF0182
425232	PF0131
425233	PF0131
425235	PF0176
425238	PF0174
425239	PF0170
425240	PF0170
425241	PF0131
425242	PF0186
425243	PF0186
425244	PF0187
425245	PF0187
425246	PF0188
425247	PF0188
425252	PF0176
425254	PF0498
425259	PF0170
425260	PF0178
425263	PF0168
425266	PF0482
425268	PF0374
425274	PF0790
425276	PF0174
425277	PF0376
425278	PF0615
425279	PF0616
425294	PF0615
425302	PF0201
425305	PF0201
425316	PF0195
425320	PF0201
425322	PF0179
425323	PF0178
425325	PF0179
425326	PF0616

OE	MAGNETI MARELLI
PEUGEOT	
425327	PF0172
425328	PF0172
425330	PF0170
425331	PF0176
425332	PF0376
425336	PF0615
425337	PF0615
425338	PF0174
425339	PF0176
425340	PF0179
425341	PF0170
425342	PF0174
425343	PF0656
425344	PF0178
425347	PF0376
425348	PF0615
425355	PF0189
425356	PF0189
425357	PF0189
425358	PF0189
425359	PF0191
425360	PF0191
425361	PF0169
425363	PF0193
425364	PF0193
425365	PF0193
425366	PF0193
425367	PF0194
425368	PF0194
425370	PF0176
425373	PF0190
425374	PF0190
425375	PF0190
425376	PF0190
425383	PF0615
425388	PF0496
425391	PF0340
425393	PF0373
425401	PF0179
425404	PF0616
425410	PF0615
425411	PF0615
425412	PF0169
425413	PF0169
425414	PF0171

OE	MAGNETI MARELLI
PEUGEOT	
425415	PF0171
425418	PF0176
425419	PF0179
425421	PF0616
425425	PF0169
425426	PF0373
425429	PF0171
425431	PF0697
425433	PF0171
425435	PF0754
425440	PF0179
425442	PF0790
425444	PF0754
425446	PF0754
425448	PF0340
425448	PF0340
425450	PF0195
425451	PF0789
425452	PF0184
425453	PF0787
425454	PF0192
425455	PF0183
425456	PF0185
425457	PF0182
425458	PF0186
425459	PF0187
425461	PF0189
425462	PF0189
425463	PF0190
425464	PF0190
425466	PF0788
425468	PF0188
425469	PF0191
425471	PF0176
425474	PF0172
425475	PF0170
425476	PF0179
425478	PF0615
425480	PF0615
425482	PF0196
425484	PF0538
425485	PF0786
425486	PF0174
425487	PF0201
425488	PF0656

OE	MAGNETI MARELLI
PEUGEOT	
425488	**PF0178**
425489	**PF0176**
425491	**PF0616**
425492	**PF0176**
425493	**PF0166**
425494	**PF0201**
425497	**PF0194**
425498	**PF0168**
525251	**PF0192**
795915	**PF0192**
1001096	**PF0131**
1027650	**PF0131**
1360254	**PF0431**
1360306	**PF0431**
95659340	**PF0168**
95659341	**PF0197**
95666970	**PF0168**
95666971	**PF0197**
95667764	**PF0175**
1607083180	**PF0697**
1608520480	**PF0171**
1608520680	**PF0754**
1608681680	**PF0754**
1609899680	**PF0678**
1609987980	**PF0656**
1610100580	**PF0756**
1610103580	**PF0756**
1610103780	**PF0669**
1610103880	**PF0669**
1610489680	**PF0174**
1611293980	**PF0170**
1612433780	**PF0643**
9404251248	**PF0242**
9404251518	**PF0192**
9404252328	**PF0131**
9467548887	**PF0193**
9467548887	**PF0193**
9467548987	**PF0193**
9467548987	**PF0193**
9467549087	**PF0194**
4254A6	**PF0756**
4254A7	**PF0669**
4254A8	**PF0570**
4254C0	**PF0169**
4254C8	**PF0560**

OE	MAGNETI MARELLI
PIAGGIO	
449187	**PF0815**
0449187211	**PF0815**
449187503	**PF0815**
0449187504	**PF0815**
0449187511	**PF0815**
0449187503000	**PF0815**
PROTON	
MB699464	**PF0333**
MB699473	**PF0333**
MB928816	**PF0333**
MB928817	**PF0333**
MB950555	**PF0333**
MR389508	**PF0333**
PW891172	**PF0333**
RENAULT	
5001844747	**PF0527**
5001844748	**PF0478**
5001850859	**PF0527**
5001868606	**PF0650**
5001868608	**PF0573**
6025315867	**PF0816**
6025370398	**PF0816**
6025370851	**PF0589**
6025371279	**PF0371**
6025371650	**PF0432**
6025371662	**PF0371**
6025407835	**PF0816**
7485116333	**PF0650**
7701050914	**PF0371**
7701050918	**PF0370**
7701054771	**PF0371**
7701054772	**PF0370**
7701201669	**PF0203**
7701201773	**PF0203**
7701202050	**PF0817**
7701202213	**PF0378**
7701202227	**PF0378**
7701202289	**PF0203**
7701202516	**PF0203**
7701202517	**PF0378**
7701202540	**PF0203**
7701202710	**PF0378**
7701202891	**PF0378**

OE	MAGNETI MARELLI
RENAULT	
7701202894	**PF0203**
7701203775	**PF0203**
7701203842	**PF0385**
7701203842	**PF0378**
7701203968	**PF0817**
7701204220	**PF0817**
7701204626	**PF0790**
7701204664	**PF0197**
7701205277	**PF0378**
7701205294	**PF0544**
7701205512	**PF0514**
7701205513	**PF0514**
7701205995	**PF0514**
7701205996	**PF0513**
7701205996	**PF0200**
7701206044	**PF0380**
7701206288	**PF0817**
7701206343	**PF0348**
7701206343	**PF0144**
7701206369	**PF0544**
7701206379	**PF0377**
7701206598	**PF0384**
7701206599	**PF0383**
7701206609	**PF0349**
7701206727	**PF0366**
7701206747	**PF0571**
7701206763	**PF0365**
7701206784	**PF0348**
7701206784	**PF0144**
7701206811	**PF0514**
7701207034	**PF0197**
7701207066	**PF0204**
7701207166	**PF0544**
7701207184	**PF0380**
7701207187	**PF0613**
7701207339	**PF0366**
7701207484	**PF0432**
7701207615	**PF0571**
7701207672	**PF0380**
7701207673	**PF0600**
7701207695	**PF0432**
7701207968	**PF0349**
7701207977	**PF0571**
7701208122	**PF0380**
7701208142	**PF0200**

OE	MAGNETI MARELLI
RENAULT	
7701208182	**PF0383**
7701208183	**PF0381**
7701208213	**PF0348**
7701208218	**PF0590**
7701208265	**PF0204**
7701208416	**PF0348**
7701208421	**PF0348**
7701208422	**PF0347**
7701209077	**PF0817**
7701209100	**PF0381**
7701209101	**PF0572**
7701209117	**PF0513**
7701209380	**PF0377**
7701209444	**PF0380**
7701209639	**PF0204**
7701209670	**PF0381**
7701209672	**PF0572**
7701209697	**PF0380**
7701209808	**PF0381**
7701209809	**PF0383**
7701209864	**PF0661**
7701209869	**PF0660**
7701210110	**PF0661**
7701210130	**PF0204**
7701210174	**PF0662**
7711130036	**PF0203**
7711130071	**PF0203**
7711130086	**PF0381**
8201377565	**PF0717**
8671016705	**PF0572**
410600011R	**PF0670**
410600012R	**PF0384**
410600023R	**PF0683**
410600032R	**PF0671**
4106000QAD	**PF0366**
4106000QAD	**PF0366**
4106000QAE	**PF0371**
4106000QAK	**PF0513**
410600629R	**PF0672**
410600756R	**PF0572**
410601237R	**PF0381**
410601334R	**PF0661**
410602933R	**PF0671**
410603072R	**PF0683**
410603303R	**PF0590**

OE	MAGNETI MARELLI
RENAULT	
410603750R	**PF0661**
410604076R	**PF0347**
410604441R	**PF0377**
410605055R	**PF0672**
410605612R	**PF0717**
410605649R	**PF0662**
410605961R	**PF0429**
410607115R	**PF0429**
410607125R	**PF0377**
410607369R	**PF0671**
410607613R	**PF0383**
410607690R	**PF0384**
410607716R	**PF0571**
410608481R	**PF0347**
410608713R	**PF0380**
41060AX601	**PF0347**
41060AX625	**PF0347**
41060CC090	**PF0683**
41060EB325	**PF0683**
440600002R	**PF0243**
4406000QAE	**PF0365**
4406000QAF	**PF0370**
440600295R	**PF0348**
440601416R	**PF0382**
440601689R	**PF0243**
440603558R	**PF0382**
440603734R	**PF0382**
440603905R	**PF0429**
440604694R	**PF0382**
440605713R	**PF0348**
440605839R	**PF0348**
440606267R	**PF0660**
440607960R	**PF0348**
440608746R	**PF0672**
44060AV625	**PF0349**
44060AV725	**PF0349**
44060CB10J	**PF0473**
44060EG085	**PF0473**
4B0698451	**PF0131**
5580077K00	**PF0473**
D10601MF0A	**PF0683**
D10605X00A	**PF0683**
D1060AX60A	**PF0347**
D1060AX60F	**PF0347**
D1060AX61A	**PF0347**

OE	MAGNETI MARELLI
RENAULT	
D1060MB600	**PF0650**
D1060MB60A	**PF0650**
D40601BN0A	**PF0473**
D40601MB0A	**PF0473**
D40609N00B	**PF0473**
D4060CY025	**PF0473**
D4060MA000	**PF0573**
D4M60EG50C	**PF0473**
ROVER	
1020321	**PF0157**
GBP316AF	**PF0457**
GBP90315	**PF0484**
GBP90315AF	**PF0484**
GBP90315AF	**PF0484**
GBP90325AF	**PF0484**
GBP90329	**PF0274**
GBP90329AF	**PF0274**
GBP90331AF	**PF0462**
GBP90336AF	**PF0484**
GBP90339AF	**PF0462**
GBP90341AF	**PF0157**
SFP100260	**PF0484**
SFP100520	**PF0157**
SAAB	
425405	**PF0243**
542027	**PF0690**
542125	**PF0690**
1020321	**PF0157**
1360304	**PF0243**
1763677	**PF0243**
1777990	**PF0360**
4467072	**PF0359**
4837241	**PF0368**
4839924	**PF0386**
5055371	**PF0386**
5057336	**PF0368**
5058110	**PF0157**
5062203	**PF0386**
5062211	**PF0386**
5064795	**PF0386**
5232350	**PF0360**
9198688	**PF0360**
9201354	**PF0368**

OE	MAGNETI MARELLI
SAAB	
12759808	PF0360
12799240	PF0349
12802167	PF0612
12803551	PF0162
13237750	PF0723
13237751	PF0724
13237752	PF0363
13237765	PF0690
13237766	PF0690
13237768	PF0690
13343450	PF0690
13343451	PF0690
77363604	PF0162
90278133	PF0359
90297537	PF0359
90485136	PF0359
90485138	PF0368
90512037	PF0360
90540177	PF0368
90544439	PF0360
93166798	PF0162
93166941	PF0612
93172174	PF0162
93176121	PF0162
93176379	PF0612
93183729	PF0162
93186003	PF0162
93188112	PF0162
93191802	PF0360
93192749	PF0386
SEAT	
191698151	PF0393
321698151	PF0392
867698151	PF0393
191698151A	PF0395
191698151A	PF0393
191698151C	PF0392
191698151E	PF0395
191698151F	PF0395
191698151H	PF0392
191698151J	PF0392
191698151K	PF0392
1E0698451A	PF0144
1H0698151	PF0392

OE	MAGNETI MARELLI
SEAT	
1H0698151A	PF0390
1H0698151B	PF0391
1H0698451B	PF0144
1H0698451C	PF0144
1H0698451E	PF0144
1H0698451F	PF0144
1HM698151	PF0389
1HM698151A	PF0389
1J0615115	PF0134
1J0698151	PF0134
1J0698151A	PF0134
1J0698151B	PF0134
1J0698151C	PF0135
1J0698151D	PF0132
1J0698151E	PF0132
1J0698151F	PF0516
1J0698151G	PF0132
1J0698151H	PF0134
1J0698151J	PF0134
1J0698151M	PF0136
1J0698451C	PF0144
1J0698451F	PF0348
1K0698151	PF0135
1K0698151A	PF0132
1K0698151C	PF0135
1K0698151E	PF0135
1K0698151F	PF0132
1K0698151G	PF0132
1K0698451	PF0133
1K0698451	PF0601
1K0698451D	PF0601
1K0698451E	PF0133
1K0698451F	PF0601
1K0698451G	PF0133
1K0698451H	PF0601
1K0698451K	PF0601
1M2J2K021AA	PF0262
1ML698151	PF0554
321698151G	PF0392
357698151A	PF0806
357698151D	PF0806
357698151E	PF0389
357698151H	PF0806
3A0615151	PF0137
3A0698151	PF0137

OE	MAGNETI MARELLI
SEAT	
3A0698151A	PF0137
3C0698151	PF0135
3C0698151A	PF0135
3C0698151C	PF0135
3C0698451	PF0601
3C0698451A	PF0658
3C0698451C	PF0658
3C0698451E	PF0658
3C0698451F	PF0658
4B0698151	PF0142
4B0698151AB	PF0142
4B0698151E	PF0142
4B0698151J	PF0142
4B0698151M	PF0142
4B0698151N	PF0142
4B0698451	PF0131
4BO698151K	PF0142
4F0698451A	PF0601
4F0698451D	PF0601
533698151A	PF0806
5C0698151A	PF0134
5K0698151	PF0135
5K0698451	PF0441
5K0698451A	PF0441
5N0698151	PF0659
5N0698151A	PF0659
5N0698451	PF0658
5Q0698151B	PF0715
5Q0698151B	PF0716
5Q0698451C	PF0714
6H0698151	PF0388
6KL698151	PF0555
6N0698151	PF0388
6N0698151A	PF0389
6N0698151B	PF0389
6N0698151C	PF0388
6Q0698151	PF0134
6Q0698151C	PF0576
6Q0698451	PF0442
6Q0698451B	PF0442
6R0698151A	PF0134
7D0698451F	PF0258
7D0698451G	PF0258
7D069845B	PF0258
7M0698151	PF0260

OE	MAGNETI MARELLI
SEAT	
7M0698151A	PF0260
7M0698151B	PF0260
7M0698151B	PF0260
7M3698151	PF0261
7M3698151B	PF0262
7M3698451	PF0259
7M3698451B	PF0259
7M3698451C	PF0259
7M3698451D	PF0258
7M3698451E	PF0259
7M3698451F	PF0258
7N0698151	PF0659
8E0698151	PF0145
8E0698151A	PF0145
8E0698151F	PF0142
8E0698151J	PF0142
8E0698151N	PF0145
8E0698451A	PF0131
8E0698451E	PF0144
8E0698451F	PF0133
8E0698451J	PF0133
8J0698151	PF0135
8N0698151	PF0137
8N0698151	PF0137
8N0698151A	PF0136
8N0698151C	PF0136
8V0698151	PF0715
8V0698151	PF0716
8V0698151B	PF0715
8V0698151B	PF0716
8V0698151D	PF0715
8V0698151D	PF0716
8V0698451	PF0714
SKODA	
1E0698451A	PF0144
1H0698451B	PF0144
1H0698451C	PF0144
1H0698451E	PF0144
1H0698451F	PF0144
1J0615115	PF0134
1J0693151A	PF0515
1J0698151	PF0134
1J0698151A	PF0134
1J0698151B	PF0134

OE	MAGNETI MARELLI
SKODA	
1J0698151C	PF0135
1J0698151D	PF0132
1J0698151E	PF0132
1J0698151F	PF0516
1J0698151G	PF0132
1J0698151H	PF0134
1J0698151H	PF0134
1J0698151J	PF0134
1J0698151M	PF0136
1J0698451C	PF0144
1J0698451F	PF0348
1K0698151	PF0135
1K0698151A	PF0132
1K0698151B	PF0606
1K0698151C	PF0135
1K0698151E	PF0135
1K0698151F	PF0132
1K0698151G	PF0132
1K0698151G	PF0132
1K0698451	PF0133
1K0698451E	PF0133
1K0698451G	PF0133
3C0698151	PF0135
3C0698151C	PF0135
440605713R	PF0348
440605839R	PF0348
440607960R	PF0348
4B0698151	PF0142
4B0698151AB	PF0142
4B0698151E	PF0142
4B0698151J	PF0142
4B0698151J	PF0142
4B0698151N	PF0142
4B0698451	PF0131
4BO698151K	PF0142
5C0698151A	PF0134
5K0698151	PF0135
5K0698151	PF0135
5K0698451	PF0441
5K0698451A	PF0441
5Q0698151B	PF0715
5Q0698151B	PF0716
6H0698151	PF0388
6N0698151	PF0388
6N0698151C	PF0388

OE	MAGNETI MARELLI
SKODA	
6Q0698151	PF0134
6Q0698151A	PF0575
6Q0698151B	PF0396
6Q0698151C	PF0576
6Q0698451	PF0442
6Q0698451B	PF0442
6U0698151A	PF0397
6U0698151B	PF0397
6U0698151D	PF0397
6U0698151D	PF0397
6U0698151E	PF0397
6U698151E	PF0397
8E0698151F	PF0142
8E0698151J	PF0142
8E0698451A	PF0131
8E0698451A	PF0131
8E0698451E	PF0144
8E0698451E	PF0144
8E0698451F	PF0133
8E0698451J	PF0133
8J0698151	PF0135
8N0698151A	PF0136
8N0698151C	PF0136
8V0698151	PF0715
8V0698151	PF0716
8V0698151B	PF0715
8V0698151B	PF0716
8V0698151D	PF0715
8V0698151D	PF0716
SSANGYONG	
4813005011	PF0467
4813008260	PF0282
4813008260	PF0282
4813008BA0	PF0282
48130091A0	PF0282
48130341A0	PF0767
5810126A10	PF0282
5810126A30	PF0282
5810128A00	PF0468
5810128A20	PF0468
5810129A10	PF0468
5810129B00	PF0468
581012BA10	PF0767
581012DA20	PF0467

OE	MAGNETI MARELLI
SSANGYONG	
581012PA70	PF0767
581012WA00	PF0767
581012WA70	PF0767
5810133C00	PF0468
5810134A20	PF0467
5810139A40	PF0282
581013AA20	PF0282
581013CA80	PF0468
581014AA26	PF0282
58101M2A02	PF0468
583020AA10	PF0751
583022EA31	PF0751
583022HA51	PF0751
583022KA00	PF0751
583022KA10	PF0751
583023FA11	PF0751
583023KA31	PF0751
583023KA62	PF0751
583023LA10	PF0751
583223FA01	PF0751
SUBARU	
26296AE160	PF0399
26296AE190	PF0400
26296AE200	PF0400
26296AG040	PF0399
26296FE02	PF0399
26296FE081	PF0399
26296FG000	PF0399
26296FG010	PF0399
26296SA011	PF0399
26296SA030	PF0399
26296SC000	PF0399
26696AG010	PF0700
26696AG020	PF0700
26696AG030	PF0700
26696AG031	PF0700
26696AG051	PF0700

OE	MAGNETI MARELLI
SUZUKI	
5581083	PF0548
5581084E00	PF0450
5581084E01	PF0450
5520051810	PF0491
5520061880	PF0491
5520062840	PF0491
5520062860	PF0491
5520080000	PF0549
5520083840	PF0450
5520080E10	PF0549
5520060B11	PF0491
5520060B11	PF0494
5520065J01	PF0494
5520065J10	PF0494
5520065J11	PF0494
5520067D11	PF0494
5580068L00	PF0646
5580068L10	PF0646
5580077K00	PF0473
5580080J00	PF0462
5580080J01	PF0462
5580080J0200	PF0464
5581054G50	PF0490
5581054G61	PF0490
5581060J10	PF0470
5581061M00	PF0727
5581062J00	PF0353
5581062j20	PF0353
5581062J31	PF0353
5581062J50	PF0353
5581068L50	PF0818
5581075F10	PF0534
5581079J00	PF0241
5581079J10	PF0241
5581080G00	PF0470
5581080G01	PF0470
5581080G10	PF0470
5581080G12	PF0470
5581080J00	PF0695
5581080J51	PF0695
55810M68K00	PF0470
55810M79F10	PF0471
55810T79J00	PF0241
5881080G02	PF0470

OE	MAGNETI MARELLI
TATA	
5520051810	PF0491
5520061880	PF0491
5520062840	PF0491
5520062860	PF0491
5520060B11	PF0491
TOYOTA	
425327	PF0172
425328	PF0172
425474	PF0172
44633040	PF0406
94840677	PF0405
446502061	PF0408
446502130	PF0408
446502150	PF0408
446502150	PF0408
446502160	PF0664
446502190	PF0665
446502200	PF0664
446502210	PF0664
446502220	PF0663
446502270	PF0664
446502280	PF0665
446502370	PF0664
446502390	PF0708
446504030	PF0495
446504050	PF0495
446504060	PF0495
446505020	PF0532
446505020	PF0532
446505030	PF0532
446505040	PF0532
446505042	PF0532
446505050	PF0595
446505060	PF0532
446505070	PF0595
446505080	PF0595
446505090	PF0595
446505110	PF0532
446505130	PF0402
446505131	PF0402
446505140	PF0402
446505150	PF0402
446505170	PF0402
446505210	PF0402

OE	MAGNETI MARELLI
TOYOTA	
446505220	PF0402
446505221	PF0402
446505260	PF0781
446505270	PF0402
446505280	PF0402
446505300	PF0781
446506070	PF0641
446506100	PF0641
446506110	PF0641
446507010	PF0641
446512160	PF0509
446512592	PF0592
446512610	PF0663
446513020	PF0592
446513030	PF0493
446513050	PF0592
446513060	PF0493
446517050	PF0509
446517050	PF0509
446517101	PF0592
446517140	PF0592
446520120	PF0406
446520480	PF0493
446520510	PF0509
446521030	PF0493
446533440	PF0641
446533450	PF0641
446533470	PF0641
446533471	PF0641
446535040	PF0401
446535240	PF0401
446535250	PF0409
446535260	PF0401
446535290	PF0409
446542011	PF0406
446542012	PF0406
446542070	PF0577
446542071	PF0577
446542080	PF0577
446542130	PF0577
446542140	PF0632
446542150	PF0632
446542160	PF0663
446542180	PF0632
446542190	PF0632

OE	MAGNETI MARELLI
TOYOTA	
446544060	PF0597
446548150	PF0634
446548160	PF0634
446548170	PF0634
446552010	PF0592
446552011	PF0592
446552021	PF0592
446552060	PF0592
446552070	PF0533
446552130	PF0533
446552140	PF0533
446552200	PF0628
446552270	PF0627
446559020	PF0533
446560020	PF0635
446560030	PF0401
446560090	PF0705
446560270	PF0409
446574020	PF0784
446602010	PF0596
446602020	PF0407
446602040	PF0407
446602040	PF0407
446602060	PF0596
446602070	PF0407
446602070	PF0407
446602110	PF0407
446602160	PF0407
446602180	PF0666
446602181	PF0666
446602182	PF0666
446602190	PF0666
446605010	PF0403
446605020	PF0403
446605040	PF0686
446605041	PF0686
446606090	PF0633
446606100	PF0633
446612031	PF0292
446612040	PF0292
446612070	PF0292
446612070	PF0492
446612110	PF0492
446612110	PF0292
446612130	PF0629

OE	MAGNETI MARELLI
TOYOTA	
446620020	PF0492
446620090	PF0593
446620100	PF0492
446620100	PF0492
446620130	PF0596
446628040	PF0598
446628040	PF0598
446628050	PF0598
446628070	PF0598
446632010	PF0292
446633160	PF0633
446633180	PF0633
446642010	PF0578
446642020	PF0578
446642030	PF0578
446642040	PF0578
446642050	PF0578
446642060	PF0633
446647020	PF0630
446647020	PF0629
446647030	PF0630
446652010	PF0593
446652020	PF0593
446652030	PF0593
446652040	PF0593
446652050	PF0593
446652060	PF0593
446652120	PF0629
446652140	PF0629
446652150	PF0629
446660010	PF0705
446660020	PF0705
446660050	PF0705
446660080	PF0705
446660090	PF0705
446660140	PF0705
446676010	PF0630
449112230	PF0405
449112231	PF0405
449112250	PF0405
449112421	PF0405
449112590	PF0509
449112651	PF0406
449116040	PF0405
449117020	PF0405

OE	MAGNETI MARELLI
TOYOTA	
449117021	PF0405
449117170	PF0509
449117170	PF0509
449120170	PF0405
449120481	PF0405
449120890	PF0406
449133030	PF0406
449133080	PF0406
449187401	PF0333
449212042	PF0292
449212051	PF0292
449212052	PF0292
449212060	PF0292
449220010	PF0492
449220012	PF0492
449220020	PF0492
449220070	PF0492
449220080	PF0492
449260010	PF0705
449187401000	PF0333
044650D010	PF0410
044650D040	PF0410
044650D050	PF0404
044650D120	PF0404
044650F010	PF0665
044650H020	PF0172
044650J140	PF0495
044650K020	PF0495
044650K060	PF0495
044650K070	PF0495
044650K090	PF0409
044650K140	PF0495
044650W050	PF0592
044652B020	PF0509
044652B020	PF0509
044652B020	PF0509
044652B030	PF0493
044652B040	PF0493
044652B040	PF0493
04465B1010	PF0471
04465B1020	PF0471
04465B1050	PF0471
04465B1110	PF0471
04465B1380	PF0471
04465B4040	PF0333

OE	MAGNETI MARELLI
TOYOTA	
04465YZZAB	PF0406
04465YZZAF	PF0401
04465YZZBD	PF0401
04465YZZCN	PF0577
04465YZZCS	PF0577
04465YZZDB	PF0409
04465YZZEG	PF0641
044660D010	PF0631
04466YZZC5	PF0292
04466YZZC8	PF0705
04466YZZE8	PF0633
044912B010	PF0406
04605A458	PF0705
410604A00B	PF0471
44650H020	PF0172
VAUXHALL	
542027	PF0690
542039	PF0433
542040	PF0433
542115	PF0424
542120	PF0694
542125	PF0690
1604104	PF0690
1605010	PF0497
1605031	PF0368
1605079	PF0612
1605104	PF0690
1605137	PF0369
1605140	PF0433
1605164	PF0288
1605169	PF0694
1605176	PF0433
1605178	PF0424
1605180	PF0433
1605202	PF0363
1605366	PF0690
1605434	PF0724
1605496	PF0354
1605544	PF0354
1605586	PF0354
1605624	PF0723
1605670	PF0354
1605687	PF0368
1605688	PF0367

OE	MAGNETI MARELLI
VAUXHALL	
1605728	PF0359
1605795	PF0354
1605799	PF0368
1605851	PF0497
1605870	PF0354
1605877	PF0359
1605878	PF0367
1605924	PF0368
1605924	PF0368
1605972	PF0162
1605973	PF0349
1605979	PF0544
1605980	PF0366
1605982	PF0365
4402993	PF0366
4403467	PF0365
4404485	PF0366
4404585	PF0366
4404777	PF0544
4467072	PF0359
4501150	PF0544
4502797	PF0544
4837241	PF0368
5057336	PF0368
9110993	PF0366
9111467	PF0365
9112777	PF0544
9161450	PF0544
9162600	PF0544
9201354	PF0368
9949276	PF0214
12799240	PF0349
12802167	PF0612
12803551	PF0162
13237750	PF0723
13237751	PF0724
13237752	PF0363
13237765	PF0690
13237766	PF0690
13237768	PF0690
13300867	PF0433
13301207	PF0694
13301234	PF0424
13301234	PF0694
13319293	PF0433

OE	MAGNETI MARELLI
VAUXHALL	
13319294	PF0433
13343450	PF0690
13343451	PF0690
13374966	PF0694
13411380	PF0433
13411383	PF0433
13412272	PF0694
13412810	PF0424
90167765	PF0354
90273261	PF0367
90278133	PF0359
90279383	PF0367
90297537	PF0359
90398758	PF0354
90398759	PF0354
90443902	PF0354
90485136	PF0359
90485138	PF0368
90540177	PF0368
93166798	PF0162
93166941	PF0612
93172174	PF0162
93173182	PF0365
93176121	PF0162
93176379	PF0612
93183729	PF0162
93186003	PF0162
93188112	PF0162
95511378	PF0288
95515028	PF0288
95515197	PF0365
97039269	PF0497
VOLKSWAGEN	
8J0698151	PF0135
171698151G	PF0394
191698151A	PF0395
191698151A	PF0393
191698151B	PF0394
191698151C	PF0392
191698151E	PF0395
191698151F	PF0395
191698151G	PF0394
191698151H	PF0392
191698151J	PF0392

OE	MAGNETI MARELLI
VOLKSWAGEN	
191698151K	PF0392
191698151L	PF0394
1E0698451A	PF0144
1H0698151	PF0392
1H0698151A	PF0390
1H0698151B	PF0391
1H0698451B	PF0144
1H0698451C	PF0144
1H0698451E	PF0144
1H0698451F	PF0144
1HM698151	PF0389
1HM698151A	PF0389
1J0615115	PF0134
1J0693151A	PF0515
1J0698151	PF0134
1J0698151A	PF0134
1J0698151B	PF0134
1J0698151C	PF0135
1J0698151D	PF0132
1J0698151E	PF0132
1J0698151F	PF0516
1J0698151G	PF0132
1J0698151H	PF0134
1J0698151J	PF0134
1J0698151M	PF0136
1J0698451C	PF0144
1K0698151	PF0135
1K0698151A	PF0132
1K0698151B	PF0606
1K0698151C	PF0135
1K0698151E	PF0135
1K0698151F	PF0132
1K0698151G	PF0132
1K0698451	PF0133
1K0698451	PF0601
1K0698451A	PF0444
1K0698451D	PF0601
1K0698451E	PF0133
1K0698451F	PF0601
1K0698451G	PF0133
1K0698451H	PF0601
1K0698451K	PF0601
1M2J2K021AA	PF0262
2D0698151	PF0504
2D0698151A	PF0524

OE	MAGNETI MARELLI
VOLKSWAGEN	
2D0698151B	PF0524
2D0698151C	PF0321
2D0698151C	PF0504
2D0698451	PF0506
2D0698451A	PF0322
2D0698451B	PF0319
2D0698451C	PF0322
2D0698451D	PF0322
2DO698151	PF0321
2E0698151	PF0298
2E0698151A	PF0647
2E0698151B	PF0298
2E0698151C	PF0647
2E0698451	PF0300
2E0698451A	PF0299
2E0698451B	PF0299
2H0698151	PF0645
2H0698151A	PF0645
321698151B	PF0394
321698151G	PF0392
321698151H	PF0394
357698151A	PF0806
357698151D	PF0806
357698151E	PF0389
357698151H	PF0806
3A0615151	PF0137
3A0698151	PF0137
3A0698151A	PF0137
3C0698151	PF0135
3C0698151A	PF0135
3C0698151C	PF0135
3C0698451	PF0601
3C0698451A	PF0658
3C0698451C	PF0658
3C0698451E	PF0658
3C0698451F	PF0658
3D0698451	PF0603
3D0698451A	PF0603
4A0698151	PF0130
4A0698151A	PF0130
4A0698151C	PF0130
4B0698151	PF0142
4B0698151AB	PF0142
4B0698151AF	PF0143
4B0698151B	PF0143

OE	MAGNETI MARELLI
VOLKSWAGEN	
4B0698151E	**PF0142**
4B0698151H	**PF0143**
4B0698151J	**PF0142**
4B0698151K	**PF0143**
4B0698151M	**PF0142**
4B0698151N	**PF0142**
4B0698451	**PF0131**
4BO698151K	**PF0142**
4F0698151	**PF0143**
4F0698151A	**PF0605**
4F0698451A	**PF0601**
4F0698451D	**PF0601**
533698151A	**PF0806**
5C0698151A	**PF0134**
5K0698151	**PF0135**
5K0698451	**PF0441**
5K0698451A	**PF0441**
5N0698151	**PF0659**
5N0698151A	**PF0659**
5N0698451	**PF0658**
5Q0698151B	**PF0715**
5Q0698151B	**PF0716**
5Q0698151C	**PF0819**
5Q0698451	**PF0713**
5Q0698451C	**PF0714**
68003701AA	**PF0211**
68029263AA	**PF0211**
68029264AA	**PF0211**
68029887AA	**PF0210**
68029887AB	**PF0210**
68044761AA	**PF0210**
68044866AA	**PF0211**
68044866AC	**PF0211**
68053152AA	**PF0211**
68068762AA	**PF0211**
68093323AB	**PF0211**
6H0698151	**PF0388**
6N0698151	**PF0388**
6N0698151A	**PF0389**
6N0698151B	**PF0389**
6N0698151C	**PF0388**
6Q0698151	**PF0134**
6Q0698151B	**PF0396**
6Q0698151C	**PF0576**
6Q0698451	**PF0442**

OE	MAGNETI MARELLI
VOLKSWAGEN	
6Q0698451B	**PF0442**
6R0698151A	**PF0134**
701698151C	**PF0488**
701698151D	**PF0417**
701698151E	**PF0417**
701698151G	**PF0415**
701698151H	**PF0415**
701698151J	**PF0417**
7D0698151A	**PF0539**
7D0698151B	**PF0528**
7D0698151C	**PF0416**
7D0698151D	**PF0419**
7D0698151E	**PF0418**
7D0698151F	**PF0419**
7D0698151G	**PF0528**
7D0698151H	**PF0416**
7D0698451	**PF0529**
7D0698451A	**PF0542**
7D0698451A	**PF0586**
7D0698451B	**PF0541**
7D0698451B	**PF0420**
7D0698451D	**PF0586**
7D0698451E	**PF0420**
7D0698451E	**PF0586**
7D0698451F	**PF0258**
7D0698451G	**PF0258**
7D0698451J	**PF0586**
7D069845B	**PF0258**
7H0698151	**PF0413**
7H0698151A	**PF0414**
7H0698151B	**PF0413**
7H0698451	**PF0412**
7H0698451B	**PF0412**
7L6698151B	**PF0625**
7M0698151	**PF0260**
7M0698151A	**PF0260**
7M0698151B	**PF0260**
7M0698151B	**PF0260**
7M3698151	**PF0261**
7M3698151B	**PF0262**
7M3698451	**PF0259**
7M3698451B	**PF0259**
7M3698451C	**PF0259**
7M3698451D	**PF0258**
7M3698451E	**PF0259**

OE	MAGNETI MARELLI
VOLKSWAGEN	
7M3698451F	**PF0258**
7N0698151	**PF0659**
8D0615116B	**PF0146**
8D0615116D	**PF0146**
8D0698151A	**PF0146**
8D0698151C	**PF0146**
8D0698151F	**PF0146**
8E0698151	**PF0145**
8E0698151A	**PF0145**
8E0698151B	**PF0138**
8E0698151F	**PF0142**
8E0698151J	**PF0142**
8E0698151K	**PF0143**
8E0698151M	**PF0138**
8E0698151N	**PF0145**
8E0698451A	**PF0131**
8E0698451E	**PF0144**
8E0698451F	**PF0133**
8E0698451J	**PF0133**
8E0698451P	**PF0603**
8EA698451	**PF0444**
8J0698151C	**PF0657**
8N0698151	**PF0137**
8N0698151	**PF0137**
8N0698151A	**PF0136**
8N0698151C	**PF0136**
8V0698151	**PF0715**
8V0698151	**PF0716**
8V0698151B	**PF0715**
8V0698151B	**PF0716**
8V0698151D	**PF0715**
8V0698151D	**PF0716**
8V0698451	**PF0714**
8V0698451A	**PF0713**
8Z0698151	**PF0535**
VOLVO	
272370	**PF0421**
274285	**PF0422**
274330	**PF0681**
274331	**PF0679**
274512	**PF0681**
274528	**PF0681**
1001095	**PF0260**
1027703	**PF0260**

OE	MAGNETI MARELLI
VOLVO	
1031843	**PF0260**
1223682	**PF0244**
1233679	**PF0569**
1321517	**PF0244**
1324300	**PF0569**
1360254	**PF0431**
1360306	**PF0431**
1368558	**PF0608**
1379971	**PF0263**
1405511	**PF0797**
1423389	**PF0797**
1426143	**PF0264**
1426144	**PF0264**
1431178	**PF0797**
1436498	**PF0263**
1437761	**PF0263**
1439866	**PF0264**
1458247	**PF0263**
1459408	**PF0257**
1459450	**PF0264**
1464435	**PF0608**
1477803	**PF0257**
1503969	**PF0264**
1519528	**PF0244**
1566232	**PF0263**
1566234	**PF0257**
1682005	**PF0257**
1756395	**PF0257**

OE	MAGNETI MARELLI
VOLVO	
2723708	**PF0421**
2723997	**PF0543**
2724011	**PF0422**
3345670	**PF0334**
3345678	**PF0336**
8623862	**PF0543**
8634921	**PF0422**
30623253	**PF0335**
30623259	**PF0335**
30630555	**PF0335**
30630612	**PF0335**
30635328	**PF0611**
30645135	**PF0499**
30648385	**PF0422**
30648386	**PF0422**
30671574	**PF0264**
30683274	**PF0608**
30683412	**PF0499**
30683554	**PF0244**
30714791	**PF0608**
30736322	**PF0797**
30736610	**PF0431**
30742029	**PF0608**
30742030	**PF0244**
30742031	**PF0244**
30742491	**PF0264**
30742516	**PF0264**
30748957	**PF0499**

OE	MAGNETI MARELLI
VOLVO	
30769125	**PF0679**
30769186	**PF0336**
30769199	**PF0335**
30776712	**PF0422**
30793093	**PF0681**
30793107	**PF0263**
30793539	**PF0797**
30793540	**PF0257**
30793540	**PF0263**
30793857	**PF0797**
30793941	**PF0263**
30793941	**PF0263**
30794553	**PF0257**
30794554	**PF0264**
30794555	**PF0264**
30850976	**PF0335**
30850978	**PF0336**
31200229	**PF0797**
31201839	**PF0679**
31262503	**PF0422**
31262506	**PF0422**
31262705	**PF0679**
31341324	**PF0821**
31341331	**PF0820**
33456708	**PF0334**
33456781	**PF0336**

Tavole di comparazione IAM
IAM cross reference guide
Gegenüberstellung IAM
Table de correspondance IAM
Tabla de equivalencias IAM
Tabela de equivalências IAM
Πίνακας αντιστοιχιών IAM
Tabela porównawcza IAM
Кросс-таблица с IAM номерами
IAM çapraz referans tablosu

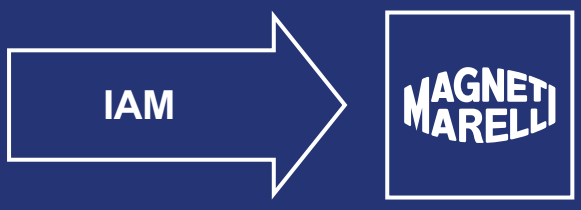

IAM	MAGNETI MARELLI
ATE	
13.0460-2704.2	**PF0289**
13.0460-2707.2	**PF0114**
13.0460-2708.2	**PF0309**
13.0460-2710.2	**PF0147**
13.0460-2713.2	**PF0148**
13.0460-2714.2	**PF0626**
13.0460-2715.2	**PF0241**
13.0460-2722.2	**PF0264**
13.0460-2723.2	**PF0257**
13.0460-2724.2	**PF0290**
13.0460-2725.2	**PF0619**
13.0460-2726.2	**PF0312**
13.0460-2732.2	**PF0313**
13.0460-2734.2	**PF0653**
13.0460-2734.2	**PF0654**
13.0460-2735.2	**PF0589**
13.0460-2738.2	**PF0193**
13.0460-2739.2	**PF0194**
13.0460-2741.2	**PF0661**
13.0460-2744.2	**PF0660**
13.0460-2745.2	**PF0171**
13.0460-2746.2	**PF0140**
13.0460-2748.2	**PF0141**
13.0460-2749.2	**PF0658**
13.0460-2754.2	**PF0363**
13.0460-2755.2	**PF0690**
13.0460-2761.2	**PF0754**
13.0460-2763.2	**PF0687**
13.0460-2774.2	**PF0594**
13.0460-2803.2	**PF0484**
13.0460-2809.2	**PF0226**
13.0460-2816.2	**PF0374**
13.0460-2817.2	**PF0202**
13.0460-2818.2	**PF0529**
13.0460-2821.2	**PF0389**
13.0460-2822.2	**PF0145**
13.0460-2825.2	**PF0167**
13.0460-2826.2	**PF0106**
13.0460-2827.2	**PF0111**
13.0460-2828.2	**PF0517**
13.0460-2829.2	**PF0786**
13.0460-2830.2	**PF0334**
13.0460-2831.2	**PF0522**
13.0460-2832.2	**PF0816**
13.0460-2833.2	**PF0301**

IAM	MAGNETI MARELLI
ATE	
13.0460-2834.2	**PF0203**
13.0460-2835.2	**PF0253**
13.0460-2837.2	**PF0138**
13.0460-2838.2	**PF0528**
13.0460-2839.2	**PF0416**
13.0460-2840.2	**PF0370**
13.0460-2841.2	**PF0541**
13.0460-2845.2	**PF0432**
13.0460-2850.2	**PF0183**
13.0460-2852.2	**PF0185**
13.0460-2853.2	**PF0335**
13.0460-2857.2	**PF0362**
13.0460-2857.2	**PF0551**
13.0460-2858.2	**PF0552**
13.0460-2859.2	**PF0259**
13.0460-2860.2	**PF0348**
13.0460-2862.2	**PF0199**
13.0460-2863.2	**PF0182**
13.0460-2867.2	**PF0109**
13.0460-2868.2	**PF0356**
13.0460-2870.2	**PF0371**
13.0460-2871.2	**PF0173**
13.0460-2872.2	**PF0258**
13.0460-2873.2	**PF0420**
13.0460-2874.2	**PF0586**
13.0460-2877.2	**PF0442**
13.0460-2878.2	**PF0291**
13.0460-2879.2	**PF0216**
13.0460-2880.2	**PF0601**
13.0460-2881.2	**PF0587**
13.0460-2882.2	**PF0412**
13.0460-2883.2	**PF0575**
13.0460-2884.2	**PF0576**
13.0460-2885.2	**PF0302**
13.0460-2887.2	**PF0133**
13.0460-2888.2	**PF0602**
13.0460-2890.2	**PF0603**
13.0460-2891.2	**PF0376**
13.0460-2892.2	**PF0615**
13.0460-2893.2	**PF0616**
13.0460-2895.2	**PF0377**
13.0460-2896.2	**PF0521**
13.0460-2897.2	**PF0336**
13.0460-2901.2	**PF0175**
13.0460-2923.2	**PF0305**

IAM	MAGNETI MARELLI
ATE	
13.0460-2937.2	**PF0144**
13.0460-2949.2	**PF0105**
13.0460-2951.2	**PF0783**
13.0460-2957.2	**PF0806**
13.0460-2962.2	**PF0116**
13.0460-2964.2	**PF0397**
13.0460-2968.2	**PF0119**
13.0460-2972.2	**PF0488**
13.0460-2973.2	**PF0415**
13.0460-2976.2	**PF0789**
13.0460-2977.2	**PF0184**
13.0460-2978.2	**PF0787**
13.0460-2979.2	**PF0122**
13.0460-2980.2	**PF0117**
13.0460-2982.2	**PF0417**
13.0460-2983.2	**PF0817**
13.0460-2984.2	**PF0131**
13.0460-3605.2	**PF0154**
13.0460-3800.2	**PF0366**
13.0460-3805.2	**PF0307**
13.0460-3806.2	**PF0365**
13.0460-3807.2	**PF0456**
13.0460-3809.2	**PF0236**
13.0460-3810.2	**PF0558**
13.0460-3811.2	**PF0228**
13.0460-3813.2	**PF0179**
13.0460-3814.2	**PF0600**
13.0460-3815.2	**PF0380**
13.0460-3818.2	**PF0123**
13.0460-3819.2	**PF0329**
13.0460-3819.2	**PF0617**
13.0460-3821.2	**PF0330**
13.0460-3823.2	**PF0790**
13.0460-3824.2	**PF0224**
13.0460-3825.2	**PF0225**
13.0460-3826.2	**PF0430**
13.0460-3827.2	**PF0221**
13.0460-3828.2	**PF0230**
13.0460-3829.2	**PF0172**
13.0460-3831.2	**PF0267**
13.0460-3832.2	**PF0300**
13.0460-3833.2	**PF0648**
13.0460-3834.2	**PF0272**
13.0460-3835.2	**PF0273**
13.0460-3836.2	**PF0177**

IAM	MAGNETI MARELLI
ATE	
13.0460-3838.2	**PF0453**
13.0460-3838.2	**PF0454**
13.0460-3838.2	**PF0455**
13.0460-3839.2	**PF0361**
13.0460-3840.2	**PF0561**
13.0460-3841.2	**PF0618**
13.0460-3842.2	**PF0299**
13.0460-3846.2	**PF0215**
13.0460-3847.2	**PF0373**
13.0460-3849.2	**PF0693**
13.0460-3853.2	**PF0686**
13.0460-3855.2	**PF0697**
13.0460-3860.2	**PF0645**
13.0460-3861.2	**PF0568**
13.0460-3862.2	**PF0446**
13.0460-3863.2	**PF0560**
13.0460-3864.2	**PF0562**
13.0460-3911.2	**PF0372**
13.0460-3935.2	**PF0246**
13.0460-3939.2	**PF0237**
13.0460-3940.2	**PF0212**
13.0460-3946.2	**PF0544**
13.0460-3949.2	**PF0223**
13.0460-3950.2	**PF0219**
13.0460-3950.2	**PF0220**
13.0460-3951.2	**PF0217**
13.0460-3951.2	**PF0218**
13.0460-3952.2	**PF0168**
13.0460-3953.2	**PF0385**
13.0460-3954.2	**PF0197**
13.0460-3955.2	**PF0378**
13.0460-3956.2	**PF0198**
13.0460-3957.2	**PF0192**
13.0460-3959.2	**PF0270**
13.0460-3960.2	**PF0268**
13.0460-3960.2	**PF0269**
13.0460-3965.2	**PF0247**
13.0460-3966.2	**PF0176**
13.0460-3974.2	**PF0200**
13.0460-3975.2	**PF0201**
13.0460-3976.2	**PF0357**
13.0460-3977.2	**PF0513**
13.0460-3977.2	**PF0514**
13.0460-3978.2	**PF0537**
13.0460-3978.2	**PF0538**

IAM	MAGNETI MARELLI
ATE	
13.0460-3979.2	**PF0398**
13.0460-3980.2	**PF0327**
13.0460-3982.2	**PF0126**
13.0460-3983.2	**PF0214**
13.0460-3984.2	**PF0563**
13.0460-3985.2	**PF0328**
13.0460-3987.2	**PF0266**
13.0460-3988.2	**PF0265**
13.0460-3990.2	**PF0319**
13.0460-3991.2	**PF0125**
13.0460-3992.2	**PF0271**
13.0460-3993.2	**PF0556**
13.0460-3994.2	**PF0170**
13.0460-3994.2	**PF0174**
13.0460-3995.2	**PF0450**
13.0460-3996.2	**PF0565**
13.0460-3997.2	**PF0181**
13.0460-3998.2	**PF0564**
13.0460-3999.2	**PF0318**
13.0460-4014.2	**PF0375**
13.0460-4030.2	**PF0304**
13.0460-4034.2	**PF0306**
13.0460-4039.2	**PF0367**
13.0460-4040.2	**PF0368**
13.0460-4041.2	**PF0165**
13.0460-4043.2	**PF0359**
13.0460-4047.2	**PF0303**
13.0460-4060.2	**PF0297**
13.0460-4064.2	**PF0311**
13.0460-4065.2	**PF0553**
13.0460-4066.2	**PF0166**
13.0460-4069.2	**PF0584**
13.0460-4401.2	**PF0325**
13.0460-4801.2	**PF0554**
13.0460-4803.2	**PF0110**
13.0460-4804.2	**PF0499**
13.0460-4805.2	**PF0590**
13.0460-4807.2	**PF0189**
13.0460-4810.2	**PF0190**
13.0460-4812.2	**PF0191**
13.0460-4817.2	**PF0317**
13.0460-4823.2	**PF0284**
13.0460-4826.2	**PF0298**
13.0460-4827.2	**PF0647**
13.0460-4830.2	**PF0649**

IAM	MAGNETI MARELLI
ATE	
13.0460-4847.2	**PF0478**
13.0460-4853.2	**PF0127**
13.0460-4862.2	**PF0474**
13.0460-4913.2	**PF0475**
13.0460-4914.2	**PF0530**
13.0460-4919.2	**PF0476**
13.0460-4921.2	**PF0180**
13.0460-4964.2	**PF0555**
13.0460-4966.2	**PF0524**
13.0460-4968.2	**PF0107**
13.0460-4971.1	**PF0113**
13.0460-4972.2	**PF0498**
13.0460-4975.2	**PF0480**
13.0460-4975.2	**PF0481**
13.0460-4978.2	**PF0186**
13.0460-4979.2	**PF0187**
13.0460-4980.2	**PF0188**
13.0460-4984.2	**PF0320**
13.0460-4989.2	**PF0526**
13.0460-4990.2	**PF0585**
13.0460-4991.2	**PF0121**
13.0460-4995.2	**PF0500**
13.0460-4996.2	**PF0434**
13.0460-5405.2	**PF0155**
13.0460-5409.2	**PF0807**
13.0460-5600.2	**PF0725**
13.0460-5602.2	**PF0664**
13.0460-5603.2	**PF0665**
13.0460-5604.2	**PF0666**
13.0460-5609.2	**PF0494**
13.0460-5610.2	**PF0699**
13.0460-5611.2	**PF0723**
13.0460-5612.2	**PF0724**
13.0460-5617.2	**PF0628**
13.0460-5620.2	**PF0707**
13.0460-5631.2	**PF0337**
13.0460-5634.2	**PF0634**
13.0460-5645.2	**PF0749**
13.0460-5700.2	**PF0353**
13.0460-5709.2	**PF0791**
13.0460-5711.2	**PF0461**
13.0460-5714.2	**PF0691**
13.0460-5731.2	**PF0460**
13.0460-5735.2	**PF0285**
13.0460-5742.2	**PF0281**

IAM	MAGNETI MARELLI
ATE	
13.0460-5744.2	PF0705
13.0460-5745.2	PF0635
13.0460-5747.2	PF0409
13.0460-5752.2	PF0351
13.0460-5753.2	PF0799
13.0460-5756.2	PF0620
13.0460-5757.2	PF0621
13.0460-5760.2	PF0338
13.0460-5764.2	PF0641
13.0460-5765.2	PF0633
13.0460-5766.2	PF0632
13.0460-5768.2	PF0627
13.0460-5769.2	PF0629
13.0460-5770.2	PF0637
13.0460-5772.2	PF0447
13.0460-5773.2	PF0448
13.0460-5775.2	PF0745
13.0460-5776.2	PF0280
13.0460-5777.2	PF0767
13.0460-5778.2	PF0683
13.0460-5779.2	PF0698
13.0460-5780.2	PF0701
13.0460-5786.2	PF0751
13.0460-5787.2	PF0399
13.0460-5792.2	PF0279
13.0460-5794.2	PF0684
13.0460-5795.2	PF0439
13.0460-5800.2	PF0410
13.0460-5801.2	PF0347
13.0460-5802.2	PF0293
13.0460-5803.2	PF0800
13.0460-5804.2	PF0294
13.0460-5807.2	PF0344
13.0460-5809.2	PF0532
13.0460-5810.2	PF0592
13.0460-5811.2	PF0533
13.0460-5812.2	PF0593
13.0460-5813.2	PF0402
13.0460-5814.2	PF0403
13.0460-5815.2	PF0408
13.0460-5817.2	PF0493
13.0460-5819.2	PF0407
13.0460-5820.2	PF0275
13.0460-5821.2	PF0295
13.0460-5822.2	PF0465

IAM	MAGNETI MARELLI
ATE	
13.0460-5825.2	PF0567
13.0460-5829.2	PF0655
13.0460-5831.2	PF0466
13.0460-5832.2	PF0282
13.0460-5833.2	PF0278
13.0460-5835.2	PF0292
13.0460-5836.2	PF0534
13.0460-5837.2	PF0549
13.0460-5840.2	PF0492
13.0460-5841.2	PF0519
13.0460-5843.2	PF0350
13.0460-5844.2	PF0595
13.0460-5845.2	PF0509
13.0460-5846.2	PF0597
13.0460-5847.2	PF0598
13.0460-5848.2	PF0577
13.0460-5849.2	PF0578
13.0460-5852.2	PF0209
13.0460-5853.2	PF0342
13.0460-5855.2	PF0340
13.0460-5859.2	PF0206
13.0460-5863.2	PF0207
13.0460-5868.2	PF0458
13.0460-5869.2	PF0596
13.0460-5872.2	PF0459
13.0460-5873.2	PF0277
13.0460-5875.2	PF0469
13.0460-5878.2	PF0702
13.0460-5886.2	PF0472
13.0460-5887.2	PF0471
13.0460-5888.2	PF0490
13.0460-5890.2	PF0810
13.0460-5899.2	PF0163
13.0460-5923.2	PF0287
13.0460-5925.2	PF0205
13.0460-5927.2	PF0497
13.0460-5929.2	PF0462
13.0460-5933.2	PF0467
13.0460-5933.2	PF0468
13.0460-5943.2	PF0276
13.0460-5944.2	PF0286
13.0460-5951.2	PF0406
13.0460-5953.2	PF0333
13.0460-5956.2	PF0346
13.0460-5958.2	PF0339

IAM	MAGNETI MARELLI
ATE	
13.0460-5959.2	PF0352
13.0460-5976.2	PF0405
13.0460-5981.2	PF0341
13.0460-5982.2	PF0274
13.0460-5985.2	PF0491
13.0460-5986.2	PF0345
13.0460-5987.2	PF0520
13.0460-5988.2	PF0343
13.0460-5988.2	PF0518
13.0460-5992.2	PF0401
13.0460-5994.2	PF0510
13.0460-5996.2	PF0164
13.0460-5998.2	PF0457
13.0460-7030.2	PF0395
13.0460-7032.2	PF0392
13.0460-7033.2	PF0394
13.0460-7040.2	PF0249
13.0460-7048.2	PF0354
13.0460-7050.2	PF0130
13.0460-7051.2	PF0208
13.0460-7057.2	PF0245
13.0460-7058.2	PF0195
13.0460-7059.2	PF0393
13.0460-7061.2	PF0788
13.0460-7063.2	PF0229
13.0460-7064.2	PF0222
13.0460-7065.2	PF0102
13.0460-7067.2	PF0104
13.0460-7068.2	PF0782
13.0460-7069.2	PF0101
13.0460-7071.2	PF0248
13.0460-7072.2	PF0390
13.0460-7073.2	PF0250
13.0460-7076.2	PF0260
13.0460-7077.2	PF0146
13.0460-7078.2	PF0579
13.0460-7079.2	PF0152
13.0460-7081.2	PF0137
13.0460-7082.2	PF0504
13.0460-7083.2	PF0322
13.0460-7084.2	PF0505
13.0460-7085.2	PF0326
13.0460-7086.2	PF0310
13.0460-7087.2	PF0315
13.0460-7088.2	PF0196

IAM	MAGNETI MARELLI
ATE	
13.0460-7089.2	**PF0159**
13.0460-7090.2	**PF0158**
13.0460-7091.2	**PF0360**
13.0460-7100.2	**PF0388**
13.0460-7101.2	**PF0391**
13.0460-7102.2	**PF0418**
13.0460-7103.2	**PF0515**
13.0460-7105.2	**PF0112**
13.0460-7107.2	**PF0482**
13.0460-7108.2	**PF0232**
13.0460-7110.2	**PF0143**
13.0460-7111.2	**PF0134**
13.0460-7112.2	**PF0118**
13.0460-7113.2	**PF0234**
13.0460-7114.2	**PF0239**
13.0460-7115.2	**PF0355**
13.0460-7116.2	**PF0523**
13.0460-7117.2	**PF0132**
13.0460-7117.2	**PF0516**
13.0460-7121.2	**PF0255**
13.0460-7122.2	**PF0136**
13.0460-7123.2	**PF0539**
13.0460-7124.2	**PF0419**
13.0460-7125.2	**PF0240**
13.0460-7126.2	**PF0233**
13.0460-7127.2	**PF0235**
13.0460-7133.2	**PF0238**
13.0460-7135.2	**PF0543**
13.0460-7139.2	**PF0108**
13.0460-7140.2	**PF0103**
13.0460-7141.2	**PF0227**
13.0460-7142.2	**PF0252**
13.0460-7143.2	**PF0261**
13.0460-7145.2	**PF0422**
13.0460-7148.2	**PF0251**
13.0460-7154.2	**PF0262**
13.0460-7155.2	**PF0153**
13.0460-7157.2	**PF0384**
13.0460-7158.2	**PF0383**
13.0460-7159.2	**PF0571**
13.0460-7160.2	**PF0349**
13.0460-7161.2	**PF0332**
13.0460-7162.2	**PF0331**
13.0460-7164.2	**PF0396**
13.0460-7166.2	**PF0607**

IAM	MAGNETI MARELLI
ATE	
13.0460-7167.2	**PF0151**
13.0460-7169.2	**PF0737**
13.0460-7171.2	**PF0316**
13.0460-7172.2	**PF0162**
13.0460-7173.2	**PF0386**
13.0460-7174.2	**PF0161**
13.0460-7175.2	**PF0569**
13.0460-7176.2	**PF0160**
13.0460-7177.2	**PF0411**
13.0460-7178.2	**PF0535**
13.0460-7179.2	**PF0364**
13.0460-7186.2	**PF0256**
13.0460-7188.2	**PF0679**
13.0460-7189.2	**PF0681**
13.0460-7191.2	**PF0625**
13.0460-7193.2	**PF0244**
13.0460-7195.2	**PF0431**
13.0460-7196.2	**PF0321**
13.0460-7199.2	**PF0612**
13.0460-7200.2	**PF0606**
13.0460-7201.2	**PF0605**
13.0460-7201.2	**PF0609**
13.0460-7202.2	**PF0178**
13.0460-7204.2	**PF0608**
13.0460-7211.2	**PF0115**
13.0460-7212.2	**PF0588**
13.0460-7214.2	**PF0631**
13.0460-7215.2	**PF0622**
13.0460-7216.2	**PF0507**
13.0460-7217.2	**PF0624**
13.0460-7219.2	**PF0640**
13.0460-7220.2	**PF0639**
13.0460-7221.2	**PF0381**
13.0460-7222.2	**PF0572**
13.0460-7224.2	**PF0580**
13.0460-7225.2	**PF0486**
13.0460-7227.2	**PF0610**
13.0460-7228.2	**PF0263**
13.0460-7229.2	**PF0169**
13.0460-7230.2	**PF0644**
13.0460-7231.2	**PF0760**
13.0460-7232.2	**PF0487**
13.0460-7236.2	**PF0413**
13.0460-7237.2	**PF0583**
13.0460-7238.2	**PF0150**

IAM	MAGNETI MARELLI
ATE	
13.0460-7240.2	**PF0414**
13.0460-7242.2	**PF0659**
13.0460-7243.2	**PF0797**
13.0460-7246.2	**PF0242**
13.0460-7249.2	**PF0670**
13.0460-7250.2	**PF0671**
13.0460-7252.2	**PF0668**
13.0460-7253.2	**PF0243**
13.0460-7256.2	**PF0139**
13.0460-7257.2	**PF0314**
13.0460-7262.2	**PF0694**
13.0460-7263.2	**PF0424**
13.0460-7264.2	**PF0433**
13.0460-7265.2	**PF0288**
13.0460-7266.2	**PF0429**
13.0460-7268.2	**PF0508**
13.0460-7268.2	**PF0582**
13.0460-7269.2	**PF0128**
13.0460-7273.2	**PF0426**
13.0460-7276.2	**PF0756**
13.0460-7278.2	**PF0570**
13.0460-7284.2	**PF0706**
13.0460-7904.2	**PF0283**
13.0460-7906.2	**PF0547**
13.0460-7907.2	**PF0546**
13.0460-7909.2	**PF0324**
13.0460-8003.2	**PF0785**
13.0460-8013.2	**PF0211**
13.0463-7213.2	**PF0404**
13.0470-2712.2	**PF0308**
13.0470-7184.2	**PF0135**
13.0470-7226.2	**PF0657**
13.0470-7277.2	**PF0669**
16.0460-5767.2	**PF0663**
27.0460-1602.2	**PF0815**
BOSCH	
986424026	**PF0266**
986424027	**PF0788**
986424030	**PF0789**
986424031	**PF0184**
986424033	**PF0787**
986424099	**PF0815**
986424134	**PF0635**
986424167	**PF0117**

IAM	MAGNETI MARELLI
BOSCH	
986424175	PF0226
986424184	PF0119
986424185	PF0485
986424204	PF0352
986424214	PF0484
986424215	PF0468
986424218	PF0504
986424219	PF0505
986424223	PF0202
986424227	PF0374
986424233	PF0315
986424240	PF0475
986424246	PF0222
986424248	PF0101
986424268	PF0401
986424313	PF0705
986424347	PF0390
986424360	PF0360
986424364	PF0134
986424367	PF0497
986424369	PF0343
986424370	PF0520
986424371	PF0334
986424373	PF0397
986424375	PF0529
986424376	PF0167
986424377	PF0496
986424379	PF0217
986424379	PF0218
986424400	PF0159
986424414	PF0786
986424415	PF0192
986424416	PF0250
986424427	PF0336
986424449	PF0391
986424451	PF0816
986424452	PF0196
986424453	PF0200
986424455	PF0513
986424456	PF0355
986424457	PF0523
986424458	PF0229
986424459	PF0158
986424460	PF0137
986424462	PF0248

IAM	MAGNETI MARELLI
BOSCH	
986424463	PF0322
986424469	PF0301
986424470	PF0517
986424471	PF0398
986424478	PF0357
986424481	PF0146
986424482	PF0143
986424483	PF0155
986424488	PF0386
986424490	PF0344
986424493	PF0269
986424502	PF0411
986424507	PF0112
986424510	PF0104
986424512	PF0164
986424516	PF0319
986424518	PF0312
986424523	PF0339
986424527	PF0362
986424528	PF0552
986424529	PF0537
986424530	PF0107
986424531	PF0589
986424535	PF0533
986424537	PF0419
986424539	PF0543
986424540	PF0422
986424541	PF0335
986424543	PF0234
986424544	PF0239
986424545	PF0106
986424549	PF0548
986424554	PF0227
986424554	PF0233
986424556	PF0183
986424558	PF0252
986424559	PF0259
986424560	PF0532
986424571	PF0170
986424572	PF0810
986424575	PF0800
986424576	PF0118
986424577	PF0113
986424578	PF0103
986424580	PF0180

IAM	MAGNETI MARELLI
BOSCH	
986424581	PF0564
986424582	PF0181
986424583	PF0199
986424587	PF0785
986424593	PF0102
986424595	PF0124
986424595	PF0563
986424596	PF0214
986424597	PF0126
986424598	PF0565
986424610	PF0293
986424614	PF0366
986424616	PF0571
986424617	PF0349
986424618	PF0383
986424619	PF0381
986424626	PF0534
986424630	PF0593
986424632	PF0536
986424635	PF0587
986424636	PF0371
986424644	PF0247
986424645	PF0251
986424646	PF0356
986424652	PF0332
986424654	PF0574
986424657	PF0271
986424662	PF0542
986424663	PF0567
986424667	PF0154
986424667	PF0157
986424670	PF0279
986424671	PF0613
986424672	PF0528
986424675	PF0365
986424677	PF0162
986424679	PF0289
986424680	PF0109
986424687	PF0580
986424691	PF0556
986424694	PF0296
986424695	PF0471
986424697	PF0209
986424699	PF0316
986424701	PF0256

IAM	MAGNETI MARELLI
BOSCH	
986424705	PF0585
986424707	PF0364
986424709	PF0342
986424716	PF0338
986424717	PF0340
986424719	PF0577
986424722	PF0702
986424723	PF0396
986424728	PF0278
986424729	PF0282
986424734	PF0519
986424735	PF0408
986424738	PF0498
986424738	PF0500
986424748	PF0420
986424749	PF0283
986424750	PF0434
986424756	PF0216
986424761	PF0597
986424762	PF0598
986424766	PF0161
986424767	PF0153
986424768	PF0476
986424769	PF0187
986424774	PF0600
986424775	PF0114
986424780	PF0539
986424785	PF0380
986424786	PF0236
986424787	PF0318
986424788	PF0410
986424789	PF0182
986424790	PF0407
986424791	PF0566
986424792	PF0291
986424794	PF0244
986424795	PF0347
986424797	PF0135
986424798	PF0403
986424799	PF0509
986424801	PF0538
986424803	PF0592
986424804	PF0549
986424808	PF0493
986424810	PF0469

IAM	MAGNETI MARELLI
BOSCH	
986424811	PF0281
986424813	PF0442
986424814	PF0285
986424815	PF0277
986424817	PF0294
986424818	PF0163
986424825	PF0178
986424829	PF0575
986424830	PF0584
986424832	PF0324
986424832	PF0525
986424833	PF0526
986460002	PF0328
986460937	PF0130
986460938	PF0208
986460941	PF0488
986460942	PF0122
986460943	PF0806
986460949	PF0246
986460955	PF0359
986460963	PF0268
986460965	PF0303
986460968	PF0223
986460969	PF0245
986460970	PF0197
986460983	PF0168
986460986	PF0807
986460993	PF0345
986461006	PF0462
986461106	PF0393
986461119	PF0219
986461119	PF0220
986461122	PF0346
986461123	PF0406
986461130	PF0165
986461131	PF0457
986461136	PF0492
986461141	PF0286
986461142	PF0274
986461753	PF0417
986461757	PF0198
986461759	PF0275
986461764	PF0195
986461765	PF0817
986461768	PF0341

IAM	MAGNETI MARELLI
BOSCH	
986461769	PF0131
986466346	PF0378
986466683	PF0144
986466871	PF0306
986466874	PF0304
986467411	PF0175
986467720	PF0203
986467760	PF0212
986467841	PF0325
986468380	PF0105
986468701	PF0405
986468871	PF0394
986468873	PF0392
986468890	PF0395
986469070	PF0249
986469390	PF0354
986469860	PF0372
986490150	PF0367
986490260	PF0307
986490500	PF0368
986490550	PF0305
986491030	PF0783
986491900	PF0205
986493340	PF0491
986494000	PF0326
986494003	PF0260
986494005	PF0388
986494006	PF0152
986494007	PF0507
986494008	PF0418
986494010	PF0389
986494011	PF0253
986494012	PF0320
986494016	PF0311
986494018	PF0136
986494019	PF0132
986494019	PF0516
986494020	PF0111
986494021	PF0145
986494022	PF0553
986494023	PF0308
986494024	PF0377
986494027	PF0174
986494030	PF0125
986494032	PF0569

IAM	MAGNETI MARELLI
BOSCH	
986494033	PF0572
986494034	PF0384
986494035	PF0261
986494036	PF0151
986494038	PF0176
986494039	PF0201
986494040	PF0370
986494041	PF0416
986494042	PF0138
986494044	PF0369
986494046	PF0265
986494048	PF0186
986494049	PF0188
986494050	PF0142
986494051	PF0586
986494053	PF0601
986494054	PF0402
986494055	PF0375
986494059	PF0116
986494061	PF0149
986494062	PF0133
986494063	PF0331
986494064	PF0280
986494065	PF0172
986494067	PF0121
986494068	PF0224
986494069	PF0110
986494070	PF0123
986494071	PF0115
986494072	PF0230
986494073	PF0588
986494074	PF0228
986494076	PF0267
986494077	PF0608
986494078	PF0465
986494079	PF0295
986494081	PF0329
986494081	PF0617
986494082	PF0330
986494085	PF0309
986494087	PF0302
986494090	PF0473
986494092	PF0361
986494095	PF0616
986494096	PF0622

IAM	MAGNETI MARELLI
BOSCH	
986494097	PF0376
986494098	PF0615
986494099	PF0179
986494101	PF0404
986494102	PF0681
986494103	PF0606
986494104	PF0609
986494105	PF0576
986494107	PF0413
986494108	PF0412
986494109	PF0190
986494110	PF0191
986494111	PF0189
986494113	PF0430
986494114	PF0215
986494115	PF0454
986494115	PF0455
986494118	PF0160
986494119	PF0603
986494120	PF0147
986494121	PF0298
986494122	PF0299
986494123	PF0300
986494124	PF0225
986494127	PF0431
986494129	PF0241
986494130	PF0631
986494132	PF0558
986494134	PF0791
986494135	PF0691
986494136	PF0620
986494138	PF0472
986494139	PF0698
986494140	PF0701
986494143	PF0447
986494144	PF0458
986494145	PF0745
986494153	PF0409
986494154	PF0633
986494155	PF0655
986494157	PF0561
986494160	PF0353
986494161	PF0313
986494162	PF0314
986494165	PF0639

IAM	MAGNETI MARELLI
BOSCH	
986494167	PF0317
986494168	PF0619
986494169	PF0263
986494170	PF0272
986494171	PF0273
986494173	PF0206
986494174	PF0632
986494174	PF0636
986494182	PF0666
986494183	PF0173
986494184	PF0310
986494186	PF0579
986494187	PF0665
986494188	PF0297
986494191	PF0760
986494192	PF0194
986494194	PF0647
986494195	PF0254
986494196	PF0627
986494197	PF0545
986494198	PF0628
986494199	PF0177
986494221	PF0699
986494227	PF0767
986494228	PF0127
986494233	PF0463
986494234	PF0653
986494235	PF0169
986494236	PF0648
986494238	PF0490
986494240	PF0663
986494241	PF0494
986494242	PF0626
986494244	PF0351
986494247	PF0257
986494248	PF0264
986494249	PF0621
986494253	PF0638
986494256	PF0640
986494257	PF0530
986494259	PF0140
986494260	PF0664
986494263	PF0654
986494266	PF0480
986494266	PF0481

IAM	MAGNETI MARELLI
BOSCH	
986494268	PF0337
986494269	PF0623
986494271	PF0605
986494272	PF0624
986494273	PF0478
986494275	PF0724
986494277	PF0696
986494279	PF0723
986494280	PF0612
986494283	PF0607
986494284	PF0255
986494287	PF0270
986494288	PF0544
986494294	PF0737
986494295	PF0683
986494297	PF0690
986494298	PF0363
986494299	PF0276
986494303	PF0602
986494315	PF0399
986494316	PF0637
986494320	PF0684
986494323	PF0439
986494324	PF0644
986494328	PF0629
986494331	PF0660
986494332	PF0661
986494333	PF0784
986494334	PF0650
986494337	PF0695
986494338	PF0703
986494339	PF0738
986494343	PF0207
986494344	PF0658
986494350	PF0578
986494354	PF0150
986494358	PF0461
986494367	PF0554
986494371	PF0668
986494372	PF0659
986494373	PF0400
986494379	PF0799
986494381	PF0670
986494383	PF0706
986494390	PF0262

IAM	MAGNETI MARELLI
BOSCH	
986494393	PF0555
986494394	PF0466
986494395	PF0502
986494397	PF0333
986494399	PF0348
986494401	PF0672
986494402	PF0423
986494403	PF0686
986494416	PF0441
986494422	PF0725
986494430	PF0641
986494434	PF0424
986494435	PF0433
986494437	PF0754
986494438	PF0697
986494441	PF0429
986494443	PF0694
986494444	PF0700
986494446	PF0675
986494451	PF0327
986494452	PF0382
986494453	PF0288
986494454	PF0693
986494458	PF0450
986494460	PF0284
986494461	PF0148
986494463	PF0427
986494464	PF0562
986494465	PF0128
986494466	PF0425
986494488	PF0673
986494496	PF0210
986494506	PF0522
986494527	PF0756
986494529	PF0258
986494536	PF0568
986494556	PF0671
986494557	PF0751
986494567	PF0444
986494573	PF0594
986494658	PF0713
986494659	PF0714
986494661	PF0717
986495169	PF0634

IAM	MAGNETI MARELLI
BREMBO	
P 06 013	PF0154
P 06 016	PF0485
P 06 020	PF0152
P 06 021	PF0579
P 06 022	PF0159
P 06 023	PF0158
P 06 024	PF0155
P 06 025	PF0157
P 06 026	PF0737
P 06 030	PF0332
P 06 031	PF0151
P 06 032	PF0331
P 06 033	PF0161
P 06 034	PF0147
P 06 035	PF0622
P 06 036	PF0156
P 06 037	PF0148
P 06 038	PF0149
P 06 039	PF0486
P 06 040	PF0507
P 06 043	PF0153
P 06 045	PF0583
P 06 049	PF0760
P 06 051	PF0619
P 06 052	PF0626
P 06 053	PF0738
P 06 054	PF0581
P 06 055	PF0150
P 06 056	PF0487
P 06 060	PF0508
P 06 074	PF0582
P 06 080	PF0623
P 10 006	PF0206
P 10 011	PF0369
P 10 013	PF0358
P 11 008	PF0785
P 11 021	PF0210
P 11 025	PF0211
P 11 031	PF0428
P 15 002	PF0207
P 15 006	PF0164
P 15 011	PF0468
P 16 003	PF0815
P 16 008	PF0209
P 16 011	PF0791

IAM	MAGNETI MARELLI
BREMBO	
P 16 013	**PF0818**
P 18 025	**PF0766**
P 23 013	**PF0212**
P 23 017	**PF0105**
P 23 021	**PF0237**
P 23 022	**PF0175**
P 23 026	**PF0106**
P 23 026	**PF0783**
P 23 040	**PF0807**
P 23 041	**PF0117**
P 23 043	**PF0122**
P 23 047	**PF0226**
P 23 048	**PF0119**
P 23 054	**PF0223**
P 23 055	**PF0229**
P 23 056	**PF0234**
P 23 057	**PF0222**
P 23 058	**PF0103**
P 23 060	**PF0217**
P 23 060	**PF0218**
P 23 061	**PF0787**
P 23 062	**PF0788**
P 23 064	**PF0216**
P 23 065	**PF0109**
P 23 067	**PF0111**
P 23 068	**PF0789**
P 23 069	**PF0184**
P 23 070	**PF0102**
P 23 071	**PF0104**
P 23 072	**PF0192**
P 23 073	**PF0239**
P 23 073	**PF0240**
P 23 074	**PF0107**
P 23 075	**PF0112**
P 23 076	**PF0232**
P 23 077	**PF0101**
P 23 078	**PF0113**
P 23 079	**PF0233**
P 23 080	**PF0125**
P 23 081	**PF0238**
P 23 082	**PF0498**
P 23 083	**PF0183**
P 23 084	**PF0185**
P 23 085	**PF0126**
P 23 086	**PF0124**

IAM	MAGNETI MARELLI
BREMBO	
P 23 086	**PF0563**
P 23 087	**PF0214**
P 23 088	**PF0289**
P 23 089	**PF0114**
P 23 090	**PF0182**
P 23 091	**PF0186**
P 23 092	**PF0187**
P 23 093	**PF0188**
P 23 094	**PF0291**
P 23 096	**PF0219**
P 23 096	**PF0220**
P 23 097	**PF0236**
P 23 098	**PF0121**
P 23 099	**PF0558**
P 23 100	**PF0224**
P 23 101	**PF0225**
P 23 103	**PF0115**
P 23 104	**PF0230**
P 23 105	**PF0241**
P 23 107	**PF0215**
P 23 108	**PF0430**
P 23 113	**PF0782**
P 23 114	**PF0108**
P 23 115	**PF0110**
P 23 117	**PF0127**
P 23 118	**PF0227**
P 23 119	**PF0228**
P 23 124	**PF0235**
P 23 126	**PF0695**
P 23 127	**PF0290**
P 23 129	**PF0423**
P 23 130	**PF0288**
P 23 131	**PF0687**
P 23 132	**PF0128**
P 23 133	**PF0129**
P 23 134	**PF0501**
P 23 135	**PF0568**
P 23 136	**PF0643**
P 23 138	**PF0427**
P 23 139	**PF0591**
P 23 141	**PF0560**
P 23 142	**PF0446**
P 23 143	**PF0642**
P 23 146	**PF0503**
P 23 148	**PF0426**

IAM	MAGNETI MARELLI
BREMBO	
P 23 150	**PF0688**
P 23 151	**PF0689**
P 23 152	**PF0425**
P 23 153	**PF0562**
P 24 019	**PF0249**
P 24 029	**PF0246**
P 24 032	**PF0269**
P 24 037	**PF0245**
P 24 039	**PF0352**
P 24 043	**PF0248**
P 24 044	**PF0250**
P 24 045	**PF0247**
P 24 046	**PF0255**
P 24 047	**PF0253**
P 24 048	**PF0163**
P 24 049	**PF0268**
P 24 050	**PF0270**
P 24 052	**PF0556**
P 24 053	**PF0271**
P 24 054	**PF0251**
P 24 055	**PF0252**
P 24 057	**PF0608**
P 24 058	**PF0256**
P 24 059	**PF0265**
P 24 060	**PF0266**
P 24 061	**PF0244**
P 24 062	**PF0569**
P 24 063	**PF0267**
P 24 064	**PF0272**
P 24 065	**PF0648**
P 24 066	**PF0273**
P 24 067	**PF0243**
P 24 072	**PF0254**
P 24 075	**PF0257**
P 24 076	**PF0263**
P 24 077	**PF0797**
P 24 078	**PF0264**
P 24 084	**PF0474**
P 24 086	**PF0439**
P 24 147	**PF0453**
P 24 148	**PF0431**
P 24 151	**PF0712**
P 24 152	**PF0741**
P 24 157	**PF0743**
P 24 158	**PF0604**

IAM	MAGNETI MARELLI
BREMBO	
P 24 260	**PF0740**
P 25 126	**PF0715**
P 25 126	**PF0716**
P 28 017	**PF0457**
P 28 020	**PF0484**
P 28 022	**PF0462**
P 28 023	**PF0275**
P 28 024	**PF0276**
P 28 025	**PF0460**
P 28 026	**PF0274**
P 28 029	**PF0567**
P 28 034	**PF0702**
P 28 036	**PF0691**
P 28 037	**PF0620**
P 28 038	**PF0621**
P 28 039	**PF0461**
P 28 044	**PF0706**
P 28 045	**PF0799**
P 28 050	**PF0707**
P 28 051	**PF0463**
P 28 070	**PF0798**
P 28 072	**PF0703**
P 30 009	**PF0287**
P 30 010	**PF0279**
P 30 011	**PF0800**
P 30 013	**PF0282**
P 30 014	**PF0278**
P 30 016	**PF0458**
P 30 017	**PF0472**
P 30 018	**PF0277**
P 30 019	**PF0447**
P 30 020	**PF0469**
P 30 022	**PF0467**
P 30 023	**PF0448**
P 30 025	**PF0701**
P 30 026	**PF0698**
P 30 027	**PF0655**
P 30 032	**PF0280**
P 30 033	**PF0745**
P 30 034	**PF0281**
P 30 039	**PF0725**
P 30 047	**PF0751**
P 30 069	**PF0801**
P 34 005	**PF0802**
P 36 008	**PF0242**

IAM	MAGNETI MARELLI
BREMBO	
P 36 019	**PF0824**
P 36 020	**PF0555**
P 36 028	**PF0823**
P 44 012	**PF0580**
P 49 016	**PF0286**
P 49 026	**PF0466**
P 49 027	**PF0293**
P 49 032	**PF0295**
P 49 033	**PF0465**
P 49 036	**PF0294**
P 49 039	**PF0699**
P 49 045	**PF0710**
P 49 047	**PF0711**
P 50 003	**PF0325**
P 50 007	**PF0304**
P 50 009	**PF0307**
P 50 011	**PF0305**
P 50 013	**PF0306**
P 50 017	**PF0303**
P 50 019	**PF0505**
P 50 020	**PF0319**
P 50 023	**PF0310**
P 50 024	**PF0297**
P 50 025	**PF0311**
P 50 026	**PF0315**
P 50 027	**PF0322**
P 50 028	**PF0524**
P 50 030	**PF0326**
P 50 031	**PF0327**
P 50 032	**PF0328**
P 50 033	**PF0553**
P 50 035	**PF0301**
P 50 038	**PF0398**
P 50 041	**PF0320**
P 50 042	**PF0584**
P 50 045	**PF0312**
P 50 047	**PF0517**
P 50 049	**PF0318**
P 50 050	**PF0329**
P 50 050	**PF0617**
P 50 051	**PF0330**
P 50 052	**PF0316**
P 50 053	**PF0585**
P 50 054	**PF0302**
P 50 055	**PF0521**

IAM	MAGNETI MARELLI
BREMBO	
P 50 057	**PF0309**
P 50 058	**PF0308**
P 50 059	**PF0647**
P 50 060	**PF0299**
P 50 063	**PF0639**
P 50 064	**PF0640**
P 50 067	**PF0313**
P 50 068	**PF0314**
P 50 069	**PF0653**
P 50 074	**PF0317**
P 50 080	**PF0321**
P 50 080	**PF0504**
P 50 082	**PF0323**
P 50 083	**PF0480**
P 50 084	**PF0300**
P 50 085	**PF0298**
P 50 093	**PF0734**
P 50 094	**PF0735**
P 54 015	**PF0333**
P 54 017	**PF0339**
P 54 018	**PF0341**
P 54 020	**PF0810**
P 54 021	**PF0520**
P 54 022	**PF0334**
P 54 023	**PF0336**
P 54 029	**PF0342**
P 54 030	**PF0338**
P 54 031	**PF0340**
P 54 034	**PF0285**
P 54 038	**PF0337**
P 54 040	**PF0499**
P 56 024	**PF0345**
P 56 031	**PF0346**
P 56 033	**PF0518**
P 56 035	**PF0519**
P 56 036	**PF0344**
P 56 038	**PF0200**
P 56 038	**PF0513**
P 56 042	**PF0557**
P 56 044	**PF0566**
P 56 046	**PF0350**
P 56 061	**PF0371**
P 56 062	**PF0351**
P 56 065	**PF0696**
P 56 066	**PF0650**

IAM	MAGNETI MARELLI
BREMBO	
P 56 086	**PF0594**
P 56 087	**PF0473**
P 59 006	**PF0354**
P 59 010	**PF0367**
P 59 011	**PF0208**
P 59 014	**PF0368**
P 59 017	**PF0205**
P 59 018	**PF0359**
P 59 021	**PF0497**
P 59 022	**PF0360**
P 59 029	**PF0386**
P 59 030	**PF0355**
P 59 031	**PF0357**
P 59 032	**PF0523**
P 59 034	**PF0531**
P 59 035	**PF0548**
P 59 036	**PF0362**
P 59 037	**PF0552**
P 59 038	**PF0356**
P 59 039	**PF0366**
P 59 040	**PF0365**
P 59 041	**PF0370**
P 59 043	**PF0162**
P 59 044	**PF0349**
P 59 045	**PF0364**
P 59 046	**PF0612**
P 59 050	**PF0353**
P 59 051	**PF0361**
P 59 052	**PF0561**
P 59 053	**PF0618**
P 59 054	**PF0723**
P 59 055	**PF0724**
P 59 079	**PF0502**
P 61 028	**PF0372**
P 61 032	**PF0197**
P 61 038	**PF0375**
P 61 041	**PF0167**
P 61 042	**PF0168**
P 61 047	**PF0165**
P 61 051	**PF0196**
P 61 052	**PF0198**
P 61 054	**PF0195**
P 61 056	**PF0374**
P 61 057	**PF0202**
P 61 058	**PF0482**

IAM	MAGNETI MARELLI
BREMBO	
P 61 059	**PF0166**
P 61 060	**PF0786**
P 61 063	**PF0201**
P 61 065	**PF0537**
P 61 066	**PF0174**
P 61 067	**PF0538**
P 61 068	**PF0176**
P 61 069	**PF0199**
P 61 070	**PF0565**
P 61 071	**PF0181**
P 61 072	**PF0564**
P 61 073	**PF0180**
P 61 074	**PF0173**
P 61 075	**PF0587**
P 61 076	**PF0178**
P 61 077	**PF0376**
P 61 078	**PF0615**
P 61 079	**PF0616**
P 61 080	**PF0179**
P 61 081	**PF0172**
P 61 082	**PF0170**
P 61 083	**PF0169**
P 61 084	**PF0171**
P 61 085	**PF0177**
P 61 086	**PF0644**
P 61 089	**PF0496**
P 61 090	**PF0189**
P 61 091	**PF0191**
P 61 093	**PF0190**
P 61 095	**PF0194**
P 61 096	**PF0193**
P 61 101	**PF0373**
P 61 103	**PF0697**
P 61 106	**PF0669**
P 61 110	**PF0570**
P 61 112	**PF0756**
P 61 114	**PF0754**
P 68 008	**PF0203**
P 68 014	**PF0817**
P 68 015	**PF0378**
P 68 020	**PF0385**
P 68 023	**PF0816**
P 68 024	**PF0348**
P 68 025	**PF0544**
P 68 026	**PF0589**

IAM	MAGNETI MARELLI
BREMBO	
P 68 027	**PF0377**
P 68 028	**PF0613**
P 68 029	**PF0381**
P 68 030	**PF0383**
P 68 031	**PF0600**
P 68 032	**PF0571**
P 68 033	**PF0347**
P 68 034	**PF0380**
P 68 036	**PF0590**
P 68 038	**PF0204**
P 68 040	**PF0572**
P 68 041	**PF0382**
P 68 042	**PF0514**
P 68 043	**PF0660**
P 68 044	**PF0661**
P 68 045	**PF0671**
P 68 046	**PF0670**
P 68 047	**PF0672**
P 68 048	**PF0384**
P 68 049	**PF0693**
P 68 050	**PF0429**
P 68 058	**PF0662**
P 68 059	**PF0717**
P 68 060	**PF0718**
P 78 012	**PF0549**
P 78 013	**PF0399**
P 78 015	**PF0400**
P 78 020	**PF0700**
P 79 005	**PF0491**
P 79 011	**PF0534**
P 79 012	**PF0471**
P 79 014	**PF0490**
P 79 015	**PF0450**
P 79 018	**PF0494**
P 79 020	**PF0470**
P 79 027	**PF0464**
P 79 029	**PF0646**
P 82 115	**PF0645**
P 83 009	**PF0401**
P 83 011	**PF0405**
P 83 024	**PF0705**
P 83 025	**PF0635**
P 83 028	**PF0509**
P 83 034	**PF0406**
P 83 041	**PF0532**

IAM	MAGNETI MARELLI
BREMBO	
P 83 043	**PF0595**
P 83 046	**PF0402**
P 83 047	**PF0403**
P 83 050	**PF0533**
P 83 052	**PF0593**
P 83 053	**PF0410**
P 83 054	**PF0493**
P 83 055	**PF0577**
P 83 056	**PF0598**
P 83 057	**PF0578**
P 83 061	**PF0597**
P 83 064	**PF0408**
P 83 065	**PF0407**
P 83 069	**PF0495**
P 83 071	**PF0632**
P 83 073	**PF0638**
P 83 074	**PF0637**
P 83 079	**PF0664**
P 83 080	**PF0666**
P 83 081	**PF0665**
P 83 082	**PF0663**
P 83 083	**PF0629**
P 83 084	**PF0596**
P 83 085	**PF0404**
P 83 086	**PF0628**
P 83 087	**PF0631**
P 83 089	**PF0633**
P 83 097	**PF0784**
P 83 101	**PF0627**
P 83 102	**PF0409**
P 83 103	**PF0592**
P 83 112	**PF0686**
P 83 117	**PF0641**
P 83 145	**PF0634**
P 83 148	**PF0781**
P 83 150	**PF0708**
P 85 005	**PF0394**
P 85 012	**PF0392**
P 85 013	**PF0116**
P 85 015	**PF0806**
P 85 017	**PF0144**
P 85 019	**PF0395**
P 85 020	**PF0131**
P 85 022	**PF0397**
P 85 024	**PF0393**

IAM	MAGNETI MARELLI
BREMBO	
P 85 025	**PF0388**
P 85 026	**PF0130**
P 85 027	**PF0415**
P 85 028	**PF0488**
P 85 029	**PF0417**
P 85 030	**PF0390**
P 85 031	**PF0391**
P 85 032	**PF0389**
P 85 035	**PF0137**
P 85 036	**PF0146**
P 85 037	**PF0143**
P 85 039	**PF0260**
P 85 041	**PF0134**
P 85 041	**PF0515**
P 85 042	**PF0145**
P 85 043	**PF0258**
P 85 043	**PF0516**
P 85 044	**PF0138**
P 85 045	**PF0136**
P 85 046	**PF0586**
P 85 047	**PF0418**
P 85 048	**PF0416**
P 85 049	**PF0419**
P 85 050	**PF0528**
P 85 052	**PF0539**
P 85 055	**PF0411**
P 85 056	**PF0607**
P 85 057	**PF0575**
P 85 058	**PF0259**
P 85 060	**PF0261**
P 85 062	**PF0262**
P 85 063	**PF0535**
P 85 064	**PF0603**
P 85 066	**PF0442**
P 85 071	**PF0396**
P 85 072	**PF0132**
P 85 073	**PF0133**
P 85 075	**PF0135**
P 85 076	**PF0602**
P 85 077	**PF0576**
P 85 079	**PF0606**
P 85 081	**PF0413**
P 85 082	**PF0414**
P 85 083	**PF0412**
P 85 084	**PF0609**

IAM	MAGNETI MARELLI
BREMBO	
P 85 085	**PF0142**
P 85 090	**PF0625**
P 85 095	**PF0601**
P 85 097	**PF0605**
P 85 098	**PF0140**
P 85 099	**PF0141**
P 85 101	**PF0443**
P 85 104	**PF0554**
P 85 108	**PF0658**
P 85 112	**PF0659**
P 85 113	**PF0139**
P 85 114	**PF0441**
P 85 117	**PF0675**
P 85 118	**PF0676**
P 85 119	**PF0673**
P 85 120	**PF0674**
P 85 125	**PF0714**
P 85 129	**PF0610**
P 86 014	**PF0543**
P 86 015	**PF0421**
P 86 016	**PF0422**
P 86 017	**PF0335**
P 86 018	**PF0679**
P 86 019	**PF0681**
P 86 025	**PF0821**
P A6 007	**PF0547**
P A6 014	**PF0475**
P A6 017	**PF0283**
P A6 018	**PF0546**
P A6 019	**PF0476**
P A6 021	**PF0526**
P A6 022	**PF0477**
P A6 023	**PF0434**
P A6 025	**PF0530**
P A6 026	**PF0649**
P A6 027	**PF0284**
FERODO	
FCV1126	**PF0530**
FCV1405	**PF0434**
FDB1000	**PF0787**
FDB1002	**PF0192**
FDB1003	**PF0788**
FDB1017	**PF0497**
FDB1021	**PF0705**

IAM	MAGNETI MARELLI
FERODO	
FDB1038	**PF0504**
FDB1039	**PF0322**
FDB1040	**PF0222**
FDB1040	**PF0782**
FDB1044	**PF0482**
FDB1044	**PF0326**
FDB1049	**PF0310**
FDB1050	**PF0315**
FDB1052	**PF0103**
FDB1054	**PF0390**
FDB1055	**PF0260**
FDB1056	**PF0102**
FDB1062	**PF0374**
FDB1063	**PF0202**
FDB1067	**PF0205**
FDB1068	**PF0360**
FDB1072	**PF0393**
FDB1073	**PF0159**
FDB1075	**PF0158**
FDB1081	**PF0248**
FDB1082	**PF0250**
FDB1085	**PF0817**
FDB1091	**PF0518**
FDB1092	**PF0520**
FDB1093	**PF0334**
FDB1094	**PF0134**
FDB1094	**PF0515**
FDB1095	**PF0336**
FDB1096	**PF0344**
FDB1098	**PF0785**
FDB1101	**PF0388**
FDB1101	**PF0411**
FDB1109	**PF0166**
FDB1112	**PF0786**
FDB1113	**PF0106**
FDB1116	**PF0207**
FDB1124	**PF0816**
FDB1132	**PF0420**
FDB1134	**PF0112**
FDB1135	**PF0200**
FDB1137	**PF0104**
FDB1160	**PF0239**
FDB1160	**PF0240**
FDB1162	**PF0398**
FDB1167	**PF0146**

IAM	MAGNETI MARELLI
FERODO	
FDB1168	**PF0196**
FDB1276	**PF0247**
FDB1288	**PF0391**
FDB1289	**PF0145**
FDB1292	**PF0544**
FDB1293	**PF0355**
FDB1294	**PF0357**
FDB1295	**PF0523**
FDB1299	**PF0101**
FDB1299	**PF0118**
FDB1300	**PF0155**
FDB1301	**PF0157**
FDB1303	**PF0301**
FDB1304	**PF0327**
FDB1305	**PF0328**
FDB1310	**PF0297**
FDB1311	**PF0311**
FDB1312	**PF0389**
FDB1318	**PF0255**
FDB1319	**PF0253**
FDB1321	**PF0532**
FDB1322	**PF0553**
FDB1323	**PF0143**
FDB1324	**PF0216**
FDB1326	**PF0800**
FDB1334	**PF0113**
FDB1337	**PF0164**
FDB1349	**PF0109**
FDB1356	**PF0517**
FDB1358	**PF0308**
FDB1368	**PF0533**
FDB1369	**PF0510**
FDB1370	**PF0537**
FDB1376	**PF0227**
FDB1376	**PF0233**
FDB1377	**PF0232**
FDB1378	**PF0201**
FDB1378	**PF0512**
FDB1380	**PF0613**
FDB1382	**PF0422**
FDB1383	**PF0543**
FDB1384	**PF0335**
FDB1385	**PF0531**
FDB1392	**PF0592**
FDB1393	**PF0251**

IAM	MAGNETI MARELLI
FERODO	
FDB1394	**PF0252**
FDB1395	**PF0593**
FDB1398	**PF0516**
FDB1399	**PF0170**
FDB1407	**PF0607**
FDB1408	**PF0603**
FDB1409	**PF0600**
FDB1410	**PF0565**
FDB1411	**PF0181**
FDB1412	**PF0564**
FDB1413	**PF0180**
FDB1414	**PF0318**
FDB1416	**PF0265**
FDB1419	**PF0575**
FDB1420	**PF0377**
FDB1421	**PF0534**
FDB1422	**PF0810**
FDB1423	**PF0548**
FDB1424	**PF0362**
FDB1425	**PF0266**
FDB1425	**PF0550**
FDB1426	**PF0320**
FDB1427	**PF0584**
FDB1428	**PF0312**
FDB1439	**PF0567**
FDB1440	**PF0384**
FDB1441	**PF0383**
FDB1447	**PF0595**
FDB1451	**PF0138**
FDB1454	**PF0519**
FDB1455	**PF0293**
FDB1459	**PF0549**
FDB1463	**PF0136**
FDB1466	**PF0126**
FDB1467	**PF0214**
FDB1468	**PF0124**
FDB1468	**PF0563**
FDB1469	**PF0125**
FDB1470	**PF0289**
FDB1471	**PF0114**
FDB1472	**PF0552**
FDB1476	**PF0176**
FDB1477	**PF0199**
FDB1481	**PF0443**
FDB1481	**PF0259**

IAM	MAGNETI MARELLI
FERODO	
FDB1482	**PF0258**
FDB1482	**PF0586**
FDB1483	**PF0152**
FDB1484	**PF0539**
FDB1491	**PF0348**
FDB1492	**PF0416**
FDB1493	**PF0329**
FDB1493	**PF0617**
FDB1494	**PF0330**
FDB1495	**PF0421**
FDB1496	**PF0261**
FDB1498	**PF0279**
FDB1499	**PF0332**
FDB1500	**PF0574**
FDB1501	**PF0209**
FDB1502	**PF0635**
FDB1508	**PF0107**
FDB1513	**PF0410**
FDB1514	**PF0577**
FDB1515	**PF0371**
FDB1518	**PF0419**
FDB1520	**PF0162**
FDB1521	**PF0356**
FDB1526	**PF0316**
FDB1528	**PF0493**
FDB1529	**PF0597**
FDB1530	**PF0598**
FDB1531	**PF0578**
FDB1532	**PF0470**
FDB1533	**PF0490**
FDB1534	**PF0153**
FDB1535	**PF0386**
FDB1540	**PF0349**
FDB1540	**PF0570**
FDB1541	**PF0571**
FDB1542	**PF0173**
FDB1543	**PF0587**
FDB1544	**PF0380**
FDB1545	**PF0498**
FDB1556	**PF0182**
FDB1556	**PF0224**
FDB1557	**PF0465**
FDB1557	**PF0466**
FDB1568	**PF0256**
FDB1573	**PF0408**

IAM	MAGNETI MARELLI
FERODO	
FDB1574	**PF0407**
FDB1580	**PF0566**
FDB1582	**PF0291**
FDB1594	**PF0244**
FDB1597	**PF0580**
FDB1599	**PF0538**
FDB1602	**PF0458**
FDB1603	**PF0342**
FDB1604	**PF0340**
FDB1605	**PF0282**
FDB1606	**PF0278**
FDB1607	**PF0287**
FDB1617	**PF0347**
FDB1619	**PF0295**
FDB1621	**PF0338**
FDB1628	**PF0151**
FDB1629	**PF0605**
FDB1630	**PF0219**
FDB1630	**PF0220**
FDB1631	**PF0679**
FDB1632	**PF0681**
FDB1633	**PF0536**
FDB1633	**PF0535**
FDB1634	**PF0396**
FDB1635	**PF0132**
FDB1636	**PF0601**
FDB1636	**PF0133**
FDB1637	**PF0444**
FDB1640	**PF0364**
FDB1641	**PF0135**
FDB1642	**PF0413**
FDB1645	**PF0442**
FDB1648	**PF0402**
FDB1649	**PF0403**
FDB1651	**PF0238**
FDB1652	**PF0236**
FDB1654	**PF0262**
FDB1655	**PF0602**
FDB1661	**PF0585**
FDB1662	**PF0576**
FDB1663	**PF0121**
FDB1666	**PF0558**
FDB1667	**PF0590**
FDB1669	**PF0702**
FDB1670	**PF0472**

IAM	MAGNETI MARELLI
FERODO	
FDB1672	**PF0737**
FDB1675	**PF0569**
FDB1676	**PF0331**
FDB1679	**PF0461**
FDB1693	**PF0350**
FDB1698	**PF0409**
FDB1699	**PF0163**
FDB1704	**PF0691**
FDB1706	**PF0608**
FDB1717	**PF0142**
FDB1721	**PF0294**
FDB1725	**PF0376**
FDB1726	**PF0615**
FDB1727	**PF0616**
FDB1728	**PF0178**
FDB1733	**PF0277**
FDB1735	**PF0447**
FDB1736	**PF0448**
FDB1738	**PF0521**
FDB1749	**PF0302**
FDB1750	**PF0309**
FDB1751	**PF0622**
FDB1765	**PF0606**
FDB1766	**PF0243**
FDB1773	**PF0160**
FDB1773	**PF0507**
FDB1783	**PF0280**
FDB1784	**PF0179**
FDB1788	**PF0131**
FDB1790	**PF0172**
FDB1798	**PF0225**
FDB1805	**PF0115**
FDB1806	**PF0148**
FDB1807	**PF0149**
FDB1808	**PF0486**
FDB1811	**PF0450**
FDB1816	**PF0802**
FDB1817	**PF0439**
FDB1826	**PF0625**
FDB1830	**PF0639**
FDB1831	**PF0640**
FDB1833	**PF0612**
FDB1839	**PF0285**
FDB1840	**PF0469**
FDB1852	**PF0495**

IAM	MAGNETI MARELLI
FERODO	
FDB1858	**PF0230**
FDB1859	**PF0620**
FDB1862	**PF0621**
FDB1863	**PF0400**
FDB1865	**PF0572**
FDB1866	**PF0381**
FDB1869	**PF0281**
FDB1869	**PF0628**
FDB1875	**PF0241**
FDB1885	**PF0267**
FDB1890	**PF0404**
FDB1891	**PF0632**
FDB1891	**PF0663**
FDB1892	**PF0633**
FDB1895	**PF0596**
FDB1896	**PF0554**
FDB1898	**PF0797**
FDB1917	**PF0257**
FDB1918	**PF0264**
FDB1919	**PF0561**
FDB1920	**PF0361**
FDB1931	**PF0431**
FDB1936	**PF0637**
FDB1944	**PF0454**
FDB1944	**PF0455**
FDB1945	**PF0215**
FDB1946	**PF0430**
FDB1947	**PF0700**
FDB1950	**PF0655**
FDB1955	**PF0698**
FDB1956	**PF0701**
FDB1957	**PF0555**
FDB1968	**PF0502**
FDB1969	**PF0206**
FDB1971	**PF0169**
FDB1972	**PF0644**
FDB1973	**PF0177**
FDB1974	**PF0147**
FDB1975	**PF0626**
FDB1976	**PF0290**
FDB1978	**PF0313**
FDB1979	**PF0653**
FDB1979	**PF0654**
FDB1980	**PF0314**
FDB1988	**PF0791**

IAM	MAGNETI MARELLI
FERODO	
FDB1991	**PF0641**
FDB222	**PF0116**
FDB287	**PF0175**
FDB308	**PF0405**
FDB328	**PF0304**
FDB351	**PF0212**
FDB351	**PF0237**
FDB370	**PF0105**
FDB375	**PF0354**
FDB385	**PF0395**
FDB392	**PF0394**
FDB393	**PF0372**
FDB4023	**PF0337**
FDB4035	**PF0545**
FDB4040	**PF0127**
FDB4044	**PF0140**
FDB4045	**PF0139**
FDB4046	**PF0664**
FDB4047	**PF0665**
FDB4051	**PF0351**
FDB4052	**PF0760**
FDB4053	**PF0650**
FDB4055	**PF0317**
FDB4057	**PF0659**
FDB4060	**PF0494**
FDB4062	**PF0699**
FDB4067	**PF0487**
FDB4069	**PF0353**
FDB4074	**PF0211**
FDB4081	**PF0627**
FDB409	**PF0783**
FDB4108	**PF0824**
FDB4110	**PF0684**
FDB4112	**PF0695**
FDB4148	**PF0696**
FDB4160	**PF0667**
FDB4177	**PF0683**
FDB4180	**PF0429**
FDB4181	**PF0670**
FDB4182	**PF0382**
FDB4186	**PF0660**
FDB419	**PF0392**
FDB4191	**PF0150**
FDB4194	**PF0725**
FDB4196	**PF0210**

IAM	MAGNETI MARELLI
FERODO	
FDB4198	**PF0703**
FDB4206	**PF0423**
FDB4207	**PF0723**
FDB4208	**PF0724**
FDB4209	**PF0690**
FDB4221	**PF0583**
FDB4223	**PF0610**
FDB4224	**PF0754**
FDB4228	**PF0799**
FDB4236	**PF0784**
FDB4237	**PF0263**
FDB4249	**PF0671**
FDB4250	**PF0171**
FDB4264	**PF0424**
FDB4265	**PF0433**
FDB4269	**PF0706**
FDB4276	**PF0781**
FDB4286	**PF0738**
FDB4299	**PF0449**
FDB4308	**PF0129**
FDB4316	**PF0441**
FDB4320	**PF0591**
FDB4321	**PF0503**
FDB4336	**PF0753**
FDB4337	**PF0425**
FDB4340	**PF0662**
FDB435	**PF0459**
FDB4353	**PF0427**
FDB4353	**PF0440**
FDB4354	**PF0634**
FDB4354	**PF0636**
FDB4380	**PF0508**
FDB4383	**PF0623**
FDB4393	**PF0675**
FDB440	**PF0378**
FDB4400	**PF0428**
FDB4404	**PF0707**
FDB4405	**PF0756**
FDB4410	**PF0676**
FDB4411	**PF0686**
FDB4416	**PF0743**
FDB4427	**PF0611**
FDB4430	**PF0646**
FDB4433	**PF0715**
FDB4433	**PF0716**

IAM	MAGNETI MARELLI
FERODO	
FDB4458	**PF0562**
FDB4459	**PF0688**
FDB4464	**PF0689**
FDB472	**PF0457**
FDB478	**PF0492**
FDB519	**PF0807**
FDB525	**PF0368**
FDB541	**PF0144**
FDB542	**PF0117**
FDB558	**PF0197**
FDB558	**PF0790**
FDB579	**PF0249**
FDB586	**PF0359**
FDB588	**PF0491**
FDB590	**PF0130**
FDB600	**PF0467**
FDB609	**PF0367**
FDB610	**PF0397**
FDB613	**PF0484**
FDB617	**PF0246**
FDB619	**PF0375**
FDB632	**PF0242**
FDB644	**PF0307**
FDB647	**PF0119**
FDB651	**PF0226**
FDB669	**PF0305**
FDB687	**PF0167**
FDB707	**PF0345**
FDB715	**PF0286**
FDB719	**PF0168**
FDB732	**PF0208**
FDB745	**PF0165**
FDB749	**PF0223**
FDB759	**PF0333**
FDB763	**PF0343**
FDB765	**PF0339**
FDB768	**PF0122**
FDB774	**PF0806**
FDB776	**PF0275**
FDB777	**PF0276**
FDB778	**PF0460**
FDB785	**PF0488**
FDB797	**PF0401**
FDB799	**PF0303**
FDB804	**PF0341**

IAM	MAGNETI MARELLI
FERODO	
FDB845	**PF0203**
FDB850	**PF0154**
FDB857	**PF0485**
FDB859	**PF0346**
FDB867	**PF0406**
FDB874	**PF0198**
FDB876	**PF0195**
FDB881	**PF0385**
FDB884	**PF0245**
FDB895	**PF0229**
FDB896	**PF0235**
FDB905	**PF0274**
FDB909	**PF0352**
FDB912	**PF0234**
FDB925	**PF0217**
FDB925	**PF0218**
FDB928	**PF0509**
FDB956	**PF0462**
FDB969	**PF0137**
FDB979	**PF0306**
FDB995	**PF0111**
FDB997	**PF0579**
FRV1791	**PF0480**
FRV1791	**PF0481**
FRV1977	**PF0478**
FVR1038	**PF0321**
FVR1043	**PF0524**
FVR1045	**PF0505**
FVR1102	**PF0283**
FVR1131	**PF0415**
FVR1132	**PF0529**
FVR1163	**PF0418**
FVR1292	**PF0268**
FVR1306	**PF0319**
FVR1315	**PF0526**
FVR1338	**PF0269**
FVR1350	**PF0546**
FVR1352	**PF0476**
FVR1381	**PF0556**
FVR1390	**PF0477**
FVR1396	**PF0183**
FVR1397	**PF0185**
FVR1452	**PF0366**
FVR1453	**PF0365**
FVR1461	**PF0271**

IAM	MAGNETI MARELLI
FERODO	
FVR1478	**PF0186**
FVR1479	**PF0187**
FVR1480	**PF0188**
FVR1482	**PF0541**
FVR1516	**PF0370**
FVR1519	**PF0528**
FVR1616	**PF0557**
FVR1644	**PF0412**
FVR1771	**PF0193**
FVR1772	**PF0194**
FVR1777	**PF0647**
FVR1778	**PF0298**
FVR1779	**PF0299**
FVR1780	**PF0300**
FVR1925	**PF0643**
FVR1927	**PF0191**
FVR1928	**PF0272**
FVR1929	**PF0648**
FVR1930	**PF0273**
FVR239	**PF0325**
FVR4036	**PF0649**
FVR4037	**PF0284**
FVR4054	**PF0573**
FVR549	**PF0815**
FVR701	**PF0270**
FVR713	**PF0475**
FVR852	**PF0547**
FVR967	**PF0789**
FVR968	**PF0184**
FVR970	**PF0417**
RVR4398	**PF0740**
ICER	
140403	**PF0175**
140405	**PF0325**
140880	**PF0488**
140891	**PF0475**
140896	**PF0268**
140896	**PF0269**
140897	**PF0270**
140926	**PF0807**
140933	**PF0352**
140965	**PF0547**
140979	**PF0339**
140980	**PF0341**

IAM	MAGNETI MARELLI
ICER	
140991	PF0497
141007	PF0401
141026	PF0635
141027	PF0705
141046	PF0787
141049	PF0417
141053	PF0183
141053	PF0789
141054	PF0184
141054	PF0185
141087	PF0788
141102	PF0322
141103	PF0505
141104	PF0321
141122	PF0192
141126	PF0524
141166	PF0418
141167	PF0529
141168	PF0415
141180	PF0816
141208	PF0283
141219	PF0544
141234	PF0810
141241	PF0326
141266	PF0279
141284	PF0328
141288	PF0327
141289	PF0319
141315	PF0371
141320	PF0419
141321	PF0416
141328	PF0546
141350	PF0539
141351	PF0370
141351	PF0542
141352	PF0541
141357	PF0476
141367	PF0556
141425	PF0528
141442	PF0366
141498	PF0271
141499	PF0480
141511	PF0365
141522	PF0187
141523	PF0186

IAM	MAGNETI MARELLI
ICER	
141524	PF0188
141785	PF0647
141786	PF0298
141787	PF0300
141792	PF0648
141793	PF0272
141794	PF0273
141802	PF0193
141803	PF0189
141804	PF0191
141808	PF0557
141823	PF0194
141832	PF0649
141836	PF0190
141837	PF0284
141846	PF0650
141847	PF0573
141849	PF0299
141889	PF0479
142116	PF0740
142119	PF0741
180337	PF0116
180415	PF0105
180418	PF0212
180420	PF0304
180454	PF0354
180459	PF0394
180460	PF0392
180461	PF0395
180462	PF0405
180474	PF0237
180517	PF0306
180543	PF0249
180612	PF0292
180633	PF0372
180649	PF0197
180674	PF0783
180692	PF0368
180693	PF0367
180697	PF0131
180697	PF0444
180723	PF0378
180723	PF0385
180725	PF0815
180734	PF0492

IAM	MAGNETI MARELLI
ICER	
180745	PF0305
180752	PF0457
180760	PF0122
180761	PF0117
180785	PF0294
180787	PF0375
180788	PF0165
180789	PF0144
180790	PF0246
180798	PF0462
180802	PF0154
180804	PF0345
180807	PF0359
180808	PF0130
180811	PF0491
180858	PF0208
180860	PF0484
180862	PF0167
180864	PF0168
180868	PF0119
180877	PF0468
180887	PF0459
180916	PF0245
180920	PF0198
180922	PF0346
180923	PF0223
180929	PF0790
180930	PF0817
180932	PF0195
180949	PF0226
180953	PF0217
180953	PF0218
180958	PF0276
180959	PF0275
180970	PF0286
180971	PF0296
180976	PF0303
180978	PF0307
180993	PF0203
180993	PF0204
181005	PF0406
181012	PF0806
181018	PF0219
181018	PF0220
181018	PF0456

IAM	MAGNETI MARELLI
ICER	
181019	PF0274
181024	PF0460
181048	PF0393
181094	PF0518
181095	PF0519
181107	PF0374
181108	PF0202
181109	PF0482
181115	PF0310
181117	PF0520
181118	PF0334
181119	PF0390
181121	PF0196
181123	PF0222
181124	PF0102
181125	PF0101
181128	PF0360
181129	PF0333
181130	PF0388
181131	PF0137
181136	PF0786
181138	PF0146
181139	PF0260
181140	PF0159
181141	PF0158
181142	PF0248
181143	PF0250
181148	PF0229
181150	PF0166
181152	PF0205
181153	PF0343
181156	PF0389
181157	PF0138
181157	PF0145
181159	PF0315
181165	PF0336
181169	PF0509
181174	PF0157
181178	PF0391
181184	PF0515
181185	PF0287
181212	PF0112
181213	PF0111
181214	PF0242
181217	PF0200

IAM	MAGNETI MARELLI
ICER	
181217	PF0514
181218	PF0386
181226	PF0234
181229	PF0247
181233	PF0517
181235	PF0532
181236	PF0335
181242	PF0782
181243	PF0104
181248	PF0523
181249	PF0355
181250	PF0531
181255	PF0512
181260	PF0206
181262	PF0164
181263	PF0207
181263	PF0510
181264	PF0255
181265	PF0253
181267	PF0467
181268	PF0800
181274	PF0398
181279	PF0121
181283	PF0118
181286	PF0567
181290	PF0344
181293	PF0549
181294	PF0421
181295	PF0155
181297	PF0422
181298	PF0543
181304	PF0533
181307	PF0106
181309	PF0293
181310	PF0297
181311	PF0311
181312	PF0553
181317	PF0397
181331	PF0142
181334	PF0466
181338	PF0134
181342	PF0209
181343	PF0252
181344	PF0251
181348	PF0239

IAM	MAGNETI MARELLI
ICER	
181349	PF0132
181349	PF0516
181353	PF0551
181358	PF0496
181362	PF0143
181363	PF0357
181365	PF0537
181368	PF0548
181369	PF0312
181372	PF0282
181373	PF0411
181374	PF0342
181375	PF0340
181380	PF0266
181380	PF0550
181381	PF0265
181384	PF0261
181385	PF0552
181387	PF0259
181388	PF0170
181389	PF0320
181389	PF0585
181390	PF0584
181393	PF0258
181396	PF0136
181406	PF0564
181407	PF0180
181419	PF0181
181420	PF0565
181424	PF0498
181429	PF0176
181431	PF0384
181432	PF0571
181433	PF0349
181434	PF0332
181436	PF0785
181438	PF0377
181439	PF0201
181440	PF0214
181440	PF0562
181441	PF0233
181444	PF0123
181444	PF0126
181445	PF0563
181446	PF0108

IAM	MAGNETI MARELLI
ICER	
181447	PF0555
181450	PF0173
181451	PF0587
181452	PF0471
181453	PF0490
181454	PF0289
181501	PF0216
181502	PF0109
181503	PF0125
181508	PF0227
181509	PF0350
181510	PF0308
181513	PF0408
181514	PF0407
181518	PF0232
181519	PF0577
181520	PF0578
181525	PF0538
181526	PF0362
181527	PF0318
181530	PF0579
181531	PF0607
181533	PF0383
181534	PF0347
181535	PF0380
181536	PF0162
181537	PF0256
181539	PF0472
181540	PF0281
181540	PF0618
181542	PF0465
181543	PF0702
181548	PF0485
181549	PF0152
181550	PF0153
181553	PF0182
181556	PF0595
181557	PF0655
181566	PF0163
181567	PF0135
181570	PF0199
181572	PF0600
181573	PF0402
181574	PF0580
181575	PF0575

IAM	MAGNETI MARELLI
ICER	
181576	PF0316
181577	PF0151
181578	PF0295
181581	PF0566
181582	PF0499
181583	PF0592
181587	PF0410
181589	PF0534
181590	PF0396
181592	PF0364
181593	PF0442
181594	PF0535
181594	PF0536
181597	PF0576
181598	PF0107
181599	PF0331
181600	PF0133
181601	PF0103
181602	PF0238
181604	PF0235
181605	PF0262
181606	PF0447
181607	PF0593
181608	PF0598
181610	PF0458
181612	PF0681
181613	PF0420
181614	PF0586
181616	PF0240
181617	PF0244
181621	PF0291
181622	PF0356
181636	PF0554
181637	PF0178
181643	PF0469
181644	PF0277
181645	PF0278
181647	PF0110
181650	PF0348
181651	PF0243
181652	PF0608
181653	PF0606
181654	PF0605
181654	PF0609
181655	PF0679

IAM	MAGNETI MARELLI
ICER	
181656	PF0376
181657	PF0615
181658	PF0616
181659	PF0236
181662	PF0147
181663	PF0624
181664	PF0148
181665	PF0409
181673	PF0228
181674	PF0412
181675	PF0329
181675	PF0617
181676	PF0330
181677	PF0309
181678	PF0302
181679	PF0590
181681	PF0612
181682	PF0613
181683	PF0160
181684	PF0161
181687	PF0737
181688	PF0403
181695	PF0691
181698	PF0622
181701	PF0791
181702	PF0172
181704	PF0493
181709	PF0280
181710	PF0745
181711	PF0698
181712	PF0701
181717	PF0399
181718	PF0463
181720	PF0448
181722	PF0267
181728	PF0596
181729	PF0179
181730	PF0113
181731	PF0450
181732	PF0224
181739	PF0486
181740	PF0230
181741	PF0621
181743	PF0569
181744	PF0431

IAM	MAGNETI MARELLI
ICER	
181746	PF0285
181747	PF0494
181748	PF0353
181750	PF0637
181756	PF0619
181758	PF0241
181759	PF0700
181760	PF0663
181761	PF0633
181762	PF0632
181763	PF0225
181764	PF0641
181770	PF0640
181772	PF0115
181773	PF0620
181774	PF0628
181775	PF0263
181776	PF0264
181777	PF0625
181778	PF0414
181779	PF0413
181780	PF0114
181781	PF0495
181781	PF0639
181784	PF0337
181795	PF0507
181796	PF0317
181800	PF0400
181801	PF0257
181805	PF0797
181806	PF0338
181809	PF0561
181810	PF0361
181812	PF0626
181814	PF0583
181820	PF0597
181821	PF0313
181822	PF0439
181826	PF0725
181828	PF0767
181834	PF0351
181835	PF0141
181843	PF0215
181844	PF0454
181844	PF0455

IAM	MAGNETI MARELLI
ICER	
181845	PF0290
181851	PF0373
181852	PF0169
181853	PF0177
181854	PF0661
181855	PF0660
181856	PF0672
181857	PF0658
181859	PF0671
181860	PF0381
181861	PF0572
181862	PF0140
181864	PF0139
181865	PF0653
181865	PF0654
181866	PF0644
181868	PF0699
181869	PF0664
181870	PF0666
181876	PF0683
181877	PF0404
181878	PF0631
181879	PF0127
181881	PF0684
181882	PF0695
181883	PF0693
181886	PF0669
181887	PF0799
181891	PF0369
181892	PF0665
181893	PF0706
181895	PF0171
181896	PF0738
181898	PF0627
181899	PF0629
181900	PF0314
181903	PF0288
181904	PF0382
181906	PF0707
181907	PF0704
181908	PF0211
181910	PF0210
181913	PF0724
181914	PF0723
181915	PF0429

IAM	MAGNETI MARELLI
ICER	
181916	PF0686
181919	PF0760
181922	PF0434
181923	PF0659
181924	PF0545
181925	PF0697
181926	PF0784
181927	PF0363
181928	PF0754
181929	PF0690
181932	PF0423
181939	PF0424
181940	PF0150
181942	PF0694
181943	PF0433
181947	PF0630
181967	PF0441
181970	PF0426
181974	PF0802
181976	PF0751
181982	PF0634
181983	PF0636
181986	PF0675
181990	PF0502
181995	PF0129
181996	PF0425
182002	PF0508
182007	PF0128
182008	PF0623
182010	PF0501
182013	PF0570
182017	PF0646
182019	PF0594
182021	PF0756
182022	PF0781
182027	PF0753
182029	PF0749
182032	PF0428
182035	PF0766
182036	PF0750
182038	PF0503
182039	PF0736
182040	PF0511
182043	PF0568
182055	PF0710

IAM	MAGNETI MARELLI
ICER	
182056	**PF0711**
182060	**PF0638**
182061	**PF0734**
182062	**PF0735**
182065	**PF0582**
182098	**PF0713**
182099	**PF0714**
182101	**PF0798**
182106	**PF0820**
182108	**PF0712**
182111	**PF0715**
182111	**PF0716**
182115	**PF0717**
182118	**PF0678**
182126	**PF0677**
182127	**PF0688**
182129	**PF0708**
182134	**PF0743**
182149	**PF0823**
182169	**PF0809**
182171	**PF0808**
182175	**PF0727**
182176	**PF0805**
141103-046	**PF0506**
141103-203	**PF0323**
141104-046	**PF0504**
141126-700	**PF0525**
141208-123	**PF0527**
141208-200	**PF0526**
141315-701	**PF0589**
141499-203	**PF0481**
141793-204	**PF0645**
141836-203	**PF0643**
151640-229	**PF0474**
181118-700	**PF0521**
181217-203	**PF0513**
181233-087	**PF0301**
181375-202	**PF0445**
181387-700	**PF0443**
181388-700	**PF0174**
181444-701	**PF0430**
181600-703	**PF0601**
181650-703	**PF0432**
181651-200	**PF0821**
181674-204	**PF0602**

IAM	MAGNETI MARELLI
ICER	
181674-204	**PF0603**
181683-203	**PF0156**
181854-203	**PF0662**
181879-203	**PF0591**
181881-200	**PF0818**
181986-203	**PF0676**
182115-202	**PF0718**
MINTEX	
MDB1141	**PF0354**
MDB1191	**PF0116**
MDB1205	**PF0175**
MDB1218	**PF0212**
MDB1222	**PF0304**
MDB1240	**PF0105**
MDB1251	**PF0405**
MDB1266	**PF0394**
MDB1267	**PF0392**
MDB1273	**PF0395**
MDB1290	**PF0249**
MDB1291	**PF0372**
MDB1316	**PF0817**
MDB1326	**PF0492**
MDB1331	**PF0378**
MDB1339	**PF0197**
MDB1370	**PF0367**
MDB1377	**PF0131**
MDB1377	**PF0432**
MDB1382	**PF0144**
MDB1382	**PF0348**
MDB1385	**PF0359**
MDB1391	**PF0117**
MDB1402	**PF0305**
MDB1409	**PF0783**
MDB1411	**PF0457**
MDB1429	**PF0815**
MDB1442	**PF0375**
MDB1474	**PF0491**
MDB1483	**PF0165**
MDB1488	**PF0467**
MDB1488	**PF0468**
MDB1489	**PF0345**
MDB1493	**PF0246**
MDB1505	**PF0226**
MDB1506	**PF0242**

IAM	MAGNETI MARELLI
MINTEX	
MDB1506	**PF0788**
MDB1507	**PF0459**
MDB1511	**PF0119**
MDB1513	**PF0807**
MDB1518	**PF0122**
MDB1519	**PF0168**
MDB1530	**PF0286**
MDB1531	**PF0130**
MDB1537	**PF0488**
MDB1539	**PF0339**
MDB1543	**PF0274**
MDB1552	**PF0485**
MDB1556	**PF0208**
MDB1558	**PF0269**
MDB1559	**PF0270**
MDB1560	**PF0306**
MDB1561	**PF0475**
MDB1564	**PF0462**
MDB1565	**PF0307**
MDB1570	**PF0806**
MDB1572	**PF0154**
MDB1573	**PF0219**
MDB1573	**PF0220**
MDB1573	**PF0223**
MDB1585	**PF0325**
MDB1610	**PF0275**
MDB1611	**PF0167**
MDB1615	**PF0276**
MDB1616	**PF0460**
MDB1620	**PF0245**
MDB1623	**PF0346**
MDB1627	**PF0303**
MDB1628	**PF0203**
MDB1629	**PF0198**
MDB1646	**PF0341**
MDB1647	**PF0401**
MDB1651	**PF0368**
MDB1657	**PF0352**
MDB1658	**PF0406**
MDB1659	**PF0484**
MDB1662	**PF0195**
MDB1666	**PF0217**
MDB1666	**PF0218**
MDB1676	**PF0385**
MDB1682	**PF0417**

IAM	MAGNETI MARELLI
MINTEX	
MDB1684	**PF0509**
MDB1695	**PF0635**
MDB1696	**PF0705**
MDB1698	**PF0497**
MDB1702	**PF0787**
MDB1703	**PF0789**
MDB1704	**PF0184**
MDB1726	**PF0520**
MDB1727	**PF0334**
MDB1731	**PF0374**
MDB1732	**PF0202**
MDB1733	**PF0222**
MDB1734	**PF0102**
MDB1735	**PF0118**
MDB1736	**PF0310**
MDB1737	**PF0322**
MDB1738	**PF0505**
MDB1739	**PF0504**
MDB1741	**PF0260**
MDB1742	**PF0111**
MDB1744	**PF0529**
MDB1745	**PF0579**
MDB1754	**PF0287**
MDB1760	**PF0518**
MDB1783	**PF0785**
MDB1793	**PF0393**
MDB1802	**PF0524**
MDB1804	**PF0390**
MDB1805	**PF0388**
MDB1806	**PF0166**
MDB1808	**PF0196**
MDB1811	**PF0515**
MDB1812	**PF0786**
MDB1813	**PF0360**
MDB1814	**PF0418**
MDB1815	**PF0192**
MDB1817	**PF0159**
MDB1818	**PF0344**
MDB1822	**PF0415**
MDB1823	**PF0810**
MDB1826	**PF0143**
MDB1828	**PF0782**
MDB1829	**PF0104**
MDB1831	**PF0336**
MDB1832	**PF0519**

IAM	MAGNETI MARELLI
MINTEX	
MDB1834	**PF0482**
MDB1837	**PF0200**
MDB1842	**PF0247**
MDB1845	**PF0342**
MDB1855	**PF0326**
MDB1858	**PF0297**
MDB1859	**PF0499**
MDB1866	**PF0461**
MDB1868	**PF0389**
MDB1871	**PF0315**
MDB1871	**PF0321**
MDB1872	**PF0391**
MDB1876	**PF0106**
MDB1877	**PF0107**
MDB1879	**PF0158**
MDB1883	**PF0248**
MDB1884	**PF0250**
MDB1888	**PF0157**
MDB1889	**PF0205**
MDB1892	**PF0532**
MDB1900	**PF0207**
MDB1901	**PF0155**
MDB1903	**PF0279**
MDB1907	**PF0164**
MDB1907	**PF0523**
MDB1908	**PF0355**
MDB1910	**PF0209**
MDB1912	**PF0229**
MDB1913	**PF0397**
MDB1914	**PF0816**
MDB1919	**PF0145**
MDB1924	**PF0301**
MDB1926	**PF0311**
MDB1934	**PF0112**
MDB1938	**PF0800**
MDB1940	**PF0386**
MDB1941	**PF0510**
MDB1943	**PF0543**
MDB1944	**PF0422**
MDB1945	**PF0534**
MDB1946	**PF0293**
MDB1948	**PF0232**
MDB1949	**PF0234**
MDB1950	**PF0113**
MDB1950	**PF0121**

IAM	MAGNETI MARELLI
MINTEX	
MDB1951	**PF0101**
MDB1952	**PF0542**
MDB1953	**PF0541**
MDB1954	**PF0539**
MDB1956	**PF0239**
MDB1956	**PF0240**
MDB1958	**PF0255**
MDB1959	**PF0253**
MDB1960	**PF0512**
MDB1967	**PF0327**
MDB1968	**PF0555**
MDB1987	**PF0471**
MDB1989	**PF0566**
MDB1991	**PF0553**
MDB1993	**PF0544**
MDB1995	**PF0335**
MDB1997	**PF0319**
MDB2000	**PF0268**
MDB2002	**PF0328**
MDB2003	**PF0549**
MDB2004	**PF0152**
MDB2006	**PF0533**
MDB2012	**PF0537**
MDB2013	**PF0493**
MDB2014	**PF0593**
MDB2026	**PF0283**
MDB2029	**PF0592**
MDB2033	**PF0398**
MDB2034	**PF0134**
MDB2035	**PF0466**
MDB2036	**PF0278**
MDB2040	**PF0132**
MDB2040	**PF0516**
MDB2041	**PF0136**
MDB2042	**PF0216**
MDB2043	**PF0702**
MDB2049	**PF0476**
MDB2050	**PF0458**
MDB2051	**PF0109**
MDB2055	**PF0513**
MDB2057	**PF0411**
MDB2059	**PF0251**
MDB2061	**PF0556**
MDB2062	**PF0266**
MDB2063	**PF0282**

IAM	MAGNETI MARELLI
MINTEX	
MDB2064	**PF0320**
MDB2067	**PF0199**
MDB2068	**PF0103**
MDB2070	**PF0312**
MDB2071	**PF0584**
MDB2072	**PF0548**
MDB2073	**PF0362**
MDB2074	**PF0377**
MDB2075	**PF0138**
MDB2076	**PF0227**
MDB2078	**PF0271**
MDB2080	**PF0340**
MDB2081	**PF0265**
MDB2089	**PF0498**
MDB2095	**PF0416**
MDB2096	**PF0258**
MDB2102	**PF0261**
MDB2104	**PF0419**
MDB2105	**PF0420**
MDB2111	**PF0308**
MDB2115	**PF0598**
MDB2117	**PF0567**
MDB2118	**PF0259**
MDB2123	**PF0238**
MDB2127	**PF0531**
MDB2130	**PF0357**
MDB2131	**PF0201**
MDB2132	**PF0108**
MDB2144	**PF0343**
MDB2146	**PF0535**
MDB2147	**PF0443**
MDB2155	**PF0577**
MDB2157	**PF0183**
MDB2158	**PF0185**
MDB2159	**PF0371**
MDB2162	**PF0332**
MDB2163	**PF0574**
MDB2168	**PF0552**
MDB2174	**PF0496**
MDB2177	**PF0528**
MDB2183	**PF0170**
MDB2186	**PF0176**
MDB2187	**PF0181**
MDB2188	**PF0564**
MDB2189	**PF0565**

IAM	MAGNETI MARELLI
MINTEX	
MDB2190	**PF0180**
MDB2192	**PF0204**
MDB2223	**PF0356**
MDB2223	**PF0358**
MDB2225	**PF0383**
MDB2226	**PF0384**
MDB2227	**PF0580**
MDB2231	**PF0142**
MDB2238	**PF0125**
MDB2239	**PF0123**
MDB2239	**PF0126**
MDB2240	**PF0214**
MDB2241	**PF0124**
MDB2241	**PF0563**
MDB2247	**PF0683**
MDB2253	**PF0173**
MDB2254	**PF0587**
MDB2257	**PF0408**
MDB2258	**PF0370**
MDB2261	**PF0350**
MDB2262	**PF0162**
MDB2266	**PF0597**
MDB2267	**PF0277**
MDB2268	**PF0366**
MDB2269	**PF0365**
MDB2270	**PF0621**
MDB2271	**PF0554**
MDB2272	**PF0256**
MDB2274	**PF0399**
MDB2278	**PF0396**
MDB2281	**PF0349**
MDB2282	**PF0434**
MDB2283	**PF0174**
MDB2294	**PF0575**
MDB2295	**PF0338**
MDB2308	**PF0295**
MDB2309	**PF0294**
MDB2314	**PF0252**
MDB2326	**PF0490**
MDB2327	**PF0380**
MDB2328	**PF0186**
MDB2329	**PF0187**
MDB2336	**PF0607**
MDB2353	**PF0146**
MDB2362	**PF0289**

IAM	MAGNETI MARELLI
MINTEX	
MDB2526	**PF0237**
MDB2531	**PF0182**
MDB2538	**PF0576**
MDB2539	**PF0318**
MDB2540	**PF0188**
MDB2542	**PF0469**
MDB2544	**PF0603**
MDB2545	**PF0402**
MDB2546	**PF0403**
MDB2547	**PF0612**
MDB2553	**PF0409**
MDB2563	**PF0206**
MDB2566	**PF0444**
MDB2566	**PF0442**
MDB2569	**PF0737**
MDB2571	**PF0526**
MDB2576	**PF0679**
MDB2580	**PF0133**
MDB2580	**PF0601**
MDB2584	**PF0538**
MDB2585	**PF0447**
MDB2587	**PF0316**
MDB2590	**PF0448**
MDB2591	**PF0600**
MDB2593	**PF0557**
MDB2595	**PF0347**
MDB2596	**PF0407**
MDB2598	**PF0585**
MDB2599	**PF0691**
MDB2600	**PF0571**
MDB2603	**PF0546**
MDB2604	**PF0135**
MDB2605	**PF0472**
MDB2608	**PF0281**
MDB2609	**PF0410**
MDB2612	**PF0285**
MDB2613	**PF0681**
MDB2615	**PF0235**
MDB2620	**PF0153**
MDB2622	**PF0595**
MDB2624	**PF0114**
MDB2625	**PF0262**
MDB2632	**PF0802**
MDB2633	**PF0364**
MDB2634	**PF0244**

IAM	MAGNETI MARELLI
MINTEX	
MDB2637	**PF0163**
MDB2638	**PF0412**
MDB2639	**PF0331**
MDB2642	**PF0413**
MDB2643	**PF0517**
MDB2644	**PF0558**
MDB2648	**PF0605**
MDB2655	**PF0215**
MDB2655	**PF0236**
MDB2656	**PF0291**
MDB2663	**PF0228**
MDB2664	**PF0414**
MDB2671	**PF0309**
MDB2672	**PF0178**
MDB2673	**PF0602**
MDB2675	**PF0589**
MDB2676	**PF0421**
MDB2677	**PF0606**
MDB2678	**PF0329**
MDB2678	**PF0617**
MDB2679	**PF0330**
MDB2681	**PF0148**
MDB2683	**PF0149**
MDB2684	**PF0622**
MDB2685	**PF0302**
MDB2686	**PF0243**
MDB2686	**PF0431**
MDB2689	**PF0137**
MDB2690	**PF0465**
MDB2691	**PF0267**
MDB2692	**PF0160**
MDB2693	**PF0179**
MDB2694	**PF0609**
MDB2699	**PF0507**
MDB2700	**PF0615**
MDB2701	**PF0376**
MDB2702	**PF0616**
MDB2707	**PF0596**
MDB2708	**PF0791**
MDB2709	**PF0450**
MDB2717	**PF0486**
MDB2718	**PF0495**
MDB2719	**PF0161**
MDB2720	**PF0280**
MDB2723	**PF0400**

IAM	MAGNETI MARELLI
MINTEX	
MDB2725	**PF0590**
MDB2726	**PF0640**
MDB2728	**PF0638**
MDB2729	**PF0639**
MDB2732	**PF0700**
MDB2733	**PF0698**
MDB2734	**PF0701**
MDB2743	**PF0172**
MDB2746	**PF0613**
MDB2747	**PF0637**
MDB2749	**PF0608**
MDB2754	**PF0224**
MDB2762	**PF0655**
MDB2769	**PF0404**
MDB2774	**PF0494**
MDB2776	**PF0628**
MDB2777	**PF0767**
MDB2778	**PF0439**
MDB2779	**PF0230**
MDB2785	**PF0663**
MDB2786	**PF0632**
MDB2787	**PF0633**
MDB2788	**PF0641**
MDB2789	**PF0824**
MDB2790	**PF0115**
MDB2791	**PF0620**
MDB2792	**PF0693**
MDB2795	**PF0324**
MDB2796	**PF0353**
MDB2797	**PF0241**
MDB2799	**PF0745**
MDB2800	**PF0225**
MDB2801	**PF0583**
MDB2802	**PF0300**
MDB2803	**PF0298**
MDB2804	**PF0647**
MDB2805	**PF0299**
MDB2816	**PF0619**
MDB2821	**PF0317**
MDB2827	**PF0760**
MDB2830	**PF0313**
MDB2831	**PF0653**
MDB2831	**PF0654**
MDB2837	**PF0369**
MDB2845	**PF0314**

IAM	MAGNETI MARELLI
MINTEX	
MDB2846	**PF0189**
MDB2847	**PF0695**
MDB2848	**PF0190**
MDB2849	**PF0797**
MDB2850	**PF0191**
MDB2851	**PF0272**
MDB2852	**PF0648**
MDB2853	**PF0273**
MDB2854	**PF0361**
MDB2856	**PF0290**
MDB2860	**PF0263**
MDB2863	**PF0264**
MDB2865	**PF0725**
MDB2867	**PF0690**
MDB2869	**PF0724**
MDB2870	**PF0723**
MDB2871	**PF0363**
MDB2875	**PF0254**
MDB2882	**PF0337**
MDB2883	**PF0381**
MDB2884	**PF0454**
MDB2884	**PF0455**
MDB2884	**PF0572**
MDB2887	**PF0257**
MDB2888	**PF0658**
MDB2890	**PF0169**
MDB2891	**PF0644**
MDB2892	**PF0177**
MDB2895	**PF0561**
MDB2900	**PF0618**
MDB2901	**PF0193**
MDB2903	**PF0194**
MDB2907	**PF0649**
MDB2908	**PF0284**
MDB2914	**PF0631**
MDB2917	**PF0650**
MDB2918	**PF0573**
MDB2923	**PF0664**
MDB2924	**PF0666**
MDB2925	**PF0629**
MDB2929	**PF0141**
MDB2930	**PF0626**
MDB2932	**PF0668**
MDB2933	**PF0665**
MDB2934	**PF0140**

IAM	MAGNETI MARELLI
MINTEX	
MDB2935	**PF0699**
MDB2938	**PF0351**
MDB2939	**PF0799**
MDB2946	**PF0703**
MDB2950	**PF0373**
MDB2952	**PF0139**
MDB2955	**PF0706**
MDB2956	**PF0627**
MDB2960	**PF0150**
MDB2961	**PF0487**
MDB2962	**PF0545**
MDB2963	**PF0661**
MDB2964	**PF0660**
MDB2965	**PF0670**
MDB2967	**PF0696**
MDB2968	**PF0818**
MDB2972	**PF0441**
MDB2973	**PF0659**
MDB2976	**PF0127**
MDB2978	**PF0171**
MDB2986	**PF0738**
MDB3001	**PF0288**
MDB3004	**PF0211**
MDB3005	**PF0210**
MDB3007	**PF0508**
MDB3013	**PF0323**
MDB3017	**PF0147**
MDB3023	**PF0754**
MDB3025	**PF0697**
MDB3027	**PF0751**
MDB3029	**PF0382**
MDB3030	**PF0672**
MDB3031	**PF0784**
MDB3036	**PF0686**
MDB3037	**PF0423**
MDB3042	**PF0474**
MDB3043	**PF0429**
MDB3044	**PF0671**
MDB3052	**PF0781**
MDB3057	**PF0801**
MDB3062	**PF0630**
MDB3063	**PF0707**
MDB3072	**PF0470**
MDB3086	**PF0675**
MDB3088	**PF0694**

IAM	MAGNETI MARELLI
MINTEX	
MDB3089	**PF0424**
MDB3092	**PF0582**
MDB3100	**PF0714**
MDB3101	**PF0713**
MDB3104	**PF0636**
MDB3106	**PF0151**
MDB3107	**PF0645**
MDB3112	**PF0559**
MDB3114	**PF0634**
MDB3117	**PF0502**
MDB3120	**PF0426**
MDB3121	**PF0128**
MDB3123	**PF0129**
MDB3125	**PF0425**
MDB3133	**PF0581**
MDB3134	**PF0464**
MDB3138	**PF0501**
MDB3141	**PF0756**
MDB3148	**PF0570**
MDB3150	**PF0820**
MDB3155	**PF0562**
MDB3168	**PF0646**
MDB3174	**PF0753**
MDB3182	**PF0433**
MDB3183	**PF0610**
MDB3186	**PF0594**
MDB3189	**PF0676**
MDB3190	**PF0674**
MDB3193	**PF0560**
MDB3204	**PF0503**
MDB3206	**PF0736**
MDB3207	**PF0591**
MDB3208	**PF0427**
MDB3213	**PF0687**
MDB3214	**PF0511**
MDB3233	**PF0428**
MDB3234	**PF0662**
MDB3242	**PF0734**
MDB3246	**PF0735**
MDB3252	**PF0750**
MDB3276	**PF0766**
MDB3291	**PF0798**
MDB3292	**PF0710**
MDB3293	**PF0711**
MDB3294	**PF0821**

IAM	MAGNETI MARELLI
MINTEX	
MDB3298	**PF0643**
MDB3303	**PF0568**
MDB3317	**PF0453**
MDB3322	**PF0712**
MDB3331	**PF0688**
MDB3332	**PF0689**
MDB3334	**PF0708**
MDB3336	**PF0678**
MDB3340	**PF0715**
MDB3340	**PF0716**
MDB3360	**PF0717**
MDB3364	**PF0743**
MDB3365	**PF0642**
MDB3369	**PF0741**
MDB3370	**PF0740**
MDB3375	**PF0718**
MDB3380	**PF0822**
MDB3396	**PF0473**
MDB3405	**PF0599**
PAGID	
C2014	**PF0530**
C3016	**PF0300**
C4026	**PF0547**
C4030	**PF0283**
C4064	**PF0434**
C4068	**PF0324**
C4070	**PF0477**
C4074	**PF0526**
C4076	**PF0474**
C6010	**PF0475**
C6018	**PF0476**
C6023	**PF0649**
C6024	**PF0298**
C6026	**PF0647**
C6027	**PF0299**
C6029	**PF0284**
C6030	**PF0480**
C9005	**PF0650**
T0013	**PF0815**
T0032	**PF0491**
T0034	**PF0457**
T0221	**PF0105**
T0290	**PF0175**
T0311	**PF0325**

IAM	MAGNETI MARELLI
PAGID	
T0318	**PF0405**
T0352	**PF0305**
T0366	**PF0459**
T0375	**PF0354**
T0388	**PF0393**
T0389	**PF0269**
T0624	**PF0212**
T1004	**PF0304**
T1005	**PF0249**
T1010	**PF0306**
T1015	**PF0367**
T1016	**PF0368**
T1030	**PF0807**
T1034	**PF0359**
T1035	**PF0130**
T1038	**PF0375**
T1038	**PF0482**
T1039	**PF0154**
T1045	**PF0208**
T1050	**PF0303**
T1062	**PF0245**
T1065	**PF0385**
T1075	**PF0195**
T1082	**PF0205**
T1085	**PF0360**
T1089	**PF0788**
T1090	**PF0165**
T1091	**PF0310**
T1093	**PF0146**
T1094	**PF0388**
T1095	**PF0102**
T1097	**PF0390**
T1098	**PF0222**
T1099	**PF0101**
T1100	**PF0785**
T1103	**PF0159**
T1104	**PF0158**
T1106	**PF0260**
T1107	**PF0418**
T1110	**PF0137**
T1111	**PF0504**
T1112	**PF0386**
T1113	**PF0250**
T1114	**PF0782**
T1117	**PF0152**

IAM	MAGNETI MARELLI
PAGID	
T1120	**PF0485**
T1125	**PF0326**
T1133	**PF0287**
T1136	**PF0579**
T1137	**PF0196**
T1138	**PF0166**
T1139	**PF0297**
T1140	**PF0104**
T1141	**PF0248**
T1143	**PF0391**
T1146	**PF0229**
T1147	**PF0235**
T1148	**PF0234**
T1149	**PF0143**
T1150	**PF0112**
T1151	**PF0239**
T1152	**PF0553**
T1153	**PF0311**
T1154	**PF0136**
T1156	**PF0411**
T1161	**PF0232**
T1163	**PF0132**
T1163	**PF0516**
T1164	**PF0355**
T1165	**PF0134**
T1166	**PF0118**
T1167	**PF0255**
T1168	**PF0327**
T1169	**PF0328**
T1170	**PF0319**
T1174	**PF0320**
T1175	**PF0584**
T1176	**PF0398**
T1177	**PF0155**
T1178	**PF0157**
T1179	**PF0539**
T1189	**PF0422**
T1190	**PF0543**
T1192	**PF0251**
T1193	**PF0252**
T1194	**PF0261**
T1196	**PF0419**
T1202	**PF0153**
T1204	**PF0535**
T1210	**PF0266**

IAM	MAGNETI MARELLI
PAGID	
T1211	**PF0265**
T1212	**PF0384**
T1213	**PF0383**
T1214	**PF0571**
T1215	**PF0349**
T1218	**PF0607**
T1220	**PF0332**
T1223	**PF0609**
T1225	**PF0364**
T1226	**PF0240**
T1233	**PF0580**
T1234	**PF0162**
T1236	**PF0587**
T1240	**PF0109**
T1242	**PF0279**
T1245	**PF0201**
T1246	**PF0365**
T1247	**PF0612**
T1250	**PF0342**
T1260	**PF0216**
T1261	**PF0256**
T1263	**PF0461**
T1269	**PF0471**
T1274	**PF0338**
T1275	**PF0534**
T1276	**PF0340**
T1281	**PF0577**
T1284	**PF0702**
T1287	**PF0396**
T1295	**PF0538**
T1305	**PF0278**
T1307	**PF0282**
T1310	**PF0366**
T1318	**PF0585**
T1324	**PF0173**
T1326	**PF0238**
T1330	**PF0493**
T1331	**PF0399**
T1332	**PF0597**
T1335	**PF0458**
T1343	**PF0598**
T1345	**PF0227**
T1348	**PF0309**
T1350	**PF0606**
T1351	**PF0131**

IAM	MAGNETI MARELLI
PAGID	
T1352	PF0531
T1354	PF0186
T1355	PF0187
T1356	PF0188
T1366	PF0161
T1367	PF0469
T1368	PF0409
T1369	PF0182
T1371	PF0578
T1372	PF0557
T1373	PF0380
T1374	PF0600
T1376	PF0135
T1377	PF0133
T1378	PF0281
T1380	PF0262
T1382	PF0329
T1382	PF0617
T1383	PF0330
T1388	PF0142
T1389	PF0737
T1390	PF0370
T1392	PF0442
T1393	PF0410
T1394	PF0681
T1395	PF0285
T1396	PF0472
T1397	PF0691
T1398	PF0407
T1399	PF0347
T1401	PF0448
T1409	PF0206
T1410	PF0602
T1412	PF0277
T1418	PF0595
T1422	PF0174
T1423	PF0490
T1424	PF0371
T1428	PF0294
T1429	PF0295
T1432	PF0413
T1436	PF0244
T1439	PF0103
T1440	PF0291
T1442	PF0236

IAM	MAGNETI MARELLI
PAGID	
T1443	PF0163
T1445	PF0148
T1446	PF0622
T1447	PF0149
T1448	PF0156
T1449	PF0228
T1450	PF0331
T1451	PF0358
T1452	PF0302
T1454	PF0317
T1455	PF0640
T1456	PF0499
T1457	PF0414
T1461	PF0376
T1462	PF0615
T1463	PF0616
T1466	PF0596
T1468	PF0170
T1469	PF0412
T1472	PF0466
T1481	PF0603
T1486	PF0450
T1487	PF0605
T1488	PF0679
T1489	PF0243
T1491	PF0496
T1492	PF0601
T1494	PF0486
T1495	PF0178
T1496	PF0179
T1501	PF0558
T1508	PF0447
T1509	PF0507
T1511	PF0566
T1516	PF0639
T1520	PF0791
T1526	PF0465
T1530	PF0308
T1531	PF0172
T1532	PF0590
T1533	PF0468
T1534	PF0267
T1538	PF0613
T1541	PF0637
T1543	PF0700

IAM	MAGNETI MARELLI
PAGID	
T1547	PF0608
T1552	PF0280
T1553	PF0745
T1562	PF0655
T1564	PF0521
T1566	PF0404
T1569	PF0621
T1570	PF0224
T1577	PF0348
T1578	PF0242
T1580	PF0663
T1581	PF0632
T1582	PF0633
T1584	PF0824
T1585	PF0115
T1586	PF0620
T1587	PF0421
T1591	PF0698
T1592	PF0701
T1593	PF0638
T1594	PF0353
T1596	PF0583
T1600	PF0494
T1602	PF0767
T1603	PF0439
T1604	PF0230
T1605	PF0641
T1606	PF0225
T1610	PF0400
T1613	PF0431
T1616	PF0241
T1619	PF0760
T1622	PF0313
T1624	PF0653
T1625	PF0693
T1631	PF0369
T1637	PF0314
T1640	PF0272
T1641	PF0648
T1642	PF0273
T1647	PF0361
T1648	PF0126
T1649	PF0290
T1653	PF0263
T1654	PF0695

IAM	MAGNETI MARELLI
PAGID	
T1655	**PF0191**
T1656	**PF0190**
T1657	**PF0189**
T1658	**PF0264**
T1660	**PF0725**
T1662	**PF0555**
T1663	**PF0690**
T1664	**PF0797**
T1668	**PF0724**
T1669	**PF0723**
T1678	**PF0443**
T1679	**PF0683**
T1687	**PF0254**
T1688	**PF0337**
T1690	**PF0572**
T1693	**PF0381**
T1695	**PF0802**
T1696	**PF0257**
T1699	**PF0658**
T1701	**PF0169**
T1702	**PF0644**
T1703	**PF0177**
T1704	**PF0561**
T1707	**PF0618**
T1708	**PF0193**
T1710	**PF0194**
T1716	**PF0631**
T1726	**PF0664**
T1727	**PF0666**
T1728	**PF0629**
T1731	**PF0799**
T1733	**PF0703**
T1736	**PF0141**
T1738	**PF0626**
T1746	**PF0668**
T1748	**PF0140**
T1749	**PF0699**
T1751	**PF0351**
T1760	**PF0139**
T1763	**PF0706**
T1764	**PF0627**
T1766	**PF0373**
T1770	**PF0150**
T1771	**PF0487**
T1773	**PF0661**

IAM	MAGNETI MARELLI
PAGID	
T1774	**PF0660**
T1775	**PF0670**
T1777	**PF0696**
T1778	**PF0818**
T1782	**PF0441**
T1783	**PF0659**
T1786	**PF0127**
T1788	**PF0171**
T1797	**PF0738**
T1808	**PF0288**
T1815	**PF0211**
T1816	**PF0210**
T1818	**PF0508**
T1824	**PF0323**
T1826	**PF0322**
T1827	**PF0147**
T1832	**PF0215**
T1835	**PF0321**
T1844	**PF0754**
T1846	**PF0697**
T1848	**PF0751**
T1850	**PF0382**
T1851	**PF0672**
T1852	**PF0784**
T1865	**PF0686**
T1866	**PF0423**
T1883	**PF0113**
T1894	**PF0429**
T1895	**PF0671**
T1904	**PF0781**
T1905	**PF0665**
T1909	**PF0801**
T1921	**PF0630**
T1922	**PF0707**
T1926	**PF0160**
T1933	**PF0470**
T1955	**PF0675**
T1957	**PF0433**
T1958	**PF0694**
T1959	**PF0424**
T1962	**PF0582**
T1976	**PF0714**
T1977	**PF0713**
T1987	**PF0636**
T1989	**PF0151**

IAM	MAGNETI MARELLI
PAGID	
T1990	**PF0645**
T1995	**PF0559**
T1997	**PF0634**
T2000	**PF0502**
T2010	**PF0128**
T2011	**PF0129**
T2014	**PF0425**
T2029	**PF0581**
T2030	**PF0464**
T2038	**PF0501**
T2041	**PF0756**
T2048	**PF0570**
T2050	**PF0820**
T2054	**PF0562**
T2067	**PF0646**
T2075	**PF0753**
T2084	**PF0610**
T2087	**PF0594**
T2091	**PF0674**
T2093	**PF0676**
T2094	**PF0619**
T2097	**PF0560**
T2108	**PF0503**
T2110	**PF0736**
T2111	**PF0591**
T2112	**PF0427**
T2139	**PF0428**
T2140	**PF0662**
T2149	**PF0734**
T2152	**PF0735**
T2194	**PF0710**
T2195	**PF0711**
T2196	**PF0821**
T2201	**PF0643**
T2207	**PF0568**
T2216	**PF0453**
T2223	**PF0712**
T2232	**PF0688**
T2233	**PF0689**
T2237	**PF0678**
T2239	**PF0715**
T2239	**PF0716**
T2243	**PF0708**
T2260	**PF0717**
T2262	**PF0743**

IAM	MAGNETI MARELLI
PAGID	
T2264	PF0642
T2269	PF0741
T2270	PF0740
T2275	PF0718
T2280	PF0822
T2284	PF0677
T2294	PF0473
T2307	PF0599
T3011	PF0401
T3013	PF0406
T3014	PF0286
T3016	PF0274
T3017	PF0462
T3018	PF0275
T3019	PF0341
T3022	PF0346
T3024	PF0276
T3025	PF0339
T3034	PF0497
T3037	PF0352
T3038	PF0343
T3039	PF0520
T3040	PF0334
T3041	PF0467
T3044	PF0509
T3064	PF0705
T3076	PF0635
T3089	PF0532
T3092	PF0549
T3093	PF0164
T3095	PF0335
T3096	PF0800
T3098	PF0533
T3099	PF0592
T3103	PF0209
T3106	PF0207
T3107	PF0460
T3111	PF0567
T3114	PF0519
T3117	PF0593
T3120	PF0408
T3121	PF0548
T3123	PF0810
T3124	PF0293
T3129	PF0402

IAM	MAGNETI MARELLI
PAGID	
T3130	PF0403
T3136	PF0687
T3137	PF0511
T3139	PF0750
T4150	PF0395
T4151	PF0394
T4154	PF0392
T5022	PF0144
T5032	PF0117
T5046	PF0226
T5047	PF0119
T5048	PF0488
T5050	PF0806
T5054	PF0397
T5056	PF0116
T5058	PF0122
T5064	PF0345
T5065	PF0484
T5066	PF0415
T5072	PF0417
T5074	PF0167
T5075	PF0444
T5077	PF0203
T5078	PF0789
T5079	PF0184
T5084	PF0787
T5090	PF0374
T5092	PF0202
T5095	PF0389
T5098	PF0145
T5099	PF0786
T5100	PF0336
T5101	PF0301
T5102	PF0111
T5112	PF0312
T5113	PF0121
T5114	PF0783
T5118	PF0253
T5119	PF0107
T5121	PF0344
T5122	PF0138
T5128	PF0362
T5129	PF0416
T5131	PF0199
T5135	PF0258

IAM	MAGNETI MARELLI
PAGID	
T5137	PF0420
T5138	PF0259
T5140	PF0528
T5143	PF0552
T5146	PF0498
T5154	PF0318
T5155	PF0316
T5156	PF0289
T5157	PF0114
T5158	PF0356
T5159	PF0185
T5160	PF0575
T5161	PF0576
T5162	PF0123
T5163	PF0214
T5164	PF0124
T5164	PF0563
T5165	PF0125
T5167	PF0176
T5168	PF0517
T5170	PF0183
T6064	PF0378
T6065	PF0197
T6088	PF0372
T9003	PF0237
T9012	PF0246
T9021	PF0223
T9029	PF0168
T9030	PF0217
T9030	PF0218
T9031	PF0219
T9031	PF0220
T9033	PF0817
T9038	PF0198
T9054	PF0192
T9062	PF0816
T9066	PF0357
T9069	PF0247
T9070	PF0514
T9073	PF0200
T9075	PF0544
T9096	PF0537
T9098	PF0556
T9099	PF0268
T9100	PF0270

IAM	MAGNETI MARELLI
PAGID	
T9101	**PF0377**
T9103	**PF0181**
T9104	**PF0564**
T9105	**PF0565**
T9106	**PF0180**
T9107	**PF0271**
RAICAM	
0109.0	**PF0794**
0109.1	**PF0805**
0110.0	**PF0793**
0120.0	**PF0814**
0130.0	**PF0813**
0150.0	**PF0792**
0193.2	**PF0354**
0198.1	**PF0325**
0219.4	**PF0248**
0222.1	**PF0105**
0239.0	**PF0175**
0250.0	**PF0212**
0250.1	**PF0237**
0256.0	**PF0385**
0256.2	**PF0378**
0257.2	**PF0197**
0258.0	**PF0397**
0285.0	**PF0372**
0285.1	**PF0168**
0291.0	**PF0394**
0291.1	**PF0392**
0291.2	**PF0393**
0292.0	**PF0395**
0306.0	**PF0342**
0307.0	**PF0439**
0309.0	**PF0116**
0310.2	**PF0806**
0312.0	**PF0304**
0312.1	**PF0306**
0318.1	**PF0249**
0318.3	**PF0232**
0318.4	**PF0233**
0318.8	**PF0427**
0318.9	**PF0440**
0321.0	**PF0783**
0331.1	**PF0807**
0331.3	**PF0234**

IAM	MAGNETI MARELLI
RAICAM	
0331.4	**PF0229**
0331.8	**PF0235**
0332.0	**PF0291**
0332.2	**PF0290**
0343.1	**PF0166**
0346.0	**PF0441**
0348.0	**PF0131**
0348.1	**PF0144**
0348.2	**PF0259**
0348.3	**PF0442**
0348.4	**PF0432**
0348.5	**PF0443**
0348.6	**PF0444**
0348.7	**PF0348**
0352.0	**PF0117**
0352.2	**PF0122**
0352.3	**PF0787**
0370.0	**PF0165**
0372.1	**PF0226**
0384.2	**PF0250**
0387.0	**PF0158**
0388.0	**PF0817**
0388.3	**PF0377**
0389.0	**PF0368**
0389.1	**PF0367**
0390.1	**PF0167**
0395.1	**PF0205**
0396.0	**PF0359**
0398.0	**PF0246**
0398.1	**PF0247**
0399.0	**PF0799**
0400.0	**PF0119**
0402.0	**PF0305**
0411.0	**PF0802**
0415.0	**PF0340**
0415.1	**PF0445**
0418.0	**PF0223**
0419.0	**PF0230**
0419.2	**PF0446**
0420.0	**PF0447**
0421.0	**PF0448**
0422.0	**PF0449**
0424.0	**PF0450**
0427.0	**PF0208**
0428.0	**PF0142**

IAM	MAGNETI MARELLI
RAICAM	
0428.1	**PF0421**
0429.0	**PF0130**
0429.1	**PF0260**
0429.2	**PF0261**
0429.3	**PF0136**
0429.4	**PF0146**
0429.5	**PF0143**
0429.6	**PF0137**
0430.1	**PF0415**
0430.2	**PF0416**
0436.1	**PF0155**
0437.0	**PF0815**
0438.0	**PF0198**
0445.0	**PF0236**
0445.1	**PF0215**
0446.0	**PF0218**
0446.0E	**PF0217**
0446.1	**PF0219**
0446.1E	**PF0220**
0446.3	**PF0453**
0446.5	**PF0454**
0446.8	**PF0455**
0446.9	**PF0456**
0447.0	**PF0268**
0447.1	**PF0269**
0448.0	**PF0245**
0453.0	**PF0457**
0454.0	**PF0276**
0456.0	**PF0458**
0457.1	**PF0459**
0459.0	**PF0460**
0460.0	**PF0461**
0460.1	**PF0462**
0460.2	**PF0463**
0460.3	**PF0464**
0462.0	**PF0270**
0473.0	**PF0286**
0474.0	**PF0465**
0475.0	**PF0295**
0476.0	**PF0294**
0481.0	**PF0307**
0487.0	**PF0281**
0494.0	**PF0466**
0501.0	**PF0467**
0501.1	**PF0468**

IAM	MAGNETI MARELLI
RAICAM	
0503.0	PF0469
0506.0	PF0470
0506.1	PF0471
0508.0	PF0472
0512.0	PF0280
0513.0	PF0303
0515.0	PF0203
0515.1	PF0204
0517.0	PF0277
0519.0	PF0346
0523.0	PF0344
0526.0	PF0473
0526.1	PF0350
0528.0	PF0434
0528.1	PF0474
0529.0	PF0475
0529.2	PF0476
0530.0	PF0477
0530.1	PF0478
0530.2	PF0479
0530.3	PF0480
0530.4	PF0481
0532.0	PF0285
0537.0	PF0195
0537.1	PF0196
0539.0	PF0375
0539.1	PF0482
0539.2	PF0326
0542.0	PF0407
0551.0	PF0484
0554.0	PF0485
0554.1	PF0152
0554.3	PF0161
0554.4	PF0486
0554.5	PF0487
0555.0	PF0488
0559.0	PF0399
0561.0	PF0490
0563.0	PF0491
0567.0	PF0402
0568.0	PF0403
0570.0	PF0492
0570.1	PF0292
0572.0	PF0493
0574.0	PF0408

IAM	MAGNETI MARELLI
RAICAM	
0575.0	PF0405
0578.0	PF0494
0580.2	PF0401
0580.3	PF0495
0589.0	PF0296
0591.0	PF0339
0591.1	PF0496
0592.0	PF0341
0594.0	PF0338
0597.0	PF0345
0601.0	PF0497
0604.0	PF0113
0604.1	PF0498
0604.2	PF0121
0604.3	PF0110
0604.4	PF0499
0604.6	PF0500
0604.7	PF0501
0604.8	PF0502
0606.0	PF0154
0608.1	PF0790
0609.0	PF0216
0609.1	PF0503
0612.0	PF0782
0612.1	PF0239
0612.2	PF0240
0612.3	PF0222
0614.0	PF0104
0614.1	PF0238
0614.2	PF0102
0615.0	PF0101
0615.1	PF0118
0615.2	PF0103
0616.0	PF0242
0616.1	PF0788
0617.0	PF0789
0617.1	PF0183
0618.0	PF0184
0618.1	PF0185
0619.0	PF0192
0620.0	PF0111
0621.0	PF0374
0622.0	PF0202
0623.0	PF0390
0623.1	PF0388

IAM	MAGNETI MARELLI
RAICAM	
0623.2	PF0391
0623.3	PF0396
0624.0	PF0406
0626.0	PF0112
0626.1	PF0108
0627.0	PF0504
0627.1	PF0321
0628.0	PF0322
0629.0	PF0505
0629.1	PF0506
0629.3	PF0323
0632.0	PF0159
0632.1	PF0160
0632.2	PF0153
0632.3	PF0507
0632.4	PF0508
0632.7	PF0156
0633.0	PF0310
0635.0	PF0509
0643.0	PF0800
0644.0	PF0164
0645.0	PF0510
0645.1	PF0207
0646.0	PF0206
0647.0	PF0163
0647.1	PF0511
0650.0	PF0106
0652.0	PF0200
0652.1	PF0512
0652.2	PF0513
0652.3	PF0514
0653.0	PF0515
0653.1	PF0134
0653.2	PF0516
0653.3	PF0132
0654.0	PF0315
0655.0	PF0786
0655.1	PF0199
0656.0	PF0301
0656.1	PF0517
0657.0	PF0343
0658.0	PF0518
0659.0	PF0519
0660.0	PF0520
0661.0	PF0334

IAM	MAGNETI MARELLI
RAICAM	
0661.1	PF0521
0662.0	PF0336
0662.1	PF0522
0663.0	PF0355
0664.0	PF0523
0665.0	PF0357
0666.0	PF0524
0666.1	PF0525
0666.2	PF0324
0667.0	PF0283
0667.1	PF0526
0667.8	PF0527
0668.0	PF0417
0668.1	PF0528
0669.0	PF0418
0669.1	PF0419
0670.0	PF0529
0672.0	PF0816
0673.0	PF0360
0674.0	PF0386
0675.0	PF0530
0676.0	PF0531
0678.0	PF0532
0679.0	PF0533
0680.0	PF0255
0681.0	PF0253
0682.0	PF0398
0683.0	PF0534
0684.0	PF0411
0684.1	PF0535
0684.2	PF0536
0686.0	PF0537
0686.1	PF0538
0687.0	PF0539
0687.1	PF0262
0687.2	PF0540
0688.0	PF0319
0689.0	PF0201
0690.0	PF0541
0690.1	PF0542
0690.2	PF0370
0691.0	PF0265
0693.0	PF0422
0694.0	PF0543
0695.0	PF0389

IAM	MAGNETI MARELLI
RAICAM	
0695.1	PF0145
0695.2	PF0138
0696.0	PF0335
0698.0	PF0157
0699.0	PF0274
0700.0	PF0109
0702.0	PF0544
0703.0	PF0352
0704.0	PF0227
0704.1	PF0545
0705.0	PF0546
0705.1	PF0547
0706.0	PF0810
0707.0	PF0251
0708.0	PF0252
0708.1	PF0404
0709.0	PF0548
0710.0	PF0549
0711.0	PF0550
0711.1	PF0266
0712.0	PF0551
0712.2	PF0362
0713.0	PF0552
0714.0	PF0327
0715.0	PF0328
0718.0	PF0785
0720.0	PF0287
0723.0	PF0170
0724.0	PF0176
0725.0	PF0174
0729.0	PF0209
0730.0	PF0333
0732.0	PF0293
0733.0	PF0282
0737.0	PF0311
0739.0	PF0297
0748.0	PF0275
0750.0	PF0553
0752.2	PF0107
0752.3	PF0554
0752.4	PF0555
0756.0	PF0556
0757.0	PF0271
0757.1	PF0557
0758.0	PF0380

IAM	MAGNETI MARELLI
RAICAM	
0760.0	PF0126
0760.1	PF0558
0760.2	PF0123
0760.3	PF0361
0760.4	PF0430
0760.7	PF0559
0760.8	PF0560
0761.0	PF0214
0761.1	PF0228
0761.2	PF0221
0761.3	PF0561
0761.8	PF0562
0762.0	PF0563
0762.2	PF0124
0763.0	PF0564
0764.0	PF0180
0765.0	PF0181
0766.0	PF0565
0767.0	PF0566
0767.1	PF0567
0768.0	PF0125
0768.3	PF0568
0769.0	PF0349
0769.1	PF0569
0769.2	PF0431
0769.3	PF0243
0769.4	PF0570
0769.5	PF0820
0769.6	PF0796
0769.7	PF0821
0770.0	PF0383
0770.1	PF0571
0770.2	PF0572
0773.0	PF0186
0774.0	PF0187
0775.0	PF0188
0775.2	PF0573
0776.0	PF0332
0777.0	PF0574
0777.1	PF0331
0778.0	PF0575
0778.1	PF0576
0780.0	PF0577
0781.0	PF0578
0782.0	PF0365

IAM	MAGNETI MARELLI
RAICAM	
0783.0	PF0366
0785.0	PF0256
0786.0	PF0312
0788.0	PF0579
0788.1	PF0580
0789.0	PF0151
0789.1	PF0581
0789.2	PF0582
0789.3	PF0150
0789.4	PF0583
0790.0	PF0584
0791.0	PF0320
0791.1	PF0585
0792.0	PF0410
0793.0	PF0258
0793.1	PF0420
0793.2	PF0586
0794.0	PF0173
0795.0	PF0587
0796.0	PF0182
0796.1	PF0224
0797.0	PF0162
0797.1	PF0588
0797.2	PF0369
0798.0	PF0289
0799.0	PF0114
0799.1	PF0425
0799.2	PF0803
0800.0	PF0371
0800.1	PF0589
0801.0	PF0590
0801.1	PF0127
0801.2	PF0591
0802.0	PF0308
0803.0	PF0592
0804.0	PF0593
0805.0	PF0347
0805.1	PF0353
0805.3	PF0594
0809.0	PF0595
0810.0	PF0596
0811.0	PF0597
0812.0	PF0598
0813.4	PF0599
0814.0	PF0600

IAM	MAGNETI MARELLI
RAICAM	
0815.0	PF0356
0815.1	PF0358
0816.0	PF0364
0817.0	PF0135
0817.1	PF0178
0818.0	PF0133
0818.1	PF0601
0819.0	PF0412
0819.1	PF0602
0819.2	PF0603
0820.0	PF0244
0820.1	PF0604
0821.0	PF0318
0822.0	PF0316
0823.0	PF0381
0823.1	PF0384
0824.0	PF0605
0824.1	PF0606
0824.2	PF0607
0824.3	PF0608
0824.4	PF0609
0824.5	PF0610
0824.6	PF0611
0825.0	PF0612
0833.0	PF0278
0836.0	PF0613
0838.0	PF0615
0839.0	PF0376
0840.0	PF0616
0841.0	PF0179
0842.0	PF0302
0843.0	PF0309
0844.0	PF0329
0844.1	PF0617
0845.0	PF0330
0846.0	PF0241
0847.0	PF0618
0848.0	PF0619
0850.0	PF0620
0851.0	PF0621
0852.2	PF0147
0853.0	PF0622
0854.0	PF0148
0854.2	PF0623
0855.0	PF0149

IAM	MAGNETI MARELLI
RAICAM	
0855.2	PF0624
0856.0	PF0279
0857.0	PF0413
0857.1	PF0625
0857.2	PF0414
0858.0	PF0172
0859.0	PF0115
0859.1	PF0128
0861.0	PF0626
0862.0	PF0627
0863.0	PF0628
0864.0	PF0629
0864.1	PF0630
0865.0	PF0631
0865.1	PF0798
0866.0	PF0632
0867.0	PF0633
0868.0	PF0634
0869.0	PF0635
0870.0	PF0636
0871.0	PF0409
0872.0	PF0637
0873.0	PF0638
0874.0	PF0639
0875.0	PF0640
0879.0	PF0313
0880.0	PF0314
0884.0	PF0641
0885.0	PF0189
0885.2	PF0642
0886.0	PF0190
0886.3	PF0643
0887.0	PF0191
0889.0	PF0169
0890.0	PF0644
0891.0	PF0177
0892.0	PF0272
0892.1	PF0645
0893.0	PF0273
0894.0	PF0263
0895.0	PF0257
0896.0	PF0264
0897.0	PF0267
0899.0	PF0646
0900.0	PF0298

IAM	MAGNETI MARELLI
RAICAM	
0901.0	PF0299
0902.0	PF0647
0903.0	PF0300
0904.0	PF0225
0905.0	PF0648
0906.0	PF0649
0906.1	PF0650
0907.0	PF0284
0909.0	PF0129
0911.0	PF0193
0912.0	PF0194
0913.0	PF0140
0914.0	PF0653
0914.1	PF0654
0915.0	PF0141
0917.0	PF0655
0919.0	PF0656
0919.1	PF0657
0920.0	PF0373
0921.0	PF0658
0922.0	PF0659
0922.1	PF0139
0923.0	PF0660
0924.0	PF0661
0924.1	PF0662
0925.0	PF0663
0926.0	PF0664
0927.0	PF0665
0928.0	PF0666
0929.0	PF0667
0929.1	PF0668
0929.2	PF0669
0930.0	PF0670
0930.1	PF0671
0930.2	PF0672
0931.0	PF0673
0931.1	PF0674
0931.2	PF0675
0931.3	PF0676
0933.0	PF0317
0934.0	PF0677
0935.0	PF0678
0936.0	PF0679
0937.0	PF0681
0939.0	PF0683

IAM	MAGNETI MARELLI
RAICAM	
0940.0	PF0254
0940.1	PF0684
0940.2	PF0818
0941.0	PF0382
0942.0	PF0429
0942.1	PF0426
0943.0	PF0288
0945.0	PF0171
0946.0	PF0423
0948.0	PF0784
0950.0	PF0351
0950.1	PF0811
0950.2	PF0812
0954.0	PF0686
0955.0	PF0687
0957.0	PF0210
0958.0	PF0688
0959.0	PF0689
0961.0	PF0211
0963.0	PF0363
0964.0	PF0690
0965.0	PF0691
0967.0	PF0693
0968.0	PF0424
0969.0	PF0694
0970.3	PF0428
0971.0	PF0695
0971.1	PF0696
0972.0	PF0697
0973.0	PF0433
0974.0	PF0698
0974.1	PF0801
0975.0	PF0337
0976.0	PF0699
0977.0	PF0700
0978.0	PF0400
0979.0	PF0701
0981.0	PF0702
0982.0	PF0703
0982.1	PF0704
0983.0	PF0705
0984.0	PF0706
0985.0	PF0707
0986.0	PF0708
0988.0	PF0710

IAM	MAGNETI MARELLI
RAICAM	
0988.1	PF0804
0989.0	PF0711
0990.0	PF0712
0991.0	PF0713
0992.0	PF0714
0993.0	PF0715
0993.1	PF0716
0994.0	PF0717
0994.1	PF0718
0996.0	PF0819
1006.0	PF0723
1007.0	PF0724
1008.0	PF0725
1010.0	PF0727
1021.0	PF0734
1022.0	PF0735
1023.0	PF0736
1025.0	PF0737
1025.1	PF0738
1027.0	PF0740
1028.0	PF0741
1028.1	PF0742
1029.0	PF0743
1031.0	PF0745
1035.0	PF0749
1036.0	PF0750
1037.0	PF0751
1039.0	PF0753
1040.0	PF0754
1042.0	PF0756
1046.0	PF0760
1052.0	PF0766
1053.0	PF0767
1065.0	PF0781
1066.0	PF0808
1067.0	PF0809
1078.0	PF0791
1096.0	PF0823
1096.1	PF0797
1096.2	PF0824
1097.0	PF0822

IAM	MAGNETI MARELLI
REMSA	
0047.30	PF0325
0101.20	PF0354
0119.10	PF0248
0134.50	PF0806
0135.00	PF0116
0141.20	PF0204
0141.32	PF0203
0143.02	PF0175
0144 06	PF0790
0144.32	PF0378
0144.32	PF0385
0144.50	PF0197
0146.14	PF0105
0147.22	PF0491
0157.00	PF0304
0157.10	PF0306
0167.04	PF0405
0170.14	PF0167
0171.00	PF0394
0171.10	PF0392
0171.20	PF0395
0171.60	PF0393
0172.00	PF0249
0172.10	PF0233
0172.12	PF0232
0172.30	PF0227
0172.32	PF0545
0172.50	PF0428
0172.52	PF0427
0179.20	PF0294
0192.12	PF0372
0192.34	PF0168
0208.00	PF0377
0208.12	PF0817
0212.42	PF0286
0214.02	PF0292
0214.22	PF0492
0224.02	PF0459
0231.00	PF0783
0232.00	PF0815
0233.52	PF0457
0233.52	PF0460
0239.00	PF0368
0239.10	PF0367
0247.10	PF0166

IAM	MAGNETI MARELLI
REMSA	
0247.14	PF0165
0263.01	PF0131
0263.02	PF0443
0263.03	PF0348
0263.10	PF0144
0263.41	PF0442
0263.51	PF0259
0265.10	PF0242
0265.15	PF0158
0265.30	PF0154
0265.32	PF0788
0265.40	PF0157
0270.25	PF0159
0281.00	PF0807
0281.10	PF0229
0281.32	PF0234
0282.10	PF0359
0282.20	PF0307
0284.00	PF0305
0285.20	PF0250
0286.50	PF0205
0293.11	PF0695
0293.18	PF0696
0303.12	PF0226
0305.02	PF0117
0305.31	PF0122
0305.44	PF0787
0312.02	PF0119
0315.04	PF0401
0315.22	PF0495
0318.06	PF0467
0318.32	PF0468
0321.02	PF0375
0321.10	PF0482
0321.22	PF0326
0325.04	PF0463
0325.32	PF0462
0325.52	PF0461
0331.00	PF0246
0331.04	PF0247
0337.02	PF0484
0343.00	PF0345
0351.02	PF0274
0354.02	PF0339
0354.22	PF0496

IAM	MAGNETI MARELLI
REMSA	
0357.22	PF0333
0372.02	PF0212
0372.02	PF0237
0381.00	PF0485
0381.20	PF0152
0381.60	PF0161
0381.70	PF0486
0383.00	PF0488
0384.40	PF0155
0384.60	PF0622
0385.10	PF0415
0385.11	PF0416
0390.00	PF0260
0390.02	PF0130
0390.10	PF0360
0390.11	PF0261
0390.20	PF0137
0390.22	PF0143
0390.32	PF0386
0390.41	PF0136
0390.50	PF0421
0390.52	PF0142
0391.00	PF0269
0391.02	PF0268
0392.02	PF0270
0393.00	PF0208
0396.00	PF0342
0402.02	PF0406
0405.02	PF0341
0407.00	PF0303
0413.04	PF0705
0414.00	PF0223
0414.01	PF0217
0414.01	PF0218
0414.20	PF0219
0414.20	PF0220
0414.21	PF0454
0414.21	PF0455
0415.12	PF0296
0415.32	PF0458
0418.02	PF0275
0419.02	PF0276
0426.02	PF0497
0427.02	PF0509
0429.04	PF0635

IAM	MAGNETI MARELLI
REMSA	
0431.10	PF0346
0432.00	PF0245
0434.01	PF0554
0434.22	PF0107
0434.30	PF0555
0435.02	PF0475
0435.12	PF0476
0436.40	PF0546
0436.41	PF0547
0438.04	PF0198
0447.20	PF0785
0461.02	PF0195
0461.10	PF0196
0462.00	PF0352
0480.00	PF0417
0480.21	PF0528
0486.02	PF0789
0486.11	PF0183
0487.02	PF0184
0487.11	PF0185
0502.22	PF0287
0578.00	PF0321
0578.00	PF0504
0579.00	PF0322
0580.00	PF0505
0580.10	PF0506
0581.10	PF0111
0582.00	PF0520
0583.00	PF0810
0586.00	PF0310
0587.00	PF0238
0587.21	PF0102
0587.22	PF0104
0588.10	PF0239
0588.20	PF0240
0588.31	PF0222
0588.31	PF0782
0589.21	PF0103
0589.22	PF0101
0589.32	PF0118
0590.02	PF0334
0590.21	PF0521
0591.00	PF0529
0591.12	PF0541
0591.20	PF0542

IAM	MAGNETI MARELLI
REMSA	
0591.30	PF0370
0592.02	PF0343
0592.12	PF0518
0596.00	PF0579
0601.00	PF0315
0602.02	PF0192
0603.04	PF0374
0604.04	PF0202
0605.02	PF0522
0605.12	PF0336
0607.02	PF0519
0609.00	PF0390
0609.10	PF0388
0609.11	PF0396
0609.20	PF0391
0614.02	PF0524
0618.00	PF0418
0618.01	PF0419
0620.20	PF0397
0624.12	PF0525
0630.00	PF0297
0631.00	PF0389
0631.10	PF0145
0631.12	PF0138
0633.00	PF0515
0633.20	PF0134
0633.21	PF0516
0633.41	PF0132
0634.00	PF0199
0634.04	PF0786
0638.02	PF0816
0640.00	PF0530
0643.00	PF0200
0643.01	PF0513
0643.01	PF0514
0643.10	PF0512
0643.20	PF0201
0645.00	PF0510
0645.02	PF0207
0645.32	PF0206
0650.00	PF0301
0650.22	PF0517
0651.00	PF0283
0651.02	PF0527
0651.10	PF0526

IAM	MAGNETI MARELLI
REMSA	
0651.22	PF0480
0651.30	PF0479
0651.86	PF0477
0660.11	PF0108
0660.22	PF0112
0666.02	PF0121
0666.10	PF0499
0666.12	PF0501
0666.14	PF0498
0666.22	PF0113
0666.32	PF0502
0666.51	PF0110
0675.02	PF0800
0676.02	PF0532
0677.00	PF0544
0678.00	PF0311
0683.02	PF0523
0684.02	PF0355
0685.22	PF0357
0691.00	PF0255
0692.00	PF0106
0693.00	PF0253
0694.02	PF0567
0694.10	PF0566
0696.00	PF0164
0699.00	PF0293
0701.00	PF0327
0702.02	PF0549
0702.12	PF0548
0702.21	PF0450
0703.02	PF0279
0704.00	PF0344
0705.02	PF0398
0708.02	PF0335
0709.10	PF0553
0710.02	PF0534
0712.02	PF0533
0713.00	PF0422
0714.00	PF0543
0717.00	PF0328
0718.00	PF0411
0718.11	PF0535
0718.20	PF0536
0720.02	PF0209
0721.01	PF0262

IAM	MAGNETI MARELLI
REMSA	
0721.02	PF0539
0724.02	PF0470
0724.11	PF0471
0726.00	PF0537
0726.10	PF0538
0727.00	PF0216
0727.10	PF0109
0727.12	PF0503
0727.20	PF0687
0727.32	PF0689
0727.52	PF0688
0733.00	PF0319
0741.02	PF0593
0742.00	PF0493
0746.12	PF0278
0747.12	PF0702
0765.00	PF0251
0766.00	PF0252
0766.12	PF0404
0767.01	PF0586
0767.10	PF0420
0767.12	PF0258
0768.00	PF0312
0769.00	PF0320
0769.02	PF0585
0770.00	PF0584
0771.12	PF0282
0771.32	PF0472
0772.02	PF0556
0772.12	PF0271
0772.22	PF0557
0774.02	PF0551
0774.12	PF0362
0775.00	PF0575
0775.01	PF0576
0776.00	PF0266
0777.00	PF0265
0777.10	PF0613
0800.12	PF0466
0800.22	PF0465
0803.02	PF0340
0803.22	PF0445
0804.12	PF0338
0813.00	PF0577
0818.00	PF0308

IAM	MAGNETI MARELLI
REMSA	
0819.00	PF0366
0820.02	PF0598
0822.12	PF0408
0827.04	PF0564
0828.04	PF0181
0829.04	PF0565
0830.00	PF0180
0833.00	PF0365
0834.01	PF0589
0834.10	PF0371
0835.02	PF0552
0839.02	PF0578
0840.20	PF0174
0840.30	PF0170
0841.00	PF0176
0842.00	PF0349
0842.20	PF0243
0842.30	PF0431
0842.40	PF0570
0843.00	PF0571
0843.10	PF0383
0846.00	PF0531
0849.00	PF0434
0849.10	PF0474
0852.14	PF0683
0857.00	PF0151
0857.10	PF0583
0857.30	PF0581
0858.01	PF0126
0858.10	PF0558
0858.11	PF0430
0858.31	PF0361
0858.32	PF0560
0859.10	PF0228
0859.11	PF0214
0859.12	PF0562
0859.21	PF0561
0860.01	PF0563
0860.02	PF0124
0861.00	PF0125
0862.00	PF0331
0862.02	PF0631
0862.12	PF0798
0862.20	PF0574
0864.00	PF0332

IAM	MAGNETI MARELLI
REMSA	
0874.02	PF0407
0875.01	PF0490
0876.01	PF0473
0876.21	PF0350
0878.00	PF0114
0879.02	PF0289
0879.12	PF0182
0879.31	PF0224
0880.00	PF0587
0881.00	PF0173
0888.00	PF0162
0888.40	PF0369
0892.00	PF0737
0892.20	PF0738
0893.02	PF0469
0897.02	PF0603
0897.11	PF0412
0951.02	PF0399
0953.02	PF0277
0954.00	PF0597
0957.02	PF0356
0959.01	PF0187
0960.01	PF0186
0961.00	PF0188
0961.02	PF0573
0962.00	PF0384
0962.10	PF0381
0962.52	PF0611
0963.10	PF0153
0964.02	PF0607
0964.12	PF0605
0964.20	PF0608
0964.32	PF0606
0964.41	PF0610
0970.02	PF0295
0971.02	PF0592
0971.12	PF0784
0976.20	PF0380
0977.00	PF0600
0978.02	PF0410
0979.00	PF0580
0984.00	PF0256
0986.00	PF0163
0986.02	PF0511
0987.00	PF0347

IAM	MAGNETI MARELLI
REMSA	
0987.02	PF0594
0987.11	PF0353
0988.00	PF0409
0990.02	PF0318
0991.00	PF0316
0991.10	PF0640
1030.01	PF0135
1030.10	PF0178
1031.00	PF0133
1031.00	PF0601
1036.02	PF0364
1038.02	PF0281
1041.02	PF0447
1042.02	PF0448
1043.00	PF0679
1044.00	PF0681
1045.11	PF0413
1045.22	PF0625
1046.02	PF0402
1047.02	PF0403
1050.02	PF0596
1051.02	PF0285
1052.00	PF0160
1052.10	PF0507
1052.30	PF0508
1053.00	PF0612
1054.02	PF0595
1068.02	PF0691
1069.00	PF0693
1081.01	PF0400
1082.00	PF0244
1095.02	PF0210
1098.14	PF0802
1099.00	PF0291
1099.01	PF0290
1100.00	PF0236
1100.11	PF0215
1101.04	PF0615
1102.04	PF0376
1103.00	PF0616
1109.02	PF0329
1109.02	PF0617
1110.02	PF0330
1111.02	PF0791
1113.00	PF0590

IAM	MAGNETI MARELLI
REMSA	
1113.10	PF0591
1113.12	PF0127
1130.00	PF0309
1131.10	PF0147
1132.00	PF0148
1133.02	PF0280
1135.02	PF0745
1136.01	PF0700
1138.00	PF0179
1139.02	PF0655
1144.00	PF0302
1145.00	PF0149
1145.10	PF0624
1149.10	PF0267
1151.00	PF0439
1177.00	PF0172
1178.00	PF0225
1179.00	PF0639
1183.01	PF0288
1183.02	PF0115
1183.12	PF0128
1196.02	PF0699
1198.00	PF0230
1201.00	PF0637
1202.00	PF0317
1205.02	PF0620
1206.02	PF0621
1208.02	PF0698
1209.02	PF0701
1215.01	PF0241
1217.00	PF0823
1219.11	PF0139
1219.21	PF0659
1224.00	PF0628
1225.02	PF0494
1226.02	PF0767
1231.00	PF0633
1232.00	PF0663
1233.00	PF0641
1234.00	PF0632
1236.00	PF0264
1237.01	PF0189
1238.00	PF0191
1241.00	PF0177
1242.01	PF0337

IAM	MAGNETI MARELLI
REMSA	
1243.00	PF0647
1245.00	PF0298
1245.02	PF0650
1245.10	PF0649
1246.00	PF0300
1247.00	PF0299
1248.00	PF0169
1248.02	PF0426
1248.10	PF0429
1249.00	PF0644
1249.01	PF0669
1249.42	PF0822
1250.00	PF0645
1250.02	PF0272
1251.02	PF0648
1252.02	PF0273
1256.00	PF0257
1258.00	PF0627
1259.02	PF0211
1275.01	PF0190
1276.01	PF0618
1277.00	PF0619
1281.02	PF0818
1282.00	PF0284
1286.02	PF0629
1292.01	PF0193
1297.00	PF0760
1299.00	PF0194
1301.00	PF0313
1302.02	PF0725
1304.00	PF0653
1304.10	PF0140
1305.00	PF0314
1310.02	PF0664
1312.00	PF0634
1318.00	PF0351
1323.00	PF0373
1332.02	PF0703
1332.12	PF0704
1341.02	PF0665
1342.00	PF0658
1343.00	PF0141
1343.10	PF0675
1343.20	PF0674
1344.00	PF0626

IAM	MAGNETI MARELLI
REMSA	
1350.00	PF0670
1350.10	PF0671
1351.00	PF0661
1351.01	PF0662
1352.00	PF0660
1356.02	PF0666
1358.02	PF0707
1362.02	PF0751
1362.42	PF0750
1375.12	PF0724
1382.00	PF0171
1384.02	PF0706
1385.02	PF0723
1386.02	PF0363
1387.00	PF0382
1388.04	PF0690
1392.00	PF0697
1395.00	PF0636
1403.02	PF0686
1407.00	PF0449
1412.32	PF0749
1418.00	PF0754
1420.00	PF0441
1431.02	PF0424
1431.12	PF0694
1432.02	PF0433
1444.01	PF0423
1448.02	PF0781
1450.02	PF0129
1461.01	PF0756
1464.08	PF0753
1471.02	PF0646
1477.00	PF0736
1485.08	PF0734
1487.08	PF0735
1488.02	PF0766
1496.00	PF0582
1507.00	PF0711
1510.10	PF0743
1513.02	PF0710
1514.00	PF0712
1515.01	PF0715
1515.01	PF0716
1516.00	PF0714
1516.10	PF0713

IAM	MAGNETI MARELLI
REMSA	
1520.02	PF0741
1521.00	PF0740
1536.02	PF0678
1538.04	PF0677
1540.00	PF0717
1540.10	PF0718
1561.02	PF0708
1569.02	PF0808
1570.02	PF0809
1589.02	PF0727
1601.01	PF0819
1811.02	PF0638
TEXTAR	
2012401	PF0488
2016801	PF0806
2026101	PF0182
2033201	PF0119
2054701	PF0208
2063402	PF0378
2063402	PF0385
2066928	PF0599
2067602	PF0130
2068701	PF0306
2068703	PF0304
2074101	PF0175
2078001	PF0815
2078401	PF0325
2083302	PF0105
2087001	PF0405
2088707	PF0394
2088708	PF0393
2088710	PF0392
2088902	PF0395
2090506	PF0372
2090604	PF0168
2090802	PF0249
2093903	PF0354
2095005	PF0212
2095005	PF0237
2096110	PF0131
2097401	PF0197
2098901	PF0167
2101203	PF0459
2105002	PF0368

IAM	MAGNETI MARELLI
TEXTAR	
2105101	PF0367
2105503	PF0305
2114001	PF0359
2114401	PF0116
2114703	PF0117
2117105	PF0246
2117902	PF0165
2118503	PF0226
2119301	PF0807
2119701	PF0307
2127501	PF0788
2127504	PF0242
2127801	PF0375
2127803	PF0482
2128201	PF0485
2130501	PF0303
2131201	PF0457
2133301	PF0491
2136301	PF0339
2136502	PF0223
2137001	PF0496
2138102	PF0555
2138103	PF0107
2138802	PF0817
2139408	PF0245
2143001	PF0195
2143602	PF0219
2143602	PF0220
2143603	PF0217
2143603	PF0218
2143603	PF0454
2143603	PF0455
2143609	PF0453
2146304	PF0203
2146306	PF0204
2146901	PF0270
2147001	PF0268
2147002	PF0269
2147902	PF0417
2147903	PF0528
2148101	PF0352
2148602	PF0579
2148703	PF0152
2151503	PF0484
2154501	PF0345

IAM	MAGNETI MARELLI
TEXTAR	
2155704	PF0122
2156201	PF0696
2157601	PF0504
2158901	PF0144
2159201	PF0505
2159201	PF0506
2160101	PF0406
2160601	PF0111
2160702	PF0154
2162402	PF0146
2162601	PF0346
2163102	PF0198
2163501	PF0415
2163702	PF0101
2165001	PF0333
2165101	PF0274
2165404	PF0286
2166201	PF0397
2166404	PF0310
2167001	PF0315
2167403	PF0202
2167901	PF0401
2168003	PF0495
2169103	PF0158
2169401	PF0275
2169701	PF0276
2171901	PF0462
2172001	PF0464
2172402	PF0374
2172501	PF0467
2172501	PF0468
2173801	PF0460
2177501	PF0635
2179701	PF0789
2179901	PF0184
2180101	PF0787
2182702	PF0196
2183301	PF0492
2184002	PF0341
2184802	PF0260
2184903	PF0261
2185701	PF0166
2186102	PF0522
2186201	PF0205
2186601	PF0391

IAM	MAGNETI MARELLI
TEXTAR	
2186602	PF0388
2186603	PF0390
2186801	PF0396
2187501	PF0497
2188302	PF0418
2188501	PF0419
2188801	PF0816
2189801	PF0553
2190003	PF0297
2190403	PF0326
2191102	PF0137
2191903	PF0311
2192001	PF0334
2192003	PF0521
2192701	PF0102
2192703	PF0238
2192901	PF0104
2193002	PF0222
2193101	PF0239
2193101	PF0240
2193201	PF0782
2193402	PF0157
2193801	PF0143
2194502	PF0389
2194503	PF0145
2194504	PF0138
2194701	PF0705
2196102	PF0509
2196201	PF0229
2197502	PF0532
2198003	PF0513
2198004	PF0200
2198004	PF0512
2198009	PF0514
2198302	PF0335
2199003	PF0159
2199901	PF0398
2300401	PF0343
2300401	PF0518
2301802	PF0142
2302001	PF0328
2302101	PF0319
2302201	PF0327
2302301	PF0519
2303401	PF0539

IAM	MAGNETI MARELLI
TEXTAR	
2304201	PF0192
2306302	PF0355
2307003	PF0301
2307005	PF0517
2307303	PF0422
2307602	PF0543
2307801	PF0584
2308001	PF0520
2309201	PF0121
2309203	PF0499
2309401	PF0567
2309501	PF0566
2309902	PF0371
2309903	PF0589
2310101	PF0250
2310301	PF0248
2310601	PF0421
2311502	PF0360
2311602	PF0386
2312401	PF0786
2313001	PF0134
2313001	PF0515
2313101	PF0132
2313101	PF0516
2313803	PF0308
2314002	PF0112
2314101	PF0108
2314401	PF0312
2315402	PF0255
2317203	PF0377
2317602	PF0416
2317703	PF0106
2317703	PF0783
2318302	PF0153
2320001	PF0251
2321502	PF0384
2321801	PF0234
2321901	PF0235
2322201	PF0103
2322416	PF0258
2322416	PF0529
2322501	PF0362
2322702	PF0232
2323401	PF0207
2323802	PF0800

IAM	MAGNETI MARELLI
TEXTAR	
2324102	PF0164
2324502	PF0383
2324802	PF0571
2325303	PF0548
2325803	PF0357
2327102	PF0320
2327301	PF0564
2327601	PF0565
2327701	PF0181
2327904	PF0266
2327904	PF0550
2328101	PF0332
2328404	PF0552
2328702	PF0155
2328902	PF0118
2329002	PF0810
2329601	PF0549
2330002	PF0247
2330201	PF0544
2330501	PF0180
2331211	PF0151
2331301	PF0150
2331303	PF0581
2332502	PF0502
2332601	PF0602
2332602	PF0412
2332603	PF0603
2333201	PF0538
2333403	PF0316
2334001	PF0410
2334602	PF0199
2334803	PF0533
2335301	PF0253
2338401	PF0287
2339201	PF0136
2339402	PF0411
2339502	PF0535
2339502	PF0536
2339602	PF0537
2339703	PF0580
2340404	PF0612
2340702	PF0173
2340902	PF0587
2341702	PF0358
2341703	PF0356

IAM	MAGNETI MARELLI
TEXTAR	
2341801	PF0262
2343401	PF0271
2343501	PF0557
2344004	PF0256
2344605	PF0541
2344704	PF0487
2346302	PF0344
2348202	PF0349
2348801	PF0342
2349002	PF0293
2349701	PF0209
2350701	PF0471
2350801	PF0470
2351002	PF0592
2351703	PF0109
2351705	PF0687
2352101	PF0593
2353601	PF0279
2354301	PF0278
2354601	PF0531
2354901	PF0336
2355001	PF0486
2355202	PF0233
2355402	PF0444
2355403	PF0259
2355406	PF0348
2355406	PF0432
2355701	PF0265
2355702	PF0613
2356901	PF0282
2357501	PF0498
2357701	PF0556
2358101	PF0575
2358102	PF0576
2358202	PF0340
2358401	PF0338
2358501	PF0577
2358701	PF0135
2358704	PF0178
2358901	PF0656
2359703	PF0201
2360001	PF0176
2360102	PF0216
2360201	PF0183
2360301	PF0185

IAM	MAGNETI MARELLI
TEXTAR	
2360406	PF0252
2360501	PF0450
2361301	PF0366
2362002	PF0403
2362303	PF0148
2364601	PF0598
2365201	PF0461
2365601	PF0578
2366201	PF0534
2366901	PF0365
2369801	PF0683
2370502	PF0123
2370502	PF0126
2370503	PF0558
2370601	PF0560
2370802	PF0214
2370803	PF0228
2370901	PF0562
2371102	PF0563
2371104	PF0124
2371401	PF0125
2371403	PF0568
2371601	PF0574
2372001	PF0691
2372301	PF0244
2372901	PF0702
2373001	PF0737
2373101	PF0738
2373201	PF0161
2373807	PF0162
2374303	PF0318
2374502	PF0585
2374601	PF0414
2374602	PF0413
2374901	PF0625
2375601	PF0501
2376001	PF0114
2376101	PF0289
2376201	PF0607
2376302	PF0609
2376601	PF0408
2376802	PF0402
2377701	PF0466
2379301	PF0160
2379401	PF0156

IAM	MAGNETI MARELLI
TEXTAR	
2380101	PF0605
2381101	PF0425
2381601	PF0407
2381701	PF0490
2382301	PF0442
2383201	PF0364
2383281	PF0523
2383601	PF0597
2384201	PF0227
2386401	PF0493
2386501	PF0399
2387101	PF0350
2387301	PF0458
2388101	PF0309
2389101	PF0277
2390101	PF0323
2391201	PF0606
2391201	PF0608
2391301	PF0610
2391401	PF0133
2391402	PF0601
2391601	PF0147
2391701	PF0186
2391901	PF0187
2392101	PF0188
2392103	PF0573
2392201	PF0639
2392301	PF0640
2392601	PF0149
2392701	PF0624
2393001	PF0380
2393401	PF0600
2393501	PF0622
2395401	PF0174
2395901	PF0172
2396001	PF0317
2396601	PF0281
2397301	PF0347
2397302	PF0353
2397401	PF0163
2397406	PF0511
2397901	PF0430
2398001	PF0370
2398101	PF0561
2398202	PF0361

IAM	MAGNETI MARELLI
TEXTAR	
2398301	PF0637
2398401	PF0619
2399002	PF0321
2399601	PF0595
2400701	PF0329
2400701	PF0617
2400801	PF0330
2401101	PF0681
2401301	PF0596
2401401	PF0285
2402201	PF0404
2402401	PF0409
2403101	PF0469
2404301	PF0331
2404501	PF0294
2404601	PF0295
2405801	PF0448
2405901	PF0472
2406201	PF0206
2407201	PF0236
2407202	PF0215
2407301	PF0291
2407303	PF0290
2407701	PF0302
2407901	PF0824
2408601	PF0621
2408701	PF0620
2409201	PF0447
2409601	PF0507
2410101	PF0170
2412201	PF0664
2412301	PF0263
2413301	PF0615
2413401	PF0376
2413501	PF0616
2413701	PF0431
2413701	PF0569
2413704	PF0821
2413781	PF0243
2414101	PF0679
2414201	PF0797
2414301	PF0554
2415001	PF0179
2415501	PF0369
2416101	PF0583

IAM	MAGNETI MARELLI
TEXTAR	
2416201	PF0590
2416202	PF0127
2417001	PF0760
2420401	PF0665
2421101	PF0443
2422901	PF0791
2423101	PF0463
2424601	PF0465
2425301	PF0314
2426001	PF0267
2427101	PF0700
2427301	PF0110
2427501	PF0280
2427601	PF0745
2427701	PF0655
2428001	PF0695
2428302	PF0254
2428303	PF0818
2428901	PF0626
2429401	PF0224
2430601	PF0313
2431001	PF0653
2431701	PF0698
2432001	PF0701
2432301	PF0638
2433201	PF0659
2433201	PF0667
2433201	PF0668
2433201	PF0669
2433601	PF0663
2433701	PF0632
2433801	PF0633
2433901	PF0115
2434001	PF0128
2434601	PF0494
2434801	PF0225
2434901	PF0230
2435001	PF0641
2435101	PF0767
2435301	PF0439
2437001	PF0802
2437201	PF0400
2439101	PF0241
2439301	PF0693
2440301	PF0594

IAM	MAGNETI MARELLI
TEXTAR	
2441201	PF0724
2441501	PF0723
2441801	PF0363
2442101	PF0690
2443501	PF0703
2445201	PF0634
2446501	PF0191
2446601	PF0190
2446701	PF0643
2446801	PF0189
2446901	PF0642
2448301	PF0658
2448401	PF0272
2448404	PF0645
2448501	PF0648
2448601	PF0273
2449601	PF0264
2450101	PF0725
2452901	PF0337
2453501	PF0381
2453601	PF0572
2453702	PF0257
2453801	PF0169
2454001	PF0177
2455001	PF0618
2455801	PF0644
2456301	PF0441
2457401	PF0631
2457801	PF0194
2458202	PF0699
2459501	PF0193
2460401	PF0211
2460601	PF0141
2461001	PF0629
2463201	PF0351
2463801	PF0799
2466001	PF0373
2466401	PF0666
2467301	PF0545
2468701	PF0591
2468801	PF0582
2469201	PF0660
2469301	PF0661
2469306	PF0662
2469701	PF0508

IAM	MAGNETI MARELLI
TEXTAR	
2470601	PF0139
2470801	PF0627
2470901	PF0670
2470901	PF0671
2471001	PF0672
2472701	PF0288
2473901	PF0322
2476501	PF0171
2477801	PF0784
2479601	PF0706
2482001	PF0382
2482201	PF0210
2484801	PF0736
2485201	PF0423
2486901	PF0734
2488301	PF0697
2488501	PF0686
2491401	PF0429
2491801	PF0636
2492201	PF0754
2493401	PF0751
2494601	PF0781
2495301	PF0785
2497901	PF0707
2500801	PF0714
2500901	PF0713
2501601	PF0630
2501901	PF0801
2503101	PF0694
2503401	PF0424
2505401	PF0798
2509501	PF0559
2509602	PF0433
2513402	PF0712
2514901	PF0449
2515601	PF0129
2518001	PF0426
2521201	PF0820
2521401	PF0675
2521402	PF0673
2521403	PF0676
2521404	PF0674
2521801	PF0570
2522001	PF0753
2522201	PF0756

IAM	MAGNETI MARELLI
TEXTAR	
2525801	PF0646
2532301	PF0428
2532601	PF0735
2533701	PF0750
2534701	PF0503
2534801	PF0766
2535701	PF0446
2541001	PF0689
2542901	PF0427
2547801	PF0623
2554001	PF0711
2556401	PF0710
2560201	PF0741
2560301	PF0740
2565201	PF0688
2567701	PF0822
2568301	PF0715
2568301	PF0716
2568801	PF0678
2569801	PF0708
2570201	PF0717
2572501	PF0677
2573601	PF0743
2573801	PF0718
2574801	PF0604
2577801	PF0473
2580301	PF0823
2900101	PF0547
2903701	PF0475
2907601	PF0524
2907601	PF0525
2910701	PF0546
2912111	PF0526
2912112	PF0283
2912113	PF0527
2912201	PF0530
2912303	PF0434
2912307	PF0474
2913901	PF0476
2915301	PF0324
2916002	PF0477
2916002	PF0479
2919001	PF0300
2919202	PF0298
2920002	PF0647

IAM	MAGNETI MARELLI
TRW	
GDB1030	**PF0817**
GDB1033	**PF0168**
GDB1040	**PF0208**
GDB1045	**PF0119**
GDB1048	**PF0806**
GDB1049	**PF0130**
GDB1052	**PF0122**
GDB1059	**PF0346**
GDB1084	**PF0269**
GDB1092	**PF0417**
GDB1099	**PF0223**
GDB1101	**PF0198**
GDB1104	**PF0195**
GDB1105	**PF0789**
GDB1106	**PF0184**
GDB1107	**PF0245**
GDB1109	**PF0242**
GDB1111	**PF0475**
GDB1113	**PF0352**
GDB1115	**PF0217**
GDB1115	**PF0218**
GDB1119	**PF0485**
GDB1121	**PF0144**
GDB1123	**PF0303**
GDB1126	**PF0339**
GDB1127	**PF0341**
GDB1143	**PF0406**
GDB1145	**PF0509**
GDB1147	**PF0111**
GDB1148	**PF0787**
GDB1154	**PF0635**
GDB1164	**PF0276**
GDB1182	**PF0705**
GDB1187	**PF0497**
GDB1189	**PF0154**
GDB1193	**PF0374**
GDB1197	**PF0520**
TEXTAR	
2921702	**PF0299**
2922901	**PF0649**
2922902	**PF0650**
2923201	**PF0284**
2923701	**PF0480**
2923701	**PF0481**

IAM	MAGNETI MARELLI
TRW	
GDB1204	**PF0260**
GDB1205	**PF0310**
GDB1212	**PF0101**
GDB1215	**PF0315**
GDB1215	**PF0321**
GDB1216	**PF0192**
GDB1217	**PF0790**
GDB1218	**PF0390**
GDB1219	**PF0393**
GDB1220	**PF0504**
GDB1221	**PF0250**
GDB1222	**PF0248**
GDB1236	**PF0785**
GDB1249	**PF0547**
GDB1258	**PF0788**
GDB1260	**PF0786**
GDB1261	**PF0579**
GDB1262	**PF0322**
GDB1263	**PF0505**
GDB1264	**PF0159**
GDB1265	**PF0158**
GDB1266	**PF0145**
GDB1270	**PF0816**
GDB1271	**PF0360**
GDB1274	**PF0388**
GDB1275	**PF0137**
GDB1276	**PF0482**
GDB1279	**PF0166**
GDB1280	**PF0397**
GDB1282	**PF0418**
GDB1283	**PF0297**
GDB1286	**PF0810**
GDB1287	**PF0515**
GDB1288	**PF0524**
GDB1289	**PF0326**
GDB1291	**PF0222**
GDB1291	**PF0782**
GDB1293	**PF0301**
GDB1295	**PF0199**
GDB1299	**PF0219**
GDB1299	**PF0220**
GDB1300	**PF0205**
GDB1305	**PF0197**
GDB1306	**PF0391**
GDB1307	**PF0143**

IAM	MAGNETI MARELLI
TRW	
GDB1312	**PF0389**
GDB1313	**PF0335**
GDB1314	**PF0336**
GDB1317	**PF0334**
GDB1321	**PF0200**
GDB1322	**PF0196**
GDB1324	**PF0542**
GDB1325	**PF0420**
GDB1326	**PF0258**
GDB1326	**PF0541**
GDB1330	**PF0131**
GDB1333	**PF0106**
GDB1337	**PF0112**
GDB1339	**PF0239**
GDB1340	**PF0234**
GDB1341	**PF0232**
GDB1342	**PF0386**
GDB1345	**PF0283**
GDB1347	**PF0229**
GDB1348	**PF0155**
GDB1349	**PF0247**
GDB1350	**PF0523**
GDB1351	**PF0355**
GDB1354	**PF0253**
GDB1356	**PF0476**
GDB1357	**PF0134**
GDB1358	**PF0255**
GDB1360	**PF0348**
GDB1361	**PF0512**
GDB1362	**PF0118**
GDB1363	**PF0113**
GDB1364	**PF0104**
GDB1365	**PF0398**
GDB1366	**PF0138**
GDB1367	**PF0528**
GDB1368	**PF0416**
GDB1369	**PF0586**
GDB1369	**PF0529**
GDB1373	**PF0327**
GDB1375	**PF0411**
GDB1376	**PF0146**
GDB1380	**PF0544**
GDB1382	**PF0240**
GDB1383	**PF0233**
GDB1384	**PF0216**

IAM	MAGNETI MARELLI
TRW	
GDB1385	**PF0537**
GDB1386	**PF0516**
GDB1387	**PF0102**
GDB1388	**PF0422**
GDB1389	**PF0543**
GDB1391	**PF0419**
GDB1392	**PF0107**
GDB1399	**PF0319**
GDB1402	**PF0514**
GDB1403	**PF0136**
GDB1405	**PF0377**
GDB1408	**PF0328**
GDB1411	**PF0551**
GDB1412	**PF0552**
GDB1414	**PF0575**
GDB1415	**PF0259**
GDB1417	**PF0443**
GDB1418	**PF0251**
GDB1419	**PF0252**
GDB1420	**PF0548**
GDB1421	**PF0553**
GDB1422	**PF0132**
GDB1423	**PF0202**
GDB1424	**PF0556**
GDB1425	**PF0183**
GDB1426	**PF0185**
GDB1430	**PF0157**
GDB1431	**PF0498**
GDB1434	**PF0266**
GDB1435	**PF0265**
GDB1440	**PF0261**
GDB1442	**PF0366**
GDB1444	**PF0108**
GDB1445	**PF0103**
GDB1447	**PF0565**
GDB1448	**PF0181**
GDB1449	**PF0564**
GDB1450	**PF0180**
GDB1454	**PF0320**
GDB1455	**PF0584**
GDB1459	**PF0539**
GDB1461	**PF0271**
GDB1465	**PF0203**
GDB1467	**PF0432**
GDB1468	**PF0383**

IAM	MAGNETI MARELLI
TRW	
GDB1470	**PF0365**
GDB1471	**PF0357**
GDB1472	**PF0576**
GDB1474	**PF0535**
GDB1475	**PF0442**
GDB1476	**PF0332**
GDB1477	**PF0574**
GDB1478	**PF0371**
GDB1479	**PF0370**
GDB1480	**PF0517**
GDB1481	**PF0308**
GDB1482	**PF0126**
GDB1483	**PF0214**
GDB1484	**PF0563**
GDB1485	**PF0125**
GDB1487	**PF0238**
GDB1488	**PF0142**
GDB1489	**PF0289**
GDB1492	**PF0162**
GDB1495	**PF0173**
GDB1496	**PF0587**
GDB1498	**PF0151**
GDB1500	**PF0201**
GDB1501	**PF0538**
GDB1502	**PF0737**
GDB1503	**PF0182**
GDB1508	**PF0603**
GDB1514	**PF0312**
GDB1515	**PF0356**
GDB1516	**PF0602**
GDB1517	**PF0186**
GDB1518	**PF0187**
GDB1521	**PF0188**
GDB1525	**PF0613**
GDB1526	**PF0580**
GDB1528	**PF0607**
GDB1530	**PF0152**
GDB1531	**PF0153**
GDB1532	**PF0256**
GDB1534	**PF0526**
GDB1535	**PF0434**
GDB1538	**PF0262**
GDB1540	**PF0384**
GDB1542	**PF0318**
GDB1543	**PF0585**

IAM	MAGNETI MARELLI
TRW	
GDB1545	**PF0311**
GDB1546	**PF0316**
GDB1550	**PF0135**
GDB1551	**PF0133**
GDB1555	**PF0625**
GDB1556	**PF0413**
GDB1557	**PF0412**
GDB1559	**PF0156**
GDB1560	**PF0161**
GDB1561	**PF0331**
GDB1565	**PF0679**
GDB1566	**PF0681**
GDB1567	**PF0612**
GDB1570	**PF0362**
GDB1571	**PF0600**
GDB1572	**PF0268**
GDB1573	**PF0270**
GDB1578	**PF0444**
GDB1579	**PF0558**
GDB1582	**PF0174**
GDB1583	**PF0244**
GDB1584	**PF0521**
GDB1586	**PF0396**
GDB1588	**PF0227**
GDB1589	**PF0236**
GDB1591	**PF0228**
GDB1593	**PF0291**
GDB1594	**PF0376**
GDB1595	**PF0615**
GDB1596	**PF0616**
GDB1597	**PF0380**
GDB1600	**PF0329**
GDB1600	**PF0617**
GDB1601	**PF0330**
GDB1604	**PF0109**
GDB1605	**PF0178**
GDB1606	**PF0590**
GDB1607	**PF0608**
GDB1608	**PF0499**
GDB1609	**PF0527**
GDB1610	**PF0479**
GDB1612	**PF0148**
GDB1613	**PF0588**
GDB1616	**PF0606**
GDB1617	**PF0605**

IAM	MAGNETI MARELLI
TRW	
GDB1620	**PF0179**
GDB1621	**PF0243**
GDB1622	**PF0601**
GDB1623	**PF0170**
GDB1624	**PF0176**
GDB1625	**PF0622**
GDB1626	**PF0149**
GDB1628	**PF0309**
GDB1629	**PF0302**
GDB1633	**PF0172**
GDB1635	**PF0204**
GDB1636	**PF0224**
GDB1638	**PF0225**
GDB1642	**PF0639**
GDB1643	**PF0640**
GDB1644	**PF0554**
GDB1645	**PF0110**
GDB1647	**PF0115**
GDB1648	**PF0121**
GDB1650	**PF0114**
GDB1654	**PF0123**
GDB1654	**PF0430**
GDB1659	**PF0609**
GDB1662	**PF0507**
GDB1665	**PF0267**
GDB1667	**PF0317**
GDB1668	**PF0364**
GDB1673	**PF0241**
GDB1681	**PF0189**
GDB1682	**PF0191**
GDB1683	**PF0263**
GDB1684	**PF0797**
GDB1685	**PF0264**
GDB1686	**PF0369**
GDB1687	**PF0381**
GDB1690	**PF0169**
GDB1691	**PF0644**
GDB1692	**PF0177**
GDB1694	**PF0481**
GDB1696	**PF0647**
GDB1697	**PF0300**
GDB1698	**PF0298**
GDB1699	**PF0299**
GDB1700	**PF0361**
GDB1701	**PF0561**

IAM	MAGNETI MARELLI
TRW	
GDB1703	**PF0190**
GDB1707	**PF0290**
GDB1712	**PF0619**
GDB1713	**PF0230**
GDB1713	**PF0618**
GDB1717	**PF0421**
GDB1719	**PF0193**
GDB1723	**PF0648**
GDB1724	**PF0272**
GDB1725	**PF0273**
GDB1726	**PF0760**
GDB1729	**PF0150**
GDB1730	**PF0487**
GDB1732	**PF0257**
GDB1736	**PF0313**
GDB1737	**PF0653**
GDB1737	**PF0654**
GDB1738	**PF0314**
GDB1740	**PF0194**
GDB1745	**PF0454**
GDB1745	**PF0455**
GDB1745	**PF0693**
GDB1746	**PF0215**
GDB1747	**PF0649**
GDB1748	**PF0284**
GDB1749	**PF0545**
GDB1760	**PF0589**
GDB1761	**PF0373**
GDB1762	**PF0659**
GDB1763	**PF0658**
GDB1765	**PF0141**
GDB1766	**PF0626**
GDB1768	**PF0140**
GDB1781	**PF0363**
GDB1782	**PF0723**
GDB1783	**PF0724**
GDB1784	**PF0690**
GDB1785	**PF0661**
GDB1786	**PF0660**
GDB1788	**PF0671**
GDB1789	**PF0429**
GDB1790	**PF0672**
GDB1791	**PF0382**
GDB1799	**PF0171**
GDB1807	**PF0657**

IAM	MAGNETI MARELLI
TRW	
GDB1809	**PF0610**
GDB1812	**PF0127**
GDB1814	**PF0139**
GDB1818	**PF0669**
GDB1819	**PF0697**
GDB1823	**PF0572**
GDB1828	**PF0754**
GDB1829	**PF0562**
GDB1831	**PF0358**
GDB1832	**PF0611**
GDB1841	**PF0441**
GDB1842	**PF0560**
GDB1843	**PF0694**
GDB1844	**PF0433**
GDB1847	**PF0424**
GDB1851	**PF0425**
GDB1854	**PF0582**
GDB1855	**PF0124**
GDB1857	**PF0738**
GDB1864	**PF0288**
GDB1866	**PF0675**
GDB1867	**PF0674**
GDB1870	**PF0147**
GDB1873	**PF0426**
GDB1880	**PF0128**
GDB1881	**PF0687**
GDB1882	**PF0508**
GDB1888	**PF0501**
GDB1893	**PF0254**
GDB1894	**PF0503**
GDB1896	**PF0670**
GDB1899	**PF0440**
GDB1900	**PF0427**
GDB1901	**PF0474**
GDB1902	**PF0676**
GDB1904	**PF0423**
GDB1905	**PF0129**
GDB1917	**PF0753**
GDB1920	**PF0736**
GDB1923	**PF0464**
GDB1929	**PF0756**
GDB1932	**PF0734**
GDB1933	**PF0735**
GDB1938	**PF0820**
GDB1941	**PF0662**

IAM	MAGNETI MARELLI
TRW	
GDB1956	**PF0715**
GDB1956	**PF0716**
GDB1957	**PF0714**
GDB1967	**PF0741**
GDB1968	**PF0740**
GDB1982	**PF0643**
GDB199	**PF0354**
GDB2018	**PF0718**
GDB294	**PF0304**
GDB297	**PF0212**
GDB308	**PF0372**
GDB3092	**PF0345**
GDB3114	**PF0343**
GDB3115	**PF0519**
GDB3160	**PF0460**
GDB3163	**PF0532**
GDB3164	**PF0492**
GDB3165	**PF0800**
GDB3168	**PF0344**
GDB3169	**PF0468**
GDB317	**PF0325**
GDB3175	**PF0462**
GDB3177	**PF0274**
GDB3180	**PF0518**
GDB3186	**PF0567**
GDB3192	**PF0296**
GDB3193	**PF0293**
GDB3195	**PF0164**
GDB3200	**PF0496**
GDB3201	**PF0279**
GDB3211	**PF0467**
GDB3214	**PF0333**
GDB3215	**PF0549**
GDB3216	**PF0206**
GDB3218	**PF0533**
GDB3220	**PF0209**
GDB3221	**PF0534**
GDB3224	**PF0287**
GDB3227	**PF0566**
GDB323	**PF0405**
GDB3236	**PF0471**
GDB3243	**PF0593**
GDB3245	**PF0458**
GDB3246	**PF0342**
GDB3247	**PF0340**

IAM	MAGNETI MARELLI
TRW	
GDB3249	**PF0598**
GDB3251	**PF0577**
GDB3262	**PF0286**
GDB3265	**PF0510**
GDB3268	**PF0702**
GDB3269	**PF0461**
GDB3279	**PF0578**
GDB328	**PF0378**
GDB328	**PF0385**
GDB3284	**PF0278**
GDB3287	**PF0338**
GDB3288	**PF0408**
GDB3289	**PF0407**
GDB3290	**PF0490**
GDB3292	**PF0349**
GDB3294	**PF0473**
GDB3297	**PF0282**
GDB3299	**PF0472**
GDB3309	**PF0465**
GDB3310	**PF0295**
GDB3311	**PF0294**
GDB3315	**PF0597**
GDB3316	**PF0493**
GDB3317	**PF0592**
GDB3324	**PF0410**
GDB3329	**PF0292**
GDB3330	**PF0163**
GDB3332	**PF0347**
GDB3334	**PF0596**
GDB3335	**PF0595**
GDB3336	**PF0402**
GDB3337	**PF0403**
GDB3341	**PF0285**
GDB3342	**PF0281**
GDB3343	**PF0447**
GDB3344	**PF0448**
GDB3347	**PF0207**
GDB3351	**PF0470**
GDB3352	**PF0277**
GDB3353	**PF0466**
GDB3354	**PF0557**
GDB3355	**PF0691**
GDB3358	**PF0791**
GDB3363	**PF0450**
GDB3364	**PF0409**

IAM	MAGNETI MARELLI
TRW	
GDB3365	**PF0695**
GDB3369	**PF0280**
GDB3370	**PF0745**
GDB3373	**PF0700**
GDB3375	**PF0275**
GDB3377	**PF0655**
GDB3378	**PF0469**
GDB3385	**PF0477**
GDB3392	**PF0683**
GDB3393	**PF0350**
GDB3396	**PF0353**
GDB3399	**PF0638**
GDB3403	**PF0439**
GDB3407	**PF0620**
GDB3408	**PF0621**
GDB3410	**PF0637**
GDB3418	**PF0767**
GDB3420	**PF0698**
GDB3421	**PF0701**
GDB3424	**PF0632**
GDB3425	**PF0663**
GDB3426	**PF0633**
GDB3428	**PF0495**
GDB3429	**PF0641**
GDB3435	**PF0337**
GDB3437	**PF0818**
GDB3438	**PF0463**
GDB3439	**PF0650**
GDB3441	**PF0573**
GDB3443	**PF0494**
GDB3445	**PF0799**
GDB3454	**PF0629**
GDB3457	**PF0404**
GDB3458	**PF0631**
GDB3460	**PF0627**
GDB3461	**PF0725**
GDB3466	**PF0802**
GDB3467	**PF0351**
GDB3469	**PF0400**
GDB3476	**PF0706**
GDB3479	**PF0665**
GDB3480	**PF0666**
GDB3481	**PF0664**
GDB3482	**PF0703**
GDB3484	**PF0634**

IAM	MAGNETI MARELLI
TRW	
GDB3493	**PF0707**
GDB3494	**PF0751**
GDB3497	**PF0636**
GDB3501	**PF0699**
GDB3511	**PF0781**
GDB3519	**PF0399**
GDB3529	**PF0646**
GDB3539	**PF0711**
GDB3546	**PF0594**
GDB3549	**PF0749**
GDB3580	**PF0677**
GDB3588	**PF0798**
GDB3598	**PF0708**
GDB371	**PF0249**
GDB4132	**PF0431**
GDB4144	**PF0211**
GDB4173	**PF0628**

IAM	MAGNETI MARELLI
TRW	
GDB4175	**PF0686**
GDB4176	**PF0210**
GDB454	**PF0392**
GDB458	**PF0105**
GDB459	**PF0394**
GDB4600	**PF0445**
GDB463	**PF0395**
GDB466	**PF0783**
GDB483	**PF0117**
GDB496	**PF0484**
GDB499	**PF0457**
GDB5062	**PF0546**
GDB695	**PF0175**
GDB736	**PF0815**
GDB788	**PF0167**
GDB791	**PF0415**
GDB797	**PF0401**

IAM	MAGNETI MARELLI
TRW	
GDB814	**PF0116**
GDB817	**PF0305**
GDB842	**PF0530**
GDB862	**PF0488**
GDB864	**PF0226**
GDB883	**PF0491**
GDB893	**PF0459**
GDB897	**PF0246**
GDB906	**PF0165**
GDB911	**PF0306**
GDB914	**PF0367**
GDB915	**PF0368**
GDB952	**PF0359**
GDB958	**PF0807**
GDB985	**PF0375**
GDB987	**PF0307**
	PF0824

Tavole di comparazione WVA
WVA cross reference guide
Gegenüberstellung WVA
Table de correspondance WVA
Tabla de equivalencias WVA
Tabela de equivalências WVA
Πίνακας αντιστοιχιών WVA
Tabela porównawcza WVA
Кросс-таблица с WVA номерами
WVA çapraz referans tablosu

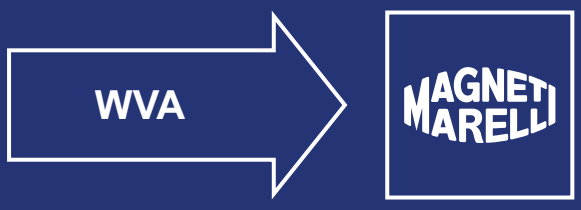

WVA	MAGNETI MARELLI	Th (mm)
20031	PF0294	13,1
20076	PF0492	15,5
20077	PF0492	15,5
20124	PF0488	19
20168	PF0806	16
20180	PF0154	17
20181	PF0154	17
20261	PF0182	19
	PF0224	19
20267	PF0182	19
20332	PF0119	17
20547	PF0208	16,5
20634	PF0378	15
	PF0385	15
20651	PF0416	18
20652	PF0415	18
20668	PF0116	16,5
20669	PF0599	17,9
20676	PF0130	19
	PF0137	19
	PF0143	19
	PF0146	19
	PF0261	19
	PF0421	19
20678	PF0130	19
20687	PF0306	15,5
20741	PF0175	19
20758	PF0304	13,5
20775	PF0212	18
	PF0237	18
20780	PF0815	13,4
20784	PF0325	18
20787	PF0175	19
20833	PF0105	17
20834	PF0105	17
20838	PF0105	17
20870	PF0405	15
20887	PF0392	19,5
	PF0393	17,3
	PF0394	15
20888	PF0392	19,5
	PF0393	17,3
	PF0394	15
20889	PF0395	17,2
20905	PF0372	18
20906	PF0168	18
20907	PF0233	18
	PF0249	18
20908	PF0232	18
	PF0249	18
20919	PF0817	18
20939	PF0354	15,6
20950	PF0212	18
	PF0237	18
20951	PF0212	18
20952	PF0212	18
20960	PF0131	17
	PF0432	16
20961	PF0144	15
	PF0259	17
	PF0348	16
	PF0443	17
20973	PF0197	11
20974	PF0197	11
	PF0790	11
20986	PF0372	18
20989	PF0167	17,5
21012	PF0459	15,5
21050	PF0368	15
21051	PF0367	15
21055	PF0305	18
21076	PF0166	17
21080	PF0167	17,5
21096	PF0378	15
21097	PF0378	15
21103	PF0783	14,3
21140	PF0359	15,5
21145	PF0166	17
21147	PF0117	19
	PF0122	19
21148	PF0117	19
21171	PF0246	18
21179	PF0165	17
21182	PF0226	19
21183	PF0226	19
21193	PF0807	17,8
21194	PF0807	17,8
21197	PF0307	15,2
21271	PF0119	17
21275	PF0242	17
	PF0788	17
21276	PF0242	17
	PF0788	17
21278	PF0375	17
21279	PF0375	17
21282	PF0152	17
	PF0485	17
	PF0487	17
21283	PF0485	17
21289	PF0165	17
21305	PF0303	15,2
21312	PF0457	13
21313	PF0457	13
21314	PF0457	13
21333	PF0491	15
21334	PF0491	15
21335	PF0491	15
21353	PF0208	16,5
21363	PF0339	15,4
	PF0496	15,4
21365	PF0223	17
21381	PF0554	15
	PF0555	15
21383	PF0122	19
21388	PF0817	18
21394	PF0245	18
21396	PF0245	18
21404	PF0204	18
21414	PF0168	18
21430	PF0195	17,2
	PF0196	17,2
21432	PF0195	17,2
21436	PF0217	17
	PF0218	17
	PF0219	17
	PF0220	17
	PF0453	17
	PF0454	17
	PF0455	17
	PF0456	17
21437	PF0217	17
	PF0218	17
21463	PF0203	18
	PF0204	18
21469	PF0270	18,1
21470	PF0268	17,9
	PF0269	17,9

WVA	MAGNETI MARELLI	Th (mm)
21479	PF0417	19
	PF0528	19
21481	PF0352	15,7
21486	PF0579	19,3
21487	PF0152	17
21515	PF0484	18
21516	PF0484	18
21517	PF0484	18
21545	PF0345	15,5
21572	PF0326	17
21576	PF0504	20,5
21577	PF0504	20,5
21592	PF0505	18,5
	PF0506	17,5
21593	PF0505	18,5
21601	PF0406	17,5
21602	PF0406	17,5
21603	PF0406	17,5
21606	PF0111	16,5
21607	PF0154	17
21621	PF0322	17
21622	PF0322	17
21624	PF0146	19
21626	PF0346	15,5
21627	PF0789	19,5
21631	PF0198	17
21635	PF0415	18
	PF0416	18
21636	PF0101	19,3
	PF0103	19,3
	PF0118	19,3
21637	PF0101	19,3
	PF0103	19,3
21642	PF0579	19,3
21644	PF0155	17,8
21650	PF0333	15
21651	PF0274	17,3
21652	PF0274	17,3
21653	PF0274	17,3
21654	PF0286	15
21655	PF0286	15
21656	PF0286	15
21662	PF0397	17,5
21664	PF0310	19,5
21670	PF0315	20
21674	PF0202	19

WVA	MAGNETI MARELLI	Th (mm)
21676	PF0160	20
21677	PF0159	20
21679	PF0495	17
21680	PF0401	15,0
	PF0495	17
21681	PF0401	15,0
21690	PF0158	17,3
21691	PF0158	17,3
21694	PF0275	17
21695	PF0275	17
21696	PF0275	17
21697	PF0276	15
21698	PF0276	15
21699	PF0276	15
21719	PF0461	14,7
	PF0462	14,7
	PF0464	14,7
21720	PF0462	14,7
	PF0464	14,7
21721	PF0462	14,7
21724	PF0374	19
21725	PF0467	17
	PF0468	17
21726	PF0467	17
	PF0468	17
21727	PF0467	17
	PF0468	17
21738	PF0460	12,7
21748	PF0529	17
21749	PF0374	19
21754	PF0296	16
21755	PF0296	16
21756	PF0296	16
21757	PF0296	16
21767	PF0153	20
21768	PF0339	15,4
21769	PF0339	15,4
21773	PF0459	15,5
21774	PF0459	15,5
21775	PF0635	15,0
21776	PF0635	15,0
21794	PF0315	20
21795	PF0310	19,5
21796	PF0334	15,5
	PF0521	17

WVA	MAGNETI MARELLI	Th (mm)
21797	PF0183	19,5
	PF0789	19,5
21798	PF0789	19,5
21799	PF0184	19,5
	PF0185	19,5
21800	PF0184	19,5
21801	PF0787	19
21802	PF0787	19
21827	PF0196	17,2
21829	PF0360	20
	PF0386	20
21831	PF0107	17,8
21833	PF0292	15,5
	PF0492	15,5
21834	PF0292	15,5
21840	PF0341	14,4
21841	PF0341	14,4
21842	PF0341	14,4
21848	PF0260	19
21849	PF0260	19
21861	PF0336	16,5
	PF0522	15
21862	PF0205	17
21866	PF0388	17
	PF0390	19,5
	PF0391	15
	PF0396	17
21868	PF0388	17
	PF0390	19,5
	PF0391	15
	PF0396	17
21875	PF0497	16
21876	PF0497	16
21877	PF0497	16
21882	PF0529	17
21883	PF0418	19,5
21884	PF0419	19,5
21885	PF0418	19,5
21886	PF0202	19
21887	PF0816	17,7
21888	PF0816	17,7
21889	PF0816	17,7
21891	PF0158	17,3
21898	PF0553	15,8
21899	PF0553	15,8
21900	PF0297	15,5

WVA	MAGNETI MARELLI	Th (mm)
21904	PF0326	17
	PF0482	17
21911	PF0136	19
	PF0137	19
21919	PF0311	14,2
21920	PF0334	15,5
	PF0521	17
21927	PF0102	17,8
	PF0104	17,8
	PF0238	17,8
21928	PF0102	17,8
	PF0238	17,8
21929	PF0102	17,8
	PF0104	17,8
21930	PF0222	18
	PF0239	18
	PF0240	18
	PF0782	18
21931	PF0222	18
	PF0240	18
21932	PF0222	18
	PF0782	18
21933	PF0157	17,3
21934	PF0157	17,3
21935	PF0157	17,3
21938	PF0143	19
21939	PF0143	19
21945	PF0138	19,5
	PF0145	19,4
	PF0389	16
21947	PF0705	15,3
21961	PF0509	15,5
21962	PF0229	17,8
21974	PF0132	19,5
	PF0515	19,5
	PF0516	19,5
21975	PF0532	18,2
21976	PF0532	18,2
21977	PF0532	18,2
21980	PF0200	18
	PF0513	18
	PF0514	18
21981	PF0200	18
	PF0514	18
21982	PF0334	15,5
	PF0521	17

WVA	MAGNETI MARELLI	Th (mm)
21983	PF0335	17,3
21990	PF0159	20
21998	PF0398	15,5
21999	PF0398	15,5
23002	PF0398	15,5
23003	PF0192	19
23004	PF0343	16
	PF0518	16
23005	PF0343	16
23006	PF0343	16
23007	PF0142	19,5
23018	PF0142	19,5
23019	PF0142	19,5
23020	PF0328	17,8
23021	PF0319	18,8
23022	PF0327	20,8
23023	PF0519	14,5
23024	PF0519	14,5
23025	PF0519	14,5
23034	PF0262	19
	PF0539	19
	PF0540	19
23035	PF0539	19
23036	PF0539	19
23040	PF0192	19
23041	PF0192	19
23042	PF0192	19
23043	PF0785	17
23044	PF0785	17
23045	PF0320	17,2
23057	PF0523	19,5
23058	PF0523	19,5
23059	PF0523	19,5
23063	PF0355	17
23064	PF0355	17
23066	PF0355	17
23067	PF0355	17
23070	PF0301	17
23072	PF0422	18,5
23073	PF0422	18,5
23074	PF0422	18,5
23076	PF0543	17
23077	PF0543	17
23078	PF0584	16
23080	PF0520	15,5
23091	PF0368	15

WVA	MAGNETI MARELLI	Th (mm)
23092	PF0110	15,8
	PF0113	15,8
	PF0121	15,8
	PF0498	15,8
	PF0499	15,8
23093	PF0344	16,5
23094	PF0566	17,2
	PF0567	17,2
23095	PF0566	17,2
	PF0567	17,2
23098	PF0371	18,2
23099	PF0371	18,2
	PF0589	18,2
23100	PF0589	18,2
23101	PF0250	17,5
23102	PF0250	17,5
23103	PF0248	18
23104	PF0248	18
23106	PF0421	19
23107	PF0421	19
23110	PF0113	15,8
23111	PF0113	15,8
23115	PF0360	20
23116	PF0386	20
23117	PF0386	20
23124	PF0786	19
23125	PF0786	19
23130	PF0134	19,5
23131	PF0132	19,5
	PF0134	19,5
	PF0516	19,5
23138	PF0308	14,3
23140	PF0108	19
	PF0112	19
23141	PF0108	19
	PF0112	19
23144	PF0312	19,5
23145	PF0312	19,5
23154	PF0255	18,5
23155	PF0255	18,5
23158	PF0484	18
23162	PF0419	19,5
23163	PF0419	19,5
23172	PF0377	18
23173	PF0377	18
23176	PF0416	18

WVA	MAGNETI MARELLI	Th (mm)
23177	PF0106	14,2
23181	PF0239	18
23183	PF0153	20
23187	PF0132	19,5
	PF0516	19,5
23200	PF0251	18,6
23201	PF0251	18,6
23202	PF0252	18,6
23203	PF0252	18,6
23205	PF0512	18
23206	PF0107	17,8
23207	PF0107	17,8
23215	PF0381	18,0
	PF0384	18,0
23216	PF0381	18,0
	PF0384	18,0
23217	PF0384	18,0
23218	PF0234	17,8
	PF0235	17,8
23219	PF0235	17,8
23220	PF0234	17,8
23222	PF0118	19,3
23224	PF0258	16,8
	PF0420	16,8
	PF0586	16,2
23225	PF0362	17
	PF0551	17
23226	PF0551	17
23234	PF0207	17
	PF0510	17
23235	PF0207	17
23236	PF0207	17
23238	PF0800	16
23239	PF0800	16
23240	PF0800	16
23241	PF0164	16
23245	PF0383	18,2
	PF0571	18,2
	PF0572	18,2
23247	PF0383	18,2
23248	PF0571	18,2
23253	PF0548	16
23254	PF0548	16
23257	PF0548	16
23260	PF0357	16,5
23261	PF0357	16,5
23264	PF0357	16,5
23265	PF0357	16,5
23271	PF0320	17,2
	PF0585	17,2
23272	PF0564	17,8
23273	PF0564	17,8
23274	PF0181	17,8
23275	PF0565	17,5
23276	PF0565	17,5
23277	PF0181	17,8
23279	PF0266	18,5
	PF0550	18,5
23281	PF0332	18,3
23282	PF0332	18,3
23284	PF0552	14
23287	PF0155	17,8
23288	PF0155	17,8
23289	PF0118	19,3
23290	PF0810	15,7
23296	PF0549	15,5
23297	PF0549	15,5
23298	PF0549	15,5
23299	PF0549	15,5
23300	PF0247	18
23301	PF0247	18
23302	PF0544	18
23305	PF0180	14,8
23311	PF0151	20,2
23312	PF0151	20,2
23313	PF0150	20,2
23322	PF0550	18,5
23325	PF0502	16,1
23326	PF0603	17,5
23332	PF0538	18
23333	PF0538	18
23334	PF0316	16,5
23335	PF0316	16,5
23340	PF0410	16,7
23341	PF0410	16,7
23342	PF0410	16,7
23343	PF0460	12,7
23344	PF0460	12,7
23346	PF0199	19
23347	PF0151	20,2
	PF0583	20,2
23348	PF0533	16,5
23349	PF0533	16,5
23350	PF0533	16,5
23353	PF0253	14,5
23384	PF0287	17,5
23385	PF0287	17,5
23386	PF0287	17,5
23391	PF0442	17
23392	PF0136	19
23393	PF0138	19,5
23394	PF0411	14,3
	PF0535	14,3
	PF0536	14,3
23395	PF0411	14,3
	PF0535	14,3
	PF0536	14,3
23396	PF0537	17,8
23397	PF0580	19
23398	PF0579	19,3
23399	PF0580	19
23402	PF0162	20,2
23403	PF0162	20,2
23404	PF0612	20,2
23405	PF0612	20,2
23406	PF0173	19
23407	PF0173	19
23408	PF0587	19,3
23409	PF0587	19,3
23416	PF0358	15
23417	PF0356	15
	PF0358	15
23418	PF0262	19
	PF0540	19
23419	PF0262	19
	PF0540	19
23434	PF0271	18,4
	PF0557	18,4
23435	PF0271	18,4
	PF0557	18,4
23437	PF0557	18,4
23440	PF0256	17,6
23441	PF0256	17,6
23445	PF0528	19
23446	PF0258	16,8
	PF0586	16,2
23447	PF0161	17
	PF0487	17

WVA	MAGNETI MARELLI	Th (mm)
23463	PF0344	16,5
23467	PF0413	17,9
23469	PF0413	17,9
23474	PF0153	20
23479	PF0402	18,7
23480	PF0402	18,7
23482	PF0243	16,4
	PF0349	16,4
	PF0569	16,4
	PF0570	16,4
	PF0821	15,3
23483	PF0349	16,4
23488	PF0342	16,6
23490	PF0293	15,5
23497	PF0209	15,3
23498	PF0209	15,3
23507	PF0470	16
	PF0471	16
23508	PF0470	16
	PF0471	16
23509	PF0471	16
23510	PF0592	16,5
23511	PF0592	16,5
23512	PF0592	16,5
23516	PF0259	17
23517	PF0109	16,5
23521	PF0593	14
23522	PF0593	14
23523	PF0593	14
23526	PF0493	17,5
23536	PF0279	16,5
23537	PF0279	16,5
23538	PF0279	16,5
23543	PF0278	15
23544	PF0278	15
23545	PF0278	15
23546	PF0531	16,5
23547	PF0531	16,5
23550	PF0486	17
23551	PF0486	17
23552	PF0227	18
	PF0233	18
23553	PF0442	17
23554	PF0131	17
23556	PF0442	17
	PF0444	17
23557	PF0265	16,8
23563	PF0567	17,2
23564	PF0493	17,5
	PF0567	17,2
23569	PF0282	17
23570	PF0282	17
23571	PF0282	17
23575	PF0498	15,8
	PF0500	15,2
23576	PF0498	15,8
	PF0500	15,2
23577	PF0556	18,4
23578	PF0556	18,4
23580	PF0556	18,4
23581	PF0575	18,8
	PF0576	18,8
23582	PF0340	15,4
	PF0445	15,4
23583	PF0340	15,4
23584	PF0338	15,6
23585	PF0577	17,5
23586	PF0577	17,5
23587	PF0135	20,1
23588	PF0135	20,1
23589	PF0135	20,1
	PF0178	18,8
23597	PF0201	18
23598	PF0201	18
23599	PF0170	19
23600	PF0176	19
23601	PF0216	13,7
	PF0503	13,7
23602	PF0183	19,5
23603	PF0185	19,5
23604	PF0252	18,6
23605	PF0450	15,7
23606	PF0450	15,7
23607	PF0450	15,7
23613	PF0366	17,8
23620	PF0403	16,3
23621	PF0403	16,3
23622	PF0403	16,3
23623	PF0148	17,2
23624	PF0148	17,2
23646	PF0598	16,5
23647	PF0598	16,5
23648	PF0598	16,5
23652	PF0461	14,7
23653	PF0461	14,7
23654	PF0356	15
23655	PF0356	15
23656	PF0578	14
23657	PF0578	14
23658	PF0578	14
23661	PF0216	13,7
23662	PF0534	15
23669	PF0365	16,8
23698	PF0683	18
23705	PF0126	18
	PF0558	18
	PF0560	18
23706	PF0126	18
23707	PF0126	18
	PF0361	18
	PF0560	18
23708	PF0214	19
	PF0221	19
	PF0228	19
23709	PF0214	19
23710	PF0214	19
	PF0221	19
	PF0228	19
	PF0561	19
	PF0562	19
23711	PF0124	19
	PF0563	19
23712	PF0563	19
23713	PF0124	19
	PF0563	19
23714	PF0125	16,4
	PF0568	17,4
23716	PF0331	16,1
	PF0574	16,1
23717	PF0574	16,1
23719	PF0691	17,2
23720	PF0691	17,2
23721	PF0691	17,2
23723	PF0244	18,2
23724	PF0244	18,2
23729	PF0702	16,4
23730	PF0737	16,8

WVA	MAGNETI MARELLI	Th (mm)
23731	PF0737	16,8
	PF0738	16,8
23732	PF0161	17
23738	PF0162	20,2
	PF0369	20,2
23743	PF0318	20
23744	PF0318	20
23745	PF0585	17,2
23746	PF0414	17,9
	PF0625	17,9
23747	PF0413	17,9
	PF0414	17,9
	PF0625	17,9
23749	PF0414	17,9
	PF0625	17,9
23752	PF0396	17
23756	PF0501	15,8
23757	PF0501	15,8
23760	PF0114	17,8
	PF0425	17,8
	PF0803	17,8
23761	PF0289	18,9
23762	PF0607	20
23763	PF0609	20
23766	PF0408	17,5
23767	PF0408	17,5
23768	PF0402	18,7
23777	PF0466	16,1
23778	PF0466	16,1
23779	PF0466	16,1
23794	PF0156	20
	PF0160	20
	PF0507	20
	PF0508	20
23801	PF0605	20
	PF0606	20
	PF0608	18,5
	PF0609	20
	PF0610	20
	PF0611	18,5
23805	PF0588	20,2
23816	PF0407	15,8
23817	PF0490	17
23818	PF0408	17,5
23819	PF0408	17,5
23823	PF0442	17
23824	PF0536	14,3
23832	PF0364	20,5
23833	PF0364	20,5
23836	PF0597	17
23840	PF0271	18,4
23841	PF0271	18,4
23842	PF0227	18
23843	PF0576	18,8
23844	PF0364	20,5
23858	PF0187	19,3
23859	PF0186	19,3
23860	PF0188	20
23865	PF0399	17,5
23866	PF0399	17,5
23867	PF0399	17,5
23871	PF0473	13,7
23872	PF0473	13,7
23873	PF0458	16,5
23874	PF0458	16,5
23875	PF0458	16,5
23881	PF0309	20
23882	PF0412	17,5
	PF0602	17,5
23891	PF0277	17,6
23892	PF0277	17,6
23893	PF0277	17,6
23901	PF0323	18,5
23902	PF0323	18,5
23903	PF0517	19,5
23904	PF0592	16,5
23912	PF0606	20
	PF0608	18,5
	PF0610	20
	PF0611	18,5
23913	PF0605	20
	PF0610	20
23914	PF0133	17
	PF0601	16,7
23915	PF0147	17,8
23916	PF0147	17,8
23917	PF0186	19,3
23918	PF0186	19,3
23919	PF0187	19,3
23920	PF0187	19,3
23921	PF0188	20
	PF0573	20
23922	PF0639	20,1
23923	PF0640	17,6
23924	PF0640	17,6
23925	PF0639	20,1
23926	PF0149	17,3
23927	PF0149	17,3
	PF0624	17,3
23930	PF0380	18,1
23934	PF0600	18,3
23935	PF0622	17,8
23954	PF0174	19
23958	PF0410	16,7
23959	PF0172	17,6
23960	PF0317	17,6
23966	PF0281	16,4
23968	PF0160	20
23973	PF0347	17
	PF0353	17
	PF0594	17
23974	PF0163	17,8
	PF0511	17,8
23977	PF0622	17,8
23979	PF0430	18
23980	PF0370	17
	PF0541	16,2
	PF0542	16,2
23981	PF0562	19
23982	PF0123	18
	PF0361	18
	PF0430	18
	PF0559	18
23983	PF0637	17,8
23984	PF0619	18
23985	PF0619	18
23987	PF0281	16,4
23988	PF0281	16,4
23990	PF0321	20,5
23991	PF0321	20,5
23993	PF0448	15,8
23996	PF0595	18,3
23997	PF0448	15,8
23998	PF0595	18,3
23999	PF0622	17,8
24007	PF0329	20,6
	PF0617	20,6
24008	PF0330	18,3

WVA	MAGNETI MARELLI	Th (mm)
24009	PF0595	18,3
24011	PF0681	18,6
24012	PF0681	18,6
24013	PF0596	15,5
24014	PF0285	15,5
24015	PF0285	15,5
24020	PF0596	15,5
24022	PF0404	17,5
24023	PF0404	17,5
24024	PF0409	17
24025	PF0409	17
24026	PF0409	17
24031	PF0469	17,8
24032	PF0469	17,8
24033	PF0469	17,8
24034	PF0490	17
24035	PF0490	17
24043	PF0331	16,1
24045	PF0294	13,1
24046	PF0295	18,5
24047	PF0295	18,5
24048	PF0295	18,5
24058	PF0448	15,8
24059	PF0472	15,8
24060	PF0472	15,8
24061	PF0472	15,8
24062	PF0206	17
24063	PF0206	17
24064	PF0206	17
24065	PF0380	18,1
24066	PF0342	16,6
24072	PF0215	17,5
	PF0236	17,5
24073	PF0290	16,5
	PF0291	16,5
24077	PF0302	19
24079	PF0797	19,8
	PF0823	18,8
24080	PF0823	18,8
24084	PF0667	18
	PF0668	18
	PF0669	18
24086	PF0621	15,7
24087	PF0620	17,5
24088	PF0473	13,7
24090	PF0702	16,4
24091	PF0702	16,4
24092	PF0447	17,3
24096	PF0507	20
24101	PF0170	19
24123	PF0263	19,2
24124	PF0263	19,2
24133	PF0615	18,3
24134	PF0376	19,4
24135	PF0616	18
24136	PF0243	16,4
24137	PF0243	16,4
	PF0821	15,3
24141	PF0679	19
24142	PF0679	19
24143	PF0554	15
24150	PF0179	17,6
24153	PF0178	18,8
24155	PF0369	20,2
24161	PF0583	20,2
24162	PF0127	15,1
	PF0590	15,1
	PF0591	15,1
24170	PF0760	19,7
24171	PF0760	19,7
24174	PF0615	18,3
24175	PF0376	19,4
24178	PF0447	17,3
24179	PF0447	17,3
24193	PF0507	20
24204	PF0665	19
24208	PF0653	19
	PF0654	19
24211	PF0443	17
24213	PF0691	17,2
24226	PF0624	17,3
24229	PF0791	15,3
24230	PF0791	15,3
24231	PF0463	14,7
24232	PF0463	14,7
24233	PF0463	14,7
24247	PF0465	17,1
24248	PF0465	17,1
24249	PF0465	17,1
24253	PF0314	17,9
24254	PF0314	17,9
24255	PF0150	20,2
24260	PF0267	16,3
24264	PF0140	19
24265	PF0140	19
24271	PF0700	14
24272	PF0700	14
24273	PF0110	15,8
	PF0121	15,8
24274	PF0121	15,8
24275	PF0280	16,8
24276	PF0745	14,8
24277	PF0655	16
24280	PF0695	16,8
24281	PF0695	16,8
	PF0696	16,8
24282	PF0695	16,8
	PF0696	16,8
24283	PF0254	16,5
	PF0684	16,5
	PF0818	15,5
24284	PF0684	16,5
	PF0818	15,5
24285	PF0818	15,5
24288	PF0361	18
	PF0559	18
24289	PF0626	17,2
24290	PF0626	17,2
24306	PF0313	20,6
24310	PF0653	19
	PF0654	19
24311	PF0653	19
	PF0654	19
24317	PF0698	17,5
24318	PF0698	17,5
24319	PF0698	17,5
24320	PF0701	14,9
24321	PF0701	14,9
24322	PF0701	14,9
24323	PF0638	15,5
24324	PF0638	15,5
24325	PF0638	15,5
24332	PF0659	19,5
	PF0667	18
	PF0668	18
	PF0669	18
24333	PF0659	19,5
24334	PF0659	19,5

WVA	MAGNETI MARELLI	Th (mm)
24336	PF0663	17,5
24337	PF0632	17,5
24338	PF0633	15,4
24339	PF0115	20,2
	PF0128	20,2
24340	PF0115	20,2
24346	PF0494	17
24348	PF0225	16,8
24349	PF0230	17,2
24351	PF0767	17
24353	PF0439	14
24354	PF0439	14
24370	PF0802	17
24372	PF0400	16,8
24387	PF0703	14,7
24388	PF0464	14,7
24391	PF0241	16
24392	PF0241	16
24393	PF0693	17,8
24397	PF0655	16
24398	PF0655	16
24403	PF0353	17
	PF0594	17
24405	PF0620	17,5
24406	PF0620	17,5
24410	PF0280	16,8
24411	PF0280	16,8
24412	PF0724	18,8
24413	PF0724	18,8
24414	PF0724	18,8
24415	PF0723	19
24416	PF0723	19
24417	PF0723	19
24418	PF0363	17
24419	PF0363	17
24420	PF0363	17
24421	PF0690	17,2
24422	PF0690	17,2
24435	PF0703	14,7
24451	PF0628	17
24452	PF0634	17,5
24453	PF0350	14,2
24456	PF0653	19
	PF0654	19
24465	PF0191	19
24466	PF0190	19
	PF0643	19
24467	PF0190	19
	PF0643	19
24468	PF0189	19,2
	PF0642	19,2
24469	PF0189	19,2
	PF0642	19,2
24479	PF0745	14,8
24480	PF0745	14,8
24483	PF0658	17
24484	PF0272	18,7
	PF0645	18,7
24485	PF0648	18,9
24486	PF0273	17,3
24496	PF0264	16,8
24497	PF0683	18
24501	PF0725	17,6
24502	PF0725	17,6
24503	PF0725	17,6
24518	PF0621	15,7
24519	PF0621	15,7
24521	PF0824	18,8
24529	PF0337	16
24530	PF0337	16
24535	PF0381	18,0
24537	PF0257	15,8
24538	PF0169	19,0
	PF0426	19
24539	PF0169	19,0
24540	PF0177	16,4
24541	PF0711	14,4
24549	PF0562	19
24550	PF0618	19
24551	PF0618	19
24557	PF0644	18,2
24558	PF0644	18,2
24563	PF0441	17,5
24568	PF0767	17
24574	PF0631	14,5
	PF0798	14,5
24575	PF0631	14,5
24576	PF0631	14,5
24578	PF0194	16,7
24582	PF0699	16,4
24589	PF0573	20
24590	PF0664	19,2
24591	PF0664	19,2
24593	PF0802	17
24594	PF0802	17
24604	PF0211	18
24605	PF0211	18
24606	PF0141	17,5
	PF0673	17,5
	PF0674	17,5
	PF0675	17,5
	PF0676	17,5
24608	PF0193	18,3
24610	PF0629	14,8
24611	PF0629	14,8
24612	PF0629	14,8
24629	PF0699	16,4
24630	PF0699	16,4
24632	PF0351	17
24638	PF0799	19
24639	PF0799	19
24640	PF0799	19
24660	PF0373	18
24661	PF0703	14,7
24662	PF0703	14,7
24664	PF0666	16,1
24665	PF0666	16,1
24666	PF0666	16,1
24669	PF0665	19
24673	PF0545	17,5
24674	PF0545	17,5
24687	PF0127	15,1
	PF0591	15,1
24689	PF0581	20,2
24690	PF0665	19
24691	PF0665	19
24692	PF0660	16
24693	PF0661	18,6
	PF0662	18,6
24695	PF0738	16,8
24696	PF0656	18,8
	PF0657	20,1
24697	PF0508	20
24705	PF0139	19,5
24706	PF0139	19,5
24707	PF0139	19,5
24708	PF0627	17,5

WVA	MAGNETI MARELLI	Th (mm)
24709	PF0670	18
	PF0671	18
24710	PF0670	18
	PF0672	18
24720	PF0423	15,5
24727	PF0288	20
24728	PF0288	20
24729	PF0288	20
24737	PF0179	17,6
24765	PF0171	16,7
24778	PF0784	16,6
24779	PF0784	16,6
24780	PF0784	16,6
24781	PF0784	16,6
24788	PF0425	17,8
24796	PF0706	17,7
24797	PF0706	17,7
24798	PF0706	17,7
24820	PF0382	16
24821	PF0211	18
24822	PF0210	17
24823	PF0210	17
24824	PF0210	17
24826	PF0672	18
24848	PF0736	18,4
24852	PF0423	15,5
24853	PF0423	15,5
24869	PF0734	19,3
24870	PF0671	18
24883	PF0697	18,5
24885	PF0686	16,5
24886	PF0686	16,5
24887	PF0686	16,5
24914	PF0429	17,9
24918	PF0636	15
24922	PF0754	17,3
24923	PF0751	15,5
24934	PF0751	15,5
24935	PF0751	15,5
24936	PF0751	15,5
24946	PF0781	19
24947	PF0781	19
24948	PF0781	19
24979	PF0707	15,8
24980	PF0707	15,8
24981	PF0707	15,8
25008	PF0714	16
25009	PF0713	16
25010	PF0714	16
25011	PF0713	16
25016	PF0630	14,3
25017	PF0630	14,3
25018	PF0630	14,3
25019	PF0801	17,5
25020	PF0801	17,5
25023	PF0801	17,5
25031	PF0694	18,8
25032	PF0694	18,8
25033	PF0694	18,8
25034	PF0424	18,8
25035	PF0424	18,8
25036	PF0424	18,8
25054	PF0798	14,5
25055	PF0798	14,5
25083	PF0823	18,8
25086	PF0715	20,3
	PF0716	20,3
25096	PF0433	16,2
25097	PF0433	16,2
25098	PF0433	16,2
25134	PF0712	17,6
25135	PF0712	17,6
25149	PF0449	17,4
25150	PF0449	17,4
25151	PF0449	17,4
25156	PF0129	17
25157	PF0129	17
25180	PF0426	19
25212	PF0431	16,4
	PF0796	15,3
	PF0820	16,4
25213	PF0431	16,4
	PF0796	15,3
	PF0820	16,4
25214	PF0673	17,5
	PF0674	17,5
	PF0675	17,5
	PF0676	17,5
25218	PF0570	16,4
25220	PF0753	18,5
25221	PF0753	18,5
25222	PF0756	17,3
25223	PF0756	17,3
25225	PF0591	15,1
25237	PF0687	17,2
25239	PF0128	20,2
25258	PF0646	14,3
25259	PF0646	14,3
25260	PF0646	14,3
25261	PF0594	17
25282	PF0314	17,9
25295	PF0511	17,8
25296	PF0511	17,8
25323	PF0427	17,4
	PF0428	17,4
	PF0440	17,4
25324	PF0428	17,4
25326	PF0735	19,3
25337	PF0750	15,7
25338	PF0750	15,7
25339	PF0750	15,7
25347	PF0503	13,7
25348	PF0766	17,8
25349	PF0766	17,8
25350	PF0766	17,8
25357	PF0446	17,2
25410	PF0689	14,3
25411	PF0689	14,3
25412	PF0689	14,3
25429	PF0427	17,4
	PF0440	17,4
25430	PF0427	17,4
	PF0440	17,4
25435	PF0428	17,4
25436	PF0582	20,2
25437	PF0582	20,2
25451	PF0446	17,2
25478	PF0623	16,8
25479	PF0623	16,8
25540	PF0711	14,4
25564	PF0710	15,8
	PF0804	21
25602	PF0741	17
	PF0742	17
25603	PF0740	17,8
25604	PF0740	17,8
25652	PF0688	17
25653	PF0688	17

WVA	MAGNETI MARELLI	Th (mm)
25654	**PF0688**	17
25677	**PF0822**	15,4
25678	**PF0822**	15,4
25679	**PF0822**	15,4
25688	**PF0678**	14,3
25689	**PF0678**	14,3
25690	**PF0678**	14,3
25692	**PF0749**	17,5
25693	**PF0749**	17,5
25694	**PF0749**	17,5
25698	**PF0708**	18,7
25699	**PF0708**	18,7
25700	**PF0708**	18,7
25702	**PF0717**	18,1
25703	**PF0717**	18,1
25725	**PF0677**	15,5
25728	**PF0718**	18,1
25733	**PF0794**	17,2
	PF0805	16,9
25734	**PF0794**	17,2
	PF0805	16,9

WVA	MAGNETI MARELLI	Th (mm)
25735	**PF0794**	17,2
	PF0805	16,9
25736	**PF0743**	17,4
25737	**PF0743**	17,4
25738	**PF0718**	18,1
25748	**PF0604**	18
25875	**PF0808**	15,8
25876	**PF0808**	15,8
25877	**PF0808**	15,8
25878	**PF0809**	13,8
25879	**PF0809**	13,8
25880	**PF0809**	13,8
25979	**PF0727**	15,7
29001	**PF0546**	20
	PF0547	20
29003	**PF0547**	20
29038	**PF0475**	18,3
29076	**PF0524**	20
	PF0525	20
29121	**PF0283**	20
	PF0526	17
	PF0527	20

WVA	MAGNETI MARELLI	Th (mm)
29122	**PF0530**	22
29123	**PF0434**	20
	PF0474	20
29139	**PF0476**	18,3
29153	**PF0324**	20
29160	**PF0477**	20
	PF0478	20
	PF0479	20
	PF0480	20,6
	PF0481	20,6
29161	**PF0480**	20,6
29190	**PF0300**	20
29192	**PF0298**	20,9
29200	**PF0647**	20,6
29217	**PF0299**	20,5
29229	**PF0649**	20
	PF0650	20
29230	**PF0650**	20
29232	**PF0284**	20,7
29237	**PF0480**	20,6
29260	**PF0479**	20
29374	**PF0530**	22

Stampa: G. Canale & C. S.p.A. - Borgaro Torinese (TO)

ITALY
Viale Aldo Borletti, 61/63
20011 Corbetta (Milano)
Tel. +39 02 928 15 111 • Fax +39 02 97227234

Export
Viale Aldo Borletti, 61/63
20011 Corbetta (Milano) Italy
Tel. +39/02/97227618 • Fax +39/02/97227755

SPAIN
Polígono Industrial G-2 Collsabadell
Ronda de Collsabadell, 1-3
08450, Llinars del Vallès, BCN
Tel. +34/93/8413530 • Fax +34/93/8427257

FRANCE
Z.A. Trappes Elancourt
5-7 rue Albert Einstein - 78190 Trappes
tel +33 (0)1 3016 6960 • Fax +33 (0)1 3016 6961

GERMANY
Salzstrasse 185/1
74076 Heilbronn
Tel. +49/7131/2910 • Fax +49/7131/165236

POLAND
Plac pod Lipami 5
40-476 Katowice
Tel. +48/32/6036107 • Fax +48/32/6036108

RUSSIA
3-j pr. Perowa Polia 8, buildg.11, office 301
111141 Moscow, Russia
Tel: + 7 495 646 24 38

BRAZIL
Rua Manoel da Nóbrega, 350
09380-120 Mauá-São Paulo
Tel. +55/11/2144-1717 • Fax +55/11/2144-1688

ARGENTINA
R. Andonaegui 1035
(C1427BEC) Capital Federal-Buenos Aires
Tel. +54/11/45236612 • Fax +54/11/45236613

CHINA
Building No 5, 88 MaJi Road, Waigaoqiao Free Trade Zone,
200131 Pudong Shanghai
Tel. +86/21/58696966-6852 • Fax +86/21/58696907

TURKEY
Büyükdere Cad. Tofaş Han No.145
Zincirlikuyu, 34394 Istanbul-Turkey
Ph: +90 212 217 02 97 • Fax: +90 212 217 02 95

8 435034 948073
05-15 099995881503 Copyright Magneti Marelli After Market Parts and Services S.p.A. 2015

Magneti Marelli After Market Parts and Services S.p.A.
Viale Aldo Borletti, 61/63 - 20011 Corbetta (Milano) Italia - Tel. +39 02 928 15 111 - Fax +39 02 972 27 234
www.magnetimarelli-checkstar.com